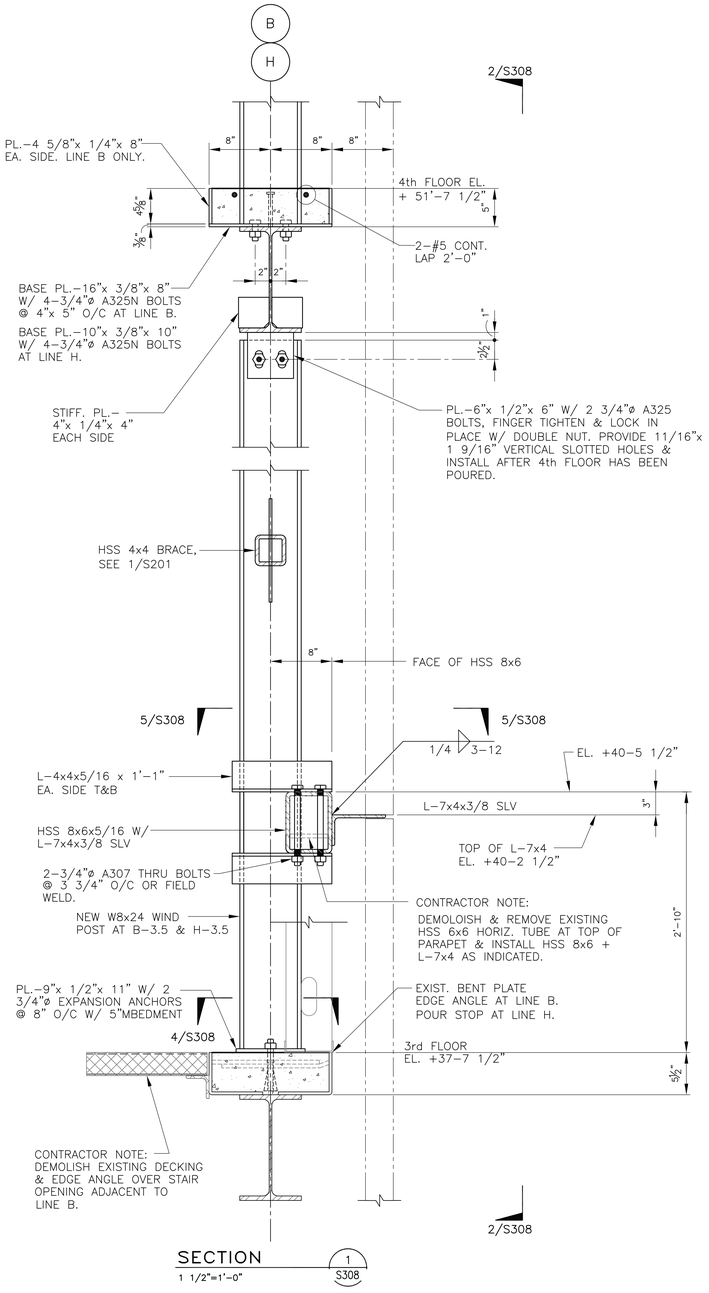

SECTION 1/S308
1 1/2"=1'-0"

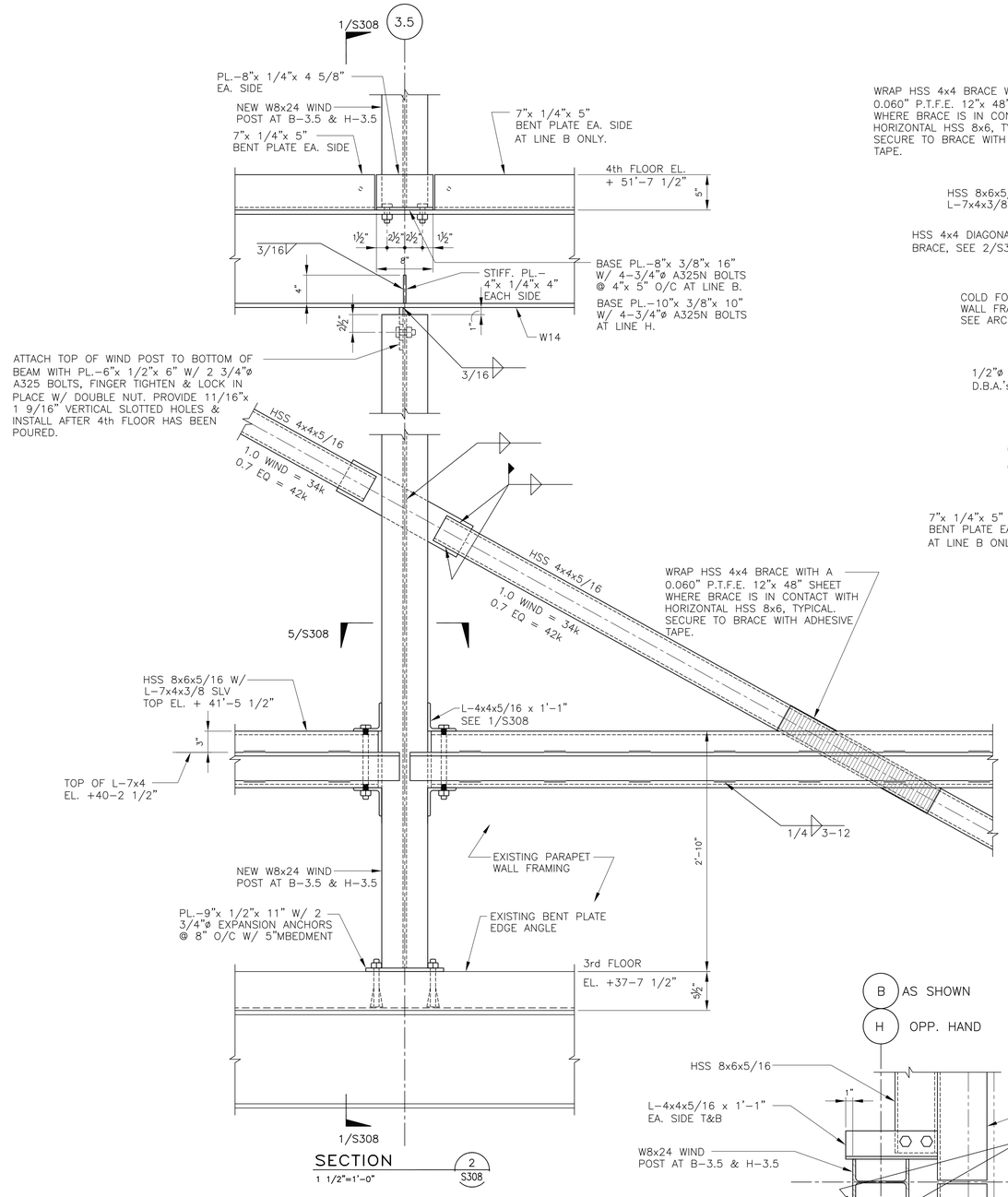

SECTION 2/S308
1 1/2"=1'-0"

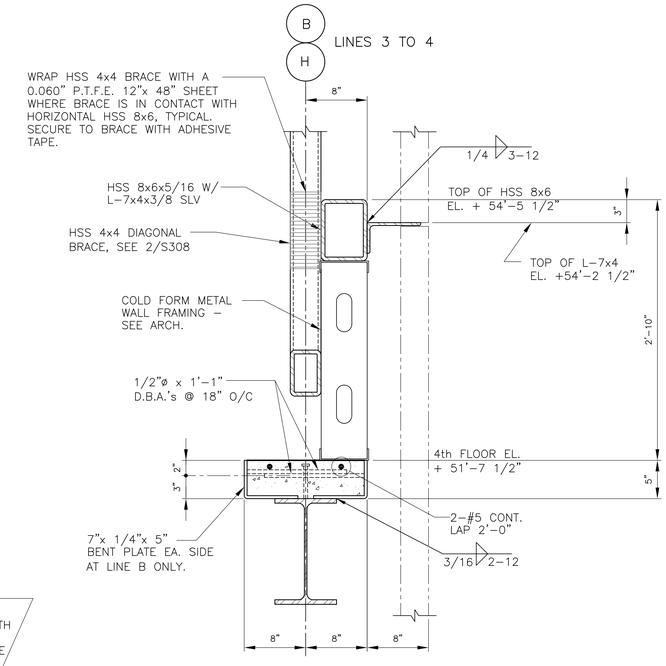

SECTION 3/S308
1 1/2"=1'-0"

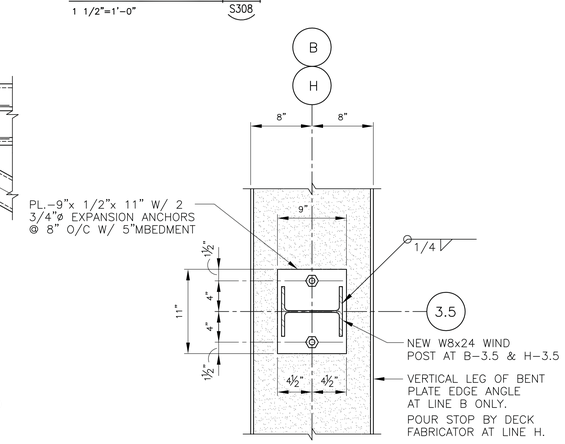

PLAN SECTION 4/S308
1 1/2"=1'-0"

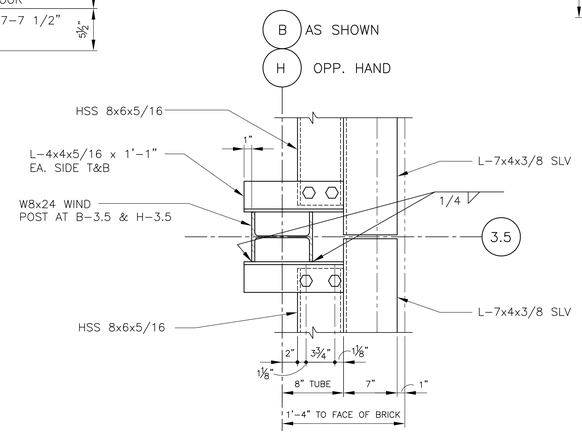

PLAN SECTION 5/S308
1 1/2"=1'-0"

Revisions:	Date

CONSULTANTS:

PADGETT Engineering Group
Consulting Structural Engineers
2255 CUMBERLAND PARKWAY - SUITE 1910 - ATLANTA - GEORGIA 30339

STATE OF LOUISIANA ROBERT C. PADGETT LICENSE No. 29420 PROFESSIONAL ENGINEER 3/11/15
LOUISIANA C.O.A 4674

ARCHITECT:
TOLAND MIZELL MOLNAR
590 Means Street NW, Suite 200
Atlanta, GA 30318
404.214.9774

Approved: Project Director

Drawing Title: SECTIONS & DETAILS

Project Title: EXPAND RADIOLOGY AND SPS OVERTON BROOKS VAMC

Location: SHREVEPORT, LA

Date: 3-13-2015 | Checked: BP | Drawn: AH

Project Number: 667-083

Building Number: 1

Drawing Number: S308

Dwg. of XX

FINAL SUBMITTAL

OFFICE OF CONSTRUCTION AND FACILITIES MANAGEMENT

VA U.S. Department of Veterans Affairs

VA FORM 08-6231A, MAR 1984

Drawing File: W:\2 Clients-Projects\2-Toland-Mizell-Molnar\2014-012 VA SHREVEPORT-EXPAND RADIOLOGY\DRAWINGS\STRUC\S308.dwg
Plotted by: ashby
Plotted Date: Mar 11, 2015 - 7:20pm