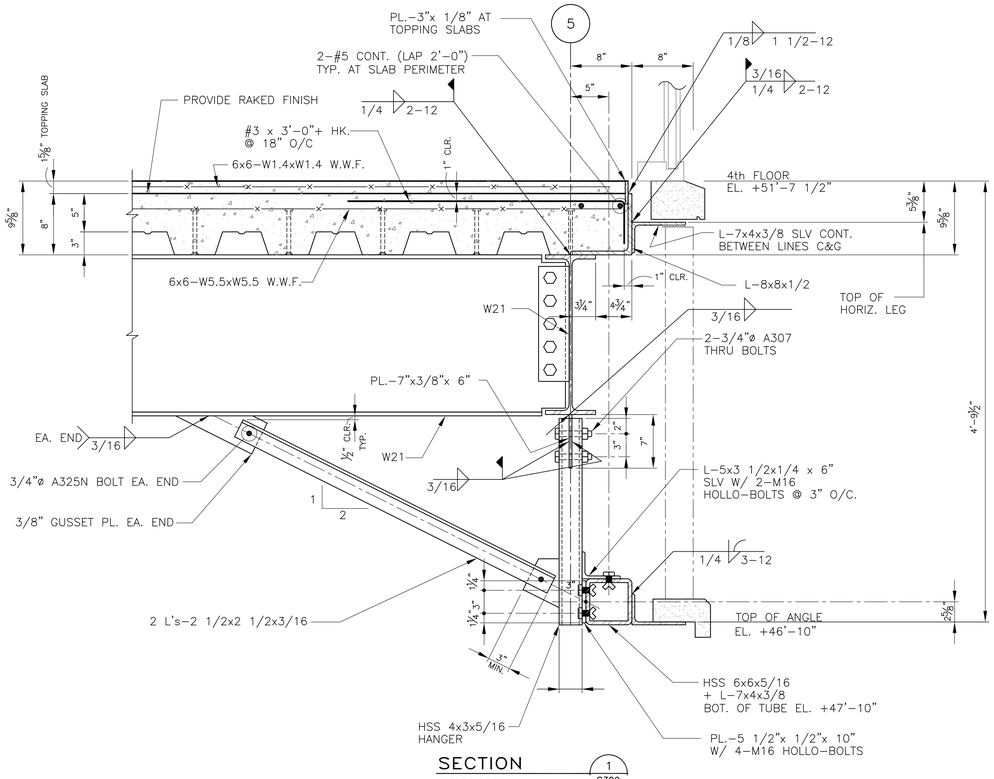

SECTION 1 / S309
1 1/2"=1'-0"

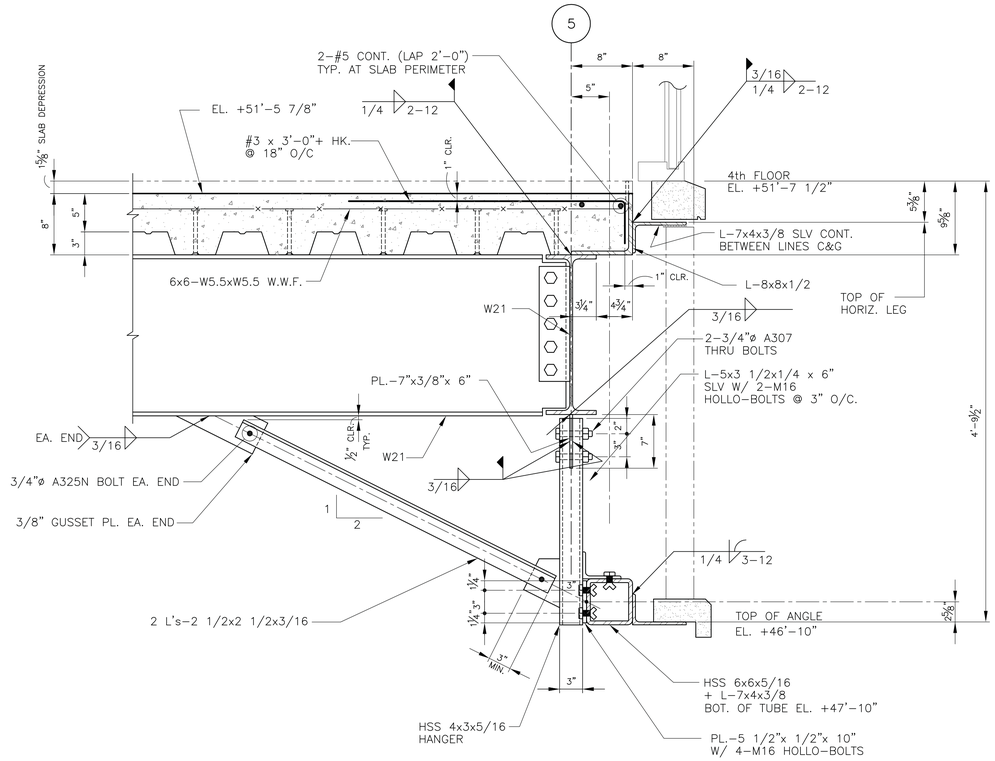

SECTION 2 / S309
1 1/2"=1'-0"

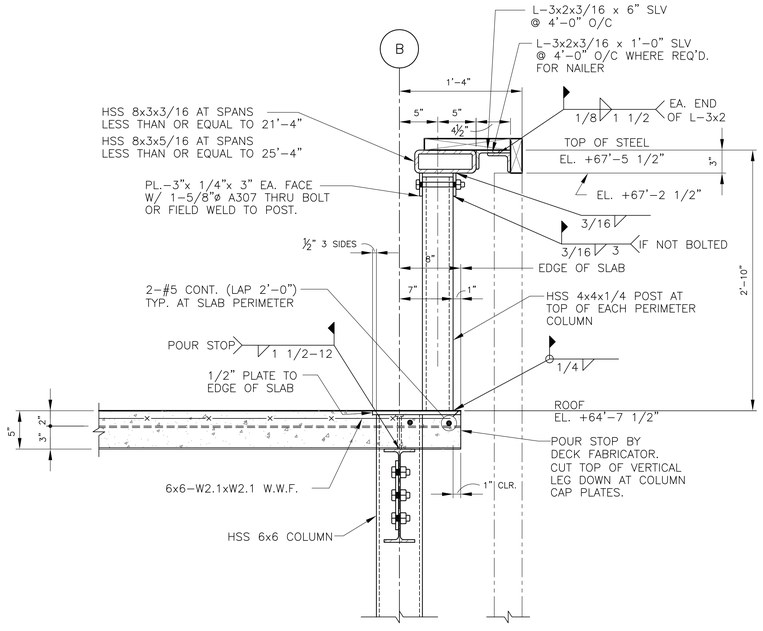

SECTION 3 / S309
1 1/2"=1'-0"

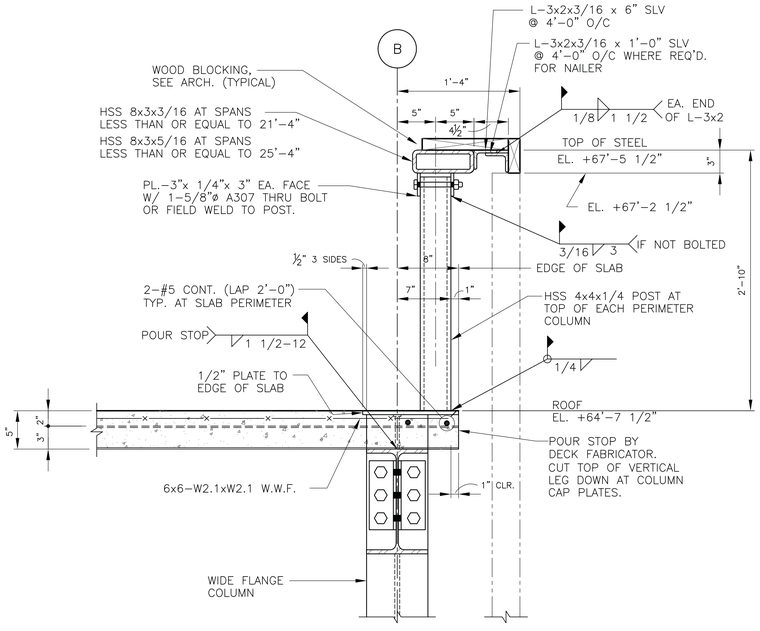

SECTION 4 / S309
1 1/2"=1'-0"

FINAL SUBMITTAL

Revisions:	Date

CONSULTANTS:

PADGETT Engineering Group
Consulting Structural Engineers
2255 CUMBERLAND PARKWAY - SUITE 1910 - ATLANTA - GEORGIA 30339

STATE OF LOUISIANA, ROBERT C. PADGETT, License No. 26820, PROFESSIONAL ENGINEER, 3/11/15
LOUISIANA C.O.A 4674

ARCHITECT:
TOLAND MIZELL MOLNAR
590 Means Street NW, Suite 200
Atlanta, GA 30318
404.214.9774

Drawing Title: SECTIONS & DETAILS
Approved: Project Director

Project Title: EXPAND RADIOLOGY AND SPS OVERTON BROOKS VAMC
Location: SHREVEPORT, LA
Date: 3-13-2015 | Checked: BP | Drawn: AH

Project Number: 667-083
Building Number: 1
Drawing Number: S309
Dwg. of XX

OFFICE OF CONSTRUCTION AND FACILITIES MANAGEMENT
VA | U.S. Department of Veterans Affairs

VA FORM 08-6231A, MAR 1984

Drawing File: W:\2_Clients-Projects\2-Toland-Mizell-Molnar\2014-012 VA SHREVEPORT-EXPAND RADIOLOGY\DRAWINGS\STRUC\S309.dwg
Plotted by: ashby
Plotted Date: Mar 11, 2015 - 7:21pm