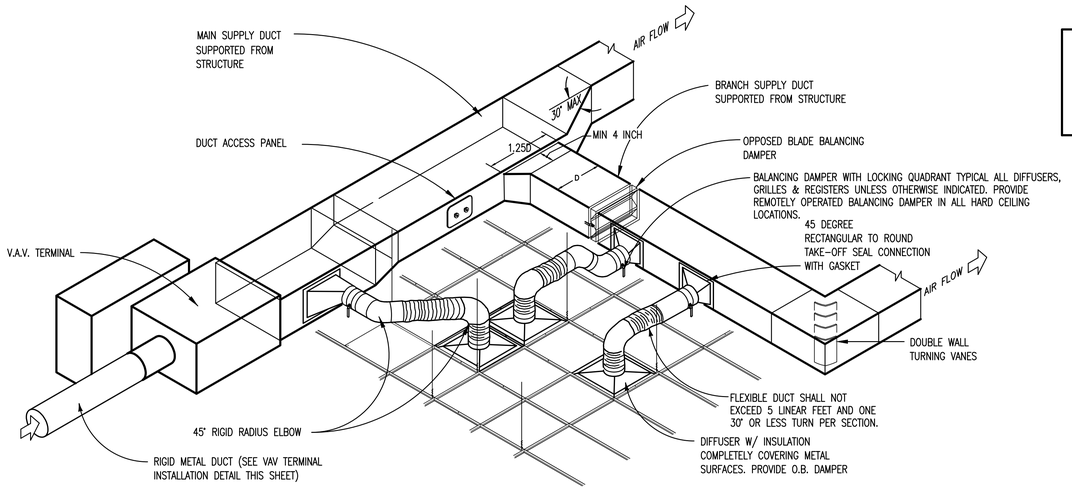

TYPICAL SYSTEM AND MATERIAL INSTALLATION
SCALE: NONE

NOTES:

A. HORIZONTAL FIRE DAMPER SIMILAR. PROVIDE SPRING LOADED CURTAIN WITH FUSIBLE LINK SET AT 165°F.

B. DETAIL FOR GENERAL GUIDANCE, INSTALL EACH FIRE DAMPER IN STRICT ACCORDANCE WITH INSTALLATION INSTRUCTIONS PACKED WITH FIRE DAMPER TO ENSURE UL RATING.

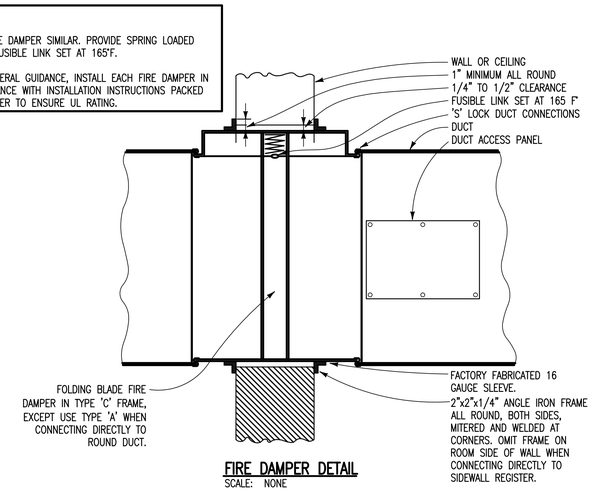

FIRE DAMPER DETAIL
SCALE: NONE

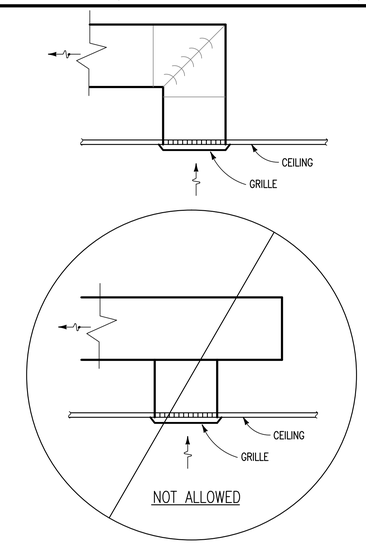

RETURN AND EXHAUST GRILLE CONNECTION DETAIL
SCALE: NONE

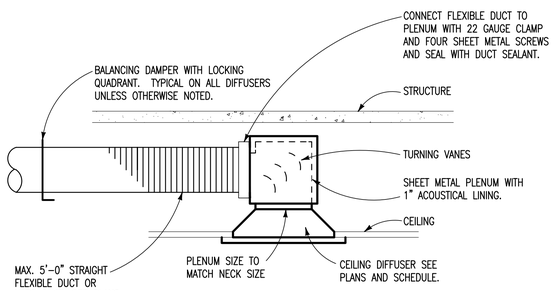

LOW HEAD CLEARANCE DIFFUSER DETAIL
SCALE: NONE

NOTES:
(EXTERIOR DUCT EXPOSED TO WEATHER DETAIL ONLY)

1. G90 GALVANIZED STEEL DUCT WITH ALL SEAMS 100% SEALED WITH MASTIC AND FIBERGLASS TAPE PER SPECIFICATION.
2. 2 INCH THICK MINERAL FIBER BOARD WITH FSK FOIL-SCRIM-KRAFT FACING. ATTACHED TO DUCT WITH 100% ADHESIVE COVERING ON ALL SIDES OF DUCT IN ADDITION TO PINS PER SPECIFICATIONS.
3. FOIL FACED RUBBERIZED BITUMEN MEMBRANE JACKET: PEEL AND STICK RUBBERIZED BITUMEN MEMBRANE, FOIL FACED, SELF SEALING, UV STABLE, 0.060 INCH THICK, VAPOR TRANSMISSION 0.0053 PERMS PER ASTM E96. LONGITUDINAL SEAM SHALL BE AT BOTTOM OF DUCT. ALL SEAMS, TRAVERSE AND LONGITUDINAL SHALL HAVE MINIMUM OF 2" OVERLAP. POLYGUARD ALUMAGUARD LT ALL WEATHER OR EQUIVALENT
4. ALUMINUM JACKET ASTM B209, 3003 ALLOY, H-14 TEMPER, 0.02 INCHED THICK WITH 1¼" CORRUGATIONS OR 0.032 INCHES THICK WITH NO CORRUGATIONS CAULK ALL SEAMS.

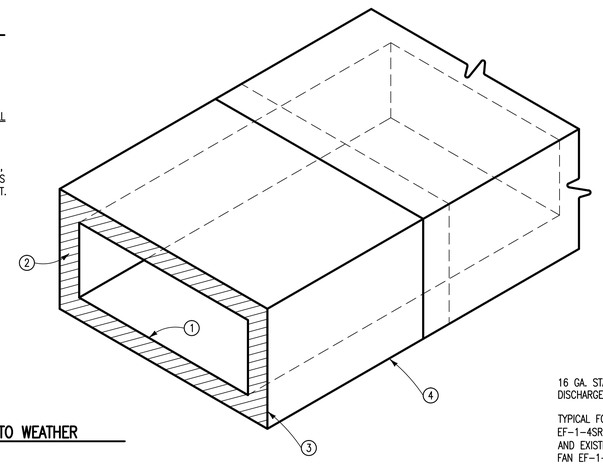

EXTERIOR DUCT EXPOSED TO WEATHER
SCALE: NONE

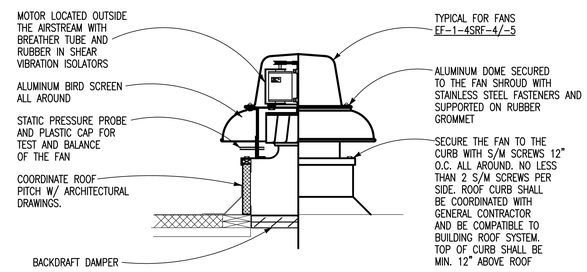

ROOF MOUNTED EXHAUST FAN DETAIL
SCALE: NONE

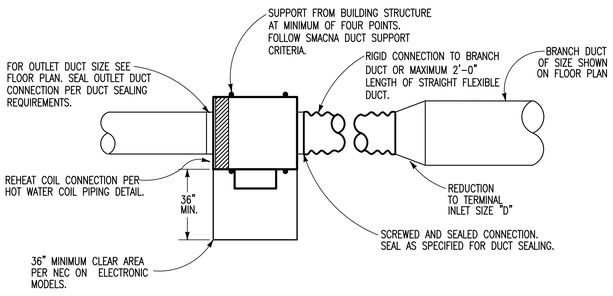

VAV TERMINAL INSTALLATION DETAIL (PLAN VIEW)
SCALE: NONE

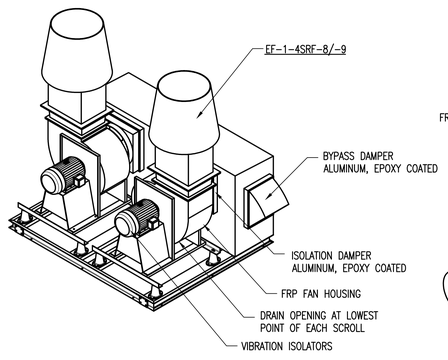

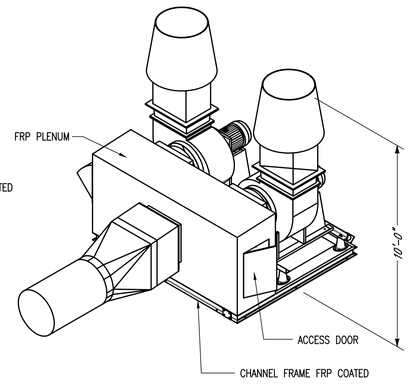

REDUNDANT LABORATORY TYPE EXHAUST FAN DETAIL
SCALE: NONE

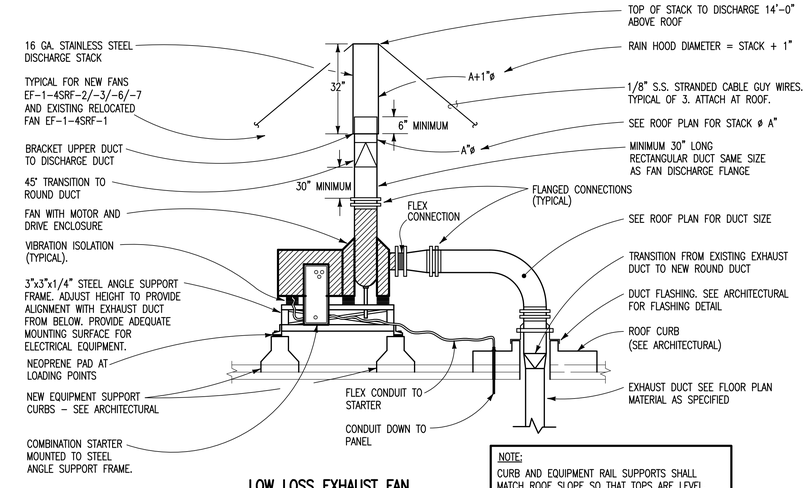

LOW LOSS EXHAUST FAN AND DISCHARGE STACK DETAIL
SCALE: NONE

NOTE:
CURB AND EQUIPMENT RAIL SUPPORTS SHALL MATCH ROOF SLOPE SO THAT TOPS ARE LEVEL. ALL EQUIPMENT, DUCT, ETC. ABOVE THE ROOF LINE SHALL BE PAINTED PER ARCHITECTURAL SPECIFICATIONS.

FINAL SUBMITTAL

Revisions:	Date

CONSULTANTS:
APPLIED ENGINEERING SOLUTIONS
440 Martin Luther King, Jr. Blvd., Suite 401
Macon, Georgia 31201
Phone: (478) 314-1270 – Fax: (478) 314-1271
www.aes-pe.com

STATE OF LOUISIANA – JEFFREY J. CLEVELAND – PROFESSIONAL ENGINEER

ARCHITECT/ENGINEERS:
TOLAND MIZELL MOLNAR
590 Means Street NW, Suite 200
Atlanta, GA 30318
404.214.9774

Drawing Title:	DETAILS - MECHANICAL
Approved: Project Director	
Project Title:	EXPAND RADIOLOGY AND SPS OVERTON BROOKS VAMC
Location:	SHREVEPORT, LA
Date:	04-17-2015
Checked:	PJC
Drawn:	JSW
Project Number:	667-083
Building Number:	1
Drawing Number:	M501
Dwg.	124 of 160

OFFICE OF CONSTRUCTION AND FACILITIES MANAGEMENT

VA | U.S. Department of Veterans Affairs

VA FORM 08-6231