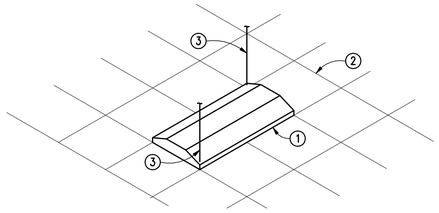

TYPICAL LAY-IN FIXTURE SUPPORT DETAIL
SCALE: NONE

NOTES:
(LAY-IN FIXTURE SUPPORT DETAIL ONLY)

1. 2'x2' OR 2'x4' LAY-IN FLUORESCENT FIXTURE.
2. SUSPENDED CEILING.
3. TIE WIRE; CONNECT A MINIMUM OF (2) OPPOSITE CORNERS OF FIXTURE TO STRUCTURE ABOVE INDEPENDENT OF OTHER CEILING SUPPORTS.

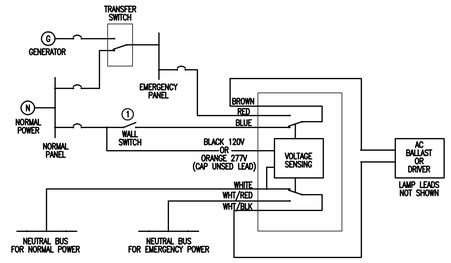

GENERATOR TRANSFER DEVICE WIRING FOR EMERGENCY LIGHT FIXTURES
SCALE: NONE

NOTES:
(GENERATOR TRANSFER DEVICE WIRING DETAIL ONLY)

1. DELETE WALL SWITCH TO ACCOMPLISH AN UNSWITCHED NORMAL POWER CIRCUIT WHERE NOTED AS SUCH ON PLANS.

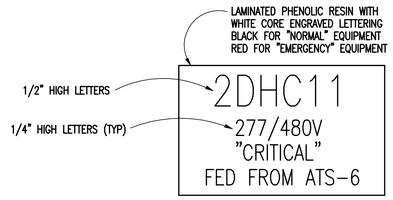

TYPICAL EQUIPMENT IDENTIFICATION NAMEPLATE
SCALE: NONE

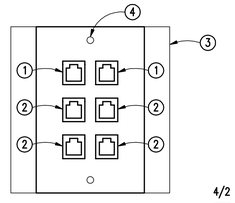

4/2

TYPICAL VOICE/DATA OUTLET
SCALE: NONE

NOTES:
(TYPICAL VOICE/DATA DETAIL ONLY)

1. RJ45 CAT 6 VOICE JACK.
2. RJ45 CAT 6 DATA JACK.
3. 4-11/16" SQ. X 2-1/2"D BOX WITH SINGLE GANG RING AND FACEPLATE.
4. VOICE ONLY OUTLETS INSTALLED AT 48" ABOVE FINISHED FLOOR SHALL HAVE STAINLESS STEEL PLATE WITH STUDS FOR MOUNTING TELEPHONE.

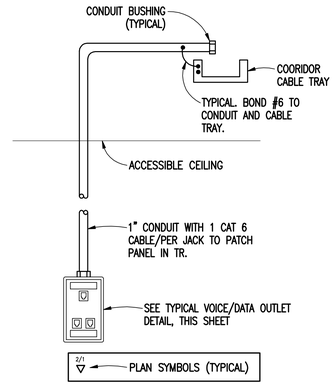

TELECOMMUNICATIONS OUTLETS
SCALE: NONE

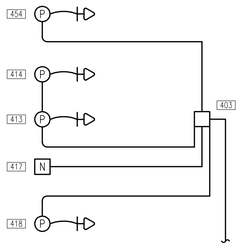

NURSE CALL RISER
SCALE: NONE

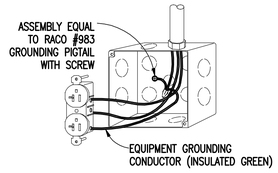

DEVICE/JUNCTION BOX GROUNDING
SCALE: NONE

UTILIZE SAME GROUNDING METHOD FOR SWITCHES

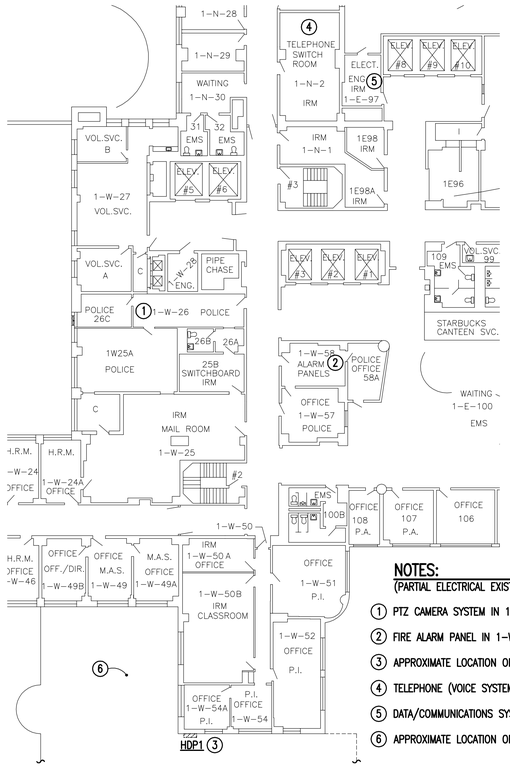

NOTES:
(PARTIAL ELECTRICAL EXISTING HOSPITAL FIRST FLOOR PLAN ONLY)

1. PTZ CAMERA SYSTEM IN 1-W-26.
2. FIRE ALARM PANEL IN 1-W-58.
3. APPROXIMATE LOCATION OF PANEL HDP1 ON BASEMENT FLOOR.
4. TELEPHONE (VOICE SYSTEM) IN 1-N-2.
5. DATA/COMMUNICATIONS SYSTEM IN 1-E-97.
6. APPROXIMATE LOCATION OF NEW EDITION.

PLAN NORTH TRUE NORTH

PARTIAL ELECTRICAL EXISTING HOSPITAL FIRST FLOOR PLAN
SCALE: 1/16" = 1'-0"

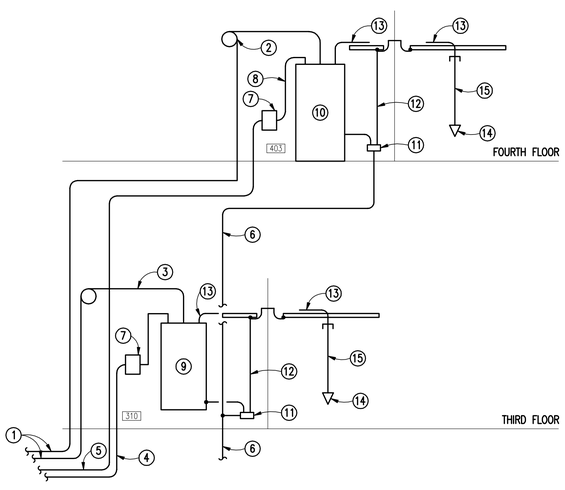

TELECOMMUNICATIONS RISER DIAGRAM
SCALE: NONE

NEW WORK KEYED NOTES:
(TELECOMMUNICATIONS RISER DIAGRAM ONLY)

1. SIX STRAND 50 MICRON RISER RATED FIBER OPTIC CABLE IN 1" CONDUIT TO FIBER PATCH PANEL IN ROOM 1-E-97.
2. 20' SERVICE LOOP.
3. TERMINATE FIBER ON 6 PORT SC PATCH PANEL.
4. 50 PAIR COPPER BACKBONE RISER RATED CMR CAT 3 IN 1" CONDUIT TO 110 PUNCH DOWN BLOCKS IN ROOM 1-N-2.
5. 100 PAIR COPPER BACKBONE RISER RATED CMR CAT 3 IN 1-1/2" CONDUIT TO 110 PUNCH DOWN BLOCKS IN ROOM 1-N-2.
6. #2AWF COPPER GROUND CONDUCTOR TO BUS IN SECOND FLOOR TR#25-73.
7. 110 CAT 6 PUNCH DOWN BLOCKS.
8. CAT 6 PATCH CORDS TO VOICE PATCH PANELS.
9. WALL MOUNTED, FLOOR SUPPORTED EQUIPMENT CABINET 27"wx30"Dx27"H.
10. 84" TWO PART EQUIPMENT RACK WITH 19" MOUNTING RAIL AND 6"x9" VERTICAL CABLE MANAGEMENT EACH SIDE.
11. TELECOMMUNICATIONS GROUND BUS TBG. 1/4"x2"x12" PREDRILLED FOR 2 HOLE LUGS UL LISTED.
12. #6 AWG GREEN INSULATED BONDING CONDUCTOR. BOND EVERY METAL COMPONENT IN THE TR.
13. CAT 6 HORIZONTAL CABLE IN CABLE TRAY.
14. VOICE DATA JACK WITH QUANTITY OF CAT 6 JACKS AS INDICATED ON PLANS.
15. 1"C WITH 1 CAT 6 CABLE FOR EACH JACK TO PATCH PANEL IN TR.

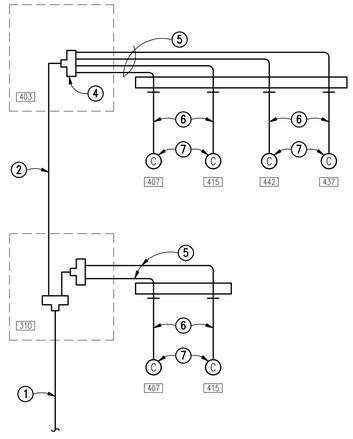

CCTV RISER DIAGRAM
SCALE: NONE

NEW WORK:
(CCTV RISER DIAGRAM ONLY)

1. 1"C WITH RG11 RISER RATED COAX CABLE TO MATV SPLITTER IN BASEMENT ROOM BS 04A.
2. 1"C WITH RG11 RISER RATED COAX CABLE.
3. TWO WAY SPLITTER.
4. FOUR WAY SPLITTER.
5. RG6 COAX CABLE IN CABLE TRAY.
6. RG6 COAX CABLE IN 1"C.
7. CATV OUTLET WITH "F" CONNECTOR. MINIMUM SIGNAL LEVEL 0dBmV (1000 MICROVOLTS) AT 55MHz AND 750MHz.

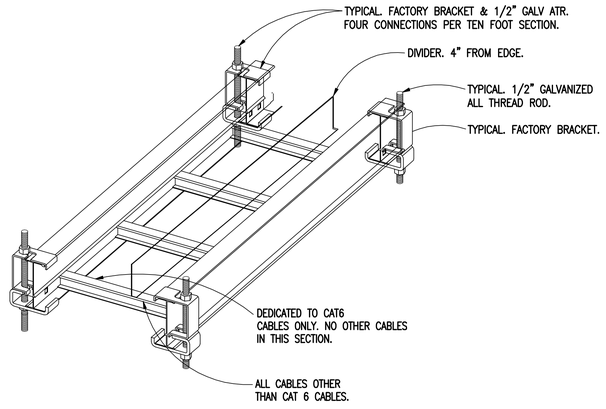

CABLE TRAY DETAIL
SCALE: NONE

CABLE TRAY GENERAL NOTES:

1. CABLE TRAY SHALL NOT BE MOUNTED ON UNISTRUT SUPPORT SYSTEM.
2. PROVIDE FACTORY MOUNTING BRACKETS AND SUPPORT CABLE TO TRAY TO COMPOSITE METAL DECK USING 1/2" ALL THREAD ROD.
3. AT DECK, MOUNTING HARDWARE SHALL BE ATTACHED TO STEEL STRUCTURE.
4. NO MOUNTING HARDWARE SHALL BE INSTALLED BETWEEN THE RIBS, IE NO MOUNTING HARDWARE ON ANGLED COMPONENTS OF DECK OR IN THINNEST COMPONENTS OF DECK.
5. ALL CABLE TRAY SHALL BE SECURED TOGETHER PER THE MANUFACTURER'S RECOMMENDATIONS.
6. NO SINGLE PIECE OF CABLE TRAY SHALL BE LONGER THAT TEN FEET.
7. ON EACH TEN FOOT PIECE OF CABLE TRAY, THERE SHALL BE FOUR FACTORY MOUNTING BRACKETS AND ASSOICATED FOUR 1/2" ALL THREAD ROD ATTACHED TO RIBS OF DECK ABOVE.

FINAL SUBMITTAL

Revisions:	Date

CONSULTANTS:

CLARK•NEXSEN
440 MARTIN LUTHER KING, JR. BLVD.
MACON, GA 31201
478-743-8415 FAX 478-743-8239
WWW.CLARKNEXSEN.COM

STATE OF LOUISIANA — RANDY PEACOCK Licence No. 0003857 — PROFESSIONAL ENGINEER

ARCHITECT:
TOLAND MIZELL MOLNAR
590 Means Street NW, Suite 200
Atlanta, GA 30318
404.214.9774

Drawing Title:	DETAILS ELECTRICAL
Approved: Project Director	
Project Title:	EXPAND RADIOLOGY AND SPS OVERTON BROOKS VAMC
Location:	SHREVEPORT, LA
Date:	04-17-2015
Checked:	CBC
Drawn:	TWG
Project Number:	667-083
Building Number:	1
Drawing Number:	E501
Dwg.	157 of 160

OFFICE OF CONSTRUCTION AND FACILITIES MANAGEMENT

VA — U.S. Department of Veterans Affairs

VA FORM 08-6231A, MAR 1984
CN 5123

Drawing File: H:\2013\5123-VA Shreveport 3rd and 4th Floors\Drawings\5123 E001, E501, 601-3.dwg
Plotted by: tglleland
Plotted Date: Apr 20, 2015 - 9:59am