DRAWING INDEX

		ISSUE LOG			
		50% SUBMISSION	95% SUBMISSION	100% SUBMISSION	FINAL SUBMISSION
S0.01	DRAWING INDEX AND LIST OF ABBREVIATIONS	X	X	X	X
S0.02	GENERAL STRUCTURAL NOTES	X	X	X	X
S0.03	GENERAL STRUCTURAL NOTES	X	X	X	X
S0.04	SPECIAL INSPECTION NOTES	X	X	X	X
S0.05	SPECIAL INSPECTION NOTES	X	X	X	X
S0.06	LIVE LOAD MAPS	X	X	X	X
S1.00	BASEMENT/ FOUNDATION PLAN	X	X	X	X
S1.01	FIRST FLOOR FRAMING PLAN	X	X	X	X
S1.02	SECOND FLOOR FRAMING PLAN	X	X	X	X
S1.03	ROOF FRAMING PLAN	X	X	X	X
S3.01	BRBF FRAMING ELEVATIONS	X	X	X	X
S3.02	TYPICAL BRACED FRAME DETAILS	X	X	X	X
S4.01	EXTERIOR ELEVATIONS	X	X	X	X
S5.01	TYPICAL CONCRETE DETAILS	X	X	X	X
S5.02	TYPICAL CONCRETE DETAILS	X	X	X	X
S6.01	TYPICAL STEEL DETAILS	X	X	X	X
S6.02	TYPICAL STEEL DETAILS	X	X	X	X
S6.03	TYPICAL STEEL DETAILS	X	X	X	X
S6.04	TYPICAL STEEL DETAILS	X	X	X	X
S6.05	STEEL FRAMING DETAILS	-	X	X	X
S7.01	TYPICAL FACADE DETAILS	-	X	X	X
	DATE	06/18/2015	08/10/2015	10/07/2015	11/27/2015

ISSUE LOG KEY:
' X ' ISSUED AS PART OF A SET
' - ' NOT A PART OF ISSUED SET
' * ' FOR INFORMATION ONLY

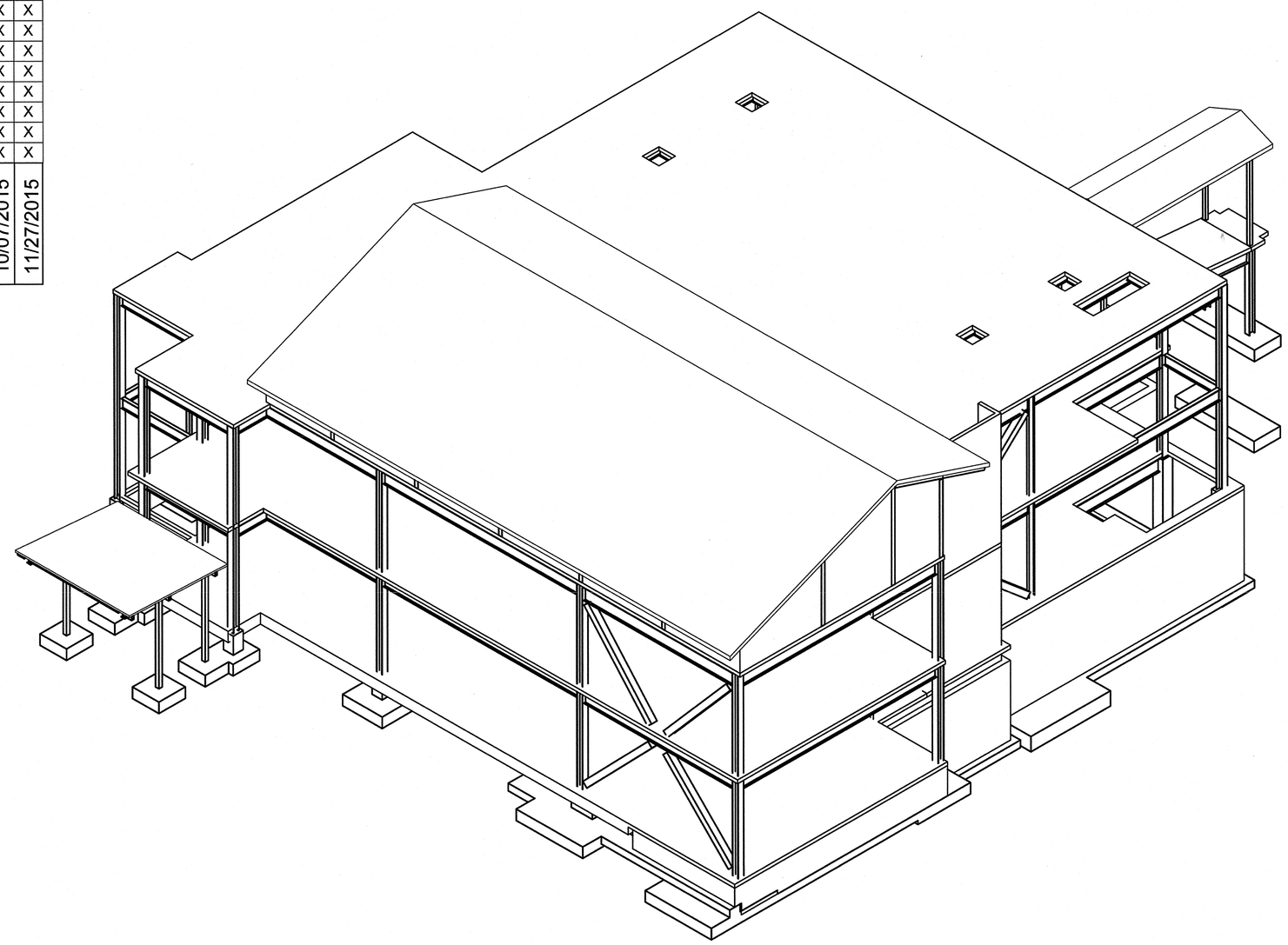

LIST OF ABBREVIATIONS

A.B.	ANCHOR BOLT
ACI	AMERICAN CONCRETE INSTITUTE
ADD'L.	ADDITIONAL
AESS	ARCHITECTURAL EXPOSED STRUCTURAL STEEL
AISC	AMERICAN INSTITUTE OF STEEL CONSTRUCTION INCORPORATED
ALT.	ALTERNATE
ALUM.	ALUMINUM
ARCH.	ARCHITECT
ASCE	AMERICAN SOCIETY OF CIVIL ENGINEERS
ASTM	AMERICAN SOCIETY FOR TESTING AND MATERIALS
AWS	AMERICAN WELDING SOCIETY
BLDG.	BUILDING
BOT.	BOTTOM
BRBF	BUCKLING RESTRAINED BRACED FRAME
C.G.	CENTER OF GRAVITY
C.I.P.	CAST IN PLACE
C.J.	CONTROL JOINT
C.J.P.	COMPLETE JOINT PENETRATION
CL	CENTERLINE
CLR.	CLEAR
CMU	CONCRETE MASONRY UNIT
COL.	COLUMN
CONC.	CONCRETE
CONN.	CONNECTION
CONST.	CONSTRUCTION
CONT.	CONTINUOUS
db	BAR DIAMETER
DBA	DEFORMED BAR ANCHOR
DET.	DETAIL
DIA., Ø	DIAMETER
DIAG.	DIAGONAL
D.L.	DEAD LOAD
DWG.	DRAWING
ELEC.	ELECTRICAL
EL.	ELEVATION
EQ.	EQUAL
EXIST., (E)	EXISTING
EXP.	EXPANSION
EXT.	EXTERIOR
FDN.	FOUNDATION
FIN.	FINISH
FLR.	FLOOR
FT.	FOOT
FTG.	FOOTING
GA.	GAUGE
GALV.	GALVANIZED
GL	GLULAM
HORIZ.	HORIZONTAL
HSS	HOLLOW STRUCTURAL STEEL
IBC	INTERNATIONAL BUILDING CODE
ICBO	INTERNATIONAL CONFERENCE OF BUILDING OFFICIALS
I.D.	INSIDE DIAMETER
IN.	INCH
INT.	INTERIOR
K	KIPS
KSF	KIPS PER SQUARE FOOT
KSI	KIPS PER SQUARE INCH
LB.	POUND
L.L.	LIVE LOAD
LLH	LONG LEG HORIZONTAL
LLV	LONG LEG VERTICAL
LOC.	LOCATION
LONG.	LONGITUDINAL
LVF	LOW VELOCITY FASTENER
MAX.	MAXIMUM
MBMA	METAL BUILDING MANUFACTURERS ASSOCIATION
MECH.	MECHANICAL
MFR.	MANUFACTURER
MIN.	MINIMUM
MISC.	MISCELLANEOUS
MPH	MILES PER HOUR
MT	MAGNETIC PARTICLE TESTING
(N)	NEW
N.I.C.	NOT IN CONTRACT
NOM.	NOMINAL
NO.	NUMBER
N.T.S.	NOT TO SCALE
o.c.	ON CENTER
O.D.	OUTSIDE DIAMETER
OPP.	OPPOSITE
OWJ	OPEN WEB JOIST
PAF	POWDER ACTUATED FASTENER
PART.	PARTITION
P/C	PRECAST
PCF	POUNDS PER CUBIC FOOT
PERIM.	PERIMETER
PL	PLATE
PP	PARTIAL PENETRATION
PSF	POUNDS PER SQUARE FOOT
PSI	POUNDS PER SQUARE INCH
P/T	POST-TENSIONED
P.T.	PRESSURE TREATED
PVC	POLYVINYL CHLORIDE
R, RAD.	RADIUS
RCSC	RESEARCH COUNCIL ON STRUCTURAL CONNECTIONS
REF.	REFERENCE
RET.	RETURN
REINF.	REINFORCING
REQ'D.	REQUIRED
REQ'MTS.	REQUIREMENTS
SCHED.	SCHEDULE
S.C.	SLIP CRITICAL
SIM.	SIMILAR
SLRS	SEISMIC LOAD RESISTING SYSTEM
S.O.G.	SLAB ON GRADE
SPEC.	SPECIFICATION
SQ.	SQUARE
SS	STAINLESS STEEL
SSMA	STEEL STUD MANUFACTURERS ASSOCIATION
STD.	STANDARD
STRUCT.	STRUCTURAL
SYM.	SYMMETRICAL
THRU	THROUGH
T & G	TONGUE AND GROOVE
TRANS.	TRANSVERSE
TJ	TRUSS JOIST
TS	LIGHT GAUGE TUBE STEEL
TYP.	TYPICAL
U.N.O.	UNLESS NOTED OTHERWISE
U.T.	ULTRASONIC TESTING
VERT.	VERTICAL
V.I.F.	VERIFY IN FIELD
w/	WITH
WF	WIDE FLANGE
w/o	WITHOUT
W.P.	WORK POINT
WPS	WELDING PROCEDURE SPECIFICATION
WWF	WELDED WIRE FABRIC

Revisions | Date

pka ARCHITECTS

PETERSEN KOLBERG & ASSOCIATES
ARCHITECTS/PLANNERS
6969 SW Hampton Street
Portland, OR 97223
phone: 503-968-6800
fax: 503-968-6860
www.pkaarchitects.com

REGISTERED PROFESSIONAL ENGINEER 54390.542-5 OREGON JULY 12, 1994 M. BRADLY MOYER
EXPIRES 12-31-16

DEPARTMENT OF VETERANS AFFAIRS
SOUTHERN OREGON REHABILITATION CENTER & CLINICS
8495 Crater Lake Highway, White City, Oregon 97503-3012

kpff
111 SW Fifth Ave., Suite 2500
Portland, OR 97204
O: 503.227.3251
F: 503.227.7980
www.kpff.com

Drawing Title: DRAWING INDEX AND LIST OF ABBREVIATIONS

SPECIALTY CARE BUILDING - 201B

Approved: Proj Eng | Approved: Infect Cont | Approved: Chief P&O | Approved: Chief M&R | Approved: Safety Mgr.

Approved: Service Chief | Approved: Chief Facilities Mgmt | Approved: VAMC Director

Building No.: Building 201B | Chkd By/Proj. Mgr: NR | Drawn By: CB | Location

Date: 11/27/15
Project No.: 131207
Drawing No.: S0.01
Dwg. of

DO NOT SCALE DRAWINGS

GENERAL STRUCTURAL NOTES

STRUCTURAL DRAWINGS ARE A PORTION OF THE CONTRACT DOCUMENTS AND ARE INTENDED TO BE USED WITH ARCHITECTURAL, MECHANICAL, AND ELECTRICAL DRAWINGS. THE CONTRACTOR IS RESPONSIBLE FOR COORDINATING THE REQUIREMENTS FROM THESE DRAWINGS INTO THEIR SHOP DRAWINGS AND WORK.

THESE GENERAL NOTES SUPPLEMENT THE PROJECT SPECIFICATIONS. REFER TO THE PROJECT SPECIFICATIONS FOR ADDITIONAL REQUIREMENTS. NOTES AND DETAILS ON THE STRUCTURAL DRAWINGS SHALL TAKE PRECEDENCE OVER THE GENERAL NOTES AND TYPICAL DETAILS. WHERE NO DETAILS ARE GIVEN, CONSTRUCTION SHALL BE AS SHOWN FOR SIMILAR WORK.

CODE REQUIREMENTS:
CONFORM TO THE 2014 OREGON STRUCTURAL SPECIALTY CODE (OSSC), BASED ON THE 2012 INTERNATIONAL BUILDING CODE (IBC), AND VA SEISMIC DESIGN REQUIREMENTS 11-18-8 AND PHYSICAL SECURITY DESIGN MANUAL FOR VA MISSION CRITICAL FACILITIES.

TEMPORARY CONDITIONS:
THE STRUCTURE IS DESIGNED TO FUNCTION AS A UNIT UPON COMPLETION. THE CONTRACTOR IS RESPONSIBLE FOR FURNISHING ALL TEMPORARY BRACING AND/OR SUPPORT THAT MAY BE REQUIRED AS THE RESULT OF THE CONTRACTOR'S CONSTRUCTION METHODS AND/OR SEQUENCES.

CONTRACTOR'S CONSTRUCTION AND/OR ERECTION SEQUENCES SHALL RECOGNIZE AND CONSIDER THE EFFECTS OF THERMAL MOVEMENTS OF STRUCTURAL ELEMENTS DURING THE CONSTRUCTION PERIOD.

RETAINING WALLS WHICH TIE TO UPPER SLABS SHALL NOT BE BACKFILLED UNTIL THE UPPER SLABS REACH FULL STRENGTH UNLESS ADEQUATE BRACING IS PROVIDED AT THE TOP OF THE WALL.

EXISTING CONDITIONS:
ALL EXISTING CONDITIONS, DIMENSIONS AND ELEVATIONS SHALL BE FIELD VERIFIED. THE CONTRACTOR SHALL NOTIFY THE ARCHITECT OF ANY SIGNIFICANT DISCREPANCIES FROM CONDITIONS SHOWN ON THE DRAWINGS.

ASSUMED FUTURE CONSTRUCTION:
VERTICAL: ADJACENT BUILDING TO BE CONNECTED TO SKYBRIDGE, SEISMIC JOINT PROVIDED TO SEPARATE STRUCTURES
HORIZONTAL: ADJACENT BUILDING TO BE CONNECTED TO SKYBRIDGE, SEISMIC JOINT PROVIDED TO SEPARATE STRUCTURES

DESIGN CRITERIA:
DESIGN WAS BASED ON THE STRENGTH AND DEFLECTION CRITERIA OF THE OSSC. IN ADDITION TO THE DEAD LOADS, THE FOLLOWING LOADS AND ALLOWABLES WERE USED FOR DESIGN, WITH LIVE LOADS (L.L.) REDUCED PER OSSC:

DESIGN CRITERIA		
GRAVITY SYSTEM CRITERIA		
ROOF LIVE/SNOW LOAD	25 PSF L.L. (ALSO SEE SNOW LOAD CRITERIA BELOW)	
FLOOR LIVE LOADS:	UNIFORM LOAD	CONCENTRATED LOAD
OFFICES	50 PSF L.L. + 15 PSF FOR PARTITIONS, OR 100 PSF L.L. (INCLUDING PARTITIONS) WHICHEVER IS MORE CRITICAL FOR MEMBER DESIGN	2,000 LBS.
CORRIDORS AND STAIRS	100 PSF L.L.	2,000 LBS. (300 LBS. @ STAIRS)
STORAGE (LIGHT)	125 PSF L.L	2,000 LBS.
LIBRARY (STACK ROOMS)	150 PSF L.L.	2,000 LBS.
SIDEWALKS AND DRIVEWAYS	250 PSF L.L.	8,000 LBS.
VERTICAL FLOOR DEFLECTION (CLADDING DESIGN)	0.75" OR L/360 WHICHEVER IS LESS LONG TERM DEAD LOAD PLUS LIVE LOAD; 0.375" OR L/600 WHICHEVER IS LESS AT BRICK VENEER SUPPORTS	
VERTICAL FLOOR DEFLECTION (INTERIOR)	L/360 LIVE LOAD PER OSSC TABLE 1604.3	
NOTES:	1. LIVE LOADS REDUCED PER OSSC.	
	2. MEMBER DESIGNED FOR MORE CRITICAL OF UNIFORM OR CONCENTRATED LOAD.	
SNOW CRITERIA		
DESIGN ROOF SNOW LOAD	25 PSF MINIMUM IN ACCORDANCE WITH OSSC	
SNOW DRIFT	PER OSSC AS SHOWN ON PLANS	
GROUND SNOW LOAD	Pg= 10 PSF IN ACCORDANCE WITH 2007 SNOW LOAD ANALYSIS FOR OREGON	
FLAT ROOF SNOW LOAD	Pf = 11 PSF	
SNOW EXPOSURE FACTOR	Ce = 1.0	
SNOW LOAD IMPORTANCE FACTOR	Is = 1.2	
THERMAL FACTOR	Ct = 1.0	
GEOTECHNICAL CRITERIA		
DESIGN BASED ON REPORT BY:	MARQUESS & ASSOCIATES APRIL 21, 2015	
RETAINING WALLS - CANTILEVERED	40 PCF (EQUIVALENT FLUID PRESSURE)	
RETAINING WALLS - BRACED AT TOP	60 PCF (EQUIVALENT FLUID PRESSURE)	
RETAINING WALLS - SEISMIC	0.13 TIMES THE EQUIVALENT FLUID PRESSURE SOIL MASS	
ALLOWABLE SOIL PRESSURE:	3000 PSF	
SHORT TERM LOADING	4000 PSF	
WIND CRITERIA		
RISK CATEGORY	II	
MAIN WIND FORCE RESISTING SYSTEM	Vult = 120 MPH ULTIMATE DESIGN WIND SPEED (3-SECOND GUST)	
COMPONENTS AND CLADDINGS	Vult = 120 MPH ULTIMATE DESIGN WIND SPEED (3-SECOND GUST)	
EXPOSURE CATEGORY	B	
IMPORTANCE FACTOR	Iw = 1.0	
GUST/INTERNAL PRESSURE	GCpi = +/- 0.18	
SEISMIC CRITERIA		
RISK CATEGORY	IV	
SEISMIC DESIGN CATEGORY	D	
SITE CLASS	C	
IMPORTANCE FACTOR	IE = 1.5	
MCE SPECTRAL ACCELERATION	Ss = 0.585g	S1 = 0.264g
SITE COEFFICIENT	Fa = 1.166	Fv = 1.536
DESIGN SPECTRAL ACCELERATION	SDS = 0.455g	SD1 = 0.270g
ANALYSIS PROCEDURE	EQUIVALENT LATERAL FORCE PER ASCE 7-10, SECTION 12.8	
	X DIRECTION (E / W)	Y DIRECTION (N / S)
SEISMIC LOAD RESISTING SYSTEM (SLRS)	STEEL BUCKLING RESTRAINED BRACED FRAMES	STEEL BUCKLING RESTRAINED BRACED FRAMES
RESPONSE MODIFICATION FACTOR	R = 8	R = 8
SEISMIC RESPONSE COEFFICIENT	Cs = 0.058	Cs = 0.058
DESIGN BASE SHEAR	100 KIPS	100 KIPS
REDUNDANCY FACTOR	rho = 1.0	rho = 1.0
DESIGN INELASTIC STORY DRIFT	Δ = 1.00"	Δ = 1.00"

SEISMIC LOAD RESISTING SYSTEM:
THE SEISMIC LOAD RESISTING SYSTEM (SLRS) FOR THE COMPLETED STRUCTURE IS AS FOLLOWS:

THE SEISMIC LOAD RESISTING SYSTEMS CONSISTS OF CONCRETE OVER METAL DECK DIAPHRAGMS WITH PERIMETER CHORD REINFORCING WHICH IS CONNECTED TO STEEL BUCKLING RESTRAINED BRACED FRAMES LOCATED AT THE PERIMETER OF THE STRUCTURE.

REFERENCE SHEETS S3.01 THRU S3.02 FOR SLRS ELEVATIONS AND DETAILS. REFERENCE PLANS FOR ADDITIONAL SLRS COMPONENTS AND DETAILS.

REFER TO THE GENERAL STRUCTURAL NOTES AND PROJECT SPECIFICATIONS FOR DETAILING, INSTALLATION, TESTING AND INSPECTION REQUIREMENTS FOR MEMBERS THAT ARE PART OF THE SEISMIC LOAD RESISTING SYSTEM (SLRS).

STRUCTURAL OBSERVATION:
THE STRUCTURAL ENGINEER OF RECORD (SER) WILL PERFORM STRUCTURAL OBSERVATION BASED ON THE REQUIREMENTS OF THE OSSC AT THE STAGES OF CONSTRUCTION LISTED BELOW. CONTRACTOR SHALL PROVIDE SUFFICIENT NOTICE AND ACCESS FOR THE SER TO PERFORM THESE OBSERVATIONS.

STRUCTURAL OBSERVATIONS			
ITEM	OBSERVED BY (2) AOR	OBSERVED BY (2) SER	COMMENTS
PRIOR TO FIRST CONCRETE POUR		X	REF. NOTES 1,3,4,5
PRIOR TO FIRST CONCRETE DECK POUR		X	REF. NOTES 1,3,4,5
DURING INITIAL STEEL ERECTION		X	REF. NOTES 1,3,4
AS REQUIRED TO ADDRESS STRUCTURAL ISSUES		X	REF. NOTES 1,3,4

FOOTNOTES:

1. CONTRACTOR IS RESPONSIBLE FOR NOTIFYING THE SER IN ADVANCE.
2. SER - STRUCTURAL ENGINEER OF RECORD.
   AOR - ARCHITECT OF RECORD.
3. A FIELD REPORT WILL BE SUBMITTED TO THE BUILDING DEPARTMENT FOLLOWING EACH SITE VISIT.
4. STRUCTURAL OBSERVATION IS FOR THE GENERAL CONFORMANCE OF THE STRUCTURAL DRAWING, SPECIAL INSPECTION IS STILL REQUIRED.
5. AFTER REINFORCING STEEL HAS BEEN INSTALLED.

SPECIAL INSPECTION AND TESTING:
SPECIAL INSPECTION WILL BE PROVIDED BY THE CONTRACTOR BASED ON THE REQUIREMENTS OF THE OSSC AS SUMMARIZED IN THE SPECIAL INSPECTION AND TESTING PROGRAM ON SHEET S0.04 AND S0.05. CONTRACTOR SHALL PROVIDE SUFFICIENT NOTICE AND ACCESS FOR THE SPECIAL INSPECTOR TO PERFORM THESE INSPECTIONS.

SUBMITTALS:
SHOP DRAWINGS SHALL BE SUBMITTED TO THE ARCHITECT PRIOR TO FABRICATION AND CONSTRUCTION OF ALL STRUCTURAL ITEMS, INCLUDING THE FOLLOWING:

SUBMITTALS			
ITEM	SUBMITTAL (1,4)	DEFERRED SUBMITTAL (2,4)	COMMENTS
CONCRETE MIX DESIGNS	X		
CONCRETE REINFORCEMENT	X		
MASONRY REINFORCEMENT	X		
CONCRETE ANCHORAGES	X		
EMBEDDED STEEL ITEMS	X		
STRUCTURAL STEEL	X		
STEEL WELDING PROCEDURES	X		
STEEL DECKING	X		
LIGHT GAUGE METAL FRAMING	X		
STEEL FASTENERS	X		
GLAZING SYSTEMS		X	
STAIRS AND RAILINGS		X	
MEP EQUIPMENT ANCHORAGE AND BRACING		X	REF. NOTES

FOOTNOTES:

1. SHOP DRAWINGS SHALL BE SUBMITTED TO THE ARCHITECT PRIOR TO FABRICATION AND CONSTRUCTION OF STRUCTURAL ITEMS. IF THE SHOP DRAWINGS DIFFER FROM OR ADD TO THE DESIGN OF THE STRUCTURAL DRAWINGS, THEY SHALL BEAR THE SEAL AND SIGNATURE OF A STRUCTURAL ENGINEER REGISTERED IN THE STATE OF OREGON. ANY CHANGES TO THE STRUCTURAL DRAWINGS SHALL BE SUBMITTED TO THE ARCHITECT AND ARE SUBJECT TO REVIEW AND ACCEPTANCE OF THE STRUCTURAL ENGINEER.

2. DESIGN DRAWINGS, SHOP DRAWINGS, AND CALCULATIONS FOR THE DESIGN AND FABRICATION OF ITEMS THAT ARE DESIGNED BY OTHERS SHALL BEAR THE SEAL AND SIGNATURE OF A STRUCTURAL ENGINEER REGISTERED IN THE STATE OF OREGON, AND SHALL BE SUBMITTED TO THE ARCHITECT PRIOR TO FABRICATION. CALCULATIONS SHALL BE INCLUDED FOR ALL CONNECTIONS TO THE STRUCTURE, CONSIDERING LOCALIZED EFFECTS ON STRUCTURAL ELEMENTS INDUCED BY THE CONNECTION LOADS. DESIGN SHALL BE BASED ON THE REQUIREMENTS OF THE OSSC AND AS NOTED UNDER "DESIGN CRITERIA".

3. THE CONTRACTOR SHALL COORDINATE SEISMIC RESTRAINTS OF MECHANICAL, PLUMBING, AND ELECTRICAL EQUIPMENT, MACHINERY, AND ASSOCIATED PIPING WITH THE STRUCTURE. CONNECTIONS TO STRUCTURE SHALL CONFORM TO ASCE 7-10 CHAPTER 13 OR VA DOCUMENT H-18-8 WHICHEVER IS MORE RESTRICTIVE, BE DESIGNED BY AN ENGINEER REGISTERED IN THE STATE OF OREGON, AND SHALL BE SUBMITTED TO THE ARCHITECT PRIOR TO FABRICATION.

4. FIELD ENGINEERED DETAILS DEVELOPED BY THE CONTRACTOR THAT DIFFER FROM OR ADD TO THE STRUCTURAL DRAWINGS SHALL BEAR THE SEAL AND SIGNATURE OF A STRUCTURAL ENGINEER REGISTERED IN THE STATE OF OREGON AND SHALL BE SUBMITTED TO THE ARCHITECT PRIOR TO CONSTRUCTION.

CONCRETE:
CONCRETE WORK SHALL CONFORM TO CHAPTER 19 OF THE OSSC. CONCRETE STRENGTHS SHALL BE VERIFIED BY STANDARD CYLINDER TESTS PER ASTM C39. MIX DESIGNS SHALL BE AS FOLLOWS:

CONCRETE MIX DESIGNS				
USE	f'c (PSI)	TEST AGE (DAYS)	MAX. W/CM RATIO (NOTE 1)	MAX. AGGREGATE SIZE
MISC. CONCRETE, CURBS, SIDEWALKS, ETC.	3,000	28	0.50	1"
INTERIOR SLABS ON GRADE	4,000	28	0.50	1"
BASEMENT WALLS, SPREAD FOOTINGS AND MAT FOUNDATIONS	4,000	28	0.45	1"
CONCRETE ON METAL DECK, U.N.O.	4,000	28	0.50	3/4"

TABLES NOTES:
1. VERIFY WATER-CEMENTITOUS MATERIAL RATIO WITH FLOOR COVERING MANUFACTURER FOR CONCRETE FLOORS WITH MOISTURE SENSITIVE FLOOR COVERINGS.
2. ESTABLISH WATER-CEMENTITOUS MATERIAL RATIO PER ACI 318-11 CHAPTER 5.
3. REFERENCE EXPOSED SLAB GENERAL NOTES FOR ADDITIONAL MIX REQUIREMENTS.
4. POST-TENSIONED OR PRESTRESSED CONCRETE SHALL NOT CONTAIN MORE THAN 0.06% CHLORIDE IONS BY WEIGHT OF CEMENT.

PORTLAND CEMENT CONTENT MAY BE REPLACED UP TO 20% WITH FLYASH CONFORMING TO ASTM C618 (INCLUDING TABLE 2A) TYPE F OR TYPE C OR UP TO 50% WITH SLAG CEMENT CONFORMING TO ASTM C989, PROVIDED THAT THE MIX STRENGTH IS SUBSTANTIATED BY TEST DATA. FOR MIX DESIGNS WITH f'c = 5,000 PSI OR LESS, SLAG CEMENT MAY BE SUBSTITUTED FOR FLYASH AT A 1:1 RATIO WITHOUT TEST DATA. WHEN SLAG CEMENT IS SUBSTITUTED IN HIGHER STRENGTH MIXES OR AT DIFFERENT RATIO, THE MIX STRENGTH MUST BE SUBSTANTIATED BY TEST DATA.

A WATER-REDUCING ADMIXTURE CONFORMING TO ASTM C494 USED IN STRICT ACCORDANCE WITH THE MANUFACTURER'S RECOMMENDATIONS SHALL BE INCORPORATED IN CONCRETE DESIGN MIXES. A HIGH-RANGE WATER-REDUCING (HRWR) ADMIXTURE CONFORMING TO ASTM C494 TYPE F OR G MAY BE USED IN CONCRETE MIXES PROVIDING THAT THE SLUMP DOES NOT EXCEED 10". AN AIR-ENTRAINING AGENT CONFORMING TO ASTM C260 SHALL BE USED IN CONCRETE MIXES FOR ALL CONCRETE EXPOSED TO WEATHER. THE AMOUNT OF ENTRAINED AIR BY VOLUME SHALL BE AS FOLLOWS ± 1.5%:

CONCRETE MIX AIR CONTENT		
MAX. AGGREGATE SIZE	CONCRETE SUBJECT TO FREEZE/THAW	CONCRETE SUBJECT TO CONT. MOISTURE AND/OR DEICING CHEMICALS
3/8"	6.0%	7.5%
1/2"	5.5%	7.0%
3/4"	5.0%	6.0%
1"	4.5%	6.0%
1-1/2"	4.5%	5.5%

CONCRETE ELEMENTS SUBJECT TO FREEZE/THAW INCLUDE ALL MISC. CONCRETE, CURBS, SIDEWALKS AND EXTERIOR SLABS.

THE CONTRACTOR SHALL SUBMIT CONCRETE MIX DESIGNS ALONG WITH TEST DATA COMPLIANT WITH ACI 318-11 OSSC SECTION 1905 A MINIMUM OF TWO WEEKS PRIOR TO PLACING CONCRETE. NO WATER MAY BE ADDED TO CONCRETE IN THE FIELD UNLESS SPECIFICALLY APPROVED IN WRITING BY THE CONCRETE SUPPLIER IN CONJUNCTION WITH THE CONCRETE MIX DESIGN.

SLEEVES, OPENINGS, CONDUIT, AND OTHER EMBEDDED ITEMS NOT SHOWN ON THE STRUCTURAL DRAWINGS SHALL BE APPROVED BY THE STRUCTURAL ENGINEER BEFORE PLACING CONCRETE. CONDUITS EMBEDDED IN SLABS SHALL NOT BE LARGER IN OUTSIDE DIMENSION THAN ONE THIRD OF THE THICKNESS OF THE SLAB AND SHALL NOT BE SPACED CLOSER THAN THREE DIAMETERS ON CENTER.

WHERE NEW CONCRETE IS PLACED AGAINST EXISTING CONCRETE, THE EXISTING CONCRETE SURFACE SHALL BE CLEANED AND ROUGHENED TO A MINIMUM 1/4" AMPLITUDE PER ACI 318 SECTION 11.6.9. [PROVIDE 3/4" CHAMFERS ON ALL EXPOSED CONCRETE EDGES, UNLESS NOTED OTHERWISE.]

VERIFY ALL BLOCK OUTS WITH ARCHITECTURAL, MECHANICAL, ELECTRICAL, AND PLUMBING REQUIREMENTS.

SHORING AND RE-SHORING:
SHORING AND RE-SHORING DESIGN IS THE CONTRACTOR'S RESPONSIBILITY AND SHALL CONFORM TO 347R-14 AND ACI 347.2R-05. SHORING AND SUPPORTING FORMWORK SHALL NOT BE REMOVED FROM HORIZONTAL MEMBERS BEFORE CONCRETE STRENGTH IS AT LEAST 70 PERCENT OF DESIGN STRENGTH, AS DETERMINED BY FIELD CURED CYLINDERS. IN ADDITION, SHORING SHALL NOT BE REMOVED SOONER THAN THE FOLLOWING CUMULATIVE TIME PERIODS WITH SURROUNDING TEMPERATURE GREATER THAN OR EQUAL TO 50 DEGREES FARENHEIT:

SHORING AND RE-SHORING		
ELEMENT	MINIMUM REMOVAL TIME	COMMENTS
WALLS, COLUMNS AND BEAM SIDES	12 HOURS	WHERE FORMS ALSO SUPPORT FORMWORK FOR SLABS OR SOFFITS, THE REMOVAL TIME OF THE LATTER GOVERNS.

REINFORCING STEEL:
ALL LONGITUDINAL FLEXURE REINFORCEMENT IN ABOVE GROUND LEVEL BEAMS, COLUMNS AND SHEAR WALLS SHALL BE ASTM A706, GRADE 60. ALL OTHER DEFORMED BAR REINFORCEMENT MAY BE ASTM A615 GRADE 60 OR ASTM A706 GRADE 60. ASTM A615 REINFORCEMENT MAY BE SUBSTITUTED FOR ASTM A706 REINFORCEMENT PROVIDED THAT THE ACTUAL YIELD STRENGTH BASED ON MILL TESTS DOES NOT EXCEED 78,000 PSI AND THE RATIO OF ACTUAL TENSILE STRENGTH TO ACTUAL YIELD STRENGTH IS NOT LESS THAN 1.25. MILL TESTS CERTIFICATIONS FOR SUBSTITUTED BARS SHALL BE SUBMITTED TO THE SPECIAL INSPECTOR AND EOR PRIOR TO PLACEMENT.

SMOOTH WELDED WIRE FABRIC (WWF) SHALL BE ASTM A1064, UNLESS NOTED OTHERWISE. REINFORCING STEEL TO BE WELDED SHALL CONFORM TO ASTM A706. WELDING SHALL COMPLY WITH AWS D1.4. REINFORCING STEEL SHALL BE SECURELY TIED IN PLACE WITH #16 ANNEALED IRON WIRE.

BARS IN BEAMS AND SLABS SHALL BE SUPPORTED ON WELL-CURED CONCRETE BLOCKS OR APPROVED METAL OR PLASTIC CHAIRS, AS SPECIFIED BY THE CRSI MANUAL OF STANDARD PRACTICE, MSP-1. REINFORCING STEEL SHALL BE DETAILED IN ACCORDANCE WITH THE "ACI MANUAL OF STANDARD PRACTICE FOR DETAILING REINFORCED CONCRETE STRUCTURES," ACI 315. SHOP DRAWINGS SHALL INCLUDE ELEVATIONS OF ALL BEAMS, WALLS AND COLUMNS SHOWING BAR LOCATIONS. LAP ALL REINFORCING BARS PER THE TYPICAL LAP SPLICE LENGTH SCHEDULES, EXCEPT AS NOTED ON DRAWINGS. USE LAP LENGTH FOR SMALLER BAR WHEN SPLICING DIFFERENT BAR SIZES. BARS SPLICED WITH NONCONTACT LAPS SHALL BE SPACED NO FARTHER THAN 1/5TH THE LAP LENGTH OR 6 INCHES. MECHANICAL SPLICES NOTED ON THE PLANS SHALL BE DAYTON SUPERIOR BAR-LOCK (ICC ESR-2495) OR TAPERLOCK COUPLERS (IAPMO ES-0319) OR APPROVED WITH A CURRENT EVALUATION APPROVAL REPORT.

TYP. WALL AND SLAB LAP SPLICE LENGTH SCHEDULE (IN.)				
BAR SIZE	WALL VERTICAL AND SLAB BOTTOM BARS (NOTE 7)		WALL HORIZONTAL AND SLAB TOP BARS (NOTE 7)	
	f'c = 3,000 PSI	f'c = 4,000 PSI	f'c = 3,000 PSI	f'c = 4,000 PSI
#3	14	12	18	16
#4	22	20	28	26
#5	32	28	42	36
#6	44	38	58	50
#7	70	62	92	78
#8	86	74	112	98
#9	104	92	136	118
#10	126	108	164	142
#11	148	128	192	166

TYP. FOUNDATION LAP SPLICE LENGTH SCHEDULE (IN.)				
BAR SIZE	BOTTOM BARS (NOTE 7)		TOP BARS (NOTE 7)	
	f'c = 3,000 PSI	f'c = 4,000 PSI	f'c = 3,000 PSI	f'c = 4,000 PSI
#3	14	12	18	16
#4	18	16	24	20
#5	22	20	30	26
#6	28	24	36	32
#7	44	40	58	50
#8	54	48	70	62
#9	62	54	80	70
#10	70	60	90	78
#11	78	68	104	90

TABLE NOTES:
1. MINIMUM LAP SPLICES NOTED ARE FOR NON-LATERAL LOAD RESISTING ELEMENTS. FOR REBAR LAPS SPLICES AT LATERAL LOAD RESISTING ELEMENTS, REFERENCE PLANS AND ELEVATIONS.
2. ASTM A615 OR ASTM A706, GRADE 60 DEFORMED REINFORCING BARS
3. MINIMUM CLEAR COVER AND BAR SPACING of 4db TO BE PROVIDED.
4. NORMAL WEIGHT CONCRETE, FOR LIGHT-WEIGHT CONCRETE MULTIPLY TABLE VALUES BY 1.3.
5. UNCOATED BARS, FOR EPOXY-COATED BARS MULTIPLY TABLE VALUES BY 1.5.
6. COMBINATIONS OF EFFECTS DUE TO CONCRETE STRENGTH, CONCRETE WEIGHT, AND EPOXY COATING ARE CUMULATIVE.
7. SLAB, FOUNDATION AND MAT TOP BARS ARE BARS CAST ABOVE MORE THAN 12" OF FRESH CONCRETE. ALL OTHER SLAB BARS MAY BE CONSIDERED BOTTOM BARS.

REINFORCING STEEL SHALL HAVE PROTECTION AS FOLLOWS:

REINFORCING STEEL CONCRETE COVER	
USE	CLEAR COVER
BEAMS, JOISTS AND COLUMNS	1-1/2" (TO STIRRUPS OR TIES)
SLABS	1"
WALLS: INTERIOR FACES	3/4"
WALLS: EXPOSED TO EARTH OR WEATHER	1-1/2" (#5 AND SMALLER)
	2" (#6 AND LARGER)
CONCRETE CAST AGAINST AND EXPOSED TO EARTH	3"

Revisions	Date

pka ARCHITECTS

PETERSEN KOLBERG & ASSOCIATES
ARCHITECTS/PLANNERS
6969 SW Hampton Street
Portland, OR 97223
phone: 503-968-6800
fax: 503-968-6860
www.pkaarchitects.com

STRUCTURAL REGISTERED PROFESSIONAL ENGINEER OREGON BRADLY MOYES
EXPIRES 12-31-16

DEPARTMENT OF VETERANS AFFAIRS
SOUTHERN OREGON REHABILITATION CENTER & CLINICS
8495 Crater Lake Highway, White City, Oregon 97503-3012

kpff
111 SW Fifth Ave., Suite 2500
Portland, OR 97204
O: 503.227.3251
F: 503.227.7980
www.kpff.com

Drawing Title: GENERAL STRUCTURAL NOTES

SPECIALTY CARE BUILDING - 201B

Approved: Proj Eng | Approved: Infect Cont | Approved: Chief P&O | Approved: Chief M&R | Approved: Safety Mgr.
Approved: Service Chief | Approved: Chief Facilities Mgmt | Approved: VAMC Director

Building No.: Building 201B | Chkd By/Proj. Mgr: NR | Drawn By: CB | Location

Date: 11/27/15
Project No.: 131207
Drawing No.: S0.02
Dwg. of

US DEPARTMENT OF VETERANS AFFAIRS

GENERAL STRUCTURAL NOTES

CONCRETE WALL REINFORCING:
CONCRETE WALL REINFORCEMENT TO BE AS FOLLOWS, U.N.O.:

CONCRETE WALL REINFORCING			
WALL THICKNESS	HORIZONTAL BARS	VERTICAL BARS	LOCATION
6"	#4 @ 12" o.c.	#4 @ 12" o.c.	AT CL OF WALL
8"	#4 @ 10" o.c.	#4 @ 10" o.c.	AT CL OF WALL
10"	#4 @ 16" o.c.	#4 @ 12" o.c.	AT EACH FACE
12"	#4 @ 12" o.c.	#4 @ 12" o.c.	AT EACH FACE

CONCRETE REINFORCING DETAILS:

CONTINUE HORIZONTAL WALL BARS THROUGH PILASTERS, COLUMNS AND INTERSECTING WALLS. AT SLAB AND WALL OPENINGS PROVIDE A MINIMUM OF TWO #5 BARS OVER, UNDER AND AT THE SIDES OF THE OPENINGS. EXTEND THESE BARS LAP DISTANCE OR A MINIMUM OF 2'-0" PAST THE OPENING. PROVIDE ONE #5 FOR SINGLE-LAYER REINFORCING AND TWO #5 FOR DOUBLE-LAYER REINFORCING, 4'-0" LONG, DIAGONALLY AT EACH CORNER OF ALL OPENINGS. REFER TO TYPICAL DETAILS FOR DISPOSITION OF CORNER BARS AND BARS IN SMALL WALL SECTIONS. SLAB BARS SHALL BE HOOKED INTO WALLS, OR HOOKED DOWELS SHALL BE PROVIDED TO MATCH SLAB REINFORCING. PROVIDE TWO #4, 4'-0" LONG DIAGONALLY AT EACH RE-ENTRANT CORNER IN SLABS. PROVIDE HOOKED DOWELS FROM FOOTINGS TO MATCH VERTICAL WALL REINFORCING, UNLESS NOTED OTHERWISE.

CONCRETE ACCESSORIES:

HEADED SHEAR STUDS SHALL BE NELSON HEADED ANCHORS WITH FLUXED ENDS (ICC ESR-2856) OR APPROVED. DEFORMED BAR ANCHORS (D.B.A.) SHALL BE NELSON, TYPE D2L (ICC ESR-2907), OR APPROVED. STUDS AND D.B.A. SHALL BE AUTOMATICALLY END-WELDED WITH THE MANUFACTURER'S STANDARD EQUIPMENT IN ACCORDANCE WITH THEIR RECOMMENDATIONS.

POST-INSTALLED ANCHORS SHALL BE OF THE TYPE AND PRODUCT SPECIFIED ON THE DRAWINGS OR AS FOLLOWS:

POST INSTALLED CONCRETE ANCHORS	
TYPE	APPROVED ANCHORS
EXPANSION	SIMPSON STRONG-BOLT 2 (ICC ESR-3037)
CONCRETE SCREW	SIMPSON TITEN HD (ICC ESR-2713)
EPOXY ADHESIVE	SIMPSON SET-XP (ICC ESR-2508)

ALL ANCHORS SHALL BE INSTALLED IN STRICT CONFORMANCE WITH THE MANUFACTURER'S RECOMMENDATIONS AND PRODUCT EVALUATION REPORTS. REQUESTS FOR ANCHOR SUBSTITUIONS SHALL BE SUBMITTED TO THE EOR IN WRITING ALONG WITH EVIDENCE OF EQUAL OR GREATER CAPACITY TO THE SPECIFIED CONNECTION. DO NOT CUT REINFORCING IN NEW OR EXISTING CONCRETE DURING INSTALLATION.

ANCHORS EXPOSED TO EARTH OR WEATHER SHALL BE PROTECTED FROM CORROSION BY HOT-DIP GALVANIZING OR USE OF STAINLESS STEEL. PERMANENTLY EXPOSED EMBEDDED PLATES AND ANGLES SHALL BE HOT-DIPPED GALVANIZED AFTER FABRICATION, UNLESS NOTED OTHERWISE. NO LOADS OR WELDS SHALL BE PLACED ON EMBEDDED PLATES OR ANGLES FOR A MINIMUM OF 7 DAYS AFTER CASTING.

STRUCTURAL STEEL:
STRUCTURAL STEEL SHALL BE:

STRUCTURAL STEEL	
MATERIAL GRADE	SHAPE
ASTM A992, GRADE 50	WIDE FLANGE SHAPES
ASTM A572, GRADE 50	PLATES WHERE NOTED
ASTM A36	CHANNELS, PLATES AND ANGLES, EXCEPT AS NOTED
ASTM A500, GRADE B (FY=46KSI)	HOLLOW STRUCTURAL SECTIONS (TUBES)
ASTM A53, GRADE B (FY=35 KSI)	PIPES

DESIGN, FABRICATION, AND ERECTION SHALL BE IN ACCORDANCE WITH THE "AISC SPECIFICATION FOR THE DESIGN, FABRICATION, AND ERECTION OF STRUCTURAL STEEL FOR BUILDINGS" WITH "COMMENTARY" AND THE "CODE OF STANDARD PRACTICE", WITH EXCEPTIONS NOTED IN SPECIFICATIONS. REFERENCE SPECIFICATIONS FOR ADDITIONAL REQUIREMENTS FOR MEMBERS PART OF THE SEISMIC LOAD RESISTING SYSTEM (SLRS).

BOLTS SHALL CONFORM TO THE ASTM AND RCSC SPECIFICATIONS FOR JOINTS USING A325 OR A490 HIGH STRENGTH BOLTS. BOLTS SHALL BE SNUG-TIGHT UNLESS NOTED OTHERWISE. HIGH STRENGTH BOLTS USED AS PART OF THE SEISMIC LOAD RESISTING SYSTEM (SLRS) NOTED ON THE DRAWINGS AND DETAILS SHALL BE FULLY TENSIONED AND ALL FAYING SURFACES SHALL BE PREPARED AS REQUIRED FOR CLASS A OR BETTER SLIP-CRITICAL JOINTS.

WELDING SHALL CONFORM TO THE AWS CODES FOR ARC AND GAS WELDING IN BUILDING CONSTRUCTION. WELDING SHALL BE PERFORMED IN ACCORDANCE WITH A WELDED PROCEDURE SPECIFICATION (WPS) AS REQUIRED IN AWS D1.1 AND APPROVED BY THE STRUCTURAL ENGINEER. THE WPS VARIABLES SHALL BE WITHIN THE PARAMETERS ESTABLISHED BY THE FILLER-METAL MANUFACTURER. FOR MEMBERS INCLUDED IN THE SEISMIC LOAD RESISTING SYSTEM (SLRS), REQUIREMENTS OF AWS D1.8 (SEISMIC SUPPLEMENT) SHALL APPLY

ALL WELDS USED IN MEMBERS AND CONNECTIONS THAT ARE PART OF THE SEISMIC LOAD RESISTING SYSTEM (SLRS) SHALL BE MADE WITH A FILLER METAL THAT HAS A MINIMUM CHARPY V-NOTCH (CVN) TOUGHNESS OF 20 FT-LBS AT 0 DEGREES F, AS DETERMINED BY AWS CLASSIFICATION OR MANUFACTURER CERTIFICATION. ALL COMPLETE JOINT PENETRATION WELDS DESIGNATED AS DEMAND CRITICAL SHALL BE MADE WITH FILLER METAL THAT HAS A MINIMUM CVN TOUGHNESS OF 20 FT-LBS AT MINUS 20 DEGREES F, AND 40 FT-LBS AT 70 DEGREES F. FOR COMPLETE JOINT PENETRATION WELDS ASSOCIATED WITH MEMBER SPLICES AND CONNECTIONS NOT PART OF THE SLRS, WELDS SHALL BE MADE WITH FILLER METAL THAT HAS A MINIMUM CVN TOUGHNESS OF 20 FT-LBS AT 40 DEGREES F.

FOR MEMBERS AND CONNECTIONS THAT ARE PART OF THE SEISMIC LOAD RESISTING SYSTEM, DISCONTINUITIES CREATED BY ERRORS OR BY FABRICATION OR ERECTION OPERATIONS, SUCH AS TACK WELDS, ERECTION AIDS, AIR-ARC GOUGING, AND FLAME CUTTING, SHALL BE REPAIRED AS REQUIRED BY THE STRUCTURAL ENGINEER.

WELDS SHALL BE MADE USING E70XX ELECTRODES AND SHALL BE 3/16" MINIMUM, UNLESS OTHERWISE NOTED. WELDING SHALL BE BY AWS CERTIFIED WELDERS.

PROVIDE WEEP HOLES AT EXTERIOR CLOSED SECTIONS WHERE MOISTURE MAY ACCUMULATE.

STEEL DECK:

STEEL FLOOR DECK SHALL BE A COMPOSITE TYPE WITH RIBS AT 12" O.C. OF THE SIZE AND GAUGE SHOWN ON THE PLANS. STEEL FLOOR DECK SHALL BE VENTED. STEEL ROOF DECK SHALL BE 1-1/2" TYPE B OR 3" TYPE N OF THE GAUGE SHOWN ON THE PLANS. STEEL DECK SHALL CONFORM TO ASTM A653 DESIGNATION SS, GRADE 33 MINIMUM WITH 39 KSI MINIMUM YIELD STRENGTH. THE GALVANIZED COATING SHALL CONFORM TO ASTM A653, G 60 (G90 WHERE LEFT PERMANENTLY EXPOSED TO WEATHER).

MINIMUM DECK GAUGES ARE SHOWN ON PLANS AND ARE BASED ON 3-SPAN, UN-SHORED CONDITIONS. FOR OTHER SPAN CONDITIONS, DECK MANUFACTURER SHALL EVALUATE SHORING REQUIREMENTS. MINIMUM PROPERTIES SHALL BE AS FOLLOWS:

FLOOR DECK		
DECK SIZE	IN^4/FT.	IN^3/FT.
3"x18 GAUGE	1.203	0.767
3"x20 GAUGE	0.896	0.534

ROOF DECK		
DECK SIZE	IN^4/FT.	IN^3/FT.
3"x18 GAUGE TYPE N	1.273	0.945

FLOOR AND ROOF DECK WELDING SHALL BE AS FOLLOWS:

FLOOR/ROOF DECK WELDING		
AT TRANSVERSE AND PERIMETER SUPPORTS	AT LONGITUDINAL SUPPORTS	AT SIDE LAP CONNECTIONS
1/2" EFFECTIVE DIAMETER PUDDLE WELDS @ 12" o.c.	1/2" EFFECTIVE DIAMETER PUDDLE WELDS @ 16" o.c.	BUTTON PUNCH OR 11/2" TOP OR SIDE SEAM WELD @ 36" o.c.

ROOF DECK SHALL BE ATTACHED TO SUPPORTS AND AT SIDE LAPS AS SHOWN IN THE SCHEDULE ABOVE. DO NOT HANG OR SUSPEND STRUCTURAL ITEMS DIRECTLY FROM ROOF DECK. NON-STRUCTURAL ITEMS SUSPENDED FROM THE DECK SHALL BE REVIEWED AND APPROVED BY THE ARCHITECT AND STRUCTURAL ENGINEER PRIOR TO INSTALLATION.

STEEL FRAMING DEFLECTION DURING CONCRETE OVER METAL DECK PLACEMENT:

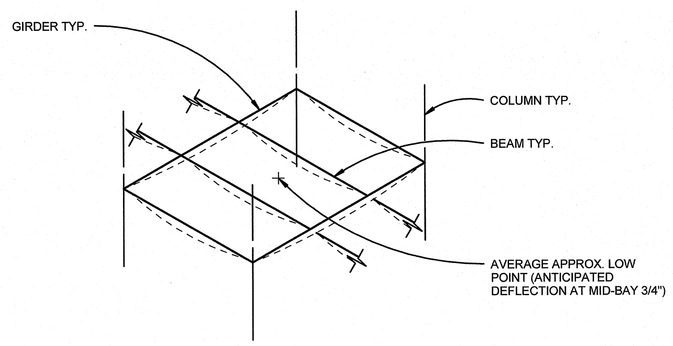

METAL DECK, BEAMS, AND GIRDERS WILL DEFLECT DURING PLACEMENT OF CONCRETE. CONTRACTOR SHALL ACCOUNT FOR THIS DISPLACEMENT BY PROVIDING ADDITIONAL CONCRETE AT CENTER OF SPANS. THE INTENT IS TO CONSTRUCT LEVEL FLOORS WITHIN EACH BAY, OR STRAIGHT SLOPES ON ROOF BAYS, AND TO PROVIDE THE MINIMUM THICKNESS OF CONCRETE OVER METAL DECK THAT IS CALLED FOR PLANS.

LIGHT GAUGE METAL FRAMING:

METAL STUDS SHALL BE C-STUDS WITH A MINIMUM YIELD STRENGTH OF 33,000 PSI FOR 33 AND 43 MIL AND 50,000 PSI FOR 54, 68 AND 97 MIL THICKNESSES. GAUGE PLATE AND STRAPS SHALL HAVE A MINIMUM YIELD STRENGTH OF 30,000 PSI FOR 33 AND 43 MIL AND 50,000 PSI FOR 54, 68 AND 97 MIL THICKNESSES. LIGHT GAUGE FRAMING SHALL BE OF THE SIZE, GAUGE, AND SPACING SHOWN ON THE DRAWINGS.

THE AMERICAN IRON AND STEEL INSTITUTE AND STEEL STUD MANUFACTURES ASSOCIATION (SSMA) STANDARDS ARE USED IN THIS PACKAGE. PRODUCTS USED SHALL MEET OR EXCEED AISI STANDARDS AND ARE DESIGNATED BY:

362 S 162 - 33

WEB SIZE — THICKNESS (MILS)
MEMBER TYPE — FLANGE SIZE

PROVIDE BRIDGING ADEQUATE TO DEVELOP THE FULL MOMENT CAPACITY OF STUDS IN CONFORMANCE WITH THE STEEL STUD MANUFACTURERS ASSOCIATION'S (SSMA) RECOMMENDATIONS.

ALL FIELD CUTTING OF STUDS MUST BE BY SAWING, SHEARING, OR PLASMA CUTTING. OTHER CUTTING METHODS OF COLD-FORMED MEMBERS ARE UNACCEPTABLE.

NO NOTCHING OR COPING OF STUDS IS ALLOWED, UNLESS NOTED OTHERWISE.

ENDS OF STUDS MUST SEAT FIRMLY IN RUNNER TRACK TO PROVIDE FULL STUD BEARING.

SPLICING OF WALL STUDS OR HEADERS IS NOT ALLOWED, UNLESS NOTED OTHERWISE.

CONTRACTOR TO ENSURE PUNCH OUT ALIGNMENT WHEN ASSEMBLING LATERAL BRACING AND FIELD CUTTING STUDS TO LENGTH.

ALL HEADERS/BUILT-UP BEAMS ARE TO BE CONSTRUCTED WITH UNPUNCHED MATERIAL ONLY.

LIGHT GAUGE FRAMING CONNECTIONS SHALL BE AS FOLLOWS:

LIGHT GAUGE METAL FRAMING CONNECTIONS	
FASTENER	PRODUCT
SCREWS	ELCO DRIL-FLEX OR HILTI KWIK-FLEX (ESR-3332)
PAF'S	HILTI X-U (ESR-2269)

FOR SCREWS, PROVIDE 3/4" MINIMUM CLEARANCE FROM ALL EDGES AND 3/4" MINIMUM CENTER TO CENTER SPACING.
FASTENERS OF COMPARABLE SPECIFICATIONS AND LOAD CAPACITIES MAY BE SUBMITTED FOR APPROVAL.

WELDING SHALL CONFORM WITH AWS D1.3.

RIGID POLYSTYRENE GEOFOAM (EPS):

EPS GEOFOAM USED IN OVER-FRAMING APPLICATIONS SHALL CONFORM TO ASTM D6817 WITH THE FOLLOWING PROPERTIES:

AT TYPICAL FLOOR AREAS, USE GEOFOAM TYPE EPS19 WITH A MINIMUM COMPRESSIVE RESISTANCE OF 5.8 PSI AT 1% DEFORMATION.

AT LOADING DOCKS, SIDEWALKS AND OTHER HEAVILY LOADED AREAS, USE GEOFOAM TYPE EPS29 WITH A MINIMUM COMPRESSIVE RESISTANCE OF 10.9 PSI AT 1% DEFORMATION.

Revisions | Date

pka ARCHITECTS
PETERSEN KOLBERG & ASSOCIATES ARCHITECTS/PLANNERS
6969 SW Hampton Street
Portland, OR 97223
phone: 503-968-6800
fax: 503-968-6860
www.pkaarchitects.com

STRUCTURAL REGISTERED PROFESSIONAL ENGINEER OREGON JULY 13, 2004 M. BRADLY MOYER
EXPIRES 12-31-16

DEPARTMENT OF VETERANS AFFAIRS
SOUTHERN OREGON REHABILITATION CENTER & CLINICS
8495 Crater Lake Highway, White City, Oregon 97503-3012

kpff
111 SW Fifth Ave., Suite 2500
Portland, OR 97204
O: 503.227.3251
F: 503.227.7980
www.kpff.com

Drawing Title: GENERAL STRUCTURAL NOTES

SPECIALTY CARE BUILDING - 201B

Date: 11/27/15
Project No.: 131207

Approved: Proj Eng | Approved: Infect Cont | Approved: Chief P&O | Approved: Chief M&R | Approved: Safety Mgr.
Approved: Service Chief | Approved: Chief Facilities Mgmt | Approved: VAMC Director

Building No.: Building 201B | Chkd By/Proj. Mgr: NR | Drawn By: CB | Location

Drawing No.: S0.03
Dwg. of

US DEPARTMENT OF VETERANS AFFAIRS

SPECIAL INSPECTION NOTES

TABLE 1 - REQUIRED GEOTECHNICAL SPECIAL INSPECTIONS

SYSTEM OR MATERIAL	OSSC CODE REFERENCE	CODE OR STANDARDS REFERENCE	INSPECTION FREQUENCY (NOTE 6) CONTINUOUS	INSPECTION FREQUENCY (NOTE 6) PERIODIC	REMARKS
SOILS					
VERIFY MATERIALS BELOW FOOTINGS ARE ADEQUATE TO ACHIEVE THE DESIGN BEARING CAPACITY	1705.6	GEOTECHNICAL REPORT		X	BY THE GEOTECHNICAL ENGINEER
VERIFY EXCAVATIONS ARE EXTENDED TO PROPER DEPTH AND HAVE REACHED PROPER MATERIAL				X	
PERFORM CLASSIFICATION AND TESTING OF CONTROLLED FILL MATERIALS				X	
VERIFY USE OF PROPER MATERIALS, DENSITIES AND LIFT THICKNESSES DURING PLACEMENT AND COMPACTION OF CONTROLLED FILL			X		
PRIOR TO PLACEMENT OF CONTROLLED FILL, OBSERVE SUBGRADE AND VERIFY THAT SITE HAS BEEN PREPARED PROPERLY				X	

TABLE 2 - REQUIRED STRUCTURAL SPECIAL INSPECTIONS

SYSTEM OR MATERIAL	OSSC CODE REFERENCE	CODE OR STANDARD REFERENCE	INSPECTION FREQUENCY (NOTE 6) CONTINUOUS	INSPECTION FREQUENCY (NOTE 6) PERIODIC	REMARKS
FABRICATORS					
FABRICATORS	1704.2.5			X	SPECIAL INSPECTION IS REQUIRED FOR STRUCTURAL LOAD-BEARING MEMBERS AND ASSEMBLIES FABRICATED ON THE PREMISES OF A FABRICATOR'S SHOP PER TABLE 2 AND AS REQUIRED ELSEWHERE IN THE SPECIAL INSPECTION PROGRAM. THE SPECIAL INSPECTOR SHALL VERIFY THAT THE FABRICATOR MAINTAINS DETAILED FABRICATION AND QUALITY CONTROL PROCEDURES AND SHALL REVIEW FOR COMPLETENESS AND ADEQUACY RELATIVE TO THE CODE REQUIREMENT. REFERENCE SECTION 1704.2.5.2 FOR APPROVED FABRICATOR EXCEPTION.
DEFERRED SUBMITTALS					
DEFERRED SUBMITTALS			X	X	SPECIAL INSPECTION REQUIREMENTS FOR DEFERRED SUBMITTAL ITEMS TO BE SPECIFIED BY THE SYSTEMS ENGINEER AND INCLUDED WITH DEFERRED SUBMITTAL DOCUMENTS.
CONCRETE					
GENERAL	1705.3 1901.4	ACI 318 1.3			SPECIAL INSPECTIONS OF CONCRETE SHALL CONFORM TO THE REQUIREMENTS OF SECTION 1705.3 OF THE OSSC AND SECTION 1.3 OF ACI 318.
REINFORCING STEEL PLACEMENT	1910.4 1901.3.2	ACI 318 3.5 ACI 318 7.1 TO 7.7		X	REINFORCING TO COMPLY WITH ALL CODE PROTECTION, SPACING AND TOLERANCE LIMITS.
WELDING REINFORCING STEEL					
1. VERIFICATION OF WELDABILITY OF REINFORCING STEEL OTHER THAN ASTM A 706	1705.2.2 1903.1	AWS D1.4 ACI 318: 3.5.2		X	
2. SHEAR REINFORCEMENT			X		
3. OTHER REINFORCING STEEL				X	
PLACEMENT OF CAST-IN-PLACE BOLTS	1908.5 1909.1		X		ALL BOLTS VISUALLY INSPECTED
VERIFYING USE OF REQUIRED MIX DESIGN(S)	1904.2 1910.2 1910.3	ACI 318, CH. 4 ACI 318 5.2-5.4		X	
CONCRETE PLACEMENT, NON-SHRINK GROUT		ACI 318 5.9-5.10	X		
CONCRETE PLACEMENT AT COMPOSITE SLABS		ASCE 9, CH. 3	X		
CONCRETE CURING	1910.9	ACI 318 5.11-5.13		X	
VERIFICATION OF FORMWORK		ACI 318 6.1.1		X	SPECIAL INSPECTIONS APPLY TO SHAPE, LOCATION AND DIMENSIONS OF THE CONCRETE MEMBER BEING FORMED
EMBEDDED ITEMS IN CONCRETE				X	ALL NON-STRUCTRAL EMBEDDED ITEMS, SUCH AS CONDUITS, PIPES AND SLEEVES, SHALL BE REVIEWED FOR CONFORMANCE WITH STRUCTURAL DOCUMENTS FOR SIZE, SPACING, LOCATION, EDGE DISTANCE AND TRIM REINFORING.
REINFORCING STEEL MECHANICAL COUPLERS, TERMINATORS AND FORMSAVERS		ICC EVALUATION REPORTS		X	
STEEL					
REFERENCE TABLE 2A FOR REQUIRED SPECIAL INSPECTIONS FOR STEEL					
STAINLESS STEEL					
FABRICATION OF STAINLESS STEEL ELEMENTS	1705.1.1			X	REFER TO INSPECTION OF FABRICATOR REQUIREMENTS
MATERIAL VERIFICATION OF STAINLESS STEEL	1705.1.1			X	CERTIFIED MILL TEST REPORTS
MATERIAL VERIFICATION OF BOLTS	1705.1.1			X	MANUFACTURER'S CERTIFIED TEST REPORTS
MATERIAL VERIFICATION OF WELD FILLER METALS				X	MANUFACTURER'S CERTIFIED TEST REPORTS
VERIFYING USE OF PROPER WPS'S	1705.1.1	AWS D1.6 SECTION 6		X	RETAIN A RECORD OF WELDING PROCEDURE SPECIFICATIONS
VERIFYING WELDER QUALIFICATIONS				X	RETAIN A RECORD OF QUALIFICATION CARDS
COMPLETE AND PARTIAL PENETRATION GROOVE WELDS			X		ALL WELDS VISUALLY INSPECTED PER AWS D1.6 6.28.1
MULTIPASS FILLET WELDS			X		
SINGLE PASS FILLET WELDS				X	
COLD-FORMED STEEL FRAMING					
MATERIAL VERIFICATION OF WELD FILLER METALS		AWS D1.3 SECTION 7		X	MANUFACTURER'S CERTIFIED TEST REPORTS
VERIFYING USE OF PROPER WPS'S				X	RETAIN A RECORD OF WELDING PROCEDURE SPECIFICATIONS
VERIFYING WELDER QUALIFICATIONS	1705.2.2.1			X	RETAIN A RECORD OF QUALIFICATION CARDS
COLD FORMED ROOF AND FLOOR DECKS	1705.2.2.1.1	AWS D1.3		X	WELDING INSPECTION AND INSPECTOR QUALIFICATION
WELDED FRAMING CONNECTIONS	1705.2.2.1	AWS D1.3 SECTION 7		X	ALL WELDS VISUALLY INSPECTED PER AWS D1.3 7.1
COLD-FORMED STEEL TRUSSES SPANNING 60 FT OR GREATER	1705.2.2.2			X	VERIFY TEMPORARY INSTALLATION OF RESTRAINT/BRACES AND PERMANENT INDIVIDUAL TRUSS MEMBERS RESTRAINT/BRACES ARE INSTALLED IN ACCORDANCE WITH APPROVED TRUSS SUBMITTAL.
POST INSTALLED CONCRETE ANCHORS					
POST INSTALLED ANCHORS INSTALLATION IN HARDENED CONCRETE AND COMPLETED MASONRY	1908.5 1909.1	ACI 318: 1.3, 3.8.6		X (NOTE 8)	INSPECTION REQUIREMENTS PER ICC EVALUATION REPORT

TABLE 2A - REQUIRED STRUCTURAL STEEL SPECIAL INSPECTIONS

SYSTEM OR MATERIAL	OSSC CODE REF.	CODE OR STANDARD REFERENCE	INSPECTION (NOTES 5 AND 6) CONTINUOUS	INSPECTION (NOTES 5 AND 6) PERIODIC	INSPECTION (NOTES 5 AND 6) OBSERVE	INSPECTION (NOTES 5 AND 6) PERFORM	REMARKS
STEEL							
CONTRACTOR QUALITY CONTROL REQUIREMENTS		AISC 360 CHAPTER N			X	X	CONTRACTOR TO PROVIDE QUALITY CONTROL FOR ALL ITEMS INDICATED TO BE OBSERVE AND/OR PERFORM IN TABLE BELOW
STEEL FABRICATION							
FABRICATION OF STRUCTURAL ELEMENTS	1704.2.5.2	AISC 360 N2		X			REFER TO INSPECTION OF FABRICATOR REQUIREMENTS
MATERIAL VERIFICATION OF STRUCTURAL STEEL	1705.2.1 2203.1 TABLE 1705.2	ASTM A6 ASTM STANDARDS SPECIFIED IN CONSTRUCTION DOCUMENTS AISC 360 A3.1 AISC 360 N3.2		X			CERTIFIED MILL TEST REPORTS
FOR OTHER STEEL, IDENTIFICATION MARKINGS TO CONFORM TO ASTM STANDARDS SPECIFIED IN THE APPROVED CONSTRUCTION DOCUMENTS	TABLE 1705.2	APPLICABLE ASTM STANDARDS		X			MANUFACTURER'S CERTIFIED TEST REPORTS
MATERIAL VERIFICATION OF HIGH STRENGTH BOLTS, NUTS, AND WASHERS		AISC 360 A3.3 AISC 360 N3.2 ASTM STANDARDS SPECIFIED IN CONSTRUCTION DOCUMENTS RCSC 2.1		X			MANUFACTURER'S CERTIFIED TEST REPORTS
MATERIAL VERIFICATION OF ANCHOR BOLTS AND THREADED RODS		AISC 360 A3.4 AISC 360 N3.2 ASTM STANDARDS SPECIFIED IN CONSTRUCTION DOCUMENTS		X			MANUFACTURER'S CERTIFIED TEST REPORTS
MATERIAL VERIFICATION OF WELD FILLER METALS	TABLE 1705.2	AISC 360 A3.5 AISC 360 N3.2 APPLICABLE AWS A5 DOCUMENTS		X			MANUFACTURER'S CERTIFIED TEST REPORTS
STRUCTURAL STEEL WELDING							
VERIFYING USE OF PROPER WPS'S		AISC 360 N3.2					RETAIN A RECORD OF WELDING PROCEDURE SPECIFICATIONS
VERIFYING WELDER QUALIFICATIONS	1705.2.2.1			X			RETAIN A RECORD OF QUALIFICATION CARDS
COMPLETE AND PARTIAL JOINT PENETRATION GROOVE WELDS	TABLE 1705.2	AWS D1.1 SECTION 6	X				
MULTIPASS FILLET WELDS			X				
SINGLE PASS FILLET WELDS GREATER THAN 5/16"			X				ALL WELDS VISUALLY INSPECTED PER AWS D1.16.9
PLUG AND SLOT WELDS			X				
SINGLE PASS FILLET WELDS LESS THAN OR EQUAL TO 5/16"				X			
WELDING STAIR AND RAILING SYSTEMS	1705.2(2.5)	AWS D1.1 SECTION 6		X			ALL WELDS VISUALLY INSPECTED PER AWS D1.1 6.9
VERIFICATION OF FRAME JOINT DETAILS INCLUDING MEMBER AND COMPONENT LOCATIONS, BRACING, AND STIFFENERS	TABLE 1705.2	AISC 360 N5.7		X			
REINFORCING STEEL WELDING							SEE CONCRETE SECTION
STEEL ELEMENTS OF COMPOSITE CONSTRUCTION							
INSTALLATION OF COMPOSITE SLAB DECKING	1705.1.1	ICC EVALUATION REPORT ASCE 9 CHAPTER 3		X			SPECIAL INSPECTIONS APPLY TO DECKING TYPE, DEPTH, GAUGE, AND FASTENING
INSTALLATION OF ROOF DECKING	1705.1.1	ICC EVALUATION REPORT		X			SPECIAL INSPECTIONS APPLY TO DECKING TYPE, DEPTH AND GAUGE, POWER ACTUATED FASTENERS, SCREWS, PROPRIETARY SIDE SEAM ATTACHMENTS, AND BUTTON PUNCHES AND SHEAR CONNECTORS
FLOOR AND ROOF DECK WELDS	TABLE 1705.2	AWS D1.3 SECTION 7		X			ALL WELDS INSPECTED PER AWS D1.3 7.1
WELDING STUDS IN STRUCTURAL DIAPHRAGMS	1705.2 (2.3 and 3)	AISC 360 N6 AWS D1.1 SECTION 7		X			CONTINUOUS INSPECTION IS NOT REQUIRED WHEN WELDS INSTALLED WITH AN AUTOMATICALLY TIMED STUD WELDING MACHINE PER SECTION 7 OF AWS D1.1(ONLY PERIODIC), 1705.2(3) ALL WELDS VISUALLY INSPECTED PER AWS D1.1 7.8.1
PLACEMENT AND INSTALLATION OF STEEL DECK	1705.2	AISC 360 TABLE N6.1				X	
PLACEMENT AND INSTALLATION OF STEEL HEADED STUD ANCHORS						X	
DOCUMENT ACCEPTANCE OR REJECTION OF STEEL ELEMENTS						X	
HIGH-STRENGTH BOLTING							
SNUG-TIGHT HIGH STRENGTH BOLT INSTALLATION	1705.2.1	RCSC SPECIFICATION FOR STRUCTURAL JOINTS USING ASTM A325 OR A490 BOLTS SECTION 9 AISC 360 SECTION M2.5		X			ALL CONNECTIONS VISUALLY INSPECTED AND VERIFIED SNUG
PRETENSIONED HIGH STRENGTH BOLT INSTALLATION USING TURN-OF-THE-NUT METHOD WITH MATCH MARKING, DIRECT TENSION INDICATOR METHOD, OR TWIST-OFF TYPE TENSION CONTROL BOLT METHOD	1705.2.1			X			ALL CONNECTIONS VISUALLY INSPECTED. CONNECTIONS USING DIRECT TENSION INDICATORS, ALL BOLTS SHALL BE INSPECTED AFTER SNUGGING AND AFTER PRETENSIONING
PRETENSIONED HIGH STRENGTH BOLT INSTALLATION USING TURN-OF-THE-NUT METHOD WITHOUT MATCH MARKING OR CALIBRATED WRENCH METHOD	1705.2.1		X				ALL CONNECTIONS VISUALLY INSPECTED
INSPECTION TASKS PRIOR TO BOLTING	1705.2	AISC 360 TABLE N5.6-1					
MANUFACTURER'S CERTIFICATIONS AVAILABLE FOR FASTENER MATERIALS						X	
FASTENERS MARKED IN ACCORDANCE WITH ASTM REQUIREMENTS					X		
PROPER FASTENERS SELECTED FOR THE JOINT DETAIL (GRADE, TYPE, BOLT LENGTH, IF THREADS ARE TO BE EXCLUDED FROM THE SHEAR PLANE)					X		
PROPER BOLTING PROCEDURE SELECTED FOR JOINT DETAIL					X		
CONNECTING ELEMENTS, INCLUDING THE APPROPRIATE FAYING SURFACE CONDITION AND HOLE PREPARATION, IF SPECIFIED, MEET APPLICABLE REQUIREMENTS					X		
PRE-INSTALLATION VERIFICATION TESTING BY INSTALLATION PERSONNEL OBSERVED AND DOCUMENTED FOR FASTENER ASSEMBLIES AND METHODS USED					X		
PROPER STORAGE PROVIDED FOR BOLTS, NUTS, WASHERS AND OTHER FASTENER COMPONENTS					X		
INSPECTION TASKS DURING BOLTING	1705.2	AISC 360 TABLE N5.6-2 RCSC SPECIFICATION FOR STRUCTURAL JOINTS USING ASTM A325 OR A490 BOLTS SECTION 9					
FASTENER ASSEMBLIES, OF SUITABLE CONDITION, PLACED IN ALL HOLES AND WASHERS (IF REQUIRED) ARE POSITIONED AS REQUIRED					X		
JOINT BROUGHT TO THE SNUG-TIGHT CONDITION PRIOR TO THE PRETENSIONING OPERATION					X		
FASTENER COMPONENT NOT TURNED BY THE WRENCH PREVENTED FROM ROTATING					X		
FASTENERS ARE PRETENSIONED IN ACCORDANCE WITH THE RCSC SPECIFICATION, PROGRESSING SYSTEMATICALLY FROM THE MOST RIGID POINT TOWARD THE FREE EDGES					X		
INSPECTION TASKS AFTER BOLTING	1705.2	AISC 360 TABLE N5.6-3					
DOCUMENT ACCEPTANCE OR REJECTION OF BOLTED CONN.						X	

Revisions	Date

pka ARCHITECTS

PETERSEN KOLBERG & ASSOCIATES
ARCHITECTS/PLANNERS
6969 SW Hampton Street
Portland, OR 97223
phone: 503-968-6800
fax: 503-968-6860
www.pkaarchitects.com

STRUCTURAL REGISTERED PROFESSIONAL ENGINEER OREGON M. BRADLEY MOYES
EXPIRES 12-31-16

DEPARTMENT OF VETERANS AFFAIRS
SOUTHERN OREGON REHABILITATION CENTER & CLINICS
8495 Crater Lake Highway, White City, Oregon 97503-3012

kpff
111 SW Fifth Ave., Suite 2500
Portland, OR 97204
O: 503.227.3251
F: 503.227.7980
www.kpff.com

Drawing Title: SPECIAL INSPECTION NOTES

SPECIALTY CARE BUILDING - 201B

Date: 11/27/15
Project No.: 131207

Approved: Proj Eng | Approved: Infect Cont | Approved: Chief P&O | Approved: Chief M&R | Approved: Safety Mgr.

Building No.: Building 201B | Chkd By/Proj. Mgr: NR | Drawn By: CB | Drawing No.: S0.04

Approved: Service Chief | Approved: Chief Facilities Mgmt | Approved: VAMC Director | Location | Dwg. of

US DEPARTMENT OF VETERANS AFFAIRS

SPECIAL INSPECTION NOTES

TESTING

TABLE 6 - REQUIRED TESTING FOR SPECIAL INSPECTIONS

SYSTEM OR MATERIAL	INSPECTION				REMARKS
	OSSC CODE REFERENCE	CODE OR STANDARD REFERENCE	FREQUENCY (NOTE 6)		
			CONTINUOUS	PERIODIC	
GEOTECHNICAL					
FILL IN-PLACE DENSITY OR PREPARED SUBGRADE DENSITY	1705.6	VARIES; GEOTECHNICAL REPORT OR MINIMUM PER IBC APPENDIX J107.5, WHICHEVER IS GREATER		X	BY THE GEOTECHNICAL ENGINEER
MATERIAL VERIFICATION		VARIES; CLASSIFICATION AND TESTING OF CONTROLLED FILL MATERIALS		X	BY THE GEOTECHNICAL ENGINEER
CONCRETE					
CONCRETE STRENGTH	1705.3 ASTM C172 ASTM C 31 ACI318:5.6,5.8	ASTM C39	EACH 150 CY NOR LESS THAN EACH 5000 SF OF SLAB OR WALL PLACED EACH SHIFT		FABRICATE SPECIMENS AT TIME FRESH CONCRETE IS PLACED
CONCRETE SLUMP		ASTM C143			
CONCRETE AIR CONTENT		ASTM C231			
CONCRETE TEMPERATURE		ASTM C1064			
STEEL					
ULTRASONIC (UT) TESTING OF WELDS	1705.2.2	AWS D1.1 6.13 & 6.14.3			ALL C.J.P. WELDS 5/16" AND THICKER REQUIRE UT TESTING.
MAGNETIC PARTICLE (MT) TESTING OF WELDS	1705.2.2	AWS D1.1 6.14.4 AISC360 N5.5c			REQUIRED AT THERMALLY CUT ACCESS HOLES WHERE FLANGE THICKNESS EXCEEDS 2" FOR ROLLED SHAPES OR WHEN THE WEB THICKNESS EXCEEDS 2" FOR BUILT-UP SHAPES. REQUIRED WHERE SPECIFICALLY NOTED ON DRAWINGS OR AS DIRECTED BY KPFF AT WELDS IDENTIFIED TO BE IN QUESTION BASED ON INSPECTIONS
PRE-CONSTRUCTION TESTING OF WELDING STUDS	1705.2.2	AWS D1.1 7.7.1	EACH SIZE AND TYPE OF STUD EACH SHIFT		THIS TESTING PERFORMED BY CONTRACTOR AND CONFIRMED BY SPECIAL INSPECTOR
STUD APPLICATION QUALIFICATION	1705.2.2	AWS D1.1 7.6	NON-PREQUALIFIED APPLICATIONS		THIS TESTING PERFORMED BY CONTRACTOR AND CONFIRMED BY SPECIAL INSPECTOR
PRE-INSTALLATION VERIFICATION OF PRETENSIONED HIGH STRENGTH BOLTS	1705.2.2	RCSC SPECIFICATION FOR STRUCTURAL JOINTS USING ASTM A325 OR A490 BOLTS SECTION 7	EACH COMBINATION OF DIAMETER, LENGTH, GRADE, AND LOT TO BE USED IN THE WORK		

TABLE 7 - REQUIRED TESTING FOR SEISMIC RESISTANCE SPECIAL INSPECTIONS

SYSTEM OR MATERIAL	INSPECTION			REMARKS
	OSSC CODE REFERENCE	CODE OR STANDARD REFERENCE	FREQUENCY	
CONCRETE REINFORCEMENT				
TEST A615 REINFORCEMENT FOR WELDABILITY WHEN SUCH REINFORCEMENT IS TO BE WELDED	1705.12.1	ACI 318: 3.5.2		

TABLE 7A - REQUIRED TESTING FOR SEISMIC RESISTANCE SPECIAL INSPECTIONS OF STRUCTURAL STEEL

SYSTEM OR MATERIAL	INSPECTION			REMARKS
	OSSC CODE REFERENCE	CODE OR STANDARD REFERENCE	DESCRIPTION/FREQUENCY	
2a) k-AREA NDT AT WELDING OF DOUBLER PLATES, COINTINUTITY PLATES OR STIFFENERS	1705.12.2	AISC 341 SECTION J6	WEB SHALL BE TESTED FOR CRACKS USING MT INCLUDING BASE METTAL WITHIN 3 IN OF WELD.	MT SHALL BE PERFORMED NO SOONER THAN 48 HOURS AFTER COMPLETION OF WELDING
2b) CJP GROOVE WELD NDT			UT SHALL BE PERFORMED ON 5/16" THICKNESS AND GREATER. MT SHALL BE PEROFMED ON 25% OF ALL BEAM-TO-COLUMN CJP GROOVE WELDS.	WELD DISCONTINUITIES SHALL BE ACCEPTED OR REJECTED ON THE BASIS OF CRITERIA OF AWS D1.1/D1.1M TABLE 6.2. UT TESTING NOT REQUIRED ON THICKNESS LESS THAN 5/16"
2c) BASE METAL NDT FOR LAMELLAR TEARING AND LAMINATIONS			FOR BASE METAL THICKNESS (t) OF 1 1/2" AND GREATER AND CONNECTED MATERIAL THICKNESS OF 3/4" AND GREATER, UT FOR DISCONTINUITIES BEHIND AND ADJACENT TO THE FUSION LINE.	ANY BASE METAL DISCONTINUITIES FOUND WITHIN 1/4 OF THE STEEL SURFACE SHALL BE ACCEPTED OR REJECTED ON THE BASIS OF THE CRITERIA OF AWS D1.1/D1.1M TABLE 6.2
2d) BEAM COPE AND ACCESS HOLE NDT			MT OR PENETRANT TESTING OF WELD SPLICES AND CONNECTIONS, THERMALLY CUT SURFACES OF BEAM COPES AND ACCESS HOLES WHERE FLANGE THICKNESS EXCEEDS 1 1/2" FOR ROLLED SHAPES OR WHEN THE WEB THICKNESS EXCEEDS 1 1/2" FOR BUILT-UP SHAPES	
2f) WELD TAB REMOVAL SITES			AT THE END OF WELDS WHERE WELD TABS HAVE BEEN REMOVED, MT SHALL BE PERFORMED ON THE SAME BEAM-TO-COLUMN JOINTS RECEIVING UT AS REQUIRED UNDER ITEM 2b	MT OF CONTINUTITY PLATE WELD TABS REMOVAL SITES IS NOT REQUIRED.

STATEMENT OF SPECIAL INSPECTION NOTES:

1. SPECIAL INSPECTIONS SHALL CONFORM TO SECTION 1705 OF THE 2014 OSSC, CONTRACT DOCUMENTS AND APPROVED SUBMITTALS. REFER TO TABLES 1 THROUGH 5 FOR SPECIAL INSPECTION AND TABLES 6, 7 AND 7A FOR TESTING REQUIREMENTS.

2. SPECIAL INSPECTIONS AND ASSOCIATED TESTING SHALL BE PERFORMED BY AN APPROVED ACCREDITED INDEPENDENT AGENCY MEETING THE REQUIREMENTS OF ASTM E329 (MATERIALS). THE INSPECTION AND TESTING AGENCY SHALL FURNISH TO THE [ARCHITECT] A COPY OF THEIR SCOPE OF ACCREDITATION. SPECIAL INSPECTORS SHALL BE APPROVED BY THE BUILDING OFFICIAL. WELDING INSPECTORS SHALL BE QUALIFIED PER SECTION 6.1.4.1.1 OF AWS D1.1.

3. THE SPECIAL INSPECTOR SHALL OBSERVE THE INDICATED WORK FOR COMPLIANCE WITH THE APPROVED CONSTRUCTION DOCUMENTS. ALL DISCREPANCIES SHALL BE BROUGHT TO THE ATTENTION OF THE CONTRACTOR FOR CORRECTION AND NOTED IN THE INSPECTION REPORTS.

4. THE SPECIAL INSPECTOR AND GEOTECHNICAL ENGINEER SHALL FURNISH INSPECTION REPORTS FOR EACH INSPECTION TO THE BUILDING OFFICIAL, ARCHITECT, CONTRACTOR, AND OWNER. THE SPECIAL INSPECTION AGENCY SHALL SUBMIT A FINAL REPORT STATING THAT THE WORK REQUIRING SPECIAL INSPECTION WAS INSPECTED AND IS IN CONFORMANCE WITH THE APPROVED CONSTRUCTION DOCUMENTS AND THAT ALL DISCREPANCIES NOTED IN THE INSPECTION REPORTS HAVE BEEN CORRECTED.

5 FOR STEEL INSPECTIONS PER AISC 360 AND 341 (TABLES 2A AND 4A):
QUALITY ASSURANCE (QA) IS REQUIRED FOR EACH ITEM IN TABLES UNLESS SPECIFICALLY NOTED OTHERWISE.
QUALITY CONTORL (QC) TO BE PROVIDED BY THE FABRICATOR, ERECTOR OR OTHER RESPONSIBLE CONTRACTOR AS APPLICABLE. CONTRACTOR AND SPECIAL INSPECTOR TO DOCUMENT QUALITY CONTROL AS REQUIRED IN AISC 360 SECTION N3 AND AISC 341 SECTION J2.

6 INSPECTION TYPES
CONTINUOUS : THE FULL-TIME OBSERVATION OF WORK REQUIRING SPECIAL INSPECTION BY AN APPROVED SPECIAL INSPECTOR WHO IS PRESENT IN THE AREA WHERE THE WORK IS BEING PERFORMED.
PERIODIC : THE PART-TIME OR INTERMITTENT OBSERVATION OF WORK REQUIRING SPECIAL INSPECTION BY AN APPROVED SPECIAL INSPECTOR WHO IS PRESENT IN THE AREA WHERE THE WORK HAS BEEN OR IS BEING PERFORMED AND AT THE COMPLETION OF THE WORK.

OBSERVE : OBSERVE THESE FUNCTIONS ON A RANDOM, DAILY BASIS. OPERATIONS NEED NOT BE DELAYED PENDING OBSERVATIONS.
PERFORM : INSPECTIONS SHALL BE PERFORMED PRIOR TO THE FINAL ACCEPTANCE OF THE ITEM.

7 PERFORM INSPECTION PRIOR TO FINAL ACCEPTANCE OF THE ITEM FOR TEN WELDS TO BE MADE BY A GIVEN WELDER, WITH THE WELDER DEMONSTRATING UNDERSTANDING OF REQUIREMENTS AND POSSESSION OF SKILLS AND TOOLS TO VERIFY THESE ITEMS, THE PERFORM DESIGNATION OF THIS TASK SHALL BE REDUCED TO OBSERVE, AND THE WELDER SHALL PERFORM THIS TASK. SHOULD THE INSPECTOR DETERMINE THAT THE WELDER HAS DISCONTINUED PERFORMANCE OF THIS TASK, THE TASK SHALL BE RETURNED TO PERFORM UNTIL SUCH TIME AS THE INSPECTOR HAS RE-ESTABLISHED ADEQUATE ASSURANCE THAT THE WELDER WILL PERFORM THE INSPECTION TASKS LISTED

8 SPECIAL INSPECTION OF MECHANICAL POST INSTALLED ANCHORS SHALL BE IN STRICT CONFORMANCE WITH THE ICC REPORT AND MANUFACTURERS INSTALLATION REQUIREMENTS. ANCHOR INSTALLERS SHALL BE QUALIFIED AS REQUIRED BY JURISDICTION REQUIREMENTS.

- INSPECTION REPORTS SHALL IDENTIFY NAMES OF INSTALLERS.
- SPECIAL INSPECTOR SHALL PROVIDE DOCUMENTATION AT THE END OF ANCHOR INSTALLATIONS STATING THAT THE ANCHORS WERE INSPECTED PER APPROVED ANCHOR EVAULATION REPORT.

9 TABLE 7 ABBREVIATIONS:
NDT - NON-DESTRUCTIVE TESTING
CJP - COMPLETE JOINT PENETRATION
MT - MAGNETIC PARTICLE TESTING
RBS - REDUCED BEAM SECTION

10 DOCUMENT (D): INDICATES CONTRACTOR AND SPECIAL INSPECTOR TO PROVIDE DOCUMENTATION IN ACCORDANCE WITH AISC 341.

CONTRACTOR RESPONSIBILITY:

THE CONTRACTOR RESPONSIBLE FOR THE CONSTRUCTION OF THE MAIN WIND-OR SEISMIC-FORCE-RESISTING SYSTEM, OR A WIND-OR SEISMIC-RESISTING COMPONENT LISTED IN TABLES 4, 4A, 5, 7, 7A, N2, AND N4 SHALL SUBMIT A WRITTEN STATEMENT OF RESPONSIBILITY TO THE BUILDING OFFICIAL AND THE OWNER PRIOR TO THE COMMENCEMENT OF WORK ON THE SYSTEM OR COMPONENT. THE CONTRACTOR'S STATEMENT OF RESPONSIBILITY SHALL CONTAIN THE FOLLOWING:

ACKNOWLEDGEMENT OF AWARENESS OF THE SPECIAL REQUIREMENTS CONTAINED IN THE STATEMENT OF SPECIAL INSPECTIONS.

1. ACKNOWLEDGEMENT THAT CONTROL WILL BE EXERCISED TO OBTAIN CONFORMANCE WITH THE CONSTRUCTION DOCUMENTS APPROVED BY THE BUILDING OFFICIAL.

2. PROCEDURES FOR EXERCISING CONTROL WITHIN THE CONTRACTOR'S ORGANIZATION, THE METHOD AND FREQUENCY OF REPORTING AND DISTRIBUTION OF THE REPORTS.

3. IDENTIFICATION AND QUALIFICATIONS OF THE PERSON(S) EXERCISING SUCH CONTROL AND THEIR POSITION(S) IN THE ORGANIZATION.

Revisions | Date

pka ARCHITECTS
PETERSEN KOLBERG & ASSOCIATES ARCHITECTS/PLANNERS
6969 SW Hampton Street
Portland, OR 97223
phone: 503-968-6800
fax: 503-968-6860
www.pkaarchitects.com

REGISTERED PROFESSIONAL ENGINEER OREGON W. BRADLY MOYER
EXPIRES 12-31-16

DEPARTMENT OF VETERANS AFFAIRS
SOUTHERN OREGON REHABILITATION CENTER & CLINICS
8495 Crater Lake Highway, White City, Oregon 97503-3012

kpff
111 SW Fifth Ave., Suite 2500
Portland, OR 97204
O: 503.227.3251
F: 503.227.7980
www.kpff.com

Drawing Title: SPECIAL INSPECTION NOTES

SPECIALTY CARE BUILDING - 201B

Date: 11/27/15
Project No.: 131207
Drawing No.: S0.05
Dwg. of

Approved: Proj Eng | Approved: Infect Cont | Approved: Chief P&O | Approved: Chief M&R | Approved: Safety Mgr.
Approved: Service Chief | Approved: Chief Facilities Mgmt | Approved: VAMC Director

Building No.: Building 201B | Chkd By/Proj. Mgr: NR | Drawn By: CB
Location

US DEPARTMENT OF VETERANS AFFAIRS

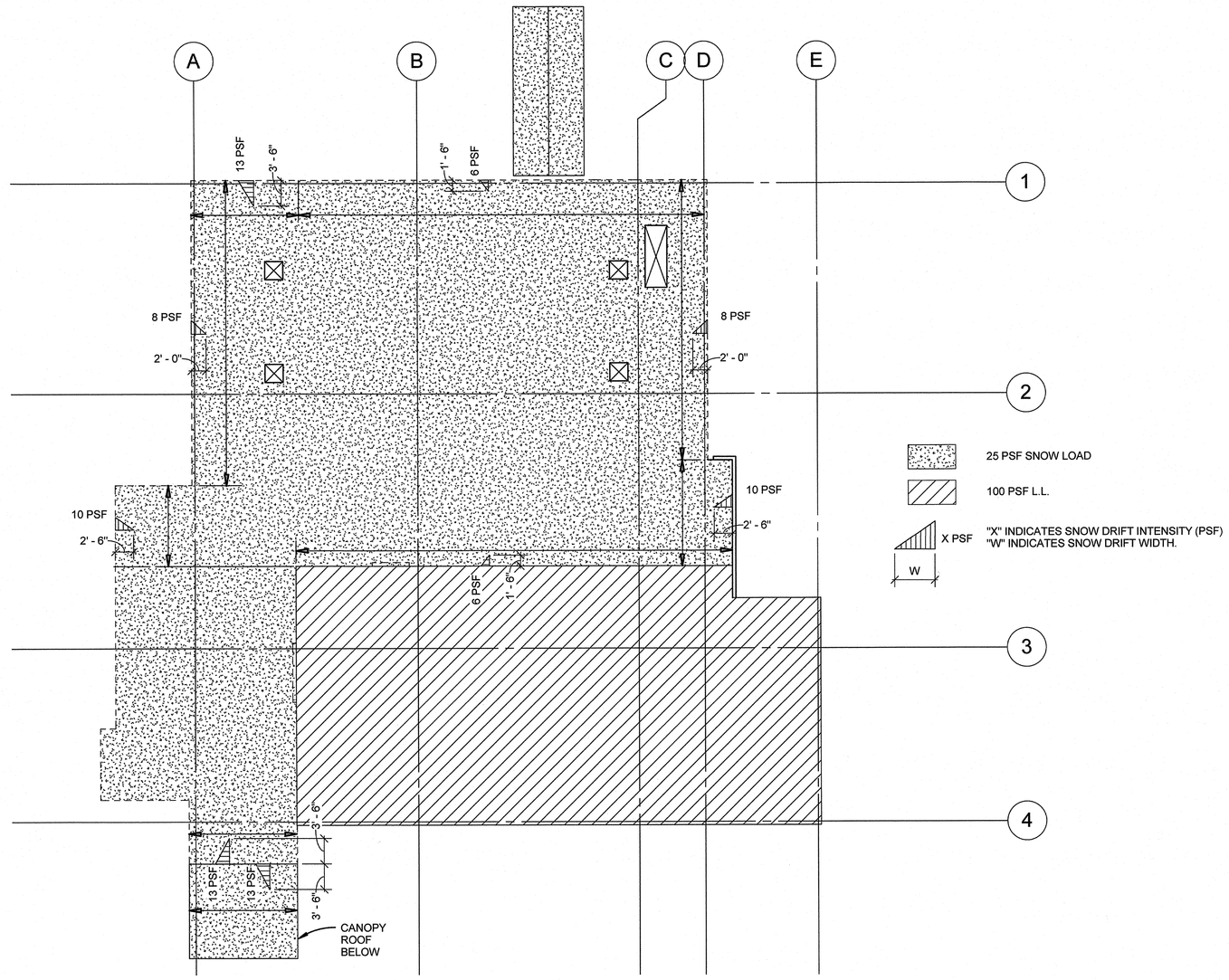

3 LIVE LOAD MAP AT ROOF
3/32" = 1'-0" S3.01

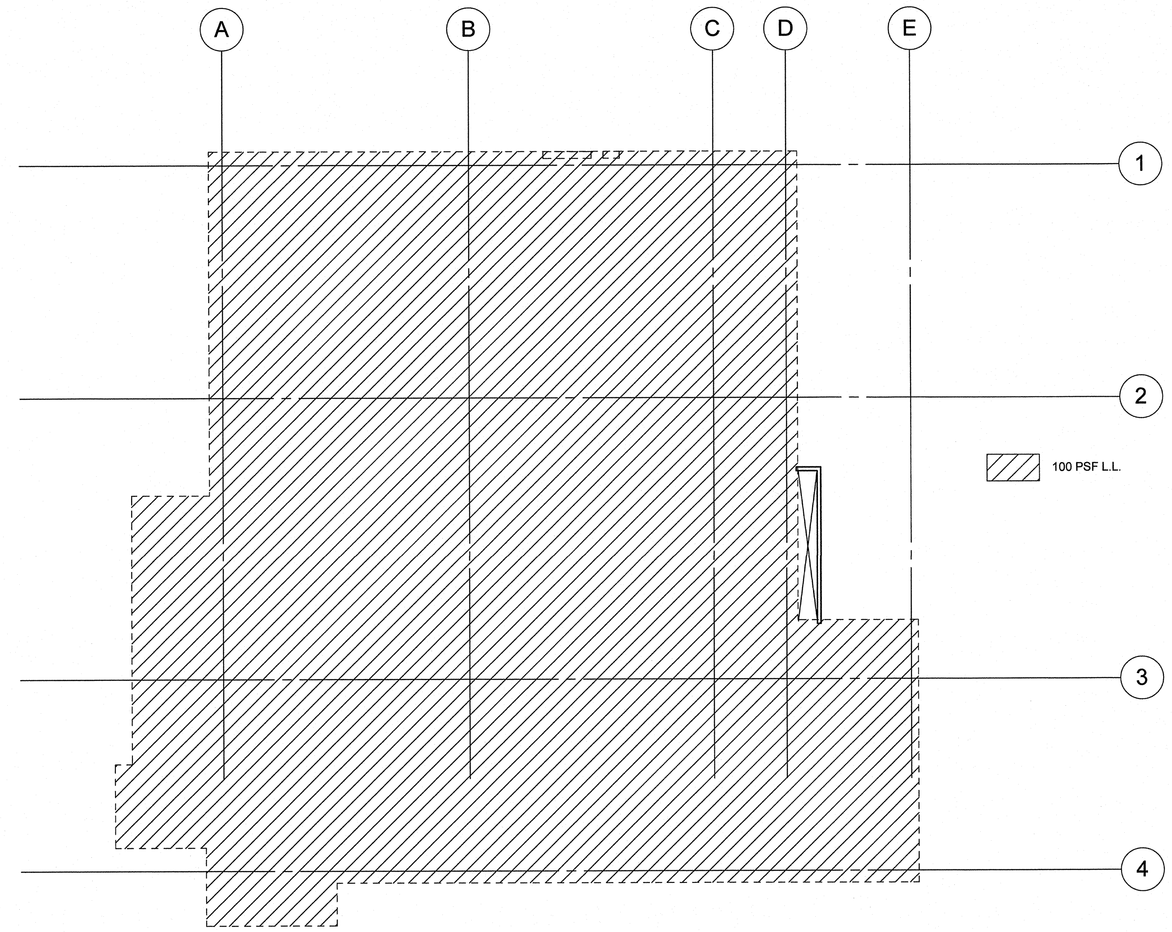

1 LIVE LOAD MAP AT FIRST FLOOR
3/32" = 1'-0" S3.01

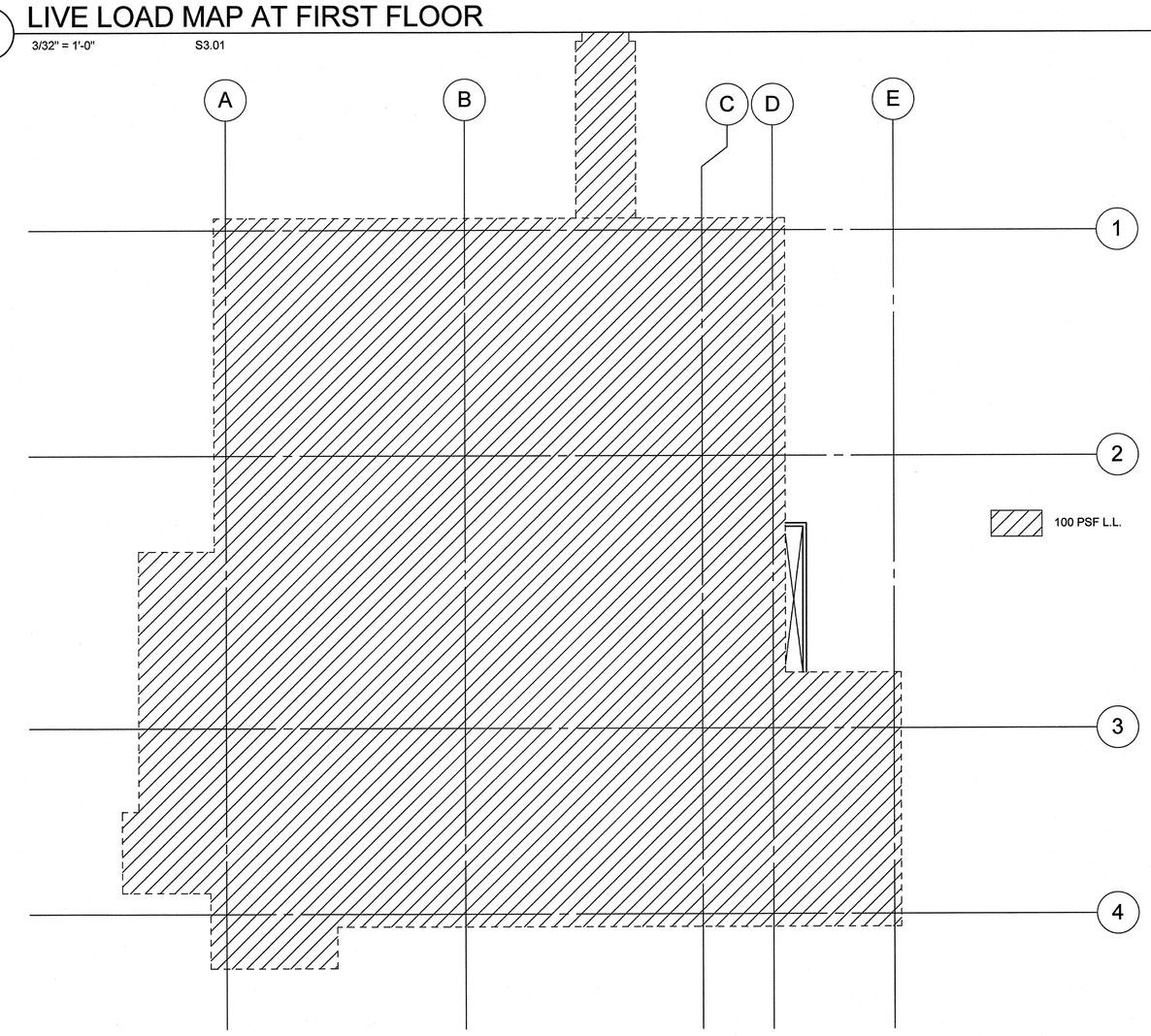

2 LIVE LOAD MAP AT SECOND FLOOR
3/32" = 1'-0" S3.01

Revisions	Date
1	

pka ARCHITECTS

PETERSEN KOLBERG & ASSOCIATES ARCHITECTS/PLANNERS
6969 SW Hampton Street
Portland, OR 97223
phone: 503-968-6800
fax: 503-968-6860
www.pkaarchitects.com

REGISTERED PROFESSIONAL ENGINEER
OREGON
M. BRADLY MYERS
EXPIRES 12-31-16

DEPARTMENT OF VETERANS AFFAIRS
SOUTHERN OREGON REHABILITATION CENTER & CLINICS
8495 Crater Lake Highway, White City, Oregon 97503-3012

kpff
111 SW Fifth Ave., Suite 2500
Portland, OR 97204
O: 503.227.3251
F: 503.227.7980
www.kpff.com

Drawing Title: LIVE LOAD MAPS

SPECIALTY CARE BUILDING - 201B

Date: 11/27/15
Project No.: 131207

Approved: Proj Eng | Approved: Infect Cont | Approved: Chief P&O | Approved: Chief M&R | Approved: Safety Mgr.
Approved: Service Chief | Approved: Chief Facilities Mgmt | Approved: VAMC Director

Building No.: Building 201B | Chkd By/Proj. Mgr: NR | Drawn By: CB
Location

Drawing No.: S0.06
Dwg. of

US DEPARTMENT OF VETERANS AFFAIRS

NOTES:

1. (X) INDICATES FOOTING TYPE. REF. 1/S5.01 FOR SCHEDULE.
2. (X)* INDICATES FOOTING TYPE w/ TOP MAT REF. 1/S5.01 FOR SCHEDULE.
3. (XXX.XX') INDICATES BOTTOM OF FOOTING ELEVATION.
4. EL. XXX'-XX" INDICATES TOP OF SLAB ELEVATION.
5. INDICATES STEP IN ELEVATION.
6. S —— S INDICATES STEPPED FOOTING. REF. 5/S5.01.
7. INDICATES EXISTING STRUCTURE.
8. FIELD VERIFY EXISTING DIMENSIONS AND ELEVATIONS.
9. REF. SHEET S5.01 FOR TYPICAL CONCRETE DETAILS.
10. REF. SHEET S5.02 FOR TYPICAL SLAB ON GRADE DETAILS.
11. PX INDICATES PILASTER TYPE, REF. 6/S5.01.
12. INDICATES CONC. HOUSEKEEPING PAD. REF. ARCH. AND MECH. FOR LOCATION. REF. 5/S5.02

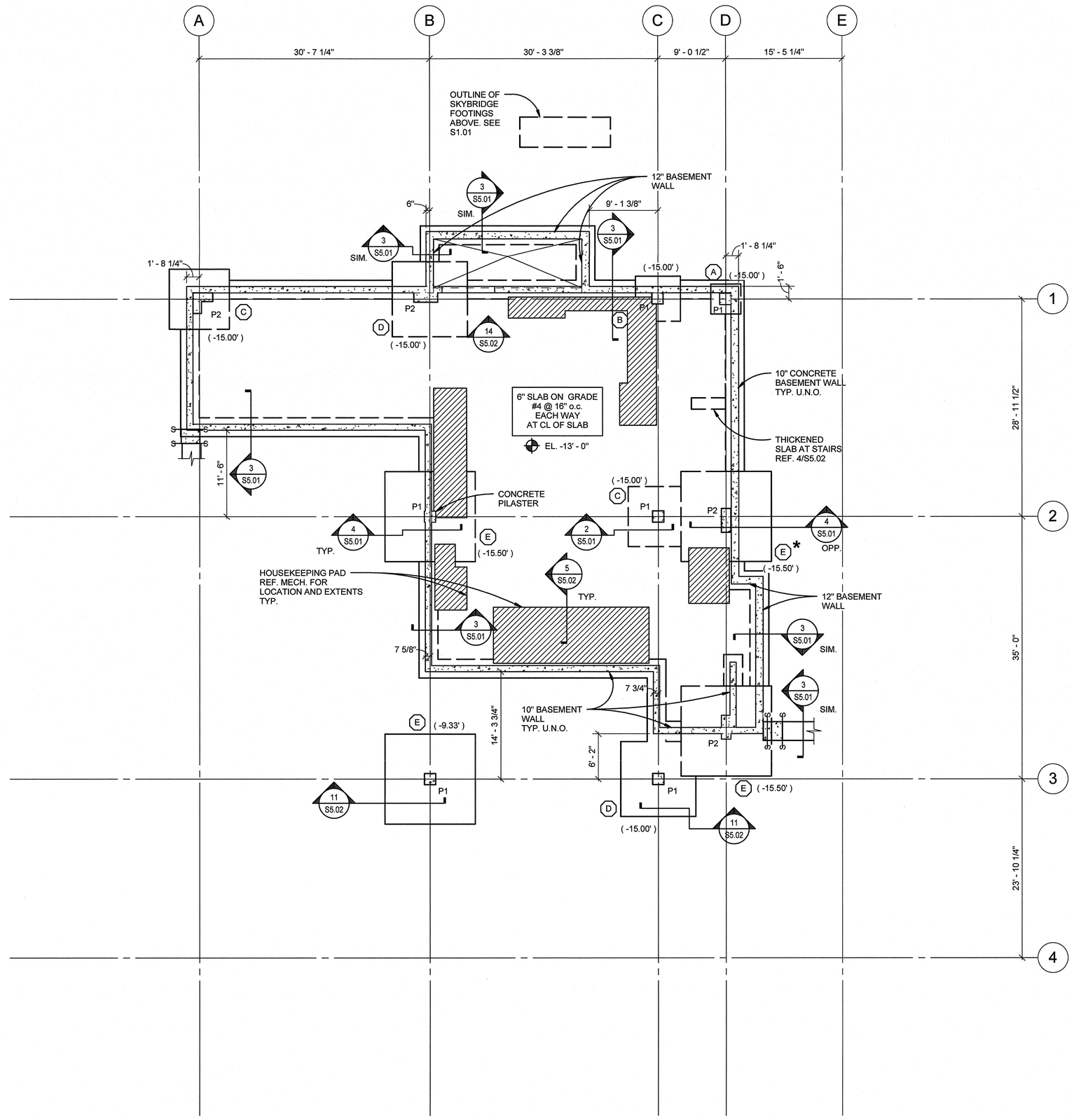

1 BASEMENT/FOUNDATION PLAN
1/8" = 1'-0"

N

Revisions	Date

pka ARCHITECTS

PETERSEN KOLBERG & ASSOCIATES ARCHITECTS/PLANNERS
6969 SW Hampton Street
Portland, OR 97223
phone: 503-968-6800
fax: 503-968-6860
www.pkaarchitects.com

REGISTERED PROFESSIONAL ENGINEER
M. BRADLY MOYES
OREGON
EXPIRES 12-31-16

DEPARTMENT OF VETERANS AFFAIRS
SOUTHERN OREGON REHABILITATION CENTER & CLINICS
8495 Crater Lake Highway, White City, Oregon 97503-3012

kpff
111 SW Fifth Ave., Suite 2500
Portland, OR 97204
O: 503.227.3251
F: 503.227.7980
www.kpff.com

Drawing Title: BASEMENT/ FOUNDATION PLAN

SPECIALTY CARE BUILDING - 201B

Approved: Proj Eng | Approved: Infect Cont | Approved: Chief P&O | Approved: Chief M&R | Approved: Safety Mgr.
Approved: Service Chief | Approved: Chief Facilities Mgmt | Approved: VAMC Director

Building No.: Building 201B | Chkd By/Proj. Mgr: NR | Drawn By: CB | Location

Date: 11/27/15
Project No.: 131207
Drawing No.: S1.00
Dwg. of

US DEPARTMENT OF VETERANS AFFAIRS

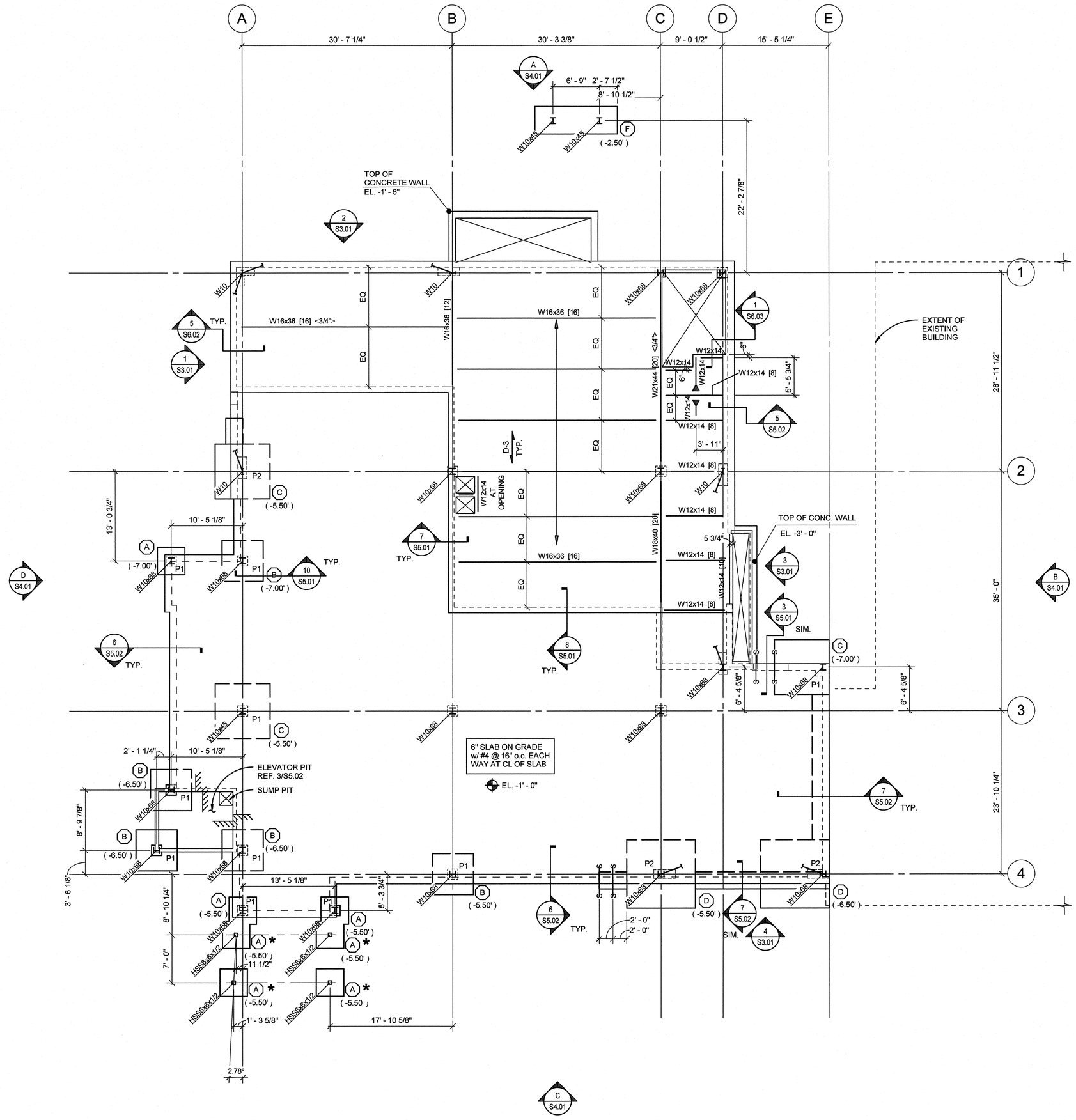

1 FIRST FLOOR FRAMING PLAN
1/8" = 1'-0"

NOTES:

1. REF. SHEETS S6.01-S6.04 FOR TYPICAL STEEL DETAILS.
2. [X] INDICATES CONNECTION TYPE. REF. SHEET S6.02 FOR SCHEDULES AND CONNECTION DETAILS. REF. NOTE 3 WHERE CONNECTION TYPES ARE NOT SHOWN.
3. PROVIDE THE FOLLOWING CONNECTION TYPES UNLESS NOTED OTHERWISE ON THE PLANS:

BEAM DESIGNATION	CONNECTION TYPE
W8, W10	2 2C
W12, W14	3
W16	4 4C
W18	5
W21	6

4. [XX] INDICATES NUMBER OF 3/4"Øx4 1/2" HEADED STUDS EVENLY DISTRIBUTED ALONG BEAM LENGTH. REF. SHEET S6.03 FOR TYPICAL COMPOSITE BEAM STUD SPACING DETAIL. PROVIDE HEADED STUDS AT 18" o.c. U.N.O.
5. [X-X-X] INDICATES NUMBER OF 3/4"Øx4 1/2" HEADED STUDS EVENLY DISTRIBUTED BETWEEN WF BEAMS ON WF GIRDERS. REF. SHEET S6.03 FOR TYPICAL COMPOSITE BEAM STUD SPACING DETAIL.
6. <X"> INDICATES UPWARD CAMBER AT MID SPAN.
7. D - X INDICATES SPAN DIRECTION OF DECK. REF. SCHEDULE 6/S6.04 FOR DECK INFORMATION.
8. EL. XXX'-XX" INDICATES TOP OF SLAB ELEVATION.
9. EL. XXX'-XX" INDICATES BOTTOM OF DECK ELEVATION.
10. INDICATES MOMENT CONNECTION. REF. 7/S6.02 FOR DETAILS.
11. REF. SHEETS S6.03 - S6.04 FOR TYPICAL DECK REINFORCING AT OPENINGS.
12. (A) INDICATES ABOVE.
13. (B) INDICATES BELOW
14. (E) INDICATES EXISTING.
15. INDICATES BUCKLING RESTRAINED BRACED FRAME. REF. S3.01
16. (X) INDICATES FOOTING TYPE. REF. 1/S5.01 FOR SCHEDULE.
17. (X)* INDICATES FOOTING TYPE w/ TOP MAT REF. 1/S5.01 FOR SCHEDULE.
18. (XXX.XX') INDICATES BOTTOM OF FOOTING ELEVATION.
19. EL. XXX'-XX" INDICATES TOP OF SLAB ELEVATION.
20. INDICATES STEP IN ELEVATION.
21. S —— S INDICATES STEPPED FOOTING. REF. 5/S5.01.
22. INDICATES EXISTING STRUCTURE.
23. FIELD VERIFY EXISTING DIMENSIONS AND ELEVATIONS.
24. REF. SHEET S5.01 FOR TYPICAL CONCRETE DETAILS.
25. REF. SHEET S5.02 FOR TYPICAL SLAB ON GRADE DETAILS.
26. PX INDICATES PILASTER TYPE, REF. 6/S5.01.

Revisions | Date

pka ARCHITECTS

PETERSEN KOLBERG & ASSOCIATES ARCHITECTS/PLANNERS
6969 SW Hampton Street
Portland, OR 97223
phone: 503-968-6800
fax: 503-968-6860
www.pkaarchitects.com

STRUCTURAL REGISTERED PROFESSIONAL ENGINEER 98545PE OREGON JULY 13, 1978 M. BRADLY MOYES EXPIRES 12-31-16

DEPARTMENT OF VETERANS AFFAIRS
SOUTHERN OREGON REHABILITATION CENTER & CLINICS
8495 Crater Lake Highway, White City, Oregon 97503-3012

kpff
111 SW Fifth Ave., Suite 2500
Portland, OR 97204
O: 503.227.3251
F: 503.227.7980
www.kpff.com

Drawing Title: FIRST FLOOR FRAMING PLAN

SPECIALTY CARE BUILDING - 201B

Approved: Proj Eng | Approved: Infect Cont | Approved: Chief P&O | Approved: Chief M&R | Approved: Safety Mgr.

Approved: Service Chief | Approved: Chief Facilities Mgmt | Approved: VAMC Director

Building No.: Building 201B | Chkd By/Proj. Mgr: NR | Drawn By: CB

Location

Date: 11/27/15

Project No.: 131207

Drawing No.: S1.01

Dwg. of

U.S. DEPARTMENT OF VETERANS AFFAIRS

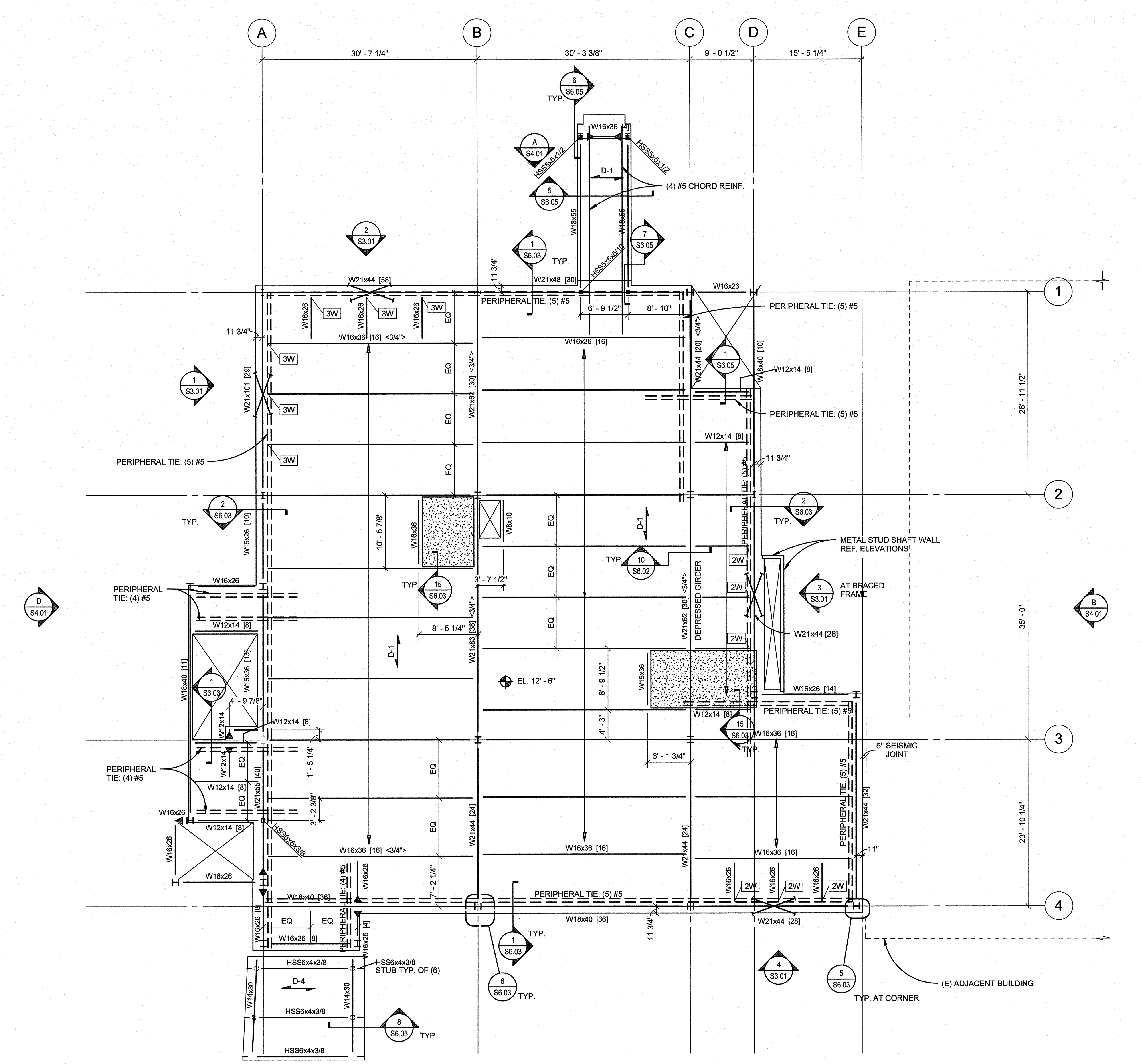

1 SECOND FLOOR FRAMING PLAN

1/8" = 1'-0"

NOTES:

1. REF. SHEETS S6.01-S6.04 FOR TYPICAL STEEL DETAILS.
2. [X] INDICATES CONNECTION TYPE. REF. SHEET S6.02 FOR SCHEDULES AND CONNECTION DETAILS. REF. NOTE 3 WHERE CONNECTION TYPES ARE NOT SHOWN.
3. PROVIDE THE FOLLOWING CONNECTION TYPES UNLESS NOTED OTHERWISE ON THE PLANS:

BEAM DESIGNATION	CONNECTION TYPE
W8	2D
W10, W12	2
W14, W16	3
W18, W21	4
W24, W27, W30	5
W33, W36	6

4. [XX] INDICATES NUMBER OF 3/4"Øx4 1/2" HEADED STUDS EVENLY DISTRIBUTED ALONG BEAM LENGTH. REF. SHEET S6.03 FOR TYPICAL COMPOSITE BEAM STUD SPACING DETAIL. PROVIDE HEADED STUDS AT 18" o.c. U.N.O.
5. [X-X-X] INDICATES NUMBER OF 3/4"Øx4 1/2" HEADED STUDS EVENLY DISTRIBUTED BETWEEN WF BEAMS ON WF GIRDERS. REF. SHEET S6.03 FOR TYPICAL COMPOSITE BEAM STUD SPACING DETAIL.
6. <X"> INDICATES UPWARD CAMBER AT MID SPAN.
7. D - X INDICATES SPAN DIRECTION OF DECK. REF. SCHEDULE 6/S6.04 FOR DECK INFORMATION.
8. EL. XXX'-XX" INDICATES TOP OF SLAB ELEVATION.
9. EL. XXX'-XX" INDICATES BOTTOM OF DECK ELEVATION.
10. INDICATES MOMENT CONNECTION. REF. 7/S6.02 FOR DETAILS.
11. REF. SHEETS S6.03 - S6.04 FOR TYPICAL DECK REINFORCING AT OPENINGS.
12. (E) INDICATES EXISTING.
13. INDICATES BUCKLING RESTRAINED BRACED FRAME. REF. S3.01
14. INDICATES PERIPHERAL TIE REINFORCING. REF. 7/S6.04.
15. PERIPHERAL TIE REINFORCEMENT SHALL BE CONTINUOUS AND PLACED ADJACENT TO COLUMN LINE, DO NOT PLACE DIRECTLY ABOVE STEEL BEAM. PLACE WITHIN A 3FT ZONE FROM EDGE OF SLAB. REF 7/S6.04 AND 8/S6.04.
16. INTERNAL TIE REINFORCEMENT SHALL BE CONTINUOUS AND EVENLY DISTRIBUTED BETWEEN COLUMN LINES, DO NOT PLACE DIRECTLY ABOVE STEEL BEAM.
17. PERIPHERAL AND INTERNAL TIE REINFORCEMENT SHALL HAVE STAGGERED LAP SPLICES AND BE PLACED WITHIN THE MIDDLE 60% AREA OF BAY.
18. INTERNAL TIE REINFORCEMENT SHALL BE ANCHORED TO PERIPHERAL TIE REINFORCEMENT WITH SEISMIC HOOKS.
19. PERIPHERAL TIE REINFORCEMENT SHALL BE DEVELOPED INTO THE SLAB FOR ITS FULL TENSION CAPACITY AT RE-ENTRANT CORNERS. EXTEND PERIPHERAL TIES (1) LAP SPLICE BEYOND RE-ENTRANT CORNER FRAMING
20. INDICATES AREA OF DEPRESSED SLAB. 3" DEPRESSION TYP. REF. 10/S6.02 AND 15/S6.03.

Revisions	Date

pka ARCHITECTS

PETERSEN KOLBERG & ASSOCIATES
ARCHITECTS/PLANNERS
6969 SW Hampton Street
Portland, OR 97223
phone: 503-968-6800
fax: 503-968-6860
www.pkaarchitects.com

REGISTERED PROFESSIONAL STRUCTURAL ENGINEER
10542
OREGON
JULY 13, 19
M. BRADLY MOYES
EXPIRES 12-31-16

DEPARTMENT OF VETERANS AFFAIRS
SOUTHERN OREGON REHABILITATION CENTER & CLINICS
8495 Crater Lake Highway, White City, Oregon 97503-3012

kpff
111 SW Fifth Ave., Suite 2500
Portland, OR 97204
O: 503.227.3251
F: 503.227.7980
www.kpff.com

Drawing Title				
SECOND FLOOR FRAMING PLAN				
Approved: Proj Eng	Approved: Infect Cont	Approved: Chief P&O	Approved: Chief M&R	Approved: Safety Mgr.
Approved: Service Chief	Approved: Chief Facilities Mgmt	Approved: VAMC Director		

SPECIALTY CARE BUILDING - 201B		
Building No. Building 201B	Chkd By/Proj. Mgr NR	Drawn By CB
Location		

Date	11/27/15
Project No.	131207
Drawing No.	S1.02
Dwg.	of

US DEPARTMENT OF VETERANS AFFAIRS

NOTES:

1. REF. SHEETS S6.01-S6.04 FOR TYPICAL STEEL DETAILS.
2. [X] INDICATES CONNECTION TYPE. REF. SHEET S6.02 FOR SCHEDULES AND CONNECTION DETAILS. REF. NOTE 3 WHERE CONNECTION TYPES ARE NOT SHOWN.
3. PROVIDE THE FOLLOWING CONNECTION TYPES UNLESS NOTED OTHERWISE ON THE PLANS:

BEAM DESIGNATION	CONNECTION TYPE
W8	2D
W10, W12	2
W14, W16	3
W18, W21	4
W24, W27, W30	5
W33, W36	6

4. [XX] INDICATES NUMBER OF 3/4"Øx4 1/2" HEADED STUDS EVENLY DISTRIBUTED ALONG BEAM LENGTH. REF. SHEET S6.03 FOR TYPICAL COMPOSITE BEAM STUD SPACING DETAIL. PROVIDE HEADED STUDS AT 18" o.c. U.N.O.
5. [X-X-X] INDICATES NUMBER OF 3/4"Øx4 1/2" HEADED STUDS EVENLY DISTRIBUTED BETWEEN WF BEAMS ON WF GIRDERS. REF. SHEET S6.03 FOR TYPICAL COMPOSITE BEAM STUD SPACING DETAIL.
6. <X"> INDICATES UPWARD CAMBER AT MID SPAN.
7. D - X INDICATES SPAN DIRECTION OF DECK. REF. SCHEDULE 6/S6.04 FOR DECK INFORMATION.
8. EL. XXX'-XX" INDICATES TOP OF SLAB ELEVATION.
9. EL. XXX'-XX" INDICATES BOTTOM OF DECK ELEVATION.
10. INDICATES MOMENT CONNECTION. REF. 7/S6.02 FOR DETAILS.
11. REF. SHEETS S6.03 - S6.04 FOR TYPICAL DECK REINFORCING AT OPENINGS.
12. (A) INDICATES ABOVE.
13. (B) INDICATES BELOW
14. (E) INDICATES EXISTING.
15. INDICATES BUCKLING RESTRAINED BRACED FRAME. REF. S3.01
16. INDICATES PERIPHERAL TIE REINFORCING. REF. 6/S6.04.
17. PERIPHERAL TIE REINFORCEMENT SHALL BE CONTINUOUS AND PLACED ADJACENT TO COLUMN LINE, DO NOT PLACE DIRECTLY ABOVE STEEL BEAM. PLACE WITHIN A 3FT. ZONE FROM EDGE OF SLAB. REF 7/S6.04 AND 8/S6.04.
18. INTERNAL TIE REINFORCEMENT SHALL BE CONTINUOUS AND EVENLY DISTRIBUTED BETWEEN COLUMN LINES, DO NOT PLACE DIRECTLY ABOVE STEEL BEAM.
19. PERIPHERAL AND INTERNAL TIE REINFORCEMENT SHALL HAVE STAGGERED LAP SPLICES AND BE PLACED WITHIN THE MIDDLE 60% AREA OF BAY.
20. INTERNAL TIE REINFORCEMENT SHALL BE ANCHORED TO PERIPHERAL TIE REINFORCEMENT WITH SEISMIC HOOKS.
21. PERIPHERAL TIE REINFORCEMENT SHALL BE DEVELOPED INTO THE SLAB FOR ITS FULL TENSION CAPACITY AT RE-ENTRANT CORNERS. EXTEND PERIPHERAL TIES (1) LAP SPLICE BEYOND RE-ENTRANT CORNER FRAMING
22. INDICATES 600S162-43 @ 16" o.c. METAL STUD SHEAR WALL. PROVIDE 5/8" CDX STRUCTURAL I SHEATHING w/ #6x3/4" SMS @ 6" o.c. AT PANEL EDGES AND @ 12" o.c. AT FIELD CONDITION. BLOCK ALL SHEATHINGS PANEL EDGES.

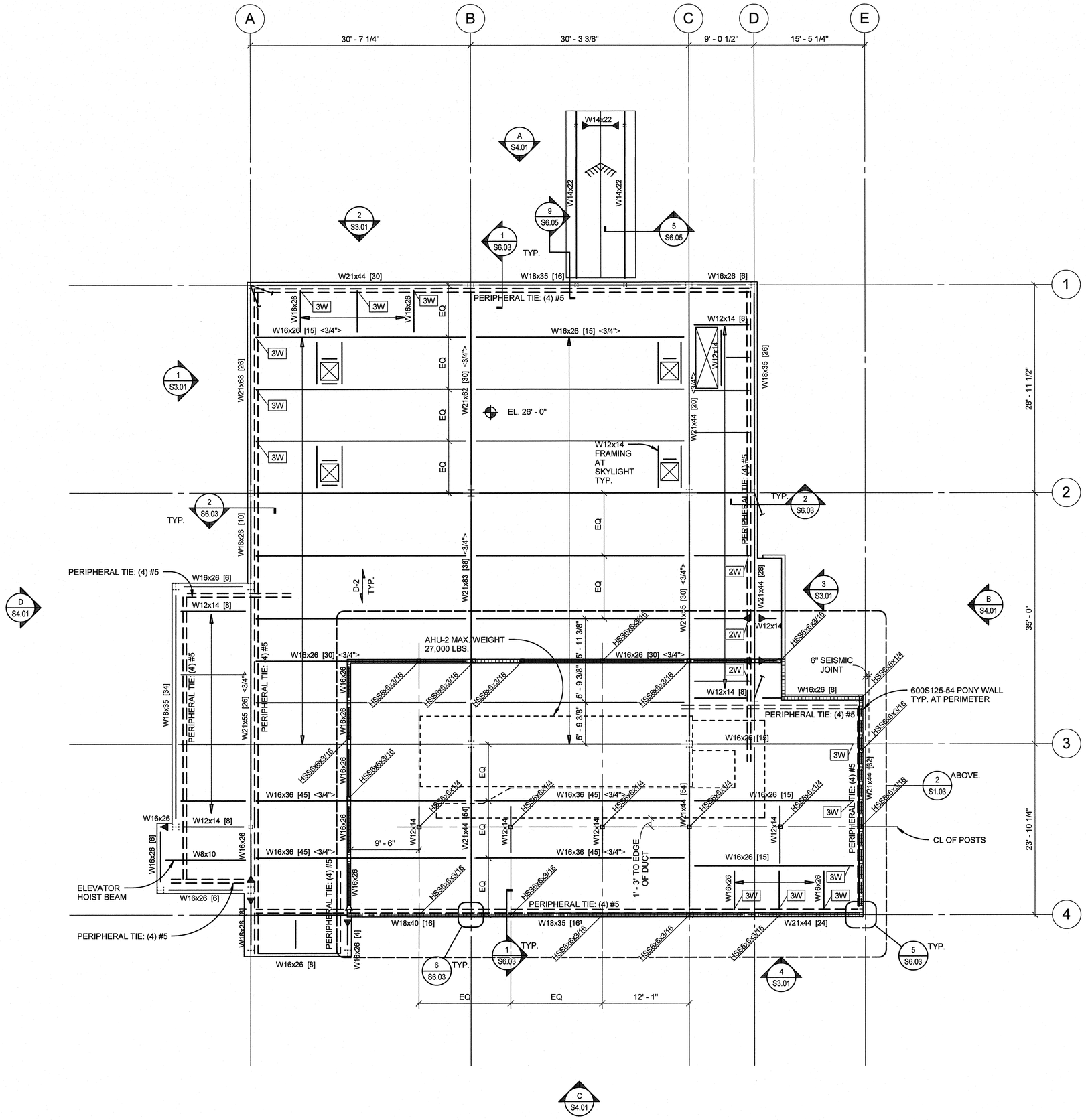

1 ROOF FRAMING PLAN
1/8" = 1'-0"

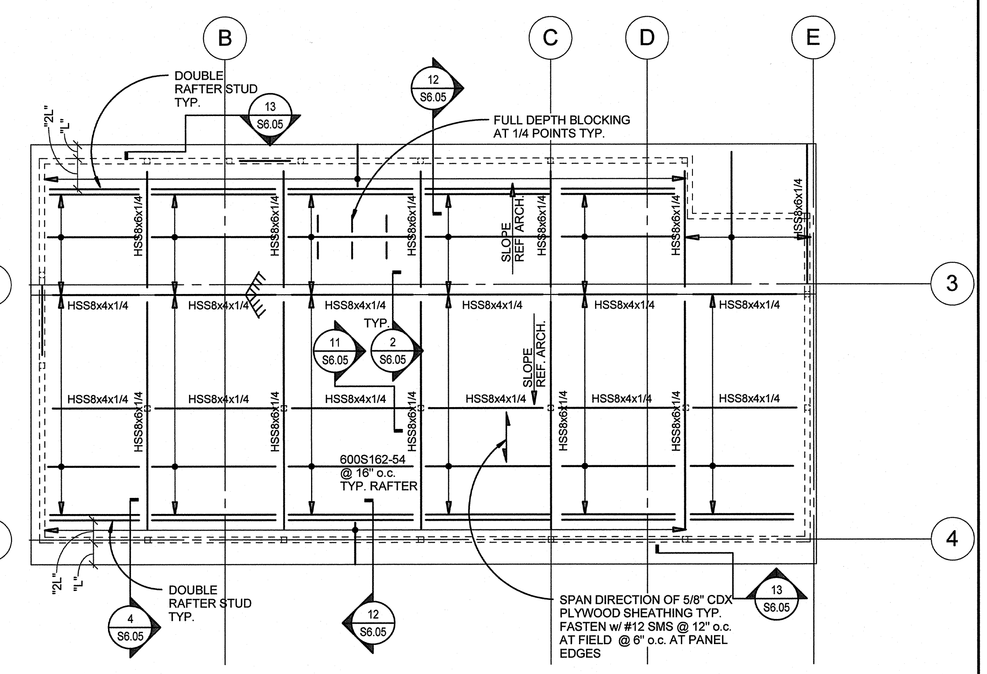

2 PARTIAL PLAN AT HIGH ROOF
1/8" = 1'-0"
S1.03

Revisions	Date

pka ARCHITECTS

PETERSEN KOLBERG & ASSOCIATES ARCHITECTS/PLANNERS
6969 SW Hampton Street
Portland, OR 97223
phone: 503-968-6800
fax: 503-968-6860
www.pkaarchitects.com

REGISTERED PROFESSIONAL ENGINEER — OREGON — M. BRADLY MOYER — EXPIRES 12-31-16

DEPARTMENT OF VETERANS AFFAIRS
SOUTHERN OREGON REHABILITATION CENTER & CLINICS
8495 Crater Lake Highway, White City, Oregon 97503-3012

kpff
111 SW Fifth Ave., Suite 2500
Portland, OR 97204
O: 503.227.3251
F: 503.227.7980
www.kpff.com

Drawing Title: ROOF FRAMING PLAN

SPECIALTY CARE BUILDING - 201B

Approved: Proj Eng	Approved: Infect Cont	Approved: Chief P&O	Approved: Chief M&R	Approved: Safety Mgr.
Approved: Service Chief	Approved: Chief Facilities Mgmt	Approved: VAMC Director		

Building No.	Chkd By/Proj. Mgr	Drawn By
Building 201B	NR	CB

Location

Date: 11/27/15
Project No.: 131207
Drawing No.: S1.03
Dwg. of

U.S. DEPARTMENT OF VETERANS AFFAIRS

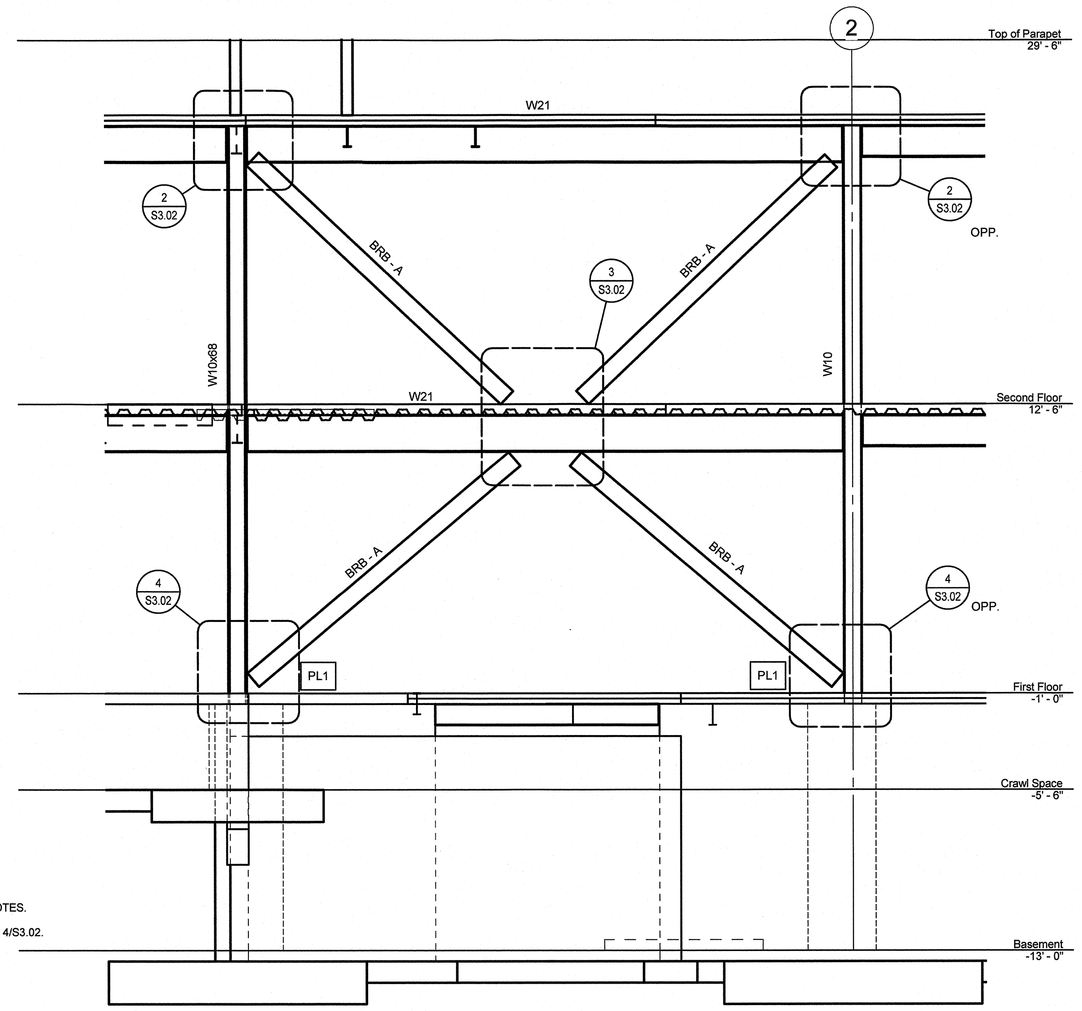

NOTES:

1. REF. 1/S3.02 FOR BUCKLING RESTRAINED BRACE FRAME NOTES.
2. PLX INDICATES BASE PL TYPE. REF. 4/S3.02.

3 BRACE FRAME ELEVATION GRID D

1/4" = 1'-0" S1.01

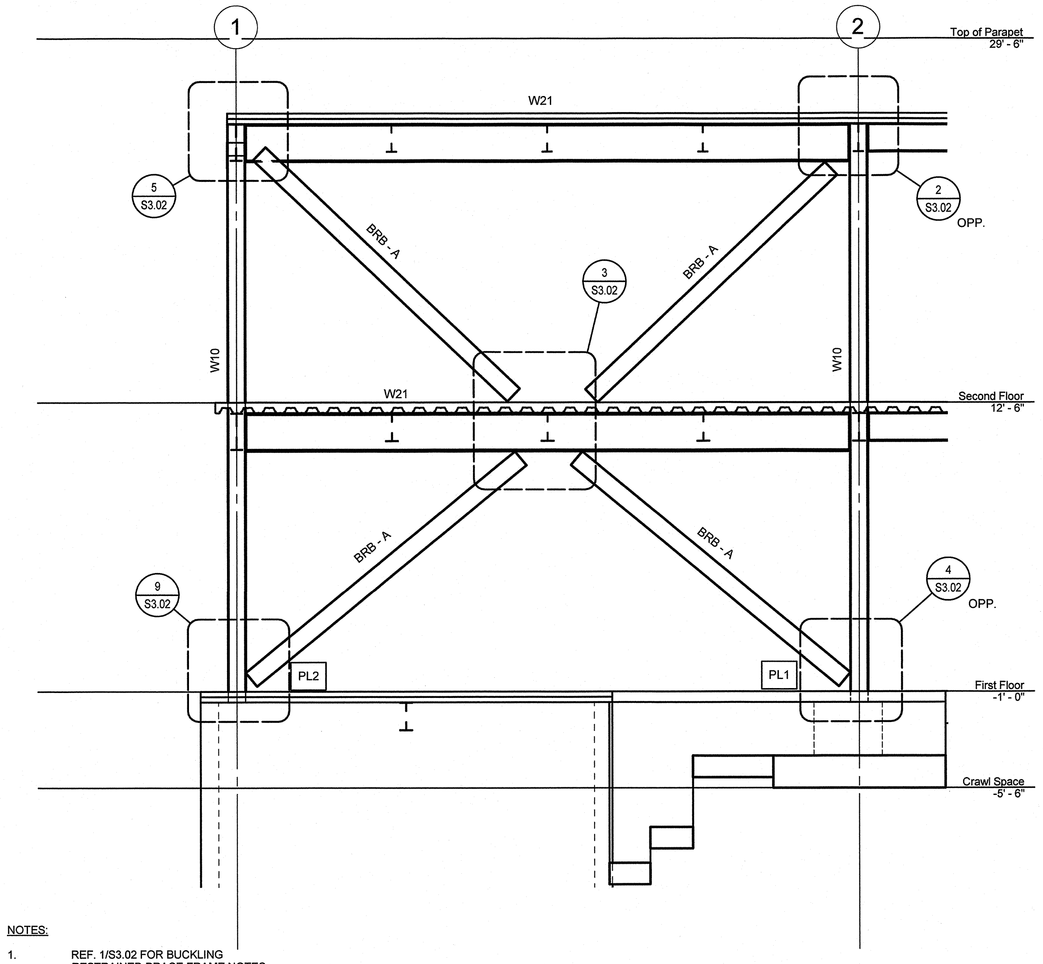

NOTES:

1. REF. 1/S3.02 FOR BUCKLING RESTRAINED BRACE FRAME NOTES.
2. PLX INDICATES BASE PL TYPE. REF. 4/S3.02.

1 BRACE FRAME ELEVATION GRID A

1/4" = 1'-0" S1.01

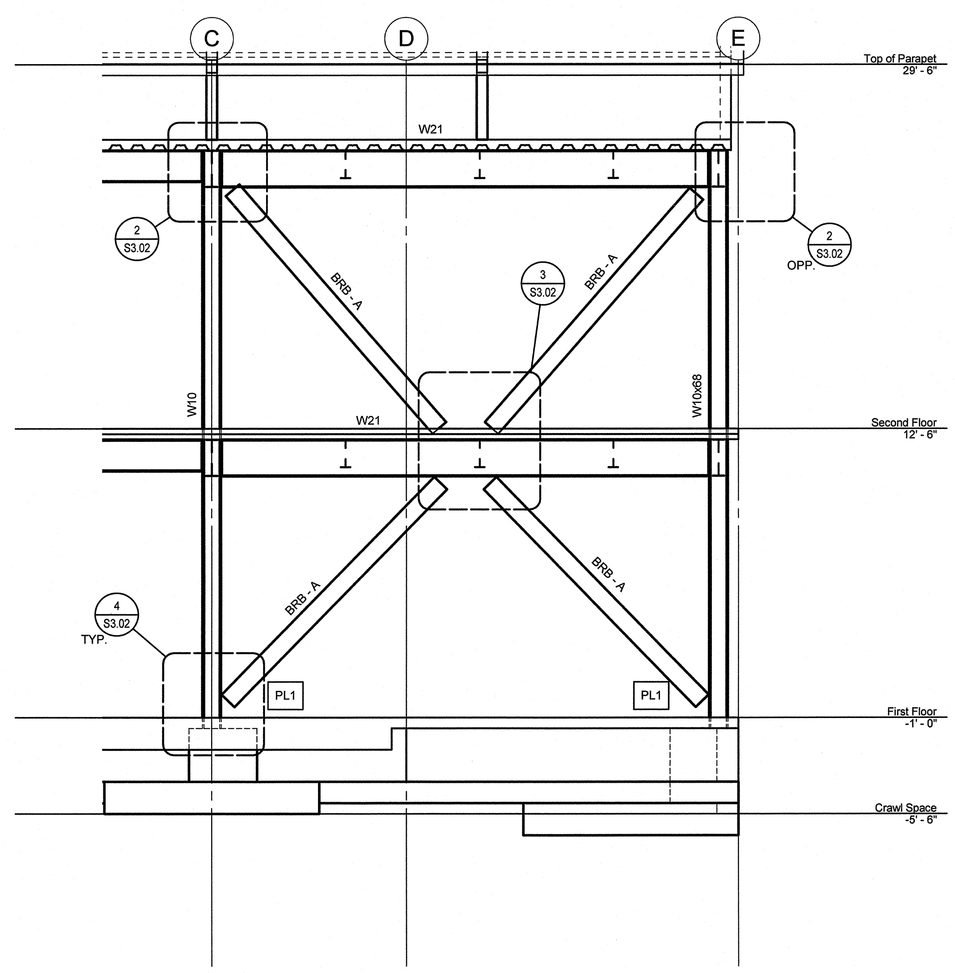

NOTES:

1. REF. 1/S3.02 FOR BUCKLING RESTRAINED BRACE FRAME NOTES.
2. PLX INDICATES BASE PL TYPE. REF. 4/S3.02.

4 BRACE FRAME ELEVATION GRID 4

1/4" = 1'-0" S1.01

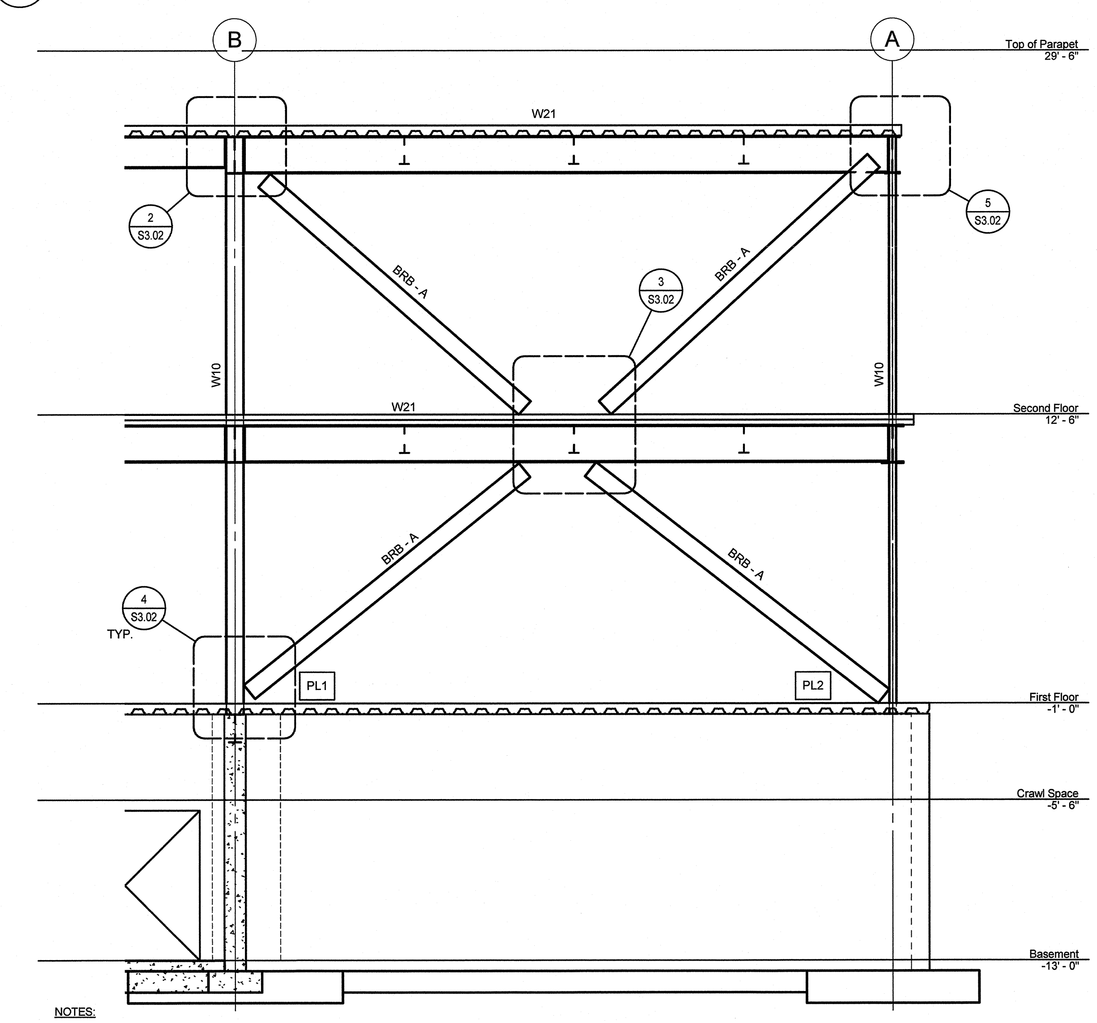

NOTES:

1. REF. 1/S3.02 FOR BUCKLING RESTRAINED BRACE FRAME NOTES.
2. PLX INDICATES BASE PL TYPE. REF. 4/S3.02.

2 BRACE FRAME ELEVATION GRID 1

1/4" = 1'-0" S1.01

Revisions	Date

pka ARCHITECTS

PETERSEN KOLBERG & ASSOCIATES
ARCHITECTS/PLANNERS
6969 SW Hampton Street
Portland, OR 97223
phone: 503-968-6800
fax: 503-968-6860
www.pkaarchitects.com

STRUCTURAL REGISTERED PROFESSIONAL ENGINEER OREGON M. BRADLY MOYES
EXPIRES 12-31-16

DEPARTMENT OF VETERANS AFFAIRS
SOUTHERN OREGON REHABILITATION CENTER & CLINICS
8495 Crater Lake Highway, White City, Oregon 97503-3012

kpff
111 SW Fifth Ave., Suite 2500
Portland, OR 97204
O: 503.227.3251
F: 503.227.7980
www.kpff.com

Drawing Title: BRBF FRAMING ELEVATIONS

SPECIALTY CARE BUILDING - 201B

Approved: Proj Eng	Approved: Infect Cont	Approved: Chief P&O	Approved: Chief M&R	Approved: Safety Mgr.
Approved: Service Chief	Approved: Chief Facilities Mgmt	Approved: VAMC Director		

Building No.	Chkd By/Proj. Mgr	Drawn By
Building 201B	NR	CB

Location

Date: 11/27/15
Project No.: 131207
Drawing No.: S3.01
Dwg. of

US DEPARTMENT OF VETERANS AFFAIRS

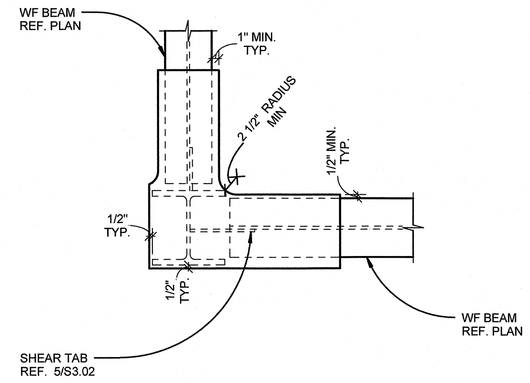

6 BRBF CORNER COLUMN CAP PLATE

1" = 1'-0" S3.02

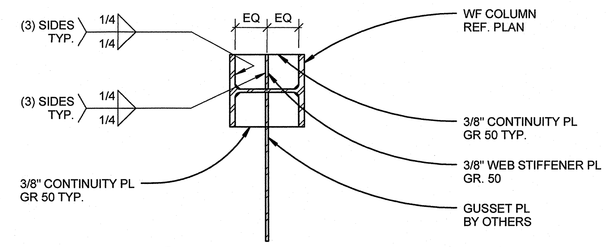

A GUSSET CONDITION

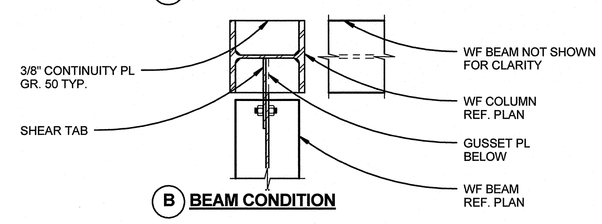

B BEAM CONDITION

7 BRBF CONTINUITY PLATE

1" = 1'-0" S3.02

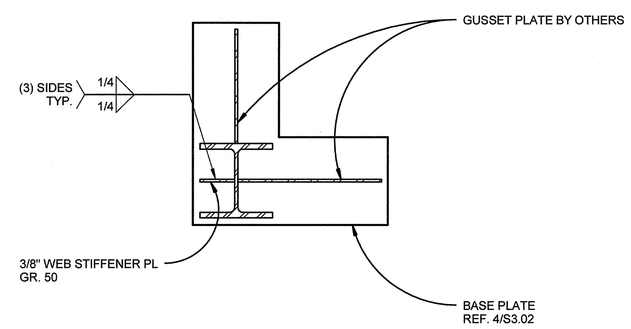

8 CORNER COLUMN BASE CONNECTION GUSSET ARRANGEMENT

1" = 1'-0" S3.02

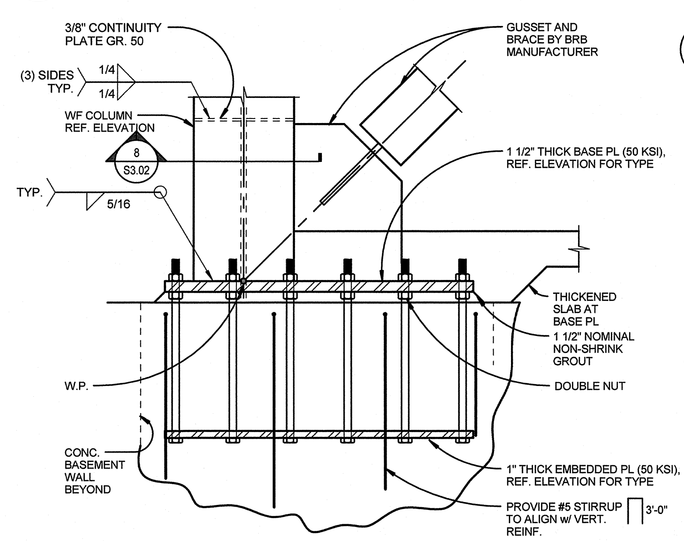

9 BRBF BASE WITH GUSSET PLATE TO COLUMN WEB DETAIL

1" = 1'-0" S3.01

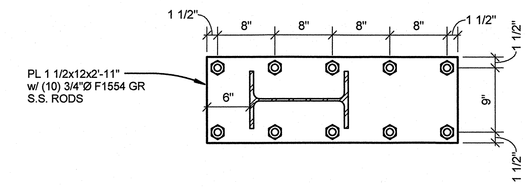

PLATE TYPE 1

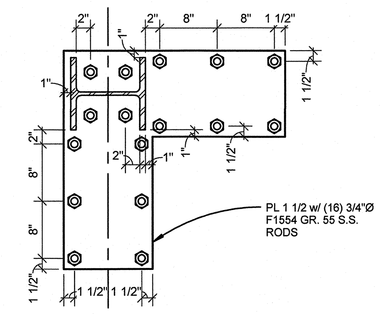

PLATE TYPE 2

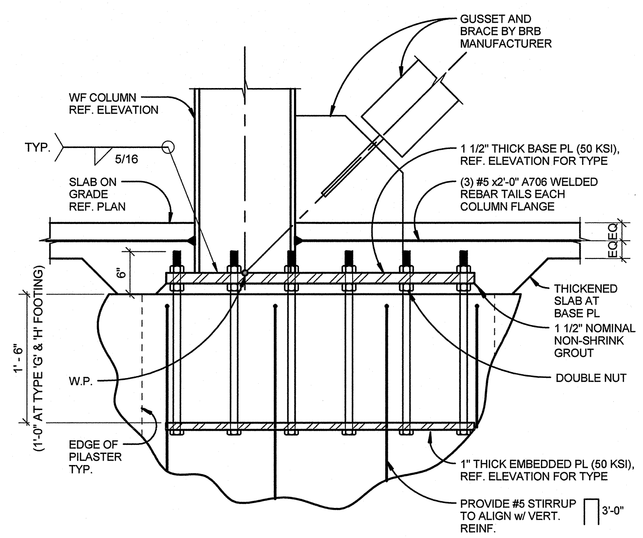

4 TYPICAL BRBF BASE DETAIL

1" = 1'-0" S3.01

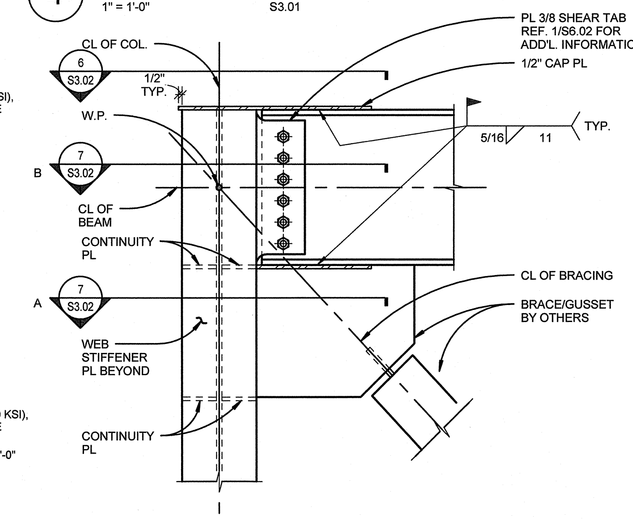

5 BRBF TOP CONN. TO COLUMN WEB

1" = 1'-0" S3.01

BUCKLING RESTRAINED BRACED FRAME GENERAL NOTES:

1. BRB X — INDICATES BUCKLING RESTRAINED BRACE MARK. X INDICATES BRACE MEMBER. REF. BUCKLING RESTRAINED BRACE STEEL CORE AREA SCHEDULE BELOW.
2. DESIGN OF BUCKLING RESTRAINED BRACE MEMBERS, INCLUDING CONNECTIONS AND GUSSET PLATES, SHALL BE BY CONTRACTOR.
3. STEEL CORE YIELD STRENGTH, F_{ysc} = 42 KSI (±4 KSI). COUPON TESTS REQUIRED. REF. SPECIFICATIONS.
4. ALL WORK POINTS ARE LOCATED AT THE INTERSECTION OF THE GEOMETRIC CENTERS OF ALL MEMBERS (COLUMNS, BEAMS AND DIAGONALS).
5. MAXIMUM CASING SIZE IS 0'-6"x0'-6" (OUT TO OUT).
6. THE FOLLOWING DESIGN VALUES WERE USED:
   - COMPRESSION STRENGTH ADJUSTMENT FACTOR β=1.00
   - TENSION STRENGTH ADJUSTMENT FACTOR ω=1.30
   - VALUES DETERMINED FROM QUALIFICATION TESTS NOT TO EXCEED THE ABOVE VALUES
7. ALL BEAMS, COLUMNS, BRACES, AND CONNECTIONS WITHIN EACH FRAME ARE PART OF THE SLRS.
8. WELDED, BOLTED, SCREWED OR SHOT-IN ATTACHMENTS FOR PERIMETER EDGE ANGLES, EXTERIOR FACADES, PARTITIONS, DUCT WORK, PIPING OR OTHER CONSTRUCTION SHALL NOT BE PLACED WITHIN THE PROTECTED ZONE. THE BRBF PROTECTED ZONE SHALL INCLUDE THE STEEL CORE OF BRACING MEMBERS AND ELEMENTS THAT CONNECT THE STEEL CORE TO BEAMS AND COLUMNS
9. BRACE TO GUSSET SHALL BE FIELD BOLTED CONNECTION.

BUCKING RESTRAINED BRACE STEEL CORE AREA SCHEDULE:

BRACE	A_{sc}(IN^2)
A	2.0

NOTE:
A_{sc} INDICATES STEEL CORE AREA.

1 BUCKLING RESTRAINED BRACED FRAME NOTES

1" = 1'-0"

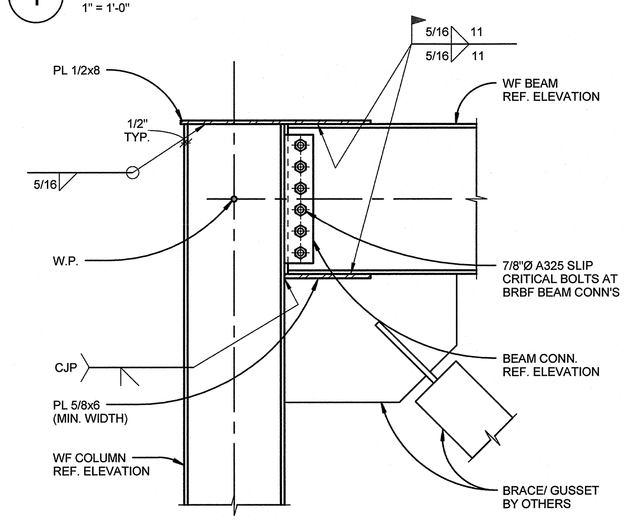

2 TYPICAL BRBF TOP CONNECTION

1" = 1'-0" S3.01

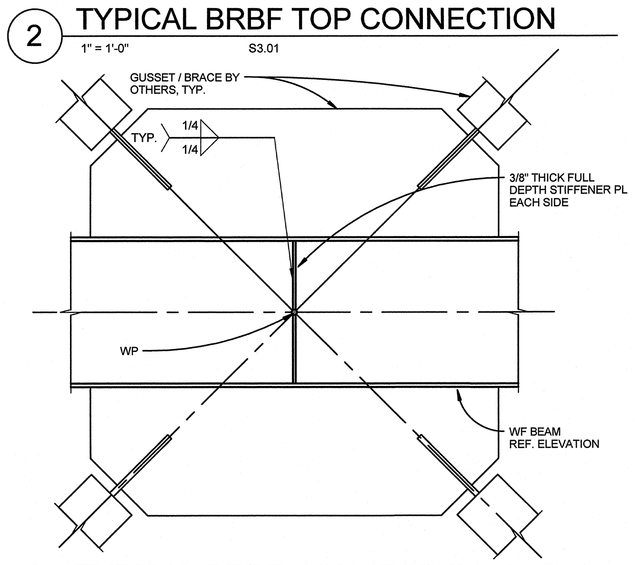

3 TYPICAL BRBF CONNECTION DETAIL

1" = 1'-0" S3.01

Revisions	Date

pka ARCHITECTS

PETERSEN KOLBERG & ASSOCIATES
ARCHITECTS/PLANNERS
6969 SW Hampton Street
Portland, OR 97223
phone: 503-968-6800
fax: 503-968-6860
www.pkaarchitects.com

REGISTERED PROFESSIONAL ENGINEER
M. BRADLY MOYER
OREGON
EXPIRES 12-31-16

DEPARTMENT OF VETERANS AFFAIRS
SOUTHERN OREGON REHABILITATION CENTER & CLINICS
8495 Crater Lake Highway, White City, Oregon 97503-3012

kpff
111 SW Fifth Ave., Suite 2500
Portland, OR 97204
O: 503.227.3251
F: 503.227.7980
www.kpff.com

Drawing Title: TYPICAL BRACED FRAME DETAILS

SPECIALTY CARE BUILDING - 201B

Date: 11/27/15
Project No. 131207

Approved: Proj Eng | Approved: Infect Cont | Approved: Chief P&O | Approved: Chief M&R | Approved: Safety Mgr.

Building No. Building 201B | Chkd By/Proj. Mgr NR | Drawn By CB | Drawing No. S3.02 | Dwg. of

Approved: Service Chief | Approved: Chief Facilities Mgmt | Approved: VAMC Director | Location

DO NOT SCALE DRAWINGS
INSTRUMENT OF SERVICE

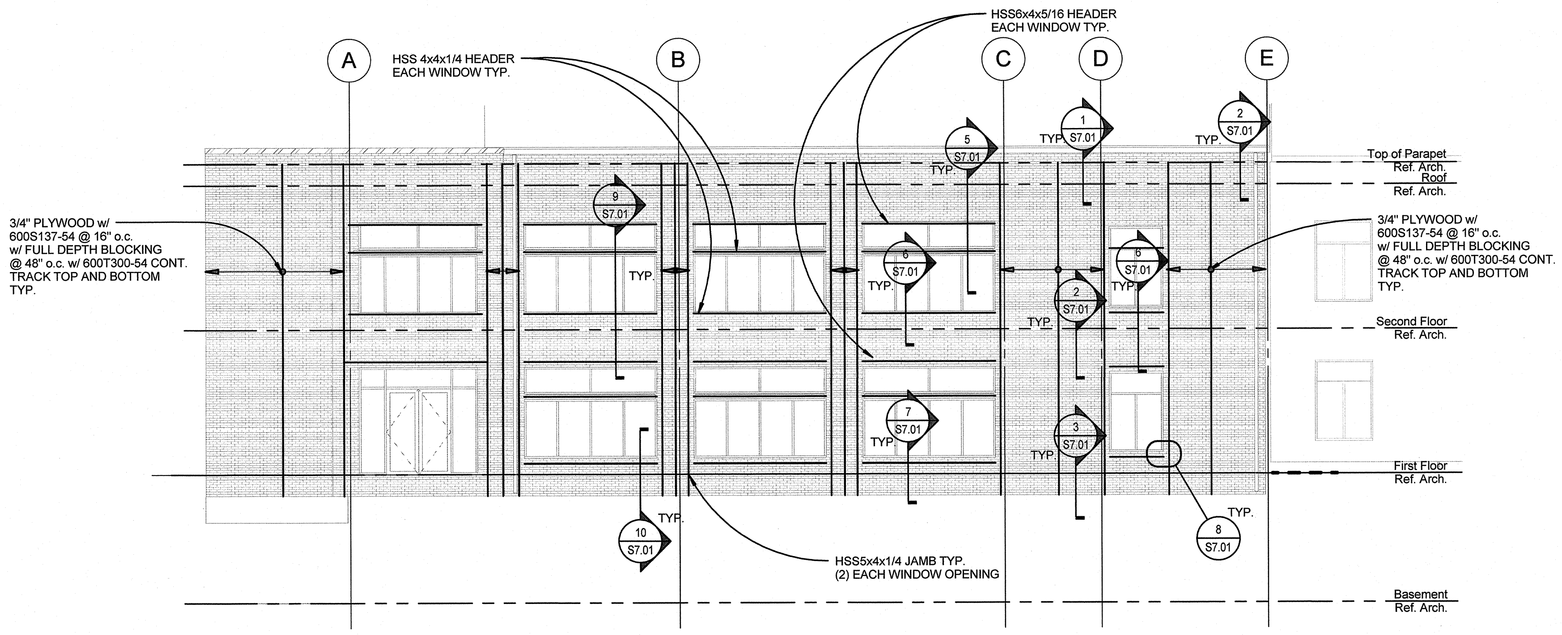

C SOUTH ELEVATION

1/8" = 1'-0" S1.01

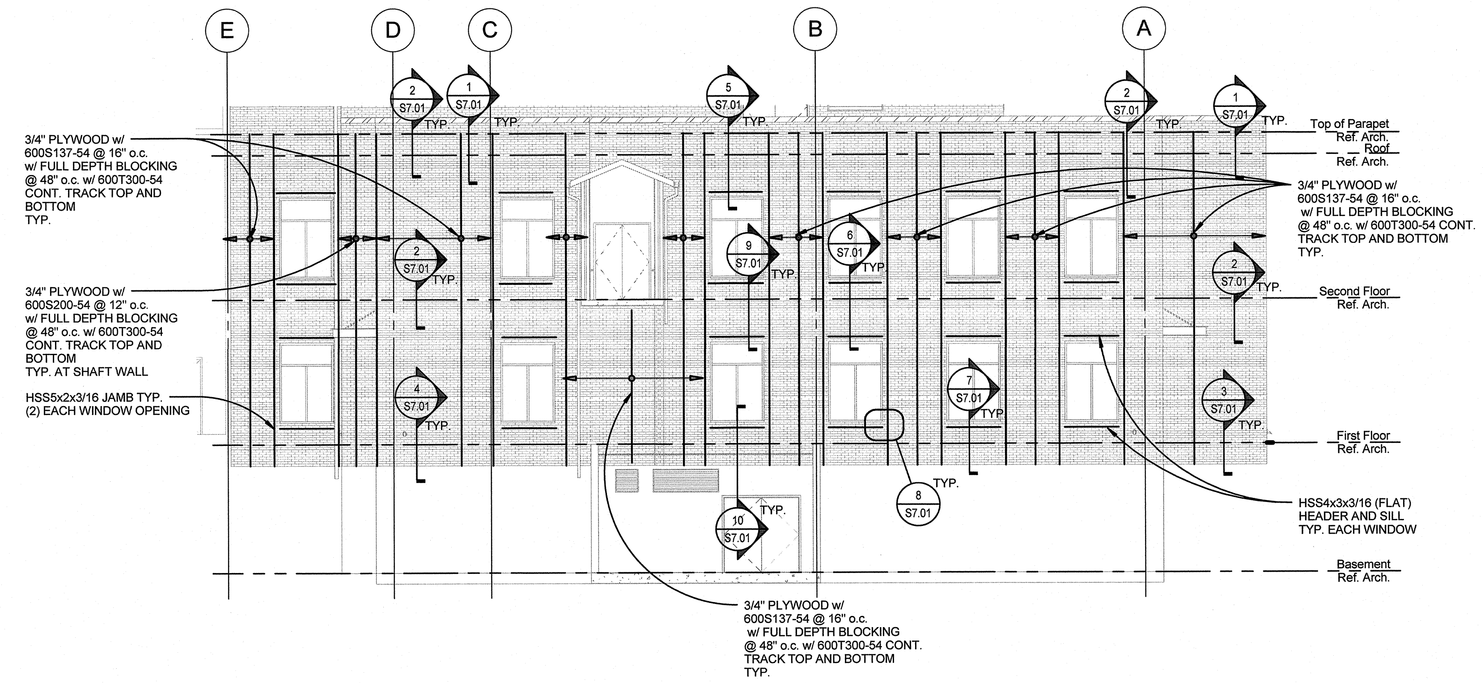

A NORTH ELEVATION

1/8" = 1'-0" S1.01

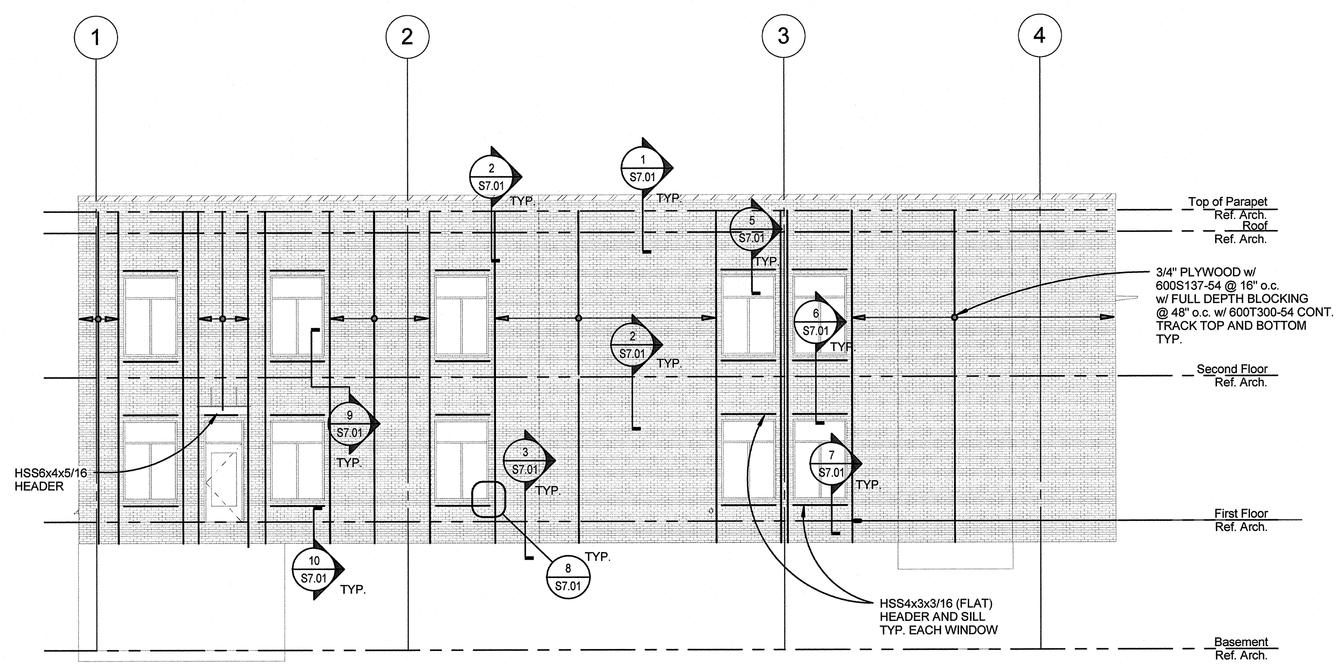

D WEST ELEVATION

1/8" = 1'-0" S1.01

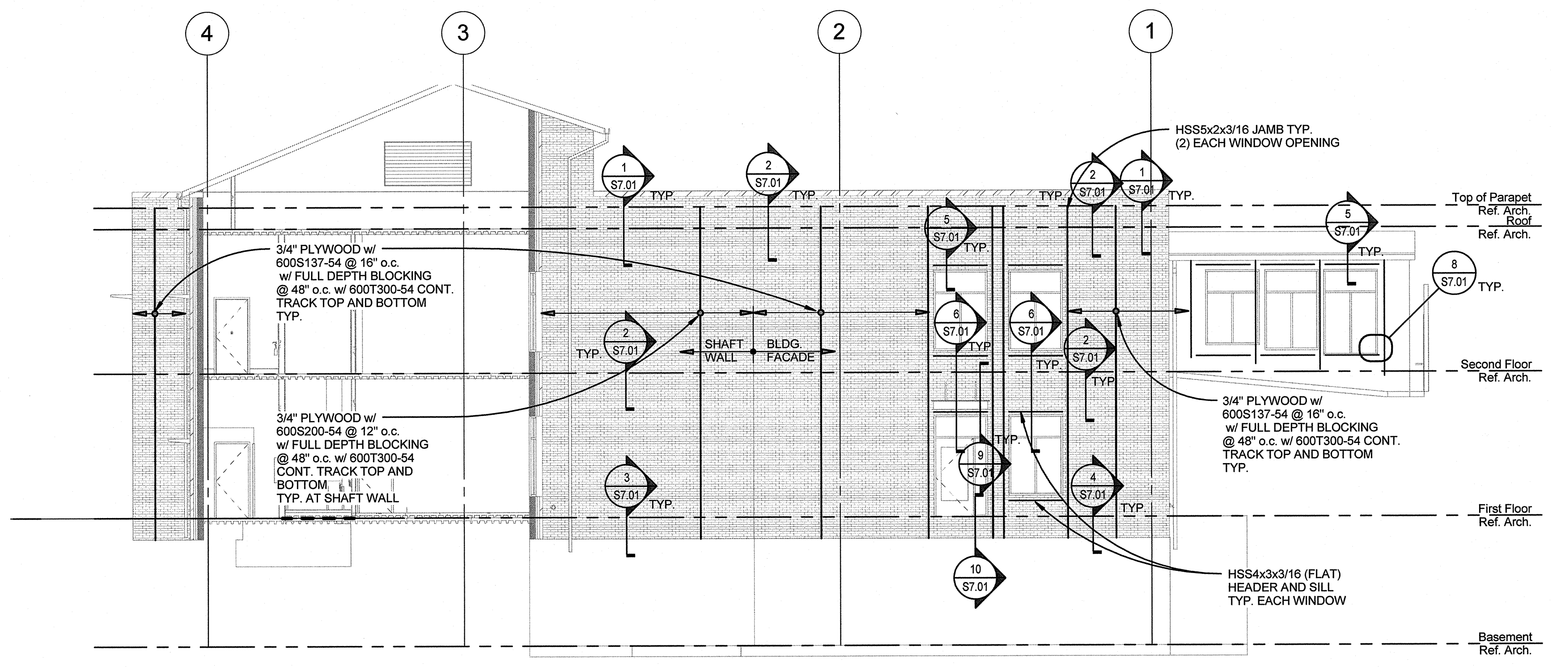

B EAST ELEVATION

1/8" = 1'-0" S1.01

Revisions	Date
1	

pka ARCHITECTS

PETERSEN KOLBERG & ASSOCIATES ARCHITECTS/PLANNERS
6960 SW Hampton Street
Portland, OR 97223
phone: 503-968-6800
fax: 503-968-6860
www.pkaarchitects.com

STRUCTURAL REGISTERED PROFESSIONAL ENGINEER OREGON JULY 13, 2012 M. BRADLY MOYES
EXPIRES 12-31-16

DEPARTMENT OF VETERANS AFFAIRS
SOUTHERN OREGON REHABILITATION CENTER & CLINICS
8495 Crater Lake Highway, White City, Oregon 97503-3012

kpff
111 SW Fifth Ave., Suite 2500
Portland, OR 97204
O: 503.227.3251
F: 503.227.7980
www.kpff.com

Drawing Title: EXTERIOR ELEVATIONS

SPECIALTY CARE BUILDING - 201B

Approved: Proj Eng | Approved: Infect Cont | Approved: Chief P&O | Approved: Chief M&R | Approved: Safety Mgr.

Approved: Service Chief | Approved: Chief Facilities Mgmt | Approved: VAMC Director

Building No.: Building 201B | Chkd By/Proj. Mgr: NR | Drawn By: CB | Location

Date: 11/27/15

Project No.: 131207

Drawing No.: S4.01

Dwg. of

US DEPARTMENT OF VETERANS AFFAIRS

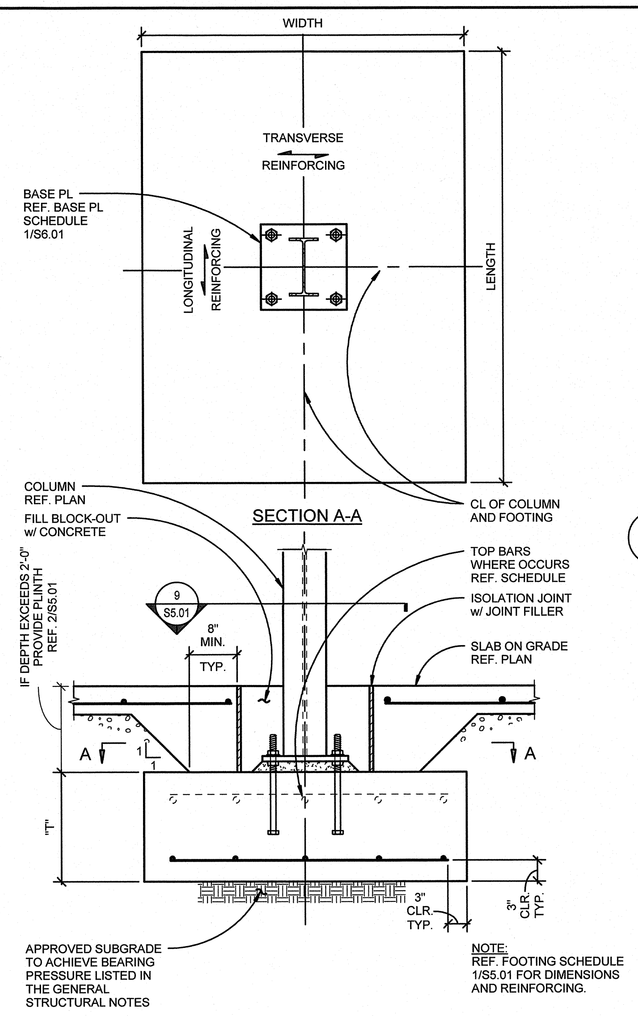

10 FOOTING DETAIL AT STEEL COLUMN
1" = 1'-0" S1.01

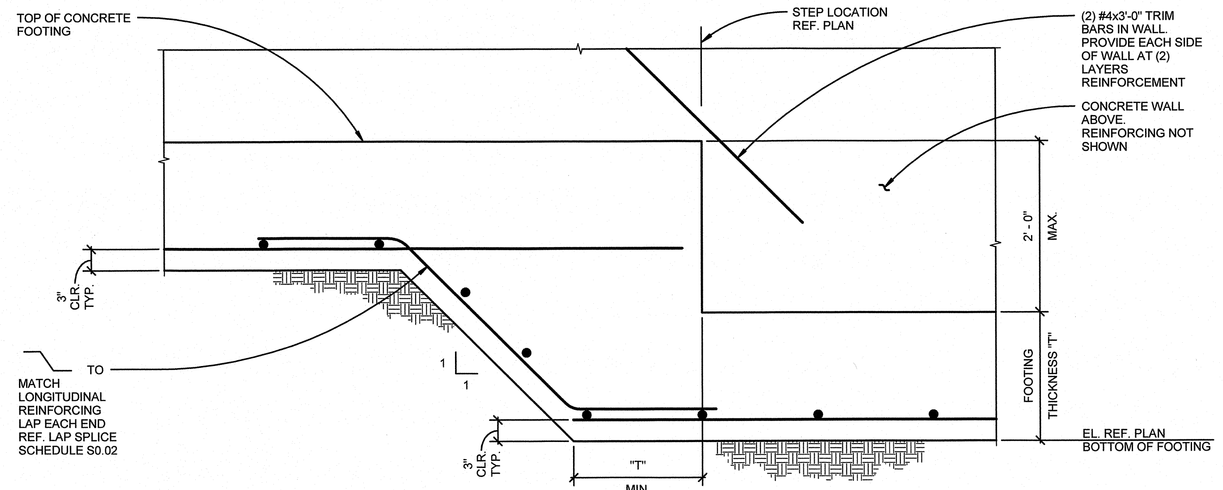

5 TYP. STEPPED WALL FOOTING DETAIL
1" = 1'-0"

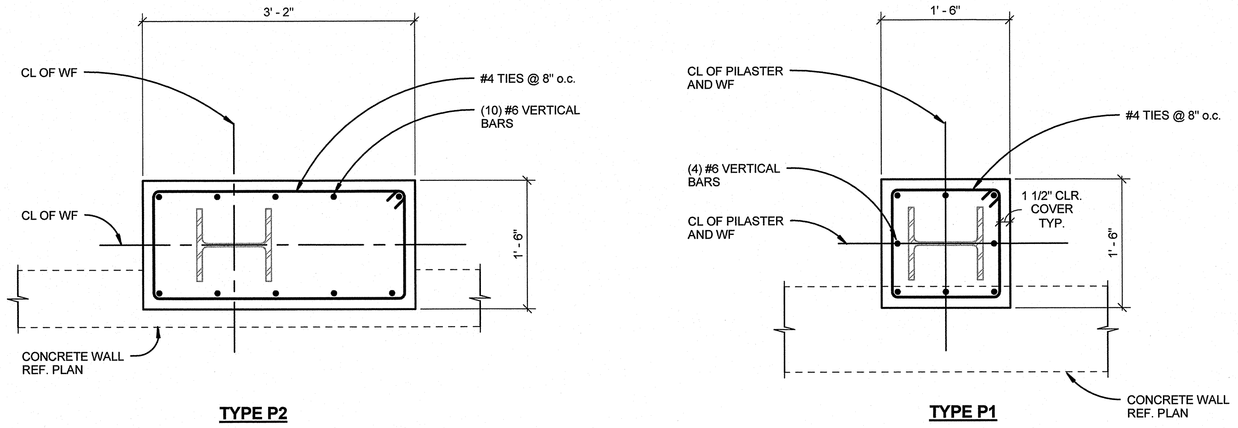

6 PILASTER TYPES
1" = 1'-0"

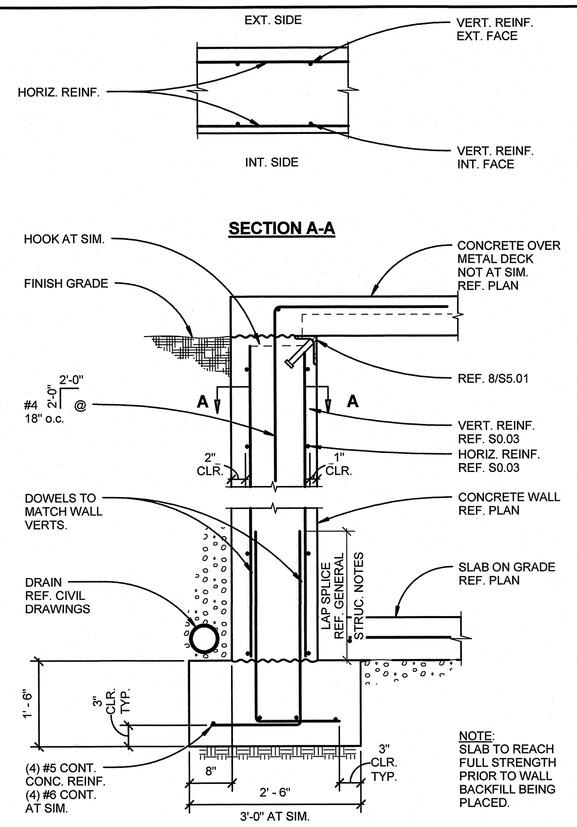

3 TYPICAL BASEMENT WALL
1" = 1'-0" S1.00

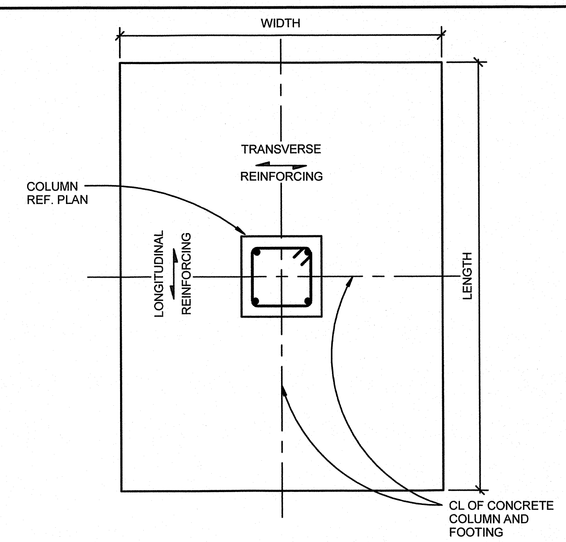

FOOTING SCHEDULE			
MARK	SIZE LENGTHxWIDTH	"T"	REINFORCING
A	4'-0"x4'-0"	1'-6"	(8) #6 EACH WAY ✱ (8) #5 EACH WAY TOP REINF.
B	6'-0"x6'-0"	1'-6"	(8) #6 EACH WAY
C	8'-0"x8'-0"	1'-6"	(9) #6 EACH WAY
D	10'-0"x10'-0"	1'-6"	(9) #7 EACH WAY ✱ (9) #5 EACH WAY TOP REINF.
E	12'-0"x12'-0"	2'-0"	(15) #6 EACH WAY ✱(11) #5 EACH WAY TOP REINF.
F	12'-0"x4'-0"	1'-6"	(5) #6 TOP AND BOTTOM TRANS. (13) #5 TOP AND BOTTOM LONG.

NOTES:

1. ✱ INDICATES TOP REINFORCING MAT. REF. PLAN FOR LOCATIONS OF FOOTINGS WITH TOP MAT REQUIRED.

1 TYPICAL FOOTING DETAIL AND SCHEDULE
1" = 1'-0"

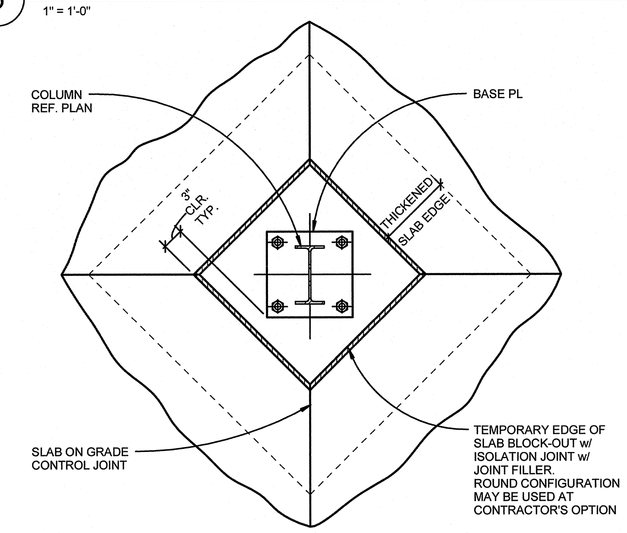

9 ISOLATION JOINT AT COLUMN
1" = 1'-0" S5.01

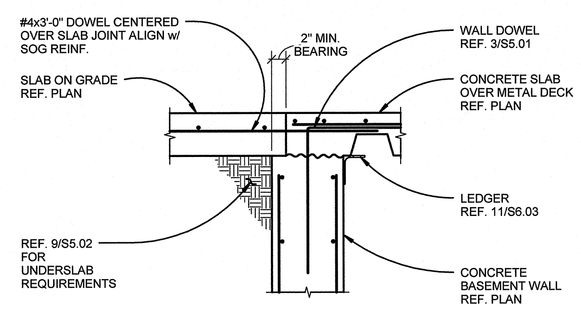

7 SLAB ON GRADE/SLAB ON DECK TRANSITION DECK PARRALEL TO WALL
1" = 1'-0" S1.01

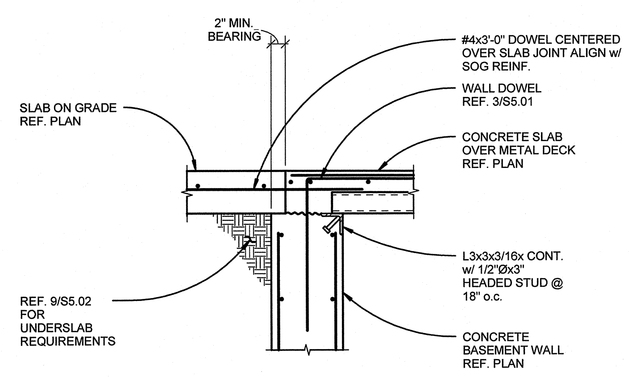

8 SLAB ON GRADE/SLAB ON DECK TRANSITION DECK PERPENDICULAR TO WALL
1" = 1'-0" S1.01

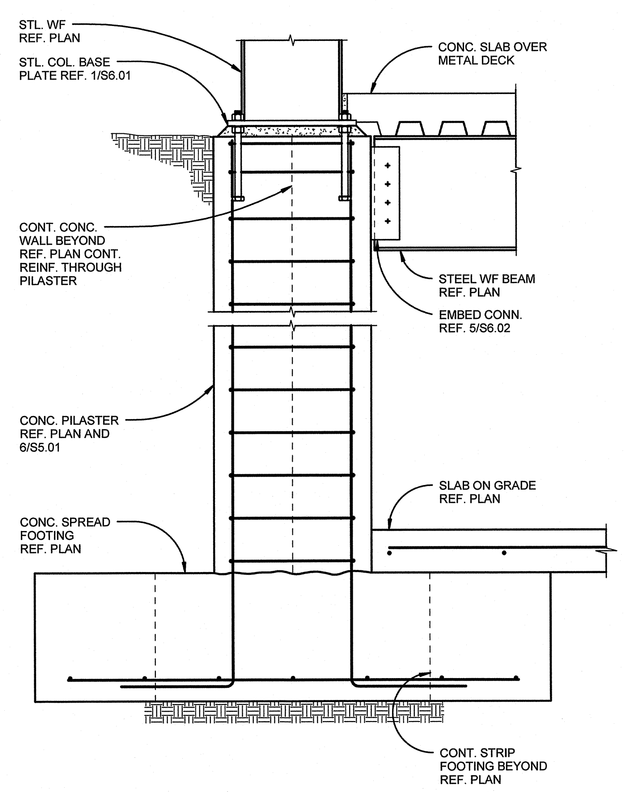

4 TYPICAL PILASTER AT CONC. WALL
1" = 1'-0" S1.00

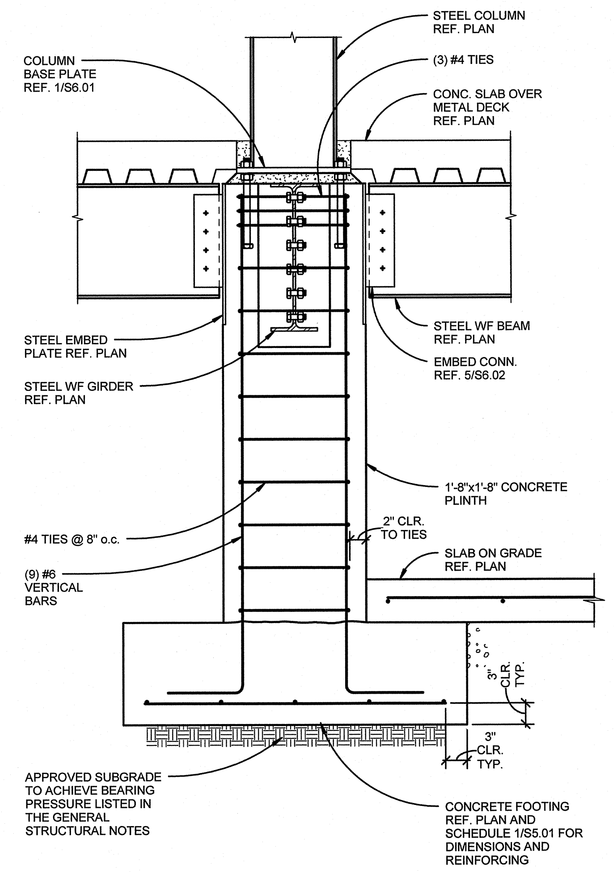

2 TYP. PLINTH AND FOOTING DETAIL
1" = 1'-0" S1.00

Revisions	Date

pka ARCHITECTS

PETERSEN KOLBERG & ASSOCIATES ARCHITECTS/PLANNERS
6969 SW Hampton Street
Portland, OR 97223
phone: 503-968-6800
fax: 503-968-6860
www.pkaarchitects.com

STRUCTURAL REGISTERED PROFESSIONAL ENGINEER OREGON JULY 11, 2014 W. BRADLY MOYER
EXPIRES 12-31-16

DEPARTMENT OF VETERANS AFFAIRS
SOUTHERN OREGON REHABILITATION CENTER & CLINICS
8495 Crater Lake Highway, White City, Oregon 97503-3012

kpff
111 SW Fifth Ave., Suite 2500
Portland, OR 97204
O: 503.227.3251
F: 503.227.7980
www.kpff.com

Drawing Title: TYPICAL CONCRETE DETAILS

SPECIALTY CARE BUILDING - 201B

Date: 11/27/15
Project No.: 131207

Approved: Proj Eng | Approved: Infect Cont | Approved: Chief P&O | Approved: Chief M&R | Approved: Safety Mgr.
Approved: Service Chief | Approved: Chief Facilities Mgmt | Approved: VAMC Director

Building No.: Building 201B | Chkd By/Proj. Mgr: NR | Drawn By: CB | Location

Drawing No.: S5.01
Dwg. of

US DEPARTMENT OF VETERANS AFFAIRS

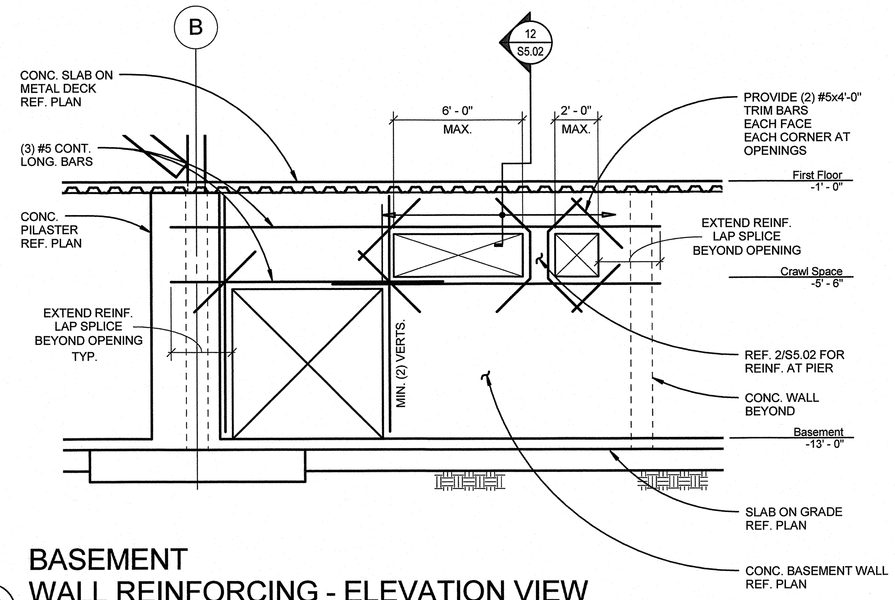

14 BASEMENT WALL REINFORCING - ELEVATION VIEW

1/4" = 1'-0" S1.00

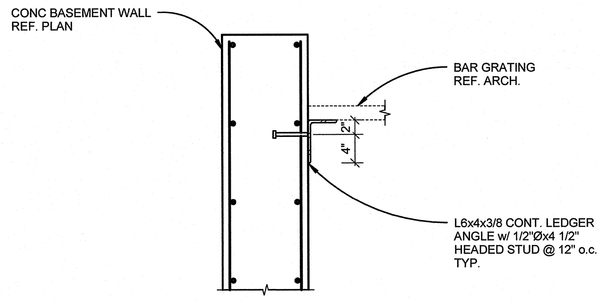

13 GRATING SUPPORT LEDGER

1" = 1'-0"

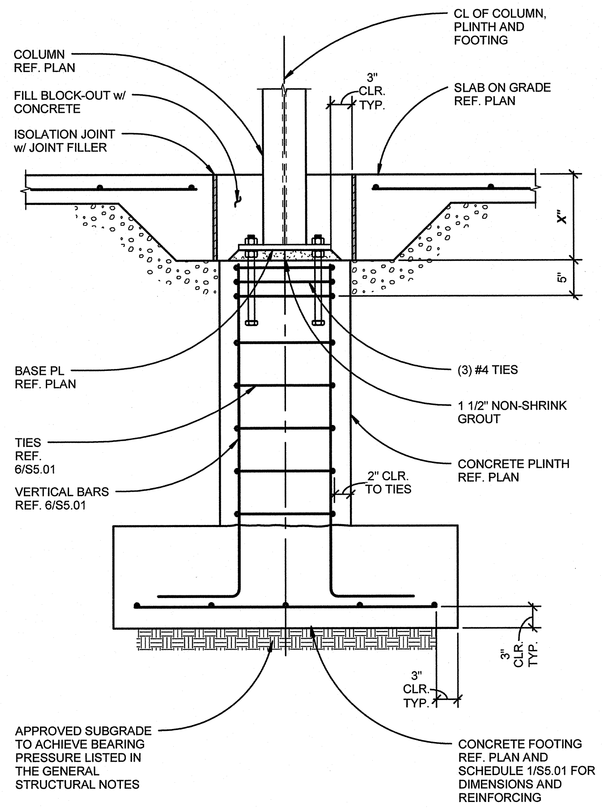

11 TYPICAL PLINTH AND FOOTING DETAIL

1" = 1'-0" S1.00

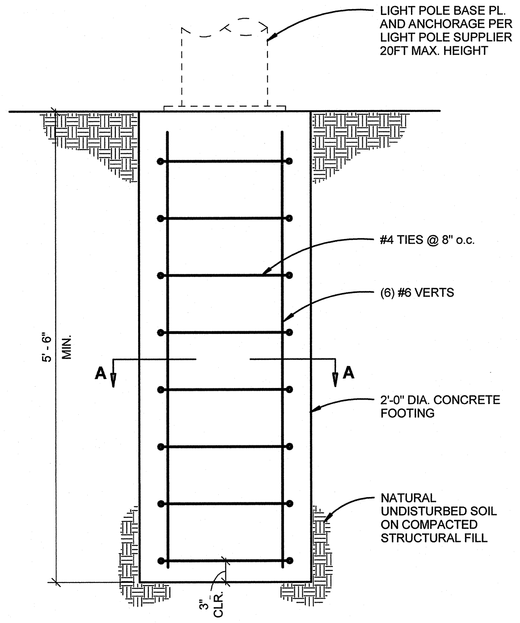

SECTION A-A

15 TYPICAL LIGHT POLE FOOTING

1" = 1'-0"

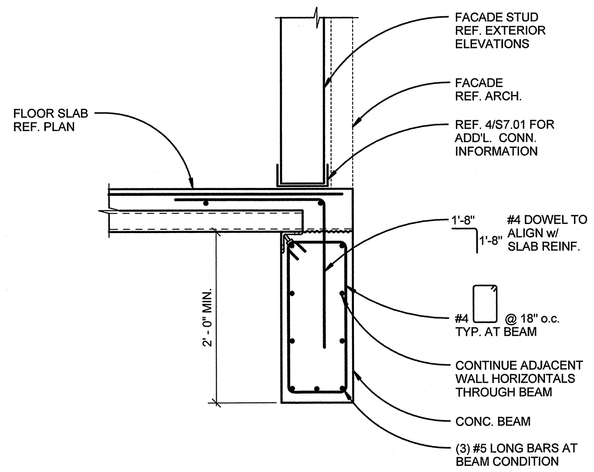

12 CONCRETE BEAM AT BASEMENT WALL

1" = 1'-0" S5.02

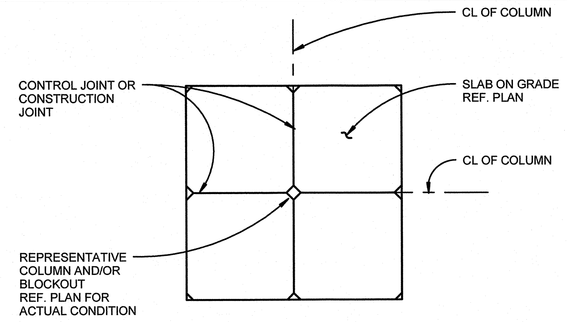

NOTES:

1. REF. PLAN FOR SLAB ON GRADE THICKNESS AND REINFORCEMENT.
2. CONTRACTOR SHALL SUBMIT SHOP DRAWINGS SHOWING JOINT LAYOUT FOR REVIEW AND APPROVAL BY ARCHITECT AND STRUCTURAL ENGINEER.
3. PROVIDE JOINTS ON ALL COLUMN LINES AND AT A MAXIMUM SPACING OF 36x THE SLAB THICKNESS EACH WAY
4. SAWED JOINTS SHALL BE MADE AS SOON AS THE JOINT CAN BE CUT WITHOUT EDGES RAVELING AND WITHIN 12 HOURS OF SLAB PLACEMENT.

8 JOINTS AT SLAB ON GRADE

1" = 1'-0"

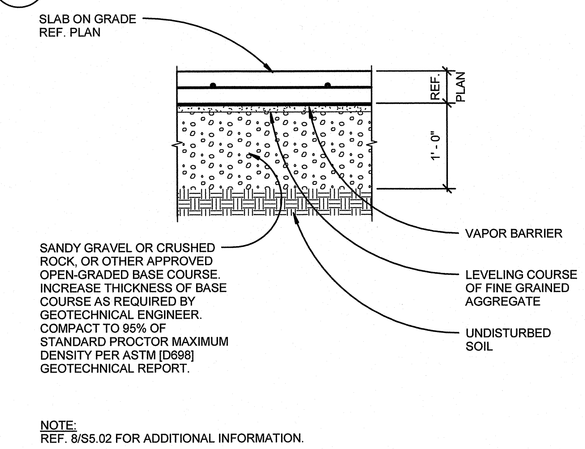

NOTE:
REF. 8/S5.02 FOR ADDITIONAL INFORMATION.

9 UNDERSLAB PREPARATION AT SLAB ON GRADE

1" = 1'-0"

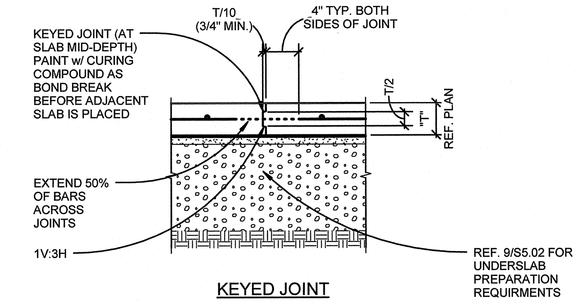

KEYED JOINT

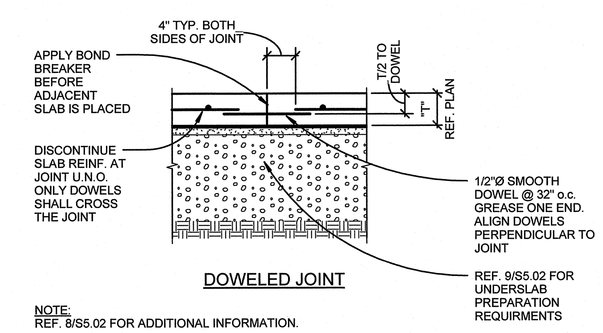

DOWELED JOINT

NOTE:
REF. 8/S5.02 FOR ADDITIONAL INFORMATION.

10 CONSTRUCTION JOINTS AT SLAB ON GRADE

1" = 1'-0"

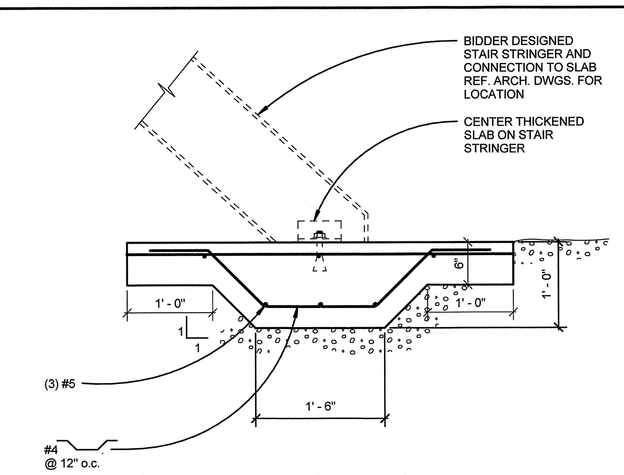

4 THICKENED SLAB AT STAIR STRINGER

1" = 1'-0"

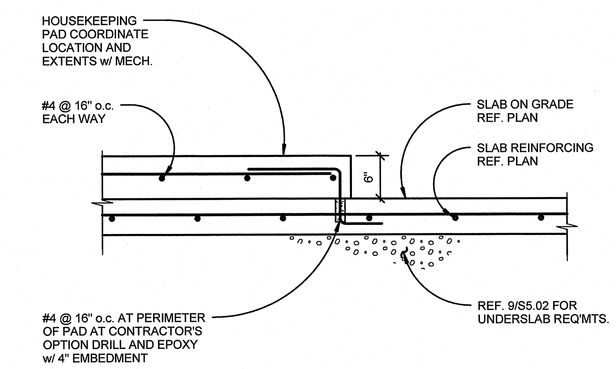

5 HOUSEKEEPING PAD AT SLAB ON GRADE

1" = 1'-0" S1.00

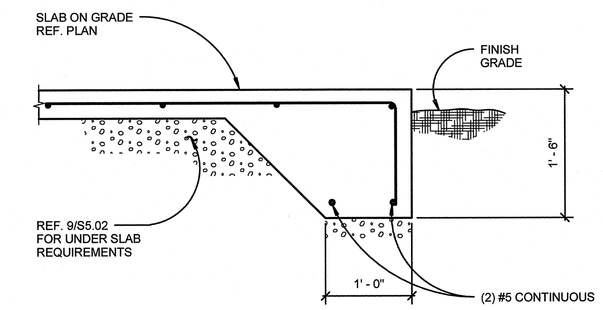

6 THICKENED SLAB ON GRADE EDGE DETAIL

1" = 1'-0" S1.01

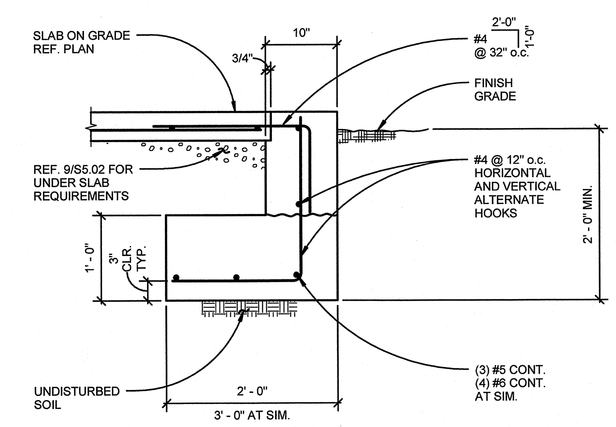

7 STEM WALL DETAIL

1" = 1'-0" S1.01

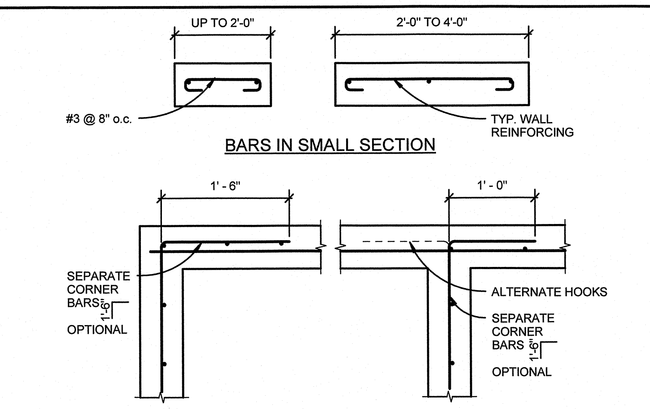

NOTE:
ABOVE DETAILS APPLY IN BOTH HORIZONTAL AND VERTICAL DIRECTIONS.

1 WALL DETAILS - SINGLE LAYER REINFORCING

1" = 1'-0"

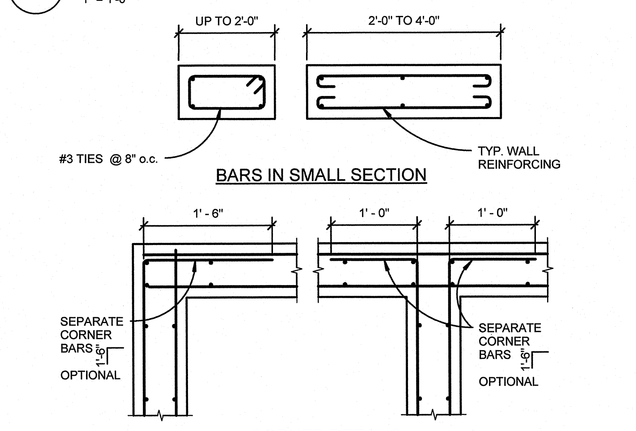

NOTE:
ABOVE DETAILS APPLY IN BOTH HORIZONTAL AND VERTICAL DIRECTIONS.

2 WALL DETAILS - DOUBLE LAYER REINFORCING

1" = 1'-0"

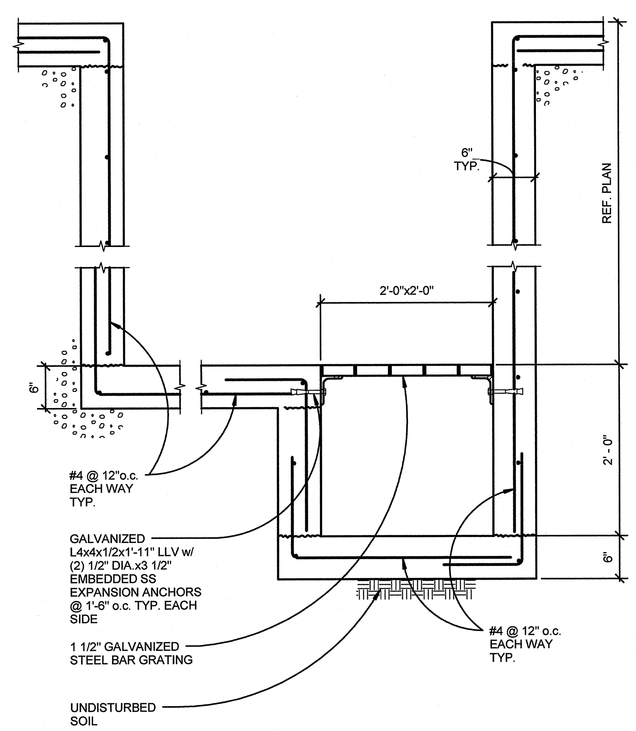

3 SECTION AT ELEVATOR PIT AND SUMP

1" = 1'-0"

Revisions	Date
1	

pka ARCHITECTS

PETERSEN KOLBERG & ASSOCIATES ARCHITECTS/PLANNERS
6969 SW Hampton Street
Portland, OR 97223
phone: 503-968-6800
fax: 503-968-6860
www.pkaarchitects.com

REGISTERED PROFESSIONAL ENGINEER — STRUCTURAL — OREGON — M. BRADLY MOYER — EXPIRES 12-31-16

DEPARTMENT OF VETERANS AFFAIRS
SOUTHERN OREGON REHABILITATION CENTER & CLINICS
8495 Crater Lake Highway, White City, Oregon 97503-3012

kpff
111 SW Fifth Ave., Suite 2500
Portland, OR 97204
O: 503.227.3251
F: 503.227.7980
www.kpff.com

Drawing Title: TYPICAL CONCRETE DETAILS

SPECIALTY CARE BUILDING - 201B

Approved: Proj Eng	Approved: Infect Cont	Approved: Chief P&O	Approved: Chief M&R	Approved: Safety Mgr.

Approved: Service Chief	Approved: Chief Facilities Mgmt	Approved: VAMC Director

Building No.	Chkd By/Proj. Mgr	Drawn By
Building 201B	NR	CB

Location

Date: 11/27/15
Project No.: 131207
Drawing No.: S5.02
Dwg. of

US DEPARTMENT OF VETERANS AFFAIRS

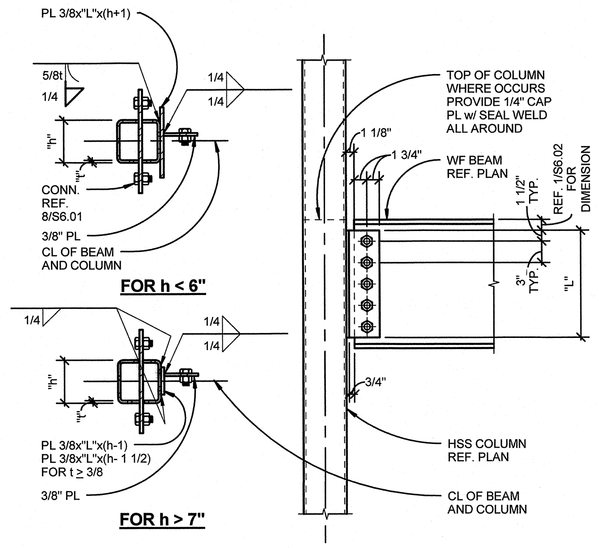

NOTES:

1. USE THIS DETAIL FOR SMALLER BEAM SIZES AT MULTIPLE SIDED CONNECTIONS ONLY.
2. REF. 3/S6.02 AND 4/S6.02 FOR WELDS AT SKEWED CONNECTION.
3. REF. SCHEDULE 2/S6.02 FOR PLATE LENGTH ("L") AND BOLTS.

TYPICAL BOLTED BEAM TO HSS COLUMN AT MULTIPLE SIDED CONNECTIONS - DESIGNATED X

10 — 1" = 1'-0"

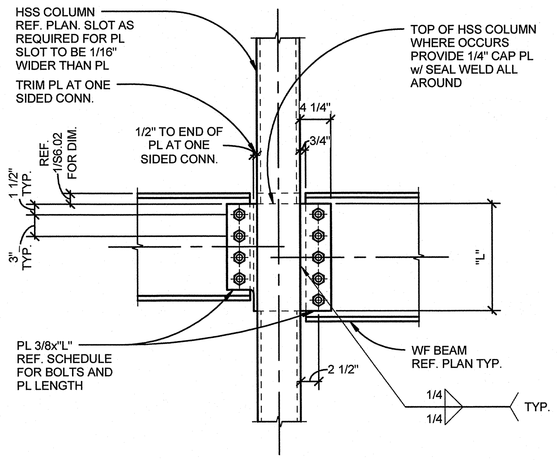

BEAM TO HSS COLUMN DESIGNATED X

REF. SCHEDULE 2/S6.02

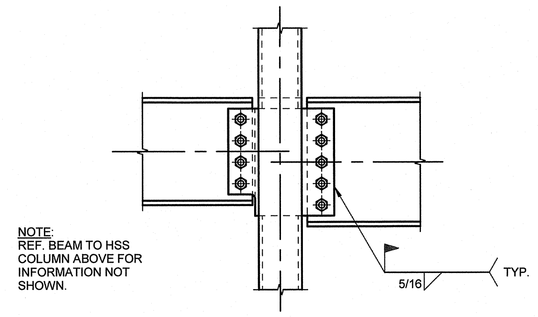

WELDED BEAM TO HSS COLUMN SHEAR PL - DESIGNATED XW

REF. SCHEDULE 2/S6.02

TYPICAL BOLTED WF BEAM TO HSS COLUMN

8 — 1" = 1'-0"

TYP. GRAVITY COLUMN BASE PLATE SCHEDULE						
COLUMN SIZE	N (IN.)	B (IN.)	T (IN.)	X (IN.)	L (IN.)	ANCHOR RODS (NO.) DIAMETER
W10	16	16	1.0	1.0	12	(4) 3/4"Ø

NOTES:

1. ANCHOR RODS SHALL BE HEADED ASTM F1554 GRADE 36 U.N.O.
2. ANCHOR ROD HOLE DIAMETERS (dh) SHALL BE AS FOLLOWS:
   $d_b \le 1"$: $dh = d_b + 5/16"$
   $1" < d_b \le 2"$: $dh = d_b + 1/2"$
   $d_b > 2"$: $dh = d_b + 1"$
3. PROVIDE MILL FINISH AT BOTTOM OF COLUMN AND TOP OF BASE PL.
4. ACCEPTABLE TO SLOT HOLES RADIALLY TO ALLOW FOR CONSTRUCTION TOLERANCE.
5. BASE PLATE TO BE GRADE 50.

TYPICAL GRAVITY COLUMN BASE PLATE SCHEDULE

3 — 1" = 1'-0"

TYP. GRAVITY COLUMN w/ UPLIFT BASE PLATE SCHEDULE							
COLUMN SIZE	N (IN.)	B (IN.)	T (IN.)	X (IN.)	L (IN.)	ANCHOR RODS (NO.) DIAMETER	PLATE WASHER
HSS6x6	12	12	5/8	3/4	12	(4) 5/8"Ø	PL 1/4x3x3

NOTES:

1. USE THIS DETAIL ONLY AT COLUMNS INDICATED TO HAVE UPLIFT ON PLAN. USE DETAIL 1/S6.01 AT ALL OTHER COLUMNS.
2. ANCHOR BOLTS SHALL BE HEADED ASTM A307 BOLTS U.N.O.
3. ANCHOR BOLT HOLE DIAMETERS (dh) SHALL BE AS FOLLOWS:
   $d_b \le 1"$: $dh = d_b + 5/16"$
   $1" < d_b \le 2"$: $dh = d_b + 1/2"$
   $d_b \le 2"$: $dh = d_b + 1"$
4. PROVIDE MILL FINISH AT BOTTOM OF COLUMN AND TOP OF BASE PLATE.

TYPICAL GRAVITY COLUMN w/ UPLIFT BASE PLATE SCHEDULE

6 — 1" = 1'-0"

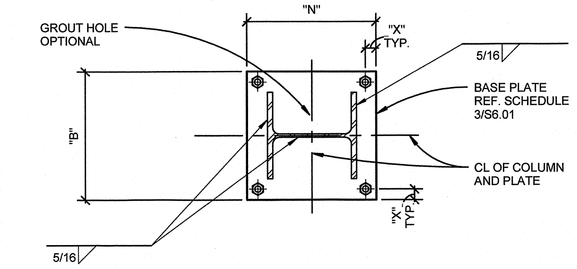

SECTION A-A

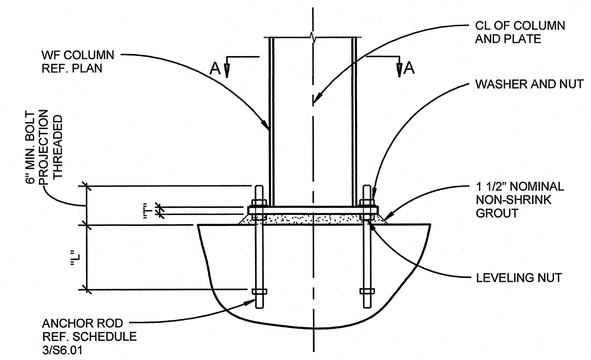

TYPICAL GRAVITY COLUMN BASE PLATE DETAIL

1 — 1" = 1'-0"

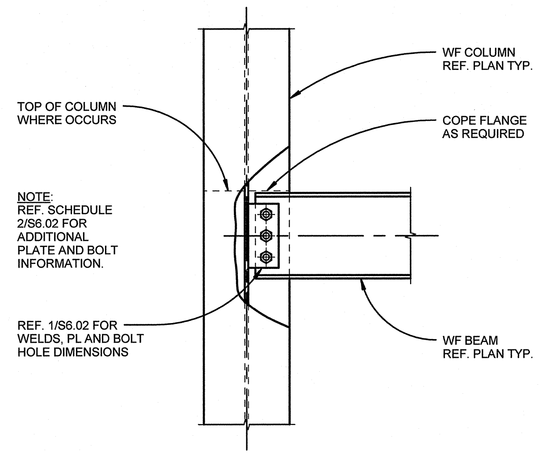

WF BEAM TO WF COLUMN WEB CONNECTION DETAIL

11 — 1" = 1'-0"

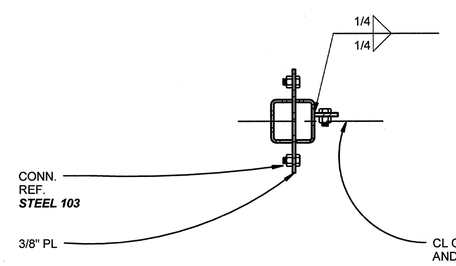

SECTION A-A

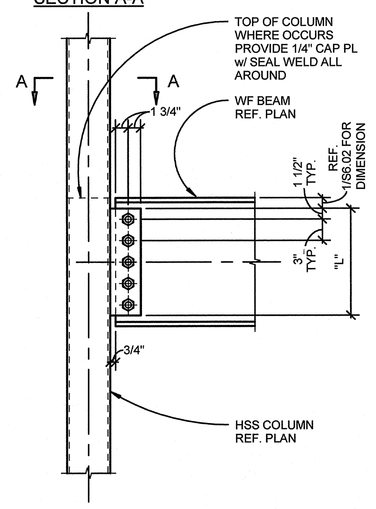

NOTES:

1. USE THIS DETAIL FOR SMALLER BEAM SIZES AT MULTIPLE SIDED CONNECTIONS ONLY.
2. REF. 3/S6.02 AND 4/S6.02 FOR WELDS AT SKEWED CONNECTION.
3. REF. SCHEDULE 2/S6.02 FOR PLATE LENGTH ("L") AND BOLTS.

TYPICAL BOLTED WF BEAM TO HSS COLUMN AT MULTIPLE SIDED CONNECTIONS - DESIGNATED X

9 — 1" = 1'-0"

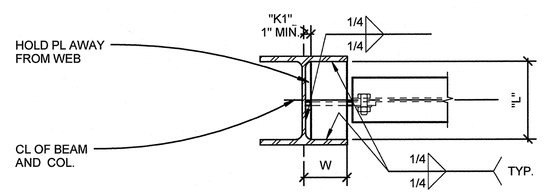

PLAN VIEW A-A

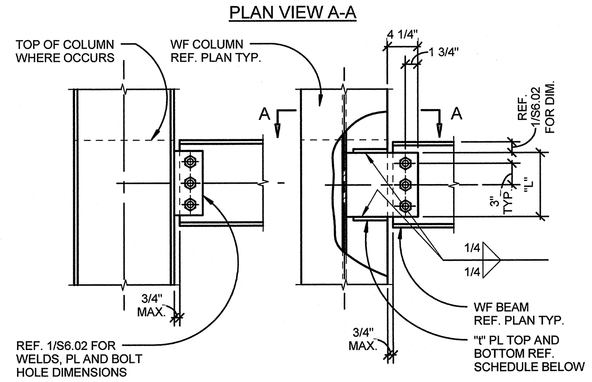

NOTE:
REF. 3/S6.02 AND 4/S6.02 FOR WELDS AT SKEWED CONNECTIONS.

L/W RATIO	"t" PL
< 3	1/2"
≥ 3	3/4"

BEAM TO COLUMN DESIGNATED X

REF. SCHEDULE 2/S6.02

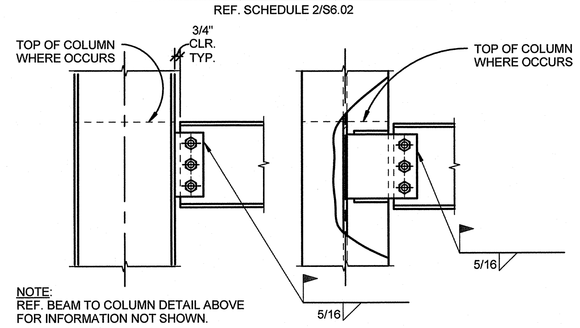

WELDED BEAM TO COLUMN SHEAR PL - DESIGNATED XW

REF. SCHEDULE 2/S6.02

TYPICAL BOLTED WF BEAM TO WF COLUMN DETAILS

7 — 1" = 1'-0"

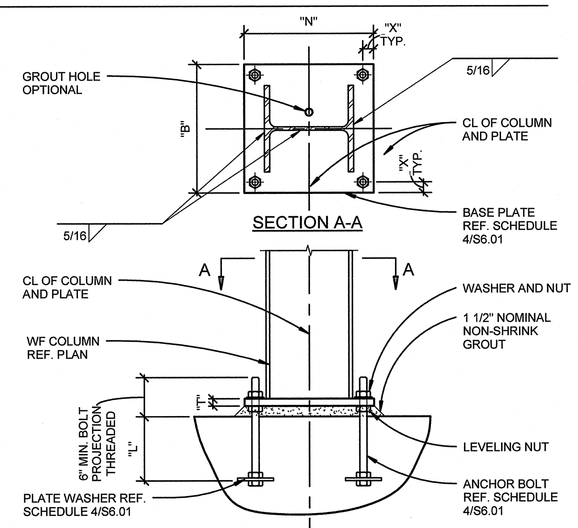

TYPICAL GRAVITY COLUMN w/ UPLIFT BASE PLATE DETAIL

4 — 1" = 1'-0"

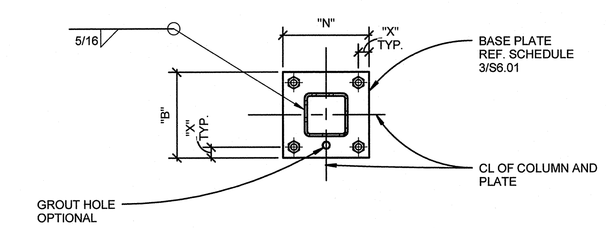

SECTION A-A

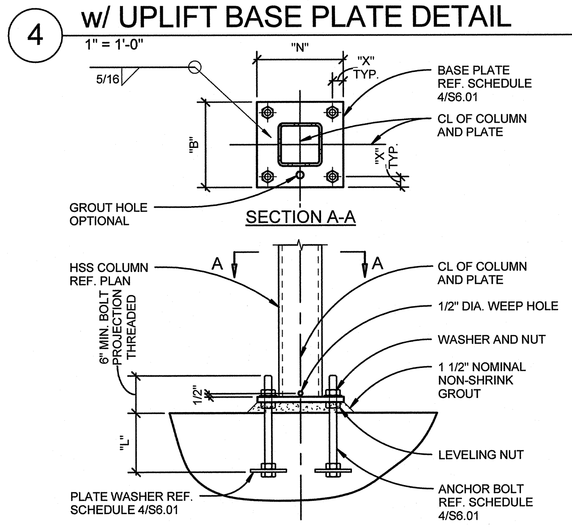

TYPICAL GRAVITY COLUMN w/ UPLIFT BASE PLATE DETAIL

5 — 1" = 1'-0"

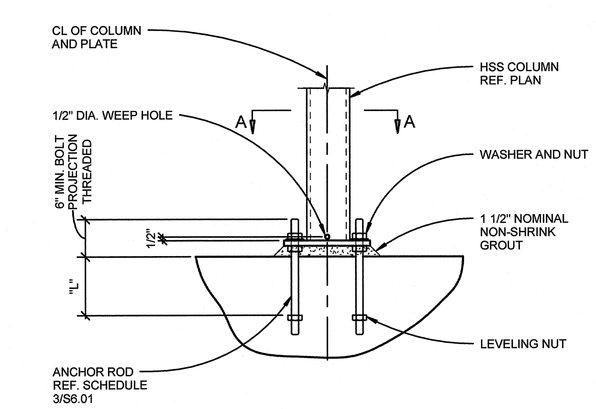

TYPICAL GRAVITY COLUMN BASE PLATE DETAIL

2 — 1" = 1'-0"

Revisions	Date

pka ARCHITECTS

PETERSEN KOLBERG & ASSOCIATES ARCHITECTS/PLANNERS
6969 SW Hampton Street
Portland, OR 97223
phone: 503-968-6800
fax: 503-968-6860
www.pkaarchitects.com

STRUCTURAL REGISTERED PROFESSIONAL ENGINEER 70542 OREGON JULY 31, 1986 M. BRADLY MOYES
EXPIRES 12-31-16

DEPARTMENT OF VETERANS AFFAIRS
SOUTHERN OREGON REHABILITATION CENTER & CLINICS
8495 Crater Lake Highway, White City, Oregon 97503-3012

kpff
111 SW Fifth Ave., Suite 2500
Portland, OR 97204
O: 503.227.3251
F: 503.227.7980
www.kpff.com

Drawing Title: TYPICAL STEEL DETAILS

SPECIALTY CARE BUILDING - 201B

Approved: Proj Eng | Approved: Infect Cont | Approved: Chief P&O | Approved: Chief M&R | Approved: Safety Mgr.

Approved: Service Chief | Approved: Chief Facilities Mgmt | Approved: VAMC Director

Building No.	Chkd By/Proj. Mgr	Drawn By
Building 201B	NR	CB

Location

Date	Project No.	Drawing No.
11/27/15	131207	S6.01

Dwg. of

US DEPARTMENT OF VETERANS AFFAIRS

TYP. BEAM TO BEAM MOMENT CONNECTION SCHEDULE

BEAM SIZE	BOLTED CONNECTION TYPE	TOP PLATE THICKNESS x WIDTH	BOTTOM PLATE THICKNESS x WIDTH	WELD t1		WELD t2
				THICKNESS	LENGTH "L"	
W12	2F	3x3/8	5x1/4	1/4	5	1/4
W16	3F	4 1/2x1/2	6 1/2x3/8	1/4	8	5/16

NOTE:
PLATES TO BE GR. 50 KSI PL

8 TYP. BEAM TO BEAM MOMENT CONNECTION SCHEDULE
1" = 1'-0"

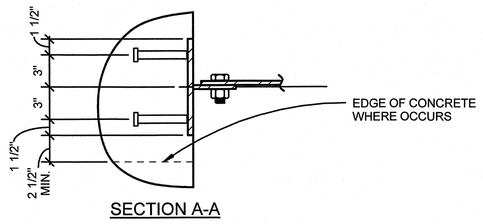

SECTION A-A

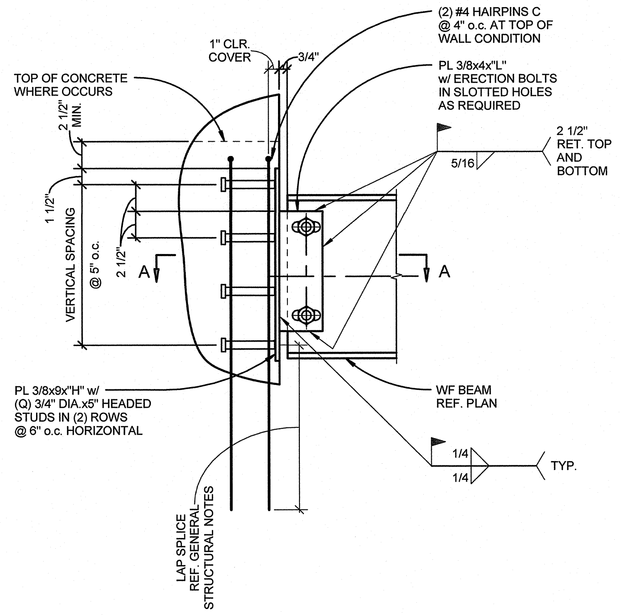

5 TYPICAL SINGLE SHEAR PLATE CONNECTION AT CONCRETE WALL
1 1/2" = 1'-0"

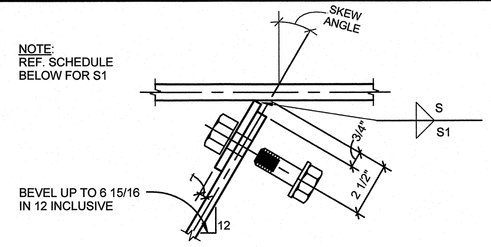

TYP. SKEWED CONNECTION
TYPE WP1

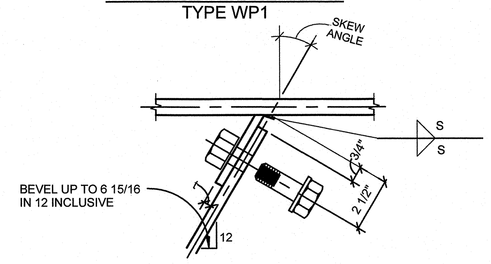

ALTERNATE SKEWED CONNECTION
TYPE WP2

VALUES OF S1 FOR TYPE WP1 SKEWED CONNECTION

BEVEL	PL THICKNESS t (IN.)						
	1/4	5/16	3/8	7/16	1/2	5/8	3/4
UP TO 1 3/8	S	S	S+1/16	S+1/16	S+1/16	S+1/8	S+1/8
OVER 1 5/8 TO 2 1/8	S	S+1/16	S+1/16	S+1/16	S+1/8	S+1/8	S+1/8
OVER 2 1/8 TO 3 1/4	S+1/16	S+1/8	S+1/8	S+1/8	S+1/8	-	-
OVER 3 1/4 TO 4 3/8	S+1/8	S+1/8	S+1/8	-	-	-	-
OVER 4 3/8 TO 5 5/8	S+1/8	S+1/8	-	-	-	-	-
OVER 5 5/8 TO 6 15/16	S+1/8	-	-	-	-	-	-

NOTES:

1. S INDICATES WELD SIZE SHOWN ON TYPICAL DETAIL.
2. USE STANDARD HEX HEAD BOLTS WHERE FIT-UP DOES NOT ALLOW USE OF TENSION CONTROL BOLTS.

3 TYPICAL SKEWED SHEAR PLATE WELDS - SKEW < 30 DEGREES
3" = 1'-0"

K	"X"
K<1 1/2"	1 1/2"
1 1/2"<K<2"	2"
2"<K<3"	3"
K>3"	K

NOTE:
K REPRESENTS THE LARGER K DIMENSION OF THE TWO CONNECTION BEAMS

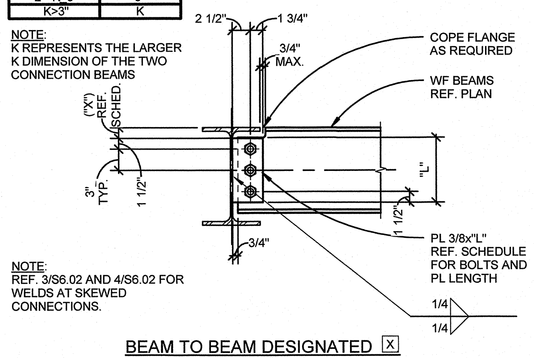

NOTE:
REF. 3/S6.02 AND 4/S6.02 FOR WELDS AT SKEWED CONNECTIONS.

BEAM TO BEAM DESIGNATED X
REF. SCHEDULE 2/S6.02

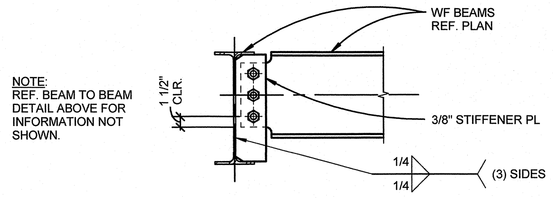

NOTE:
REF. BEAM TO BEAM DETAIL ABOVE FOR INFORMATION NOT SHOWN.

FULL DEPTH SHEAR PL DESIGNATED XS
REF. SCHEDULE 2/S6.02

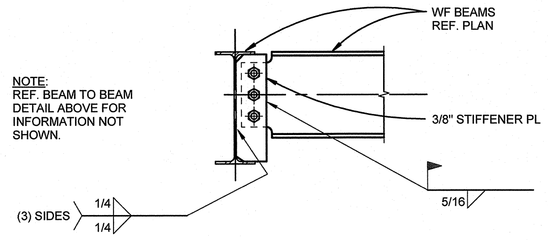

NOTE:
REF. BEAM TO BEAM DETAIL ABOVE FOR INFORMATION NOT SHOWN.

FULL DEPTH WELDED SHEAR PL DESIGNATED XW
REF. SCHEDULE 2/S6.02

1 TYPICAL BOLTED BEAM TO BEAM CONNECTION
1" = 1'-0"

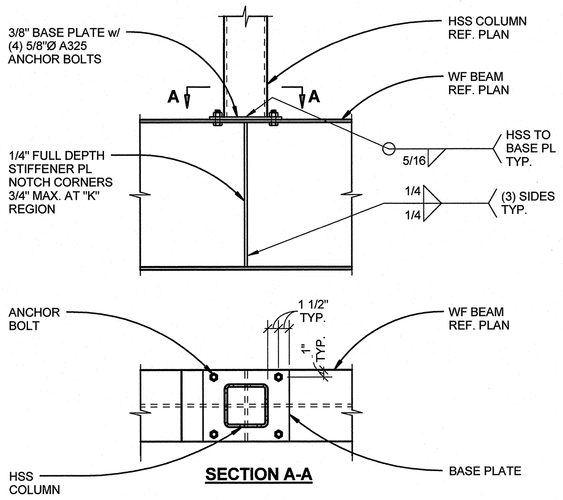

SECTION A-A

9 HSS POST AT TRANSFER GIRDER
1" = 1'-0"

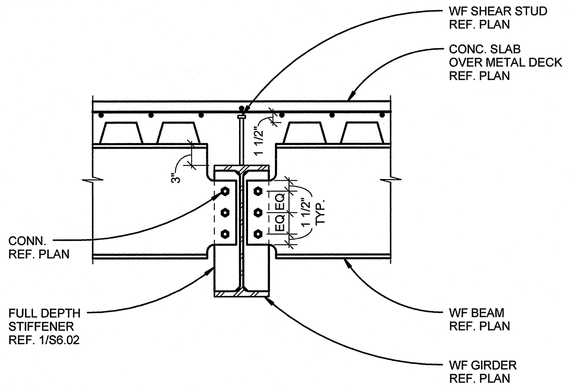

10 BEAM TO GIRDER CONNECTION AT DEPRESSED GIRDER
1" = 1'-0" S1.02

TYP. SINGLE SHEAR PLATE AT CONCRETE WALL SCHEDULE

CONNECTION TYPE	LENGTH "L"	EMBEDMENT LENGTH "H"	NO. OF STUDS "Q"
2C	6"	11"	4
3C	9"	14"	6
4C	12"	16"	8
5C	15"	23"	10
6C	18"	28"	12
7C	21"	33"	14
8C	24"	38"	16
9C	27"	43"	18
10C	30"	48"	20

6 TYPICAL SINGLE SHEAR PLATE AT CONRETE WALL SCHEDULE
1" = 1'-0"

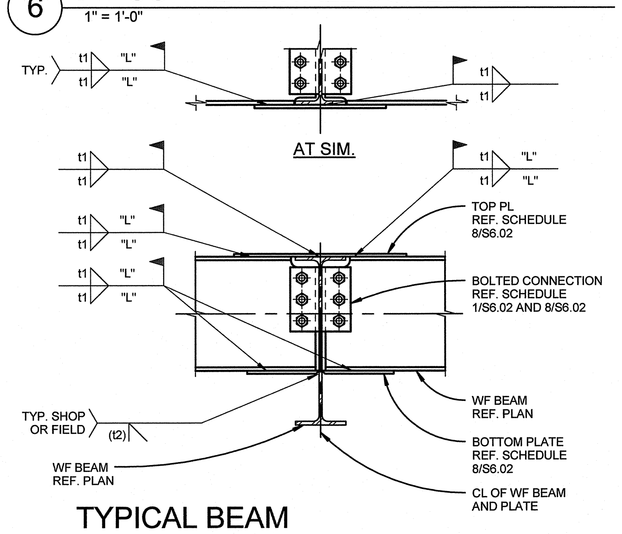

7 TYPICAL BEAM TO BEAM MOMENT CONNECTION
1" = 1'-0"

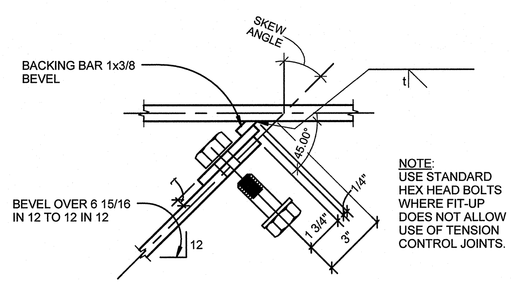

NOTE:
USE STANDARD HEX HEAD BOLTS WHERE FIT-UP DOES NOT ALLOW USE OF TENSION CONTROL JOINTS.

SKEWED CONN.
TYPE WP3

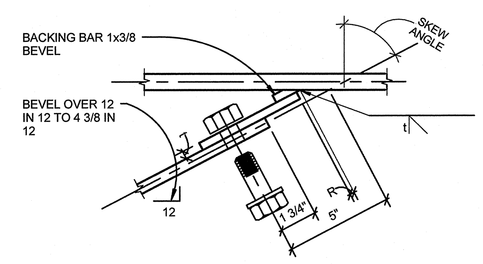

R = 1/8 FOR BEVELS 4 3/8 IN 12 TO 6 15/16 IN 12 INCLUSIVE
R = 3/16 FOR BEVELS OVER 6 15/16 IN 12 TO 12 IN 12 INCLUSIVE

SKEWED CONN.
TYPE WP4

4 TYPICAL SKEWED SHEAR PLATE WELDS - SKEW > 30 DEGREES
3" = 1'-0"

SINGLE ROW BEARING BOLTED BEAM CONNECTION SCHEDULE

CONNECTION TYPE	NO. OF 7/8" DIA. A325 BOLTS	PLATE LENGTH "L"	HOLE SIZE
2	2	6"	STANDARD HOLE
3	3	9"	STANDARD HOLE
4	4	12"	STANDARD HOLE
5	5	15"	STANDARD HOLE
6	6	18"	STANDARD HOLE
7	7	21"	STANDARD HOLE
8	8	24"	HORIZONTAL SHORT SLOTTED HOLE IN PL
9	9	27"	HORIZONTAL SHORT SLOTTED HOLE IN PL
10	10	30"	HORIZONTAL SHORT SLOTTED HOLE IN PL

NOTES:

1. X INDICATES BEARING TYPE CONNECTION WITH THREADS INCLUDED IN SHEAR PLANE (A325N).
2. XF INDICATES SLIP CRITICAL CONNECTION (A325 SC).
3. XX INDICATES BEARING TYPE CONNECTION WITH THREADS EXCLUDED IN SHEAR PLANE (A325 X).

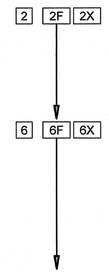

2 SINGLE ROW BEARING BOLTED BEAM CONNECTION SCHEDULE
1" = 1'-0"

Revisions	Date

pka ARCHITECTS

PETERSEN KOLBERG & ASSOCIATES
ARCHITECTS/PLANNERS
6969 SW Hampton Street
Portland, OR 97223
phone: 503-968-6800
fax: 503-968-6860
www.pkaarchitects.com

REGISTERED PROFESSIONAL ENGINEER 70542PE OREGON JULY 17, 1987 M. BRADLY MOYER
EXPIRES 12-31-16

DEPARTMENT OF VETERANS AFFAIRS
SOUTHERN OREGON REHABILITATION CENTER & CLINICS
8495 Crater Lake Highway, White City, Oregon 97503-3012

kpff
111 SW Fifth Ave., Suite 2500
Portland, OR 97204
O: 503.227.3251
F: 503.227.7980
www.kpff.com

Drawing Title: TYPICAL STEEL DETAILS

Approved: Proj Eng | Approved: Infect Cont | Approved: Chief P&O | Approved: Chief M&R | Approved: Safety Mgr.
Approved: Service Chief | Approved: Chief Facilities Mgmt | Approved: VAMC Director

SPECIALTY CARE BUILDING - 201B

Building No.: Building 201B | Chkd By/Proj. Mgr: NR | Drawn By: CB | Location

Date: 11/27/15
Project No.: 131207
Drawing No.: S6.02
Dwg. of

U.S. DEPARTMENT OF VETERANS AFFAIRS

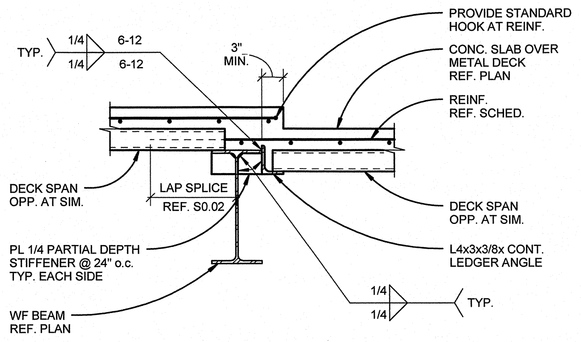

15 TYPICAL SLAB DEPRESSION CONNECTION DETAIL

1" = 1'-0" S1.02

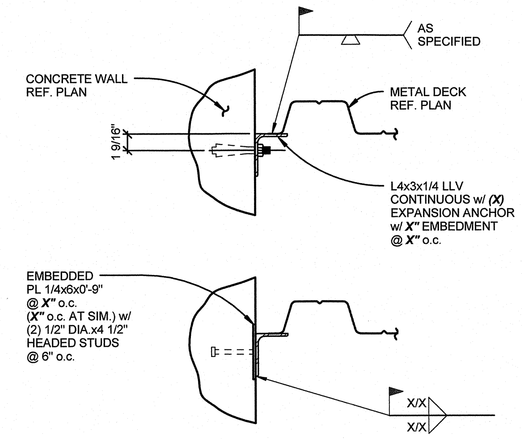

11 DECKING LEDGER SUPPORT ANGLE

1 1/2" = 1'-0"

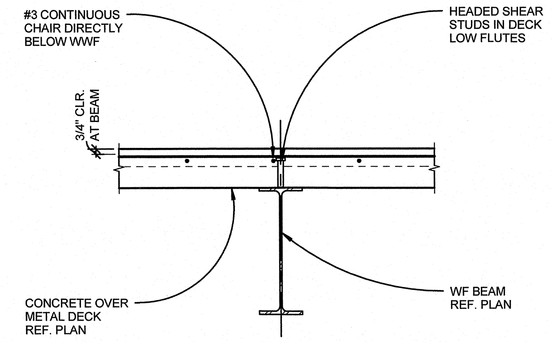

7 DECK PERPENDICULAR TO BEAM

1" = 1'-0"

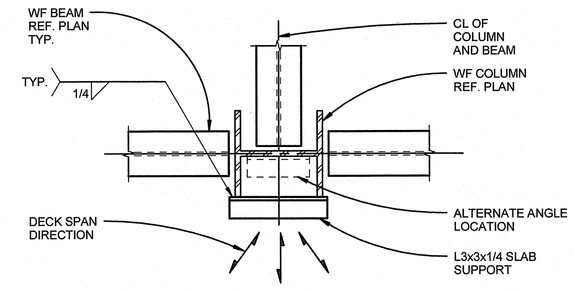

NOTES:

1. SLAB SUPPORT ANGLES ARE REQUIRED AT ALL COLUMN LOCATIONS WHERE THERE IS NO BEAM OR OTHER SUPPORT FOR SLAB AT COLUMN PENETRATION.
2. IN ADDITION TO PERMANENT SLAB SUPPORT ANGLES, THE CONTRACTOR SHALL PROVIDE MISCELLANEOUS DECK SUPPORTS AT OTHER LOCATIONS REQUIRED TO MAINTAIN DECK LEVEL UNTIL CONCRETE CURES.
3. OTHER CONFIGURATIONS REQUIRING SLAB SUPPORT ANGLES INCLUDE, BUT ARE NOT LIMITED TO, THE FOLLOWING:

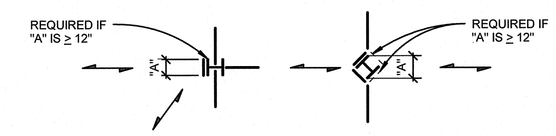

4 SLAB SUPPORT AT INTERIOR COLUMN

1" = 1'-0"

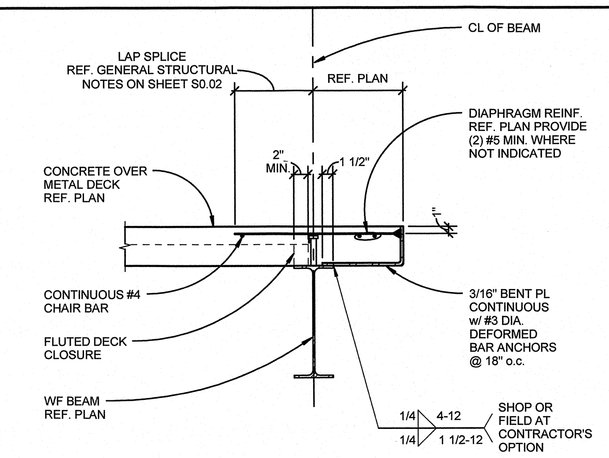

1 TYPICAL EDGE OF DECK DETAIL - DECK PERPENDICULAR

1" = 1'-0" S1.01

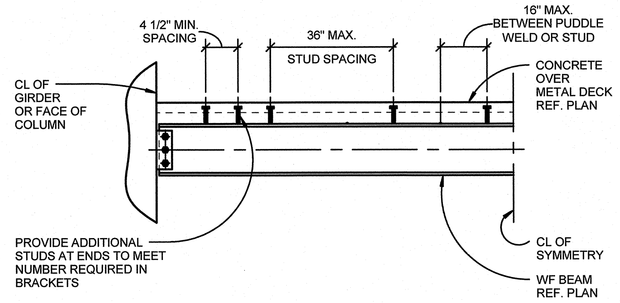

12 TYPICAL COMPOSITE BEAM STUD SPACING - DECK PARALLEL

1" = 1'-0"

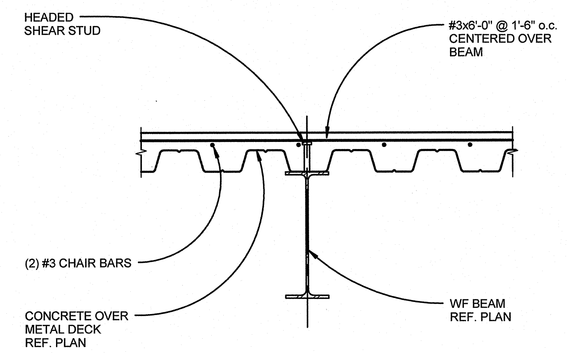

8 DECK VALLEY CENTERED DECK PARALLEL TO BEAM

1" = 1'-0"

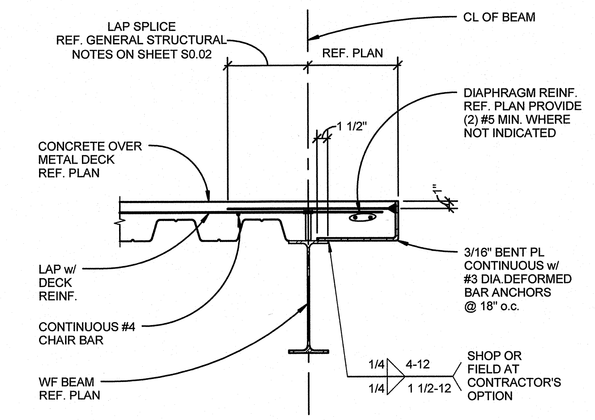

2 TYPICAL EDGE OF DECK DETAIL - DECK PARALLEL

1" = 1'-0" S1.02

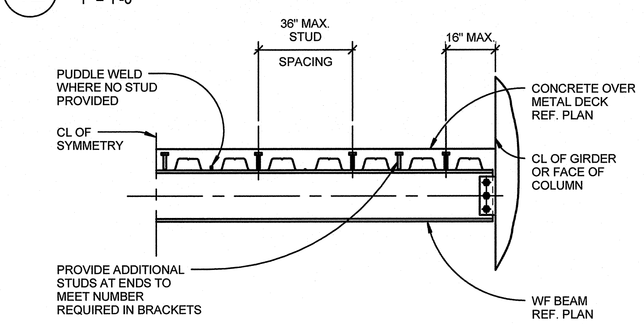

NOTES:

1. THE MINIMUM NUMBER OF STUDS REQUIRED IS SHOWN AS [X] ON THE FRAMING PLANS. [X-Y-Z] INDICATES NUMBER OF STUDS ON A GIRDER BETWEEN BEAM CONNECTION POINTS. NO STUDS ARE REQUIRED WHERE NO DESIGNATION IS GIVEN. ADDITIONAL STUDS MAY BE REQUIRED TO MEET THE ABOVE MAXIMUM SPACING REQUIREMENTS.
2. IF MULTIPLE STUDS ARE REQUIRED IN ONE FLUTE, THE TRANSVERSE SPACING SHALL BE 3" MINIMUM.

13 TYPICAL COMPOSITE BEAM STUD SPACING - DECK PERPENDICULAR

1" = 1'-0"

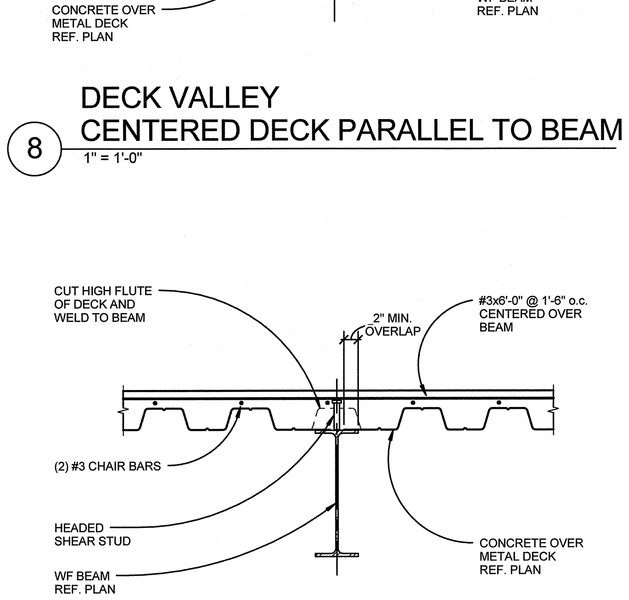

9 DECK VALLEY OFF-CENTER DECK PARALLEL TO BEAM

1" = 1'-0"

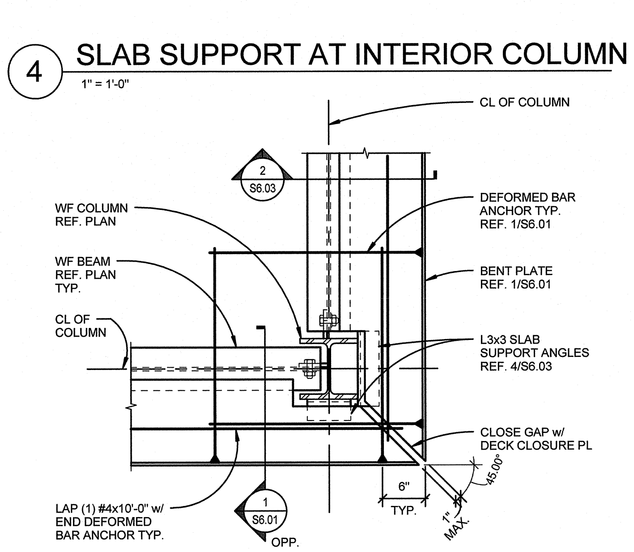

5 DECK EDGE AT CORNER COLUMN

1" = 1'-0" S1.02

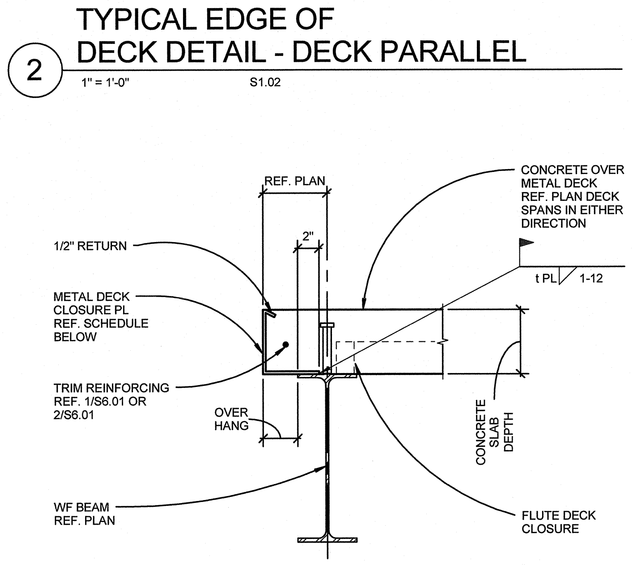

EDGE FORM GAUGE									
SLAB DEPTH (IN.)	OVERHANG (IN.)								
	2	3	4	5	6	7	8	9	10
4	18	18	16	14	12	12	12	10	10
4 1/2	18	18	16	14	12	12	12	10	10
5	18	18	16	14	12	12	12	10	10
5 1/2	18	16	16	14	12	12	10	10	10
6	18	16	14	14	12	12	10	10	-
6 1/2	18	16	14	12	12	12	10	10	-
7	18	16	14	12	12	12	10	10	-
7 1/2	18	14	14	12	12	10	10	-	-

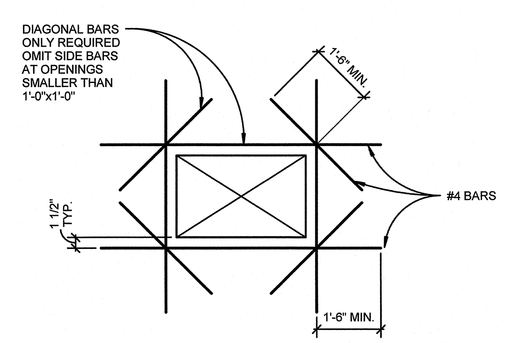

NOTE:
ALL OPENINGS NOT SHOWN ON THE STRUCTURAL DRAWINGS THAT ARE LARGER THAN 1'-0" SQUARE AND ALL MULTIPLE HOLES SPACED CLOSER THAN 3x LARGEST OPENING DIMENSION, SHALL BE SUBMITTED FOR REVIEW TO THE STRUCTURAL ENGINEER.

14 SLAB ON METAL DECK OPENING

1" = 1'-0"

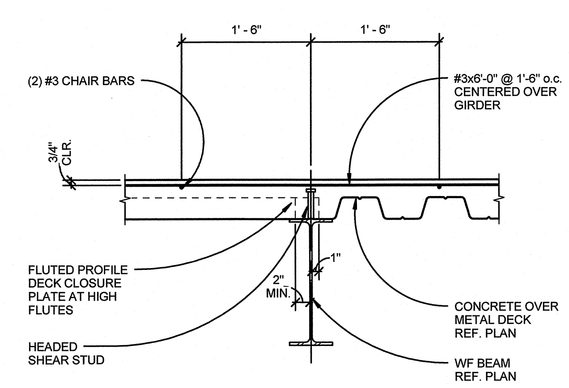

10 DETAIL AT DECK DISCONTINUITY

1" = 1'-0"

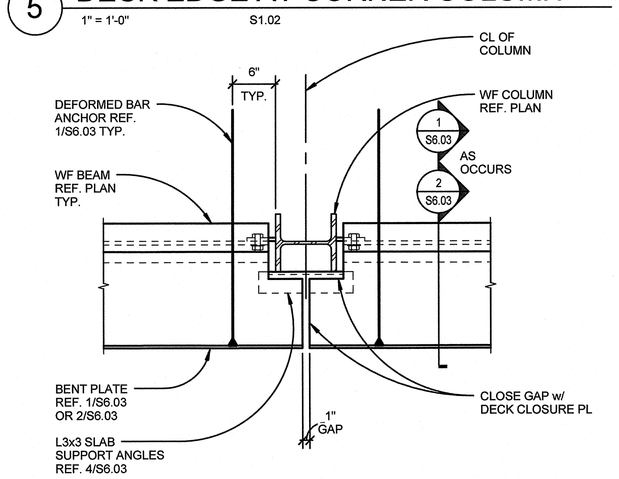

6 DECK EDGE DETAIL AT COLUMN

1" = 1'-0" S1.02

3 TYPICAL CONCRETE OVER METAL DECK EDGE DETAIL

1 1/2" = 1'-0"

Revisions	Date

pka ARCHITECTS

PETERSEN KOLBERG & ASSOCIATES ARCHITECTS/PLANNERS
6969 SW Hampton Street
Portland, OR 97223
phone: 503-968-6800
fax: 503-968-6860
www.pkaarchitects.com

STRUCTURAL REGISTERED PROFESSIONAL ENGINEER M. BRADLY MOYES OREGON EXPIRES 12-31-16

DEPARTMENT OF VETERANS AFFAIRS
SOUTHERN OREGON REHABILITATION CENTER & CLINICS
8495 Crater Lake Highway, White City, Oregon 97503-3012

kpff
111 SW Fifth Ave., Suite 2500
Portland, OR 97204
O: 503.227.3251
F: 503.227.7980
www.kpff.com

Drawing Title: TYPICAL STEEL DETAILS

SPECIALTY CARE BUILDING - 201B

Date: 11/27/15
Project No. 131207

Approved: Proj Eng | Approved: Infect Cont | Approved: Chief P&O | Approved: Chief M&R | Approved: Safety Mgr.
Approved: Service Chief | Approved: Chief Facilities Mgmt | Approved: VAMC Director

Building No. Building 201B | Chkd By/Proj. Mgr NR | Drawn By CB | Location

Drawing No. S6.03
Dwg. of

© PKA ARCHITECTS, INC. 2015

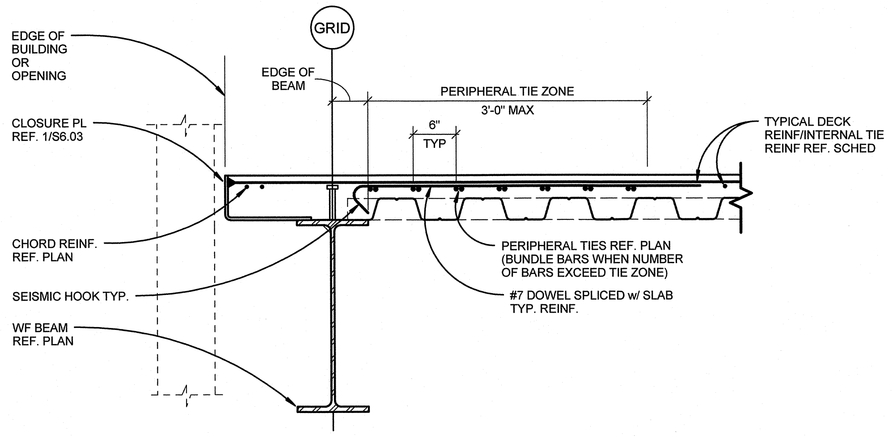

NOTE:
REF. 1/S6.03 FOR INFORMATION NOT SHOWN.

A DECK PARALLEL OR PERPENDICULAR TO EDGE BEAM TOP REINF LAYER PERPENDICULAR TO EDGE BEAM

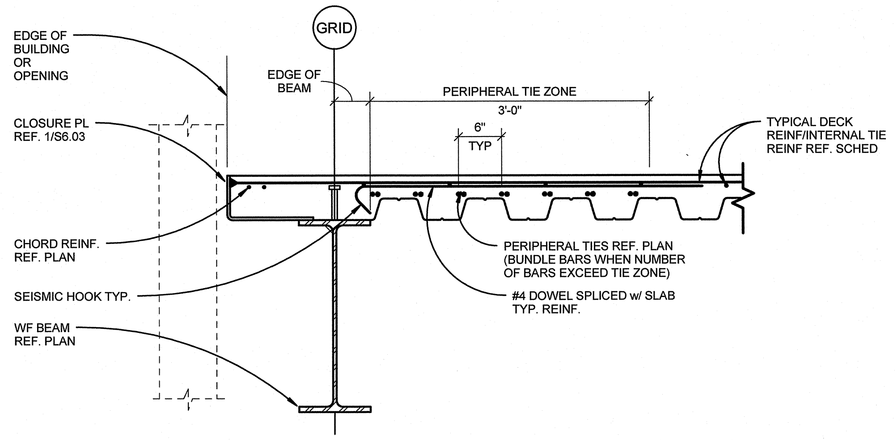

NOTE:
REF. 1/S6.03 FOR INFORMATION NOT SHOWN.

B DECK PARALLEL OR PERPENDICULAR TO EDGE BEAM TOP REINF LAYER PARALLEL TO EDGE BEAM

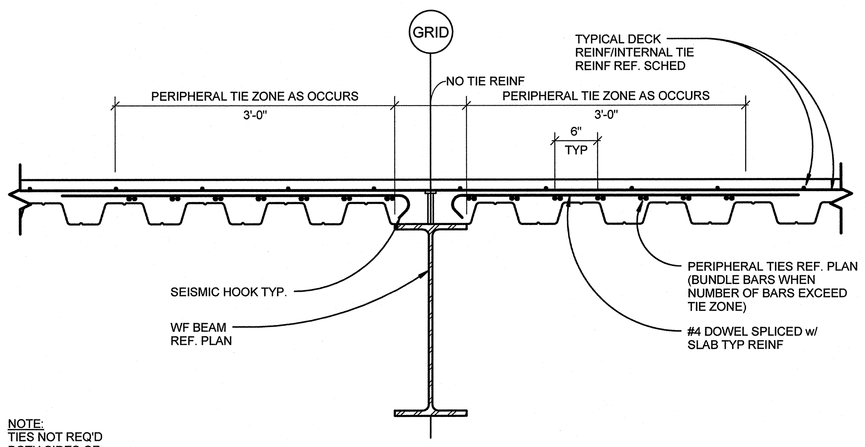

NOTE:
TIES NOT REQ'D BOTH SIDES OF GIRDER.

C DECK PARALLEL OR PERPENDICULAR TO BEAM

8 PERIPHERAL AND INTERNAL TIE REINFORCING LAYOUT

1" = 1'-0" S6.04

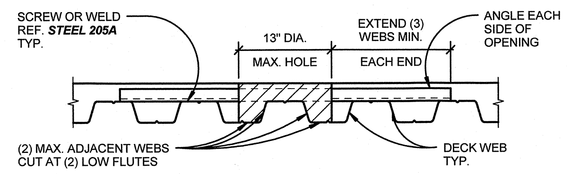

REINFORCING AT HOLES GREATER THAN 6" TO 13" MAX.
LOCATED w/ IMPACTS TO (2) ADJACENT LOW FLUTES

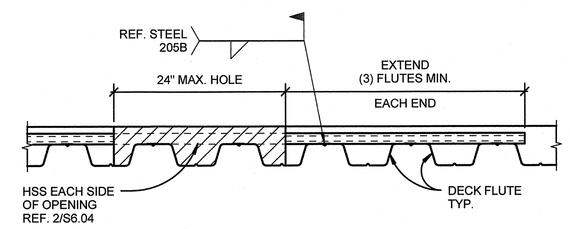

REINFORCING AT HOLES 13" TO 24" MAX.

NOTE:
REF. 1/S6.04 AND 2/S6.04 FOR CRITERIA ON DECK CUTTING PRIOR TO POUR OR AFTER CONCRETE CURING.

5 DECK REINFORCING AT HOLES

1" = 1'-0"

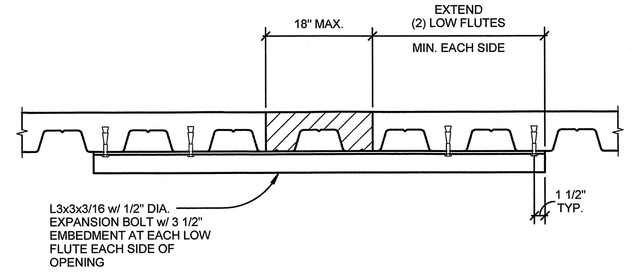

REINFORCING AT CORES TO 18" MAX.

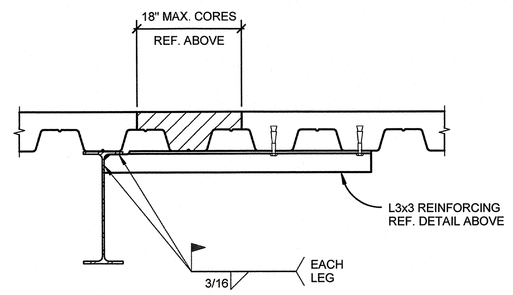

ANGLE REINFORCING AT WF CONFLICT

NOTES:

1. REF. 1/S6.04 FOR DIMENSION REQUIREMENTS WHERE ADJACENT HOLES MUST BE CONSIDERED AS ONE OPENING.
2. REF. 4/S6.04 FOR CORES TO 13" MAX. CENTERED ON DECK LOW FLUTE AND 6" DIA. MAX. CORES LOCATED AT RANDOM.

3 DECK REINFORCING AT HOLES

1" = 1'-0"

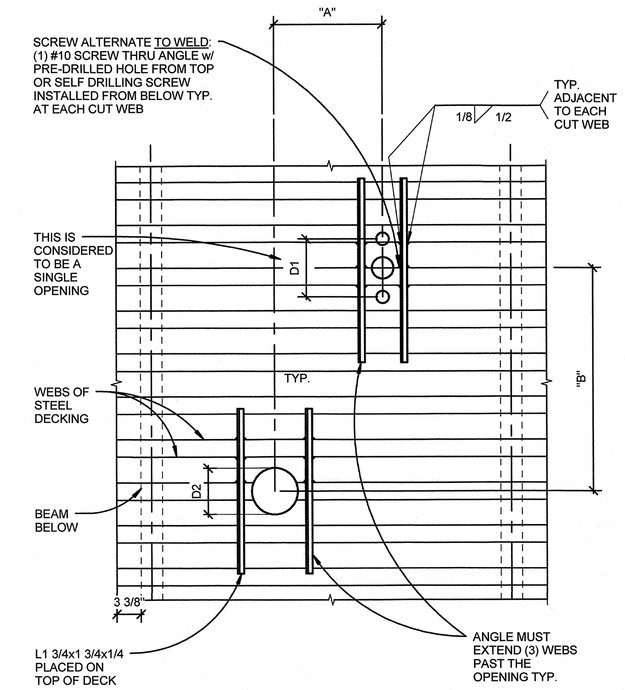

NOTES:

1. HOLES 6" DIA. AND LESS LOCATED AT RANDOM OR 13" DIA. AND LESS CENTERED ON DECK LOW FLUTES DO NOT REQUIRE REINFORCING. REF. 4/S6.04.
2. PRIOR TO CONCRETE POUR, OPENINGS SHALL BE BLOCKED OUT w/ DECK LEFT INTACT. AFTER CONCRETE HAS CURED THE BLOCK OUT MAY BE REMOVED AND THE DECK CUT OUT TO THE EDGE OF THE CONCRETE POUR.
3. THE CONTRACTOR SHALL REINFORCE OR SHORE THE DECK AS REQUIRED TO SUPPORT LOADS DURING CONCRETE PLACEMENT.
4. IF DIMENSION "A" IS GREATER THAN 4D1, 4D2 OR 32" WHICHEVER IS LARGER THEN THERE IS NO RESTRICTION ON DIMENSION "B".
5. IF DIMENSION "B" IS GREATER THAN 4D1, 4D2 OR 32" WHICHEVER IS LARGER THEN THERE IS NO RESTRICTION ON DIMENSION "A".
6. IF DIMENSION "A" AND "B" ARE LESS THAN 4D1, 4D2 OR 32" WHICHEVER IS LARGER, THE OPENING GROUP WILL BE CONSIDERED AS A SINGLE HOLE, AND MUST BE REINFORCED AS REQUIRED FOR THE LARGER OPENING.

1 COMPOSITE DECK REINFORCING AT PENETRATIONS < 13" DIA OR LESS

1" = 1'-0"

DECK DESIGNATION	DECK TYPE	TOPPING THICKNESS	CONCRETE STRENGTH	REINFORCING (INCLUDING INTERNAL TIE REINF. FOR PROGRESSIVE COLLAPSE RESISTANCE)
D-1	3"x20 GA. TYPE W	3"	4000 PSI	#4 @ 9" o.c. EACH WAY
D-2	3"x20 GA. TYPE W	3"	4000 PSI	#4 @ 12" o.c. EACH WAY
D-3	3"x20 GA. TYPE W	3"	4000 PSI	#3 @ 18" o.c. EACH WAY
D-4	3"x18 GA. TYPE N	N/A	N/A	N/A

FLOOR AND ROOF DECK SCHEDULE

NOTES:

1. REF. GENERAL STRUCTURAL NOTES ON S0.02 FOR FLOOR AND ROOF DECK ATTACHMENTS.
2. REF. PLAN FOR ADDITIONAL REINFORCING.

6 FLOOR AND ROOF DECK SCHEDULE

1" = 1'-0"

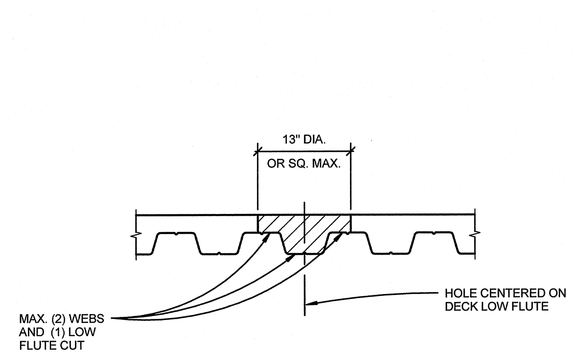

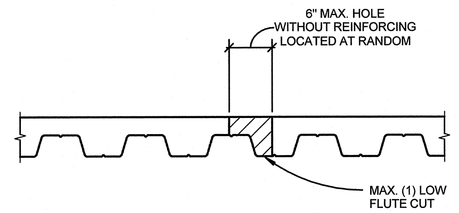

NOTES:

1. REF. 1/S6.04 AND 2/S6.04 FOR OPENINGS THAT DO NOT MEET THE REQUIREMENTS OF THIS DETAIL. REINFORCE ALL OPENINGS THAT IMPACT (2) ADJACENT LOW FLUTES.
2. REF. 1/S6.04 FOR DIMENSION REQUIREMENTS WHERE ADJACENT HOLES MUST BE CONSIDERED AS ONE OPENING.
3. OPENINGS THAT MEET THE REQUIREMENTS OF THIS DETAIL MAY BE FORMED PRIOR TO CONCRETE POUR OR CORE DRILLED AFTER PLACEMENT.

4 DECK REINFORCING AT HOLES

1" = 1'-0"

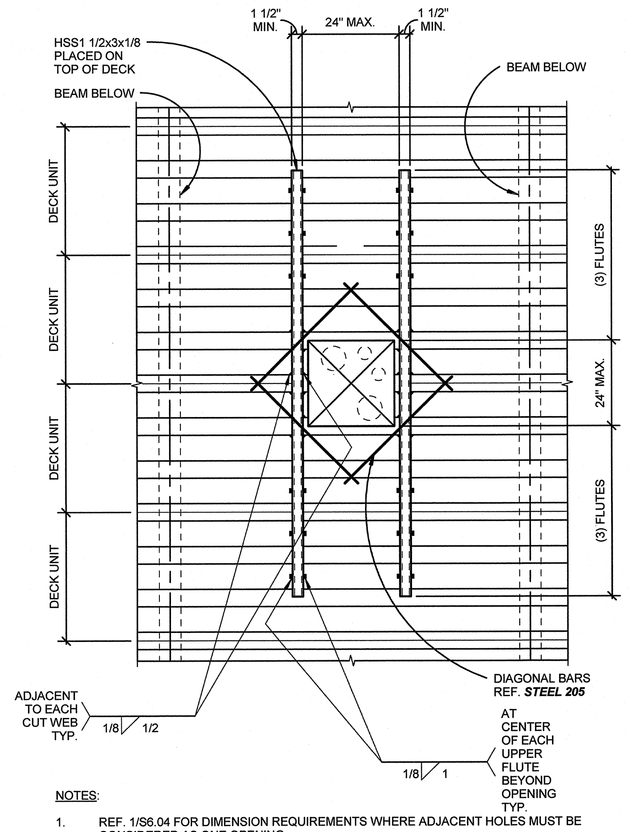

NOTES:

1. REF. 1/S6.04 FOR DIMENSION REQUIREMENTS WHERE ADJACENT HOLES MUST BE CONSIDERED AS ONE OPENING.
2. IF THE OPENING OR GROUP OF OPENINGS OCCURS IN ONE DECKING UNIT, THE OPENING OR OPENING GROUP MAY BE CUT PRIOR TO POURING OF CONCRETE.
3. IF, AS SHOWN IN THE DETAIL ABOVE, THE OPENING OR OPENING GROUP CUTS THROUGH TWO DECK UNITS, THE DECKING SHALL NOT BE CUT UNTIL CONCRETE HAS BEEN PLACED AND CURED.
   a. AT THE TIME OF POURING, SUITABLE SLEEVES OR BULKHEADS SHALL BE PLACED AROUND THE OPENING.
4. WHEN THE MAXIMUM DIMENSION OF AN OPENING OR OPENING GROUP EXCEEDS 24", PLACE HEADER BEAMS AROUND OPENING, NOTIFY ENGINEER FOR DESIGN.

2 COMPOSITE DECK REINFORCING AT PENETRATIONS > 13" DIA

1" = 1'-0"

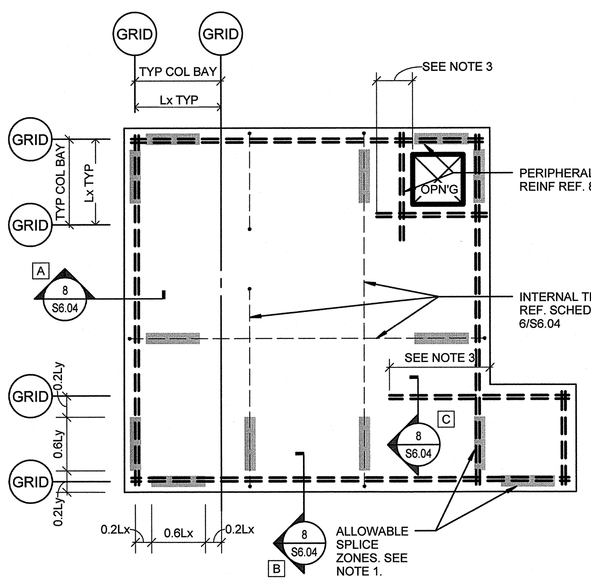

NOTES:

1. INDICATES ALLOWABLE SPLICE ZONE FOR TYPE 1 MECHANICAL SPLICES, WELDED SPLICES, AND LAP SPLICE PER S0.02. NO SPLICES PERMITTED OUTSIDE OF ALLOWABLE SPLICE ZONE, EXCEPT FOR TYPE 2 MECHANICAL COUPLERS WHICH MAY BE USED AT ANY LOCATION.
2. INDICATES 135 DEGREE SEISMIC HOOK TERMINATION, OR TYPE 2 THREADED MECHANICAL TERMINATION. ALL INTERNAL TIE TERMINATIONS SHALL ENGAGE PERIPHERAL TIES.
3. PERIPHERAL TIES SHALL BE DEVELOPED BEYOND CORNERS AND OPENINGS A DISTANCE NOT LESS THAN (1) LAP SPLICE.

7 STEEL DECK SCHEDULE & TIE-FORCE REINFORCING PLAN REQUIREMENTS

1" = 1'-0"

Revisions	Date

pka ARCHITECTS

PETERSEN KOLBERG & ASSOCIATES ARCHITECTS/PLANNERS
6969 SW Hampton Street
Portland, OR 97223
phone: 503-968-6800
fax: 503-968-6860
www.pkaarchitects.com

REGISTERED PROFESSIONAL ENGINEER 90542 OREGON JULY 14, 2015 M. BRADLY MOYER
EXPIRES 12-31-16

DEPARTMENT OF VETERANS AFFAIRS
SOUTHERN OREGON REHABILITATION CENTER & CLINICS
8495 Crater Lake Highway, White City, Oregon 97503-3012

kpff
111 SW Fifth Ave., Suite 2500
Portland, OR 97204
O: 503.227.3251
F: 503.227.7980
www.kpff.com

Drawing Title: TYPICAL STEEL DETAILS

SPECIALTY CARE BUILDING - 201B

Date: 11/27/15
Project No.: 131207

Approved: Proj Eng | Approved: Infect Cont | Approved: Chief P&O | Approved: Chief M&R | Approved: Safety Mgr.
Approved: Service Chief | Approved: Chief Facilities Mgmt | Approved: VAMC Director

Building No.: Building 201B | Chkd By/Proj. Mgr: NR | Drawn By: CB | Location

Drawing No.: S6.04
Dwg. of

U.S. DEPARTMENT OF VETERANS AFFAIRS

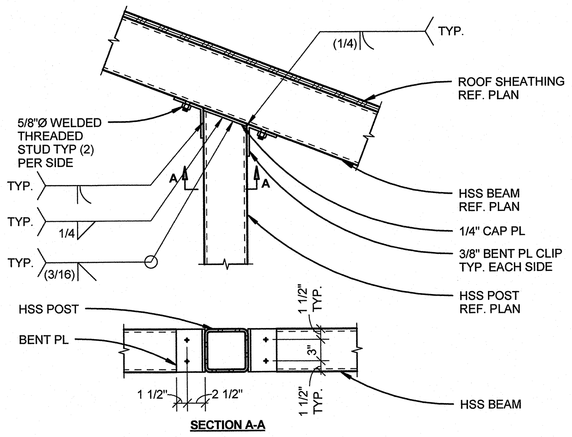

11 TYPICAL MAIN BEAM TO POST CONNECTION

1" = 1'-0" S1.03

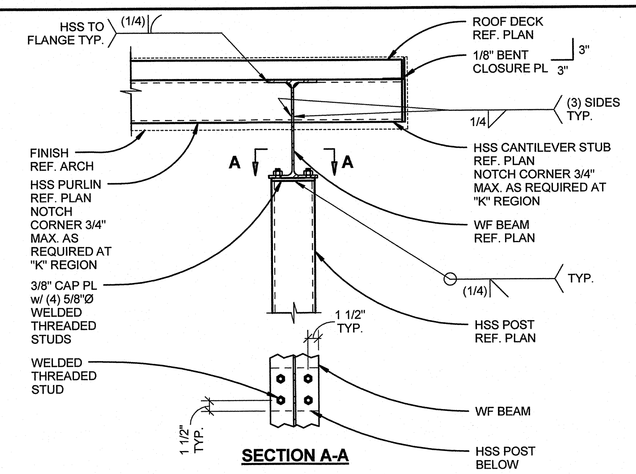

8 TYP. CANOPY BEAM/COLUMN AND PURLIN CONNECTION

1" = 1'-0" S1.02

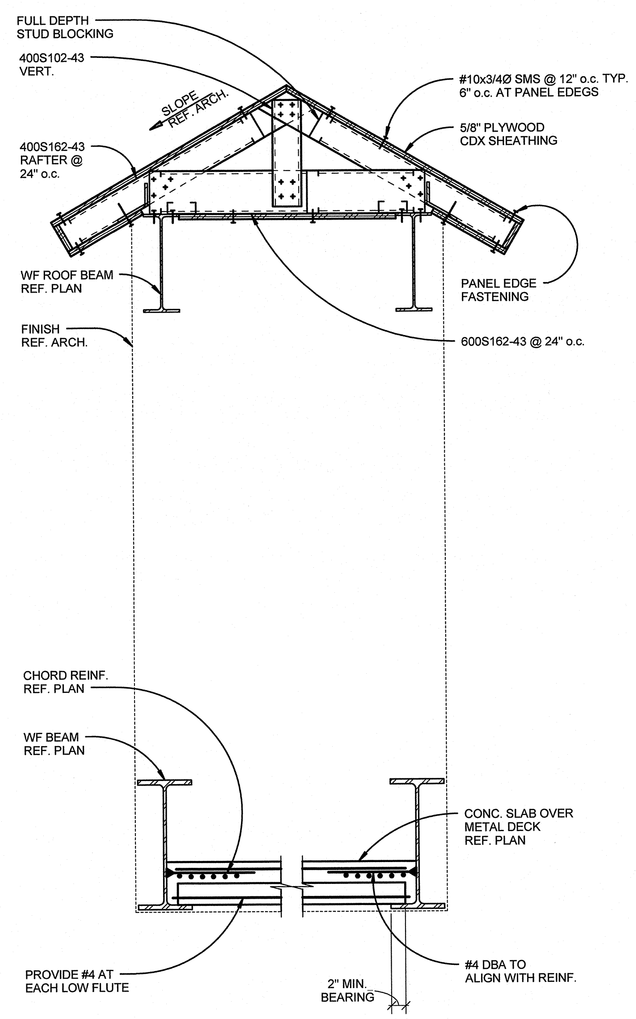

5 SECTION AT SKYBRIDGE

1" = 1'-0" S1.02

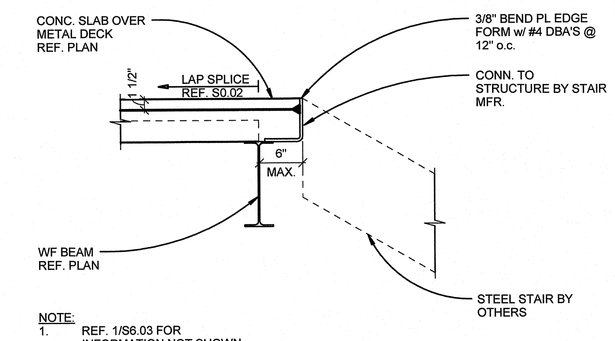

NOTE:
1. REF. 1/S6.03 FOR INFORMATION NOT SHOWN.

1 TYPICAL STAIR LANDING CONNECTION

1" = 1'-0" S1.02

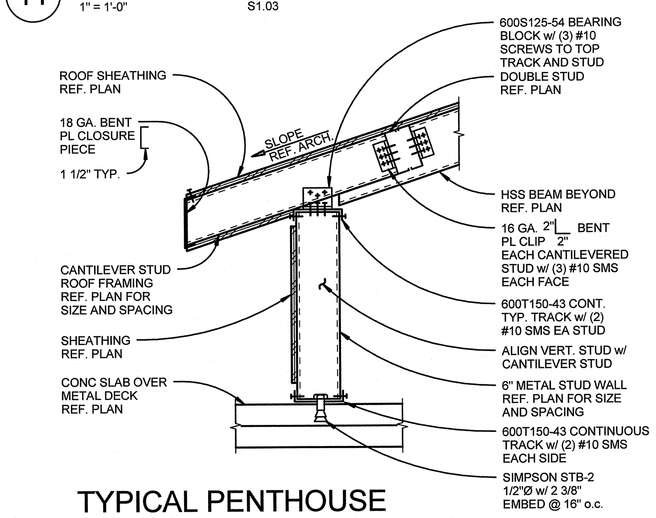

12 TYPICAL PENTHOUSE PONY WALL FRAMING

1" = 1'-0" S1.03

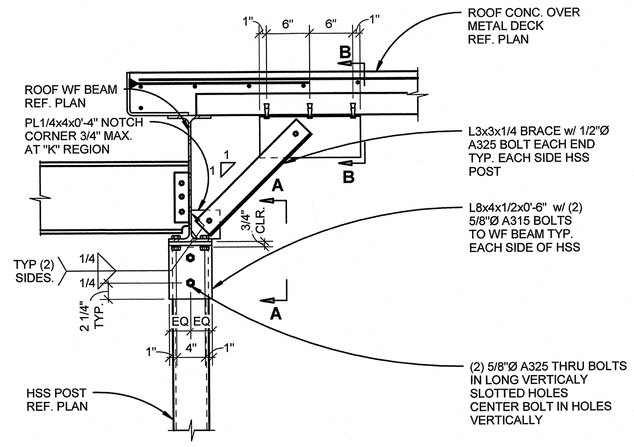

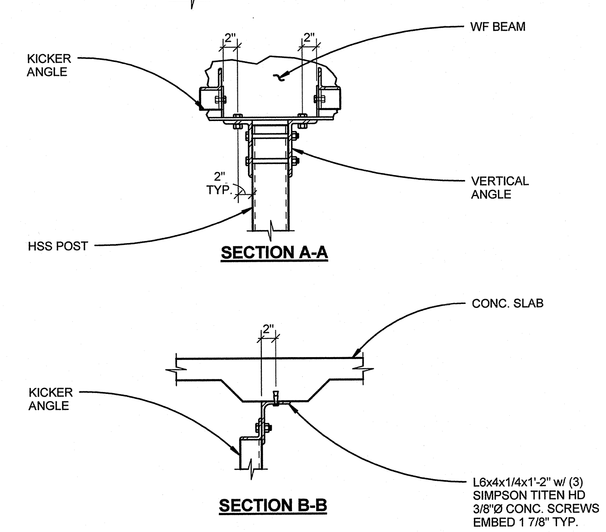

9 SKYBRIDGE SUPPORT POST CONNECTION AT ROOF GIRDER

1" = 1'-0" S1.03

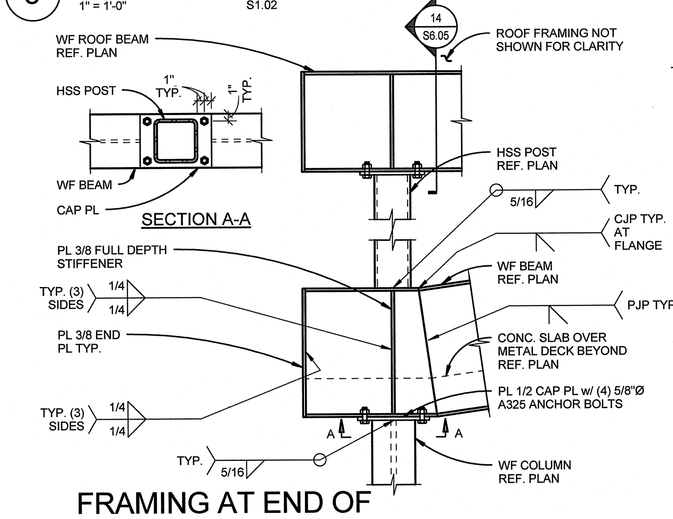

6 FRAMING AT END OF SKYBRIDGE AT FUTURE BUILDING

1" = 1'-0" S1.02

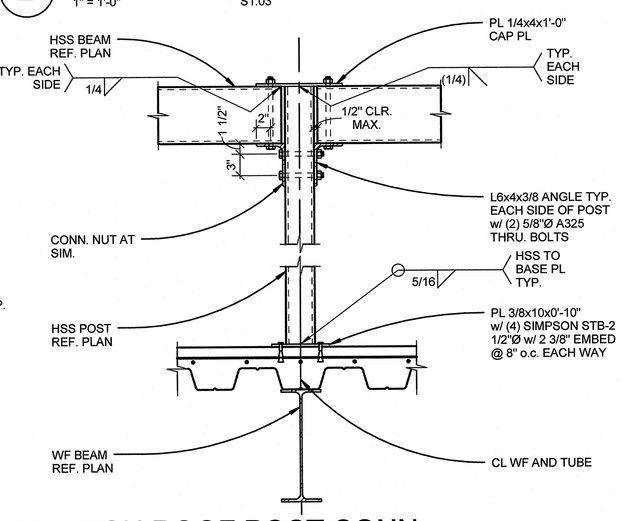

3 HIGH ROOF POST CONN.

1" = 1'-0"

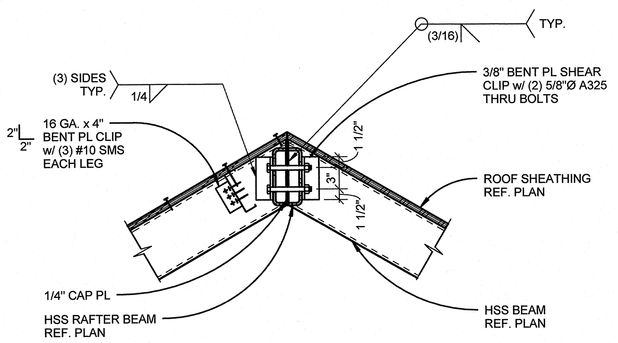

2 TYPICAL RIDGE BEAM CONNECTION

1" = 1'-0" S1.03

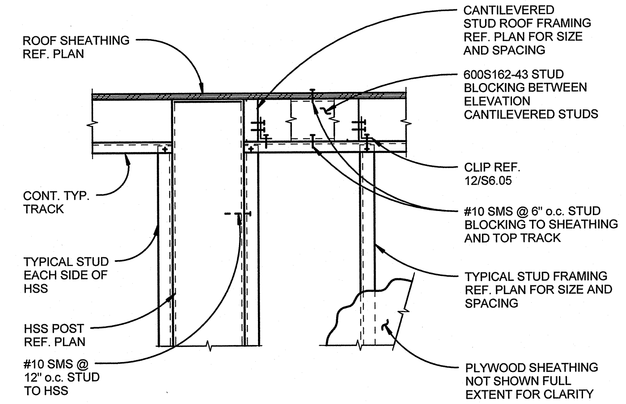

13 TYPICAL PENT HOUSE STUD FRAMING AT HSS POST

1" = 1'-0" S1.03

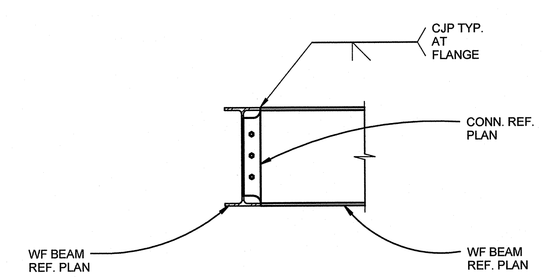

14 MOMENT CONN. AT SKYBRIDGE

1" = 1'-0"

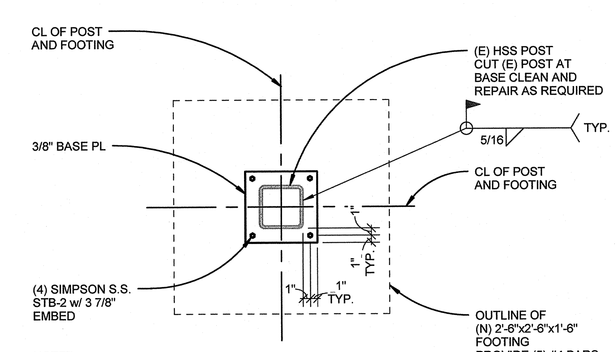

NOTES:
1. REF. LANDSCAPE FOR LOCATION.
2. FIELD VERIFY ALL EXISTING DIMENSIONS AND NOTIFY ARCH. OF ANY DISCREPANCIES.

10 ANCHORAGE AT (E) RELOCATED SMOKING ENCLOSURE

1" = 1'-0"

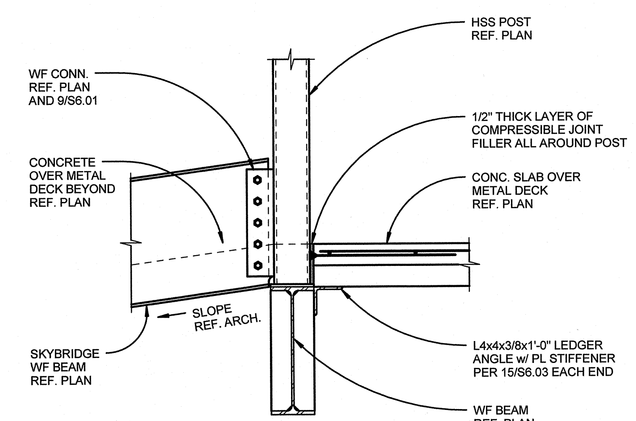

NOTE:
1. REF. 9/S6.02 FOR HSS TO WF CONN.
SKYBRIDGE GIRDER TO MAIN BUILDING CONN. AT LEVEL 2.

7 SKYBRIDGE FRAMING DETAILS

1" = 1'-0" S1.02

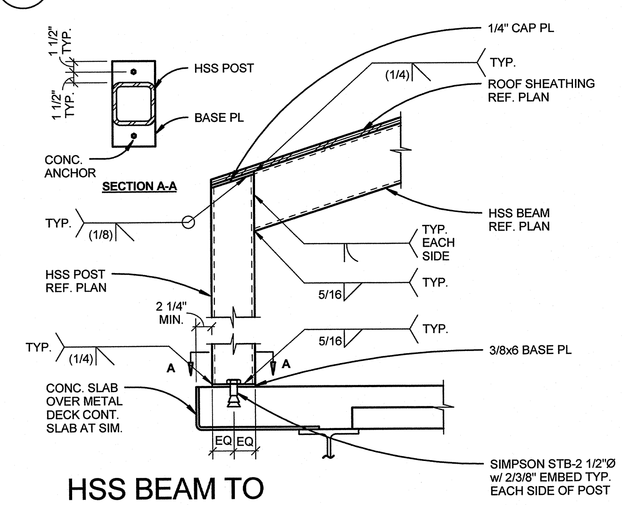

4 HSS BEAM TO POST CONNECTION AT PENTHOUSE

1" = 1'-0" S1.03

Revisions	Date

pka ARCHITECTS

PETERSEN KOLBERG & ASSOCIATES ARCHITECTS/PLANNERS
6969 SW Hampton Street
Portland, OR 97223
phone: 503-968-6800
fax: 503-968-6860
www.pkaarchitects.com

STRUCTURAL REGISTERED PROFESSIONAL ENGINEER 10-642 OREGON JULY 13, 2010 M. BRADLEY MOYER
EXPIRES 12-31-16

DEPARTMENT OF VETERANS AFFAIRS
SOUTHERN OREGON REHABILITATION CENTER & CLINICS
8495 Crater Lake Highway, White City, Oregon 97503-3012

kpff
111 SW Fifth Ave., Suite 2500
Portland, OR 97204
O: 503.227.3251
F: 503.227.7980
www.kpff.com

Drawing Title: STEEL FRAMING DETAILS

Approved: Proj Eng | Approved: Infect Cont | Approved: Chief P&O | Approved: Chief M&R | Approved: Safety Mgr.
Approved: Service Chief | Approved: Chief Facilities Mgmt | Approved: VAMC Director

SPECIALTY CARE BUILDING - 201B

Building No.: Building 201B | Chkd By/Proj. Mgr: NR | Drawn By: CB | Location

Date: 11/27/15
Project No.: 131207
Drawing No.: S6.05
Dwg. of

U.S. DEPARTMENT OF VETERANS AFFAIRS

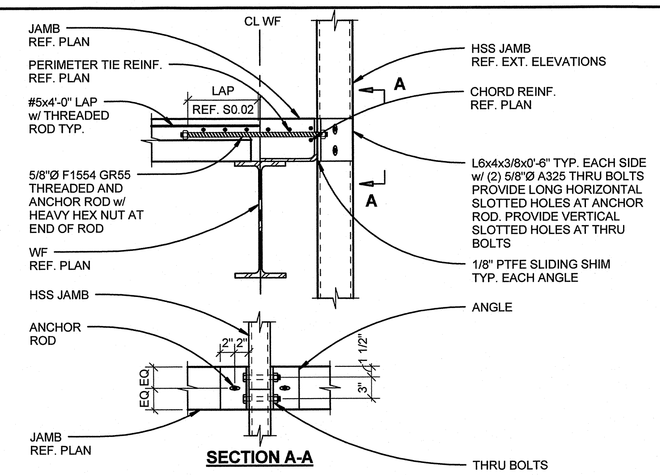

9 TYPICAL HSS FACADE FRAMING CONNECTION TO ELEVATED SLAB
1" = 1'-0" S4.01

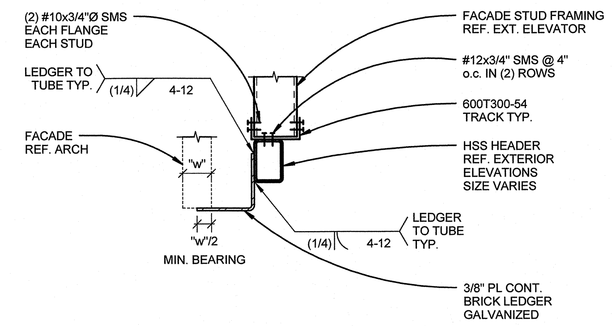

5 TYPICAL FACADE FRAMING AT WINDOW HEADER
1" = 1'-0" S4.01

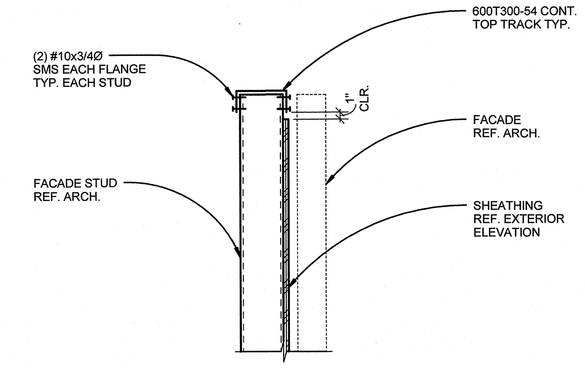

1 TYPICAL TOP OF STUD CONDITION
1" = 1'-0" S4.01

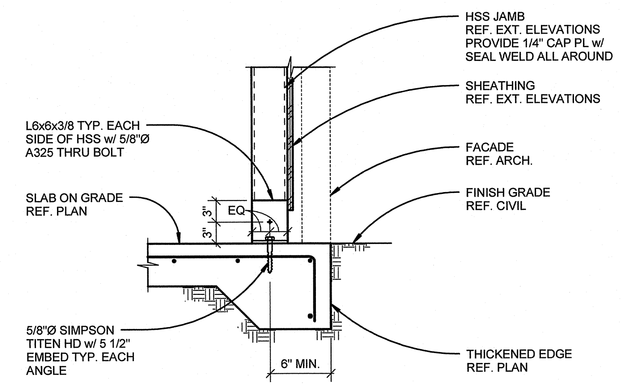

10 TYPICAL HSS FACADE FRAMING CONNECTION IN THICKENED EDGE
1" = 1'-0"

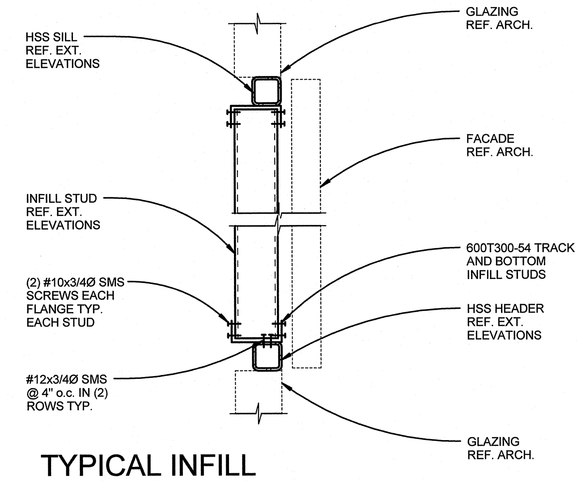

6 TYPICAL INFILL STUD FRAMING AT WINDOW
1" = 1'-0" S4.01

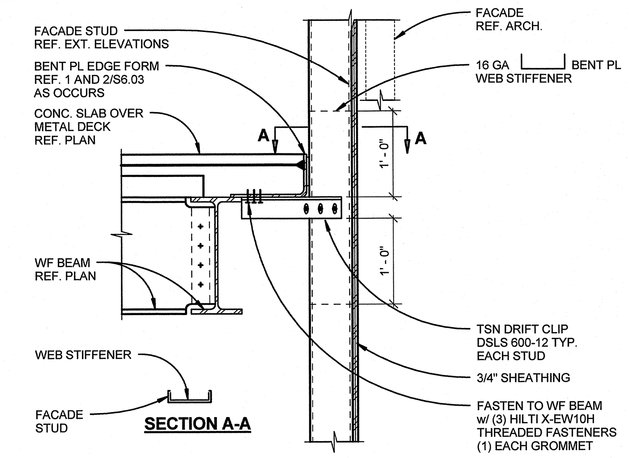

2 TYPICAL FACADE CONNECTION AT ROOF / ELEVATED FLOOR LINE
1" = 1'-0"

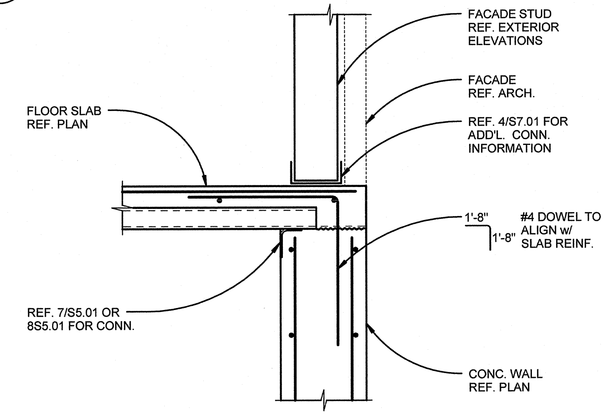

11 FACADE CONNECTOR AT SLAB ON METAL DECK WALL INTERFACE
1" = 1'-0"

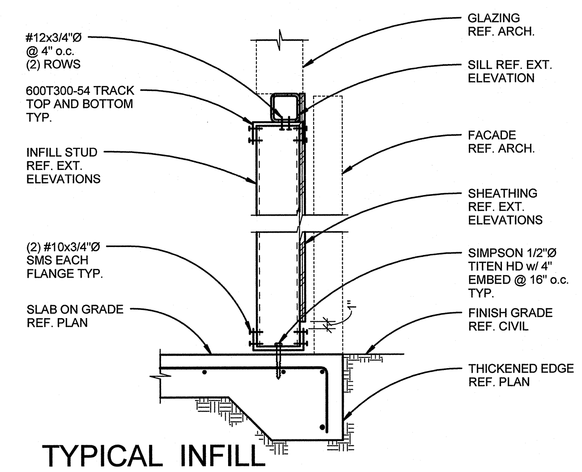

7 TYPICAL INFILL FRAMING AT FIRST FLOOR SILL
1" = 1'-0" S4.01

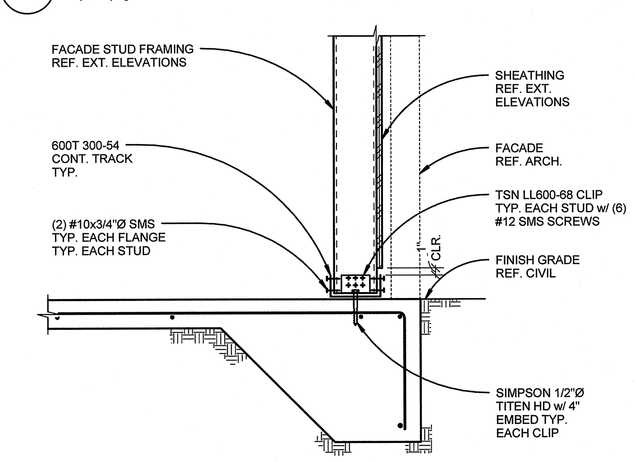

3 TYPICAL FACADE CONNECTION AT SLAB ON GRADE
1" = 1'-0"

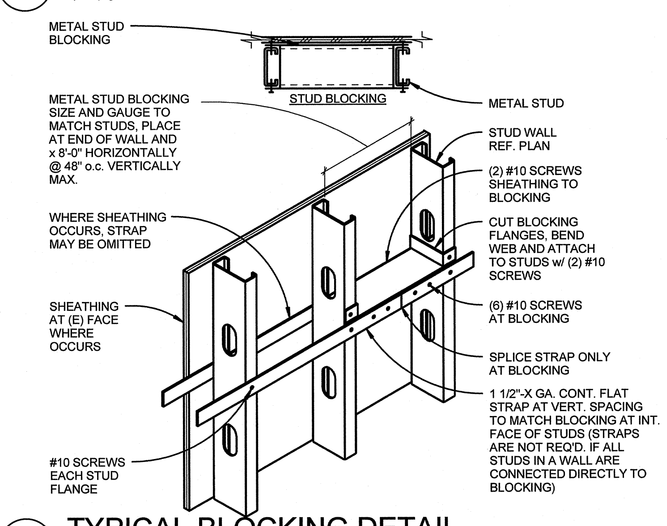

12 TYPICAL BLOCKING DETAIL
1" = 1'-0"

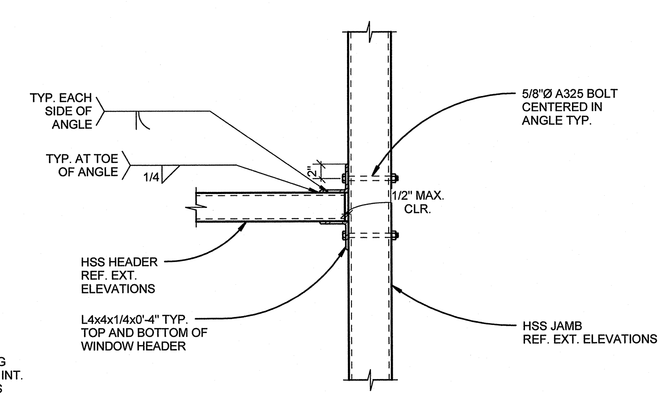

8 TYPICAL HSS HEADER TO HSS JAMB CONNECTION
1" = 1'-0" S4.01

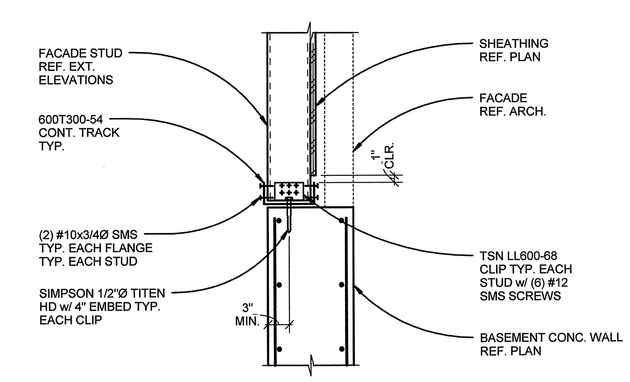

4 TYPICAL FACADE CONNECTION AT CONCRETE WALL
1" = 1'-0" S4.01

Revisions	Date

pka ARCHITECTS

PETERSEN KOLBERG & ASSOCIATES
ARCHITECTS/PLANNERS
6969 SW Hampton Street
Portland, OR 97223
phone: 503-968-6800
fax: 503-968-6860
www.pkaarchitects.com

REGISTERED PROFESSIONAL ENGINEER 10642 OREGON JULY 12, 1974 M. BRADLY MOYER
EXPIRES 12-31-16

DEPARTMENT OF VETERANS AFFAIRS
SOUTHERN OREGON REHABILITATION CENTER & CLINICS
8495 Crater Lake Highway, White City, Oregon 97503-3012

kpff
111 SW Fifth Ave., Suite 2500
Portland, OR 97204
O: 503.227.3251
F: 503.227.7980
www.kpff.com

Drawing Title: TYPICAL FACADE DETAILS

SPECIALTY CARE BUILDING - 201B

Date: 11/27/15
Project No.: 131207

Approved: Proj Eng | Approved: Infect Cont | Approved: Chief P&O | Approved: Chief M&R | Approved: Safety Mgr.
Approved: Service Chief | Approved: Chief Facilities Mgmt | Approved: VAMC Director

Building No.: Building 201B | Chkd By/Proj. Mgr: NR | Drawn By: CB | Location

Drawing No.: S7.01
Dwg. of

U.S. DEPARTMENT OF VETERANS AFFAIRS