CONSTRUCT OPERATING ROOM #8
VA MEDICAL CENTER LOMA LINDA
VA LOMA LINDA HEALTHCARE SYSTEM

VA PROJECT NUMBER 605-14-640

LEO A DALY PROJECT NUMBER 046-10057-000

CONSTRUCTION DOCUMENTS (CD) SUBMITTAL
MARCH 30, 2016

PROJECT TEAM

CLIENT/ OWNER

DEPARTMENT OF VETERAN'S AFFAIRS
FACILITIES MANAGEMENT SERVICE
11201 BENTON STREET
LOMA LINDA, CA 92357
909.825.7084 x5527
VA PROJECT NUMBER: 605-334
ATTN: ALONSO ACOSTA

ARCHITECT

LEO A DALY
550 SOUTH HOPE STREET, 27TH FLOOR
LOS ANGELES, CA 90071
213.629.0100
ATTN: MICHELLE SAQUILAYAN

STRUCTURAL

NABIH YOUSSEF
550 SOUTH HOPE STREET, 17TH FLOOR
LOS ANGELES, CA 90071
213.362.0707
ATTN: ALEJANDRO PENA

MECHANICAL / PLUMBING / FIRE PROTECTION

DHA+CALPEC
150 SOUTH ARROYO PARKWAY, SUITE 100
PASADENA, CA 91105
626.445.8580 x127
ATTN: KEVIN GUSTIN

ELECTRICAL / FIRE ALARM

KSG
111 NORTH JACKSON STREET, SUITE 121
GLENDALE, CA 91105
626.200.5532
ATTN: THEODORE CHAN

TELECOMUNICATIONS AND SECURITY

UCS
2579 W. WOODLAND DR.
ANAHEIM, CA 92801
714.484.3101
ATTN: ROBERT BOHAN

COST ESTIMATOR

CUMMING
660 S. FIGUEROA ST., SUITE 900
LOS ANGELES, CA 90071
213.405.0694
ATTN: ANDREW ANDRAWES

HAZARDOUS MATERIALS

RALPH STONE
10954 SANTA MONICA BLVD.
LOS ANGELES, CA 90025
310.478.1501
ATTN: RICHARD KAHLE

PROJECT DESCRIPTION

THIS PROJECT IS DESIGNED TO RENOVATE A PORTION OF THE OPERATING SUITE ON THIRD FLOOR OF THE MAIN HOSPITAL AT VA LOMA LINDA HEALTHCARE SYSTEM. THE RENOVATION WILL INCLUDE RELOCATION OF OPERATING ROOM #8 (LEAD SHIELDED), EQUIPMENT STORAGE ROOM TO HOUSE THE DA VINCI ROBOTS, STAFF LOCKER ROOMS, BREAKROOM, MEDICATION ROOM AND ANESTHESIA WORKROOMS.

PROJECT AREA: APPROXIMATELY 3,800 SF

CONSTRUCTION DOCUMENTS FULLY SPRINKLERED

No.	Description	Date
1	SCHEMATIC DESIGN (SD)	10/20/2015
2	DESIGN DEVELOPMENT (DD)	01/18/2016
3	CONSTRUCTION DOCUMENTS (CD)	03/30/2016

VA REPRESENTATIVE APPROVALS:

APPROVED: BARBARA FALLEN, MEDICAL CENTER DIRECTOR	APPROVED: KEVIN A. NASSERI-NOORI, M.D., CHIEF OF ANESTHESIA	APPROVED: CURTIS SONG, CHIEF OF INFORMATION AND TECHNOLOGY (OIT)/CIO
APPROVED: DWIGHT EVANS,M.D., CHIEF OF STAFF	APPROVED: GIOVANNI RUIZ, R.N., SURGERY NURSE MANAGER	APPROVED: NORVELL KING, CHIEF OF POLICE
APPROVED: MELISSA G. LLOYD, ASSOCIATE DIRECTOR FOR PATIENT CARE AND NURSING ADMINISTRATION	APPROVED: JULIANA MONTOYA, CHIEF OF FACILITY MANAGEMENT	APPROVED: JONATHAN VINSKEY, SAFETY MANAGER
APPROVED: SHANE ELLIOT, ASSOCIATE DIRECTOR FOR ADMINISTRATION	APPROVED: ANTHONY STRELETZ, CHIEF OF PROJECTS	APPROVED: MICHAEL B. ING, M.D., CHIEF OF INFECTIOUS DISEASE/ INFECTION CONTROL
APPROVED: PRACHI ASHER, ASSISTANT DIRECTOR	APPROVED: LARRY BARRET, ENERGY MANAGER, FMS	APPROVED: ALONSO ACOSTA, PROJECT ENGINEER/ COR, FMS
APPROVED: GEORGE RIVERA, M.D., CHIEF OF SURGERY	APPROVED: HASSAN CORBIN, O&M SUPERVISOR, FMS	APPROVED: JAMES BARBER, CONTRACTING OFFICER

VA FORM 08-6231

Seals and Signatures

LICENSED ARCHITECT MICHELLE B SAQUILAYAN C. 32660 EXP. 10-31-16 STATE OF CALIFORNIA

ARCHITECTS/ENGINEERS:

LEO A DALY
PLANNING ARCHITECTURE ENGINEERING INTERIORS
550 South Hope Street, 27th Floor
Los Angeles, California 90071, USA
213-629-0100 F213-629-0070
EST. 1915

Drawing Title: **COVER SHEET**

Approved: Project Director

Project Title: **CONSTRUCT OPERATING ROOM #8**

Location: 11201 BENTON STREET LOMA LINDA, CA 92357

Date: 03/30/2016 | Checked: MS | Drawn: TV

Project Number: 605-14-640

Building Number: 1

Drawing Number: **GI000**

Office of Construction and Facilities Management

Department of Veterans Affairs

3/25/2016 3:44:55 PM C:\Users\mbsaquilayan\Documents\Autodesk Revit 2013 Projects\046-10057-000_Central_mbsaquilayan.rvt

SHEET NO.	SHEET NAME	SD	DD	CD
16 - T - TELECOMMUNICATION				
ET001	TITLE PAGE, SYMBOLS & NOTES	●	●	●
ET101	FLOOR PLAN - LEVEL 3 - AREA D DEMO	●	●	●
ET200	FLOOR PLAN - LEVEL 3 - SITE TELECOMMUNICATIONS			●
ET201	FLOOR PLAN - LEVEL 3 - AREA D TELECOMMUNICATIONS	●	●	●
ET301	ROBOTIC OR FLOOR PLAN & RCP	●	●	●
ET302	ROBOTIC OR - RCP			●
ET401	DETAILS	●	●	●
17 - V - VENDOR (FOR REFERENCE ONLY)				
TITLE	STRYKER COVERSHEET			●
R-OR8	STRYKER EQUIPMENT LAYOUT - OR#8			●
P1	STRYKER PRE- INSTALL NOTES			●
P2	STRYKER PRE- INSTALL NOTES			●

SHEET NO.	SHEET NAME	SD	DD	CD
01 - G - GENERAL				
GI000	COVER SHEET	●	●	●
GI001	SHEET INDEX	●	●	●
GI002	PROJECT INFORMATION AND CODE ANALYSIS	●	●	●
GI003	STANDARD ABBREVIATIONS	●	●	●
GI004	ACCESSIBILITY NOTES AND DIAGRAMS	●	●	●
GI005	ACCESSIBILITY DIAGRAMS	●	●	●
GI006	TYPICAL TOILET ACCESSORY MOUNTING HEIGHTS	●	●	●
GI007	TYPICAL DEVICE MOUNTING HEIGHTS	●	●	●
GI008	PHASING PLAN	●	●	●
GI008A	PHASING PLAN		●	●
GI009	LIFE SAFETY PLAN - LEVEL 3 - AREA D	●	●	●
GI010	INTERIOR RENDERING PERSPECTIVES	●	●	●
07 - S - STRUCTURAL				
SE001	GENERAL NOTES	●	●	●
SE101	FLOOR PLAN - LEVEL 3 - AREA D	●	●	●
SE102	INTERSTITIAL FLOOR PLAN - LEVEL 3 - AREA D		●	●
SE400	SECTIONS & DETAILS	●	●	●
SE500	EQUIPMENT ANCHORAGE SCHEDULES & DETAILS	●	●	●
08 - A - ARCHITECTURAL				
AE001	ARCHITECTURAL SYMBOLS	●	●	●
AS101	ARCHITECTURAL SITE PLAN / ACCESSIBLE PATH OF TRAVEL	●	●	●
AD101	DEMOLITION FLOOR PLAN - LEVEL 3 -AREA D	●	●	●
AD102	DEMOLITION REFLECTED CEILING PLAN - LEVEL 3 -AREA D	●	●	●
AE101	FLOOR PLAN - LEVEL 3 - AREA D	●	●	●
AE102	REFLECTED CEILING PLAN - LEVEL 3 - AREA D	●	●	●
AE201	INTERIOR ELEVATIONS	●	●	●
AE202	INTERIOR ELEVATIONS	●	●	●
AE301	PARTIAL BUILDING SECTIONS (FOR REFERENCE ONLY)	●	●	●
AE501	PARTITION TYPES		●	●
AE502	PARTITION DETAILS		●	●
AE503	PARTITION DETAILS		●	●
AE504	PARTITION DETAILS AND MISC. DETAILS		●	●
AE601	DOOR, FRAME, WINDOW TYPES AND DOOR HARDWARE SCHEDULE		●	●
AE610	SIGNAGE AND MISC. DETAILS			●
AE910	ACOUSTICAL CEILING DETAILS		●	●
AE911	GYPSUM BOARD CEILING DETAILS		●	●
09 - I - INTERIORS				
AI101	FLOOR FINISH PLAN - LEVEL 3 - AREA D	●	●	●
AI102	WALL FINISH PLAN	●	●	●
AI301	MATERIAL FINISH SCHEDULE	●	●	●
10 - Q - EQUIPMENT				
QH101	FURNITURE, FURNISHING, AND EQUIPMENT PLAN - LEVEL 3 - AREA D	●	●	●
QH201	EQUIPMENT SCHEDULE		●	●
11 - F - FIRE PROTECTION				
FA001	FIRE ALARM SYSTEM LEGEND AND GENERAL NOTES	●	●	●
FAD101	FIRE ALARM SYSTEM DEMOLITION PLAN	●	●	●
FA101	FIRE ALARM SYSTEM PLAN	●	●	●
FA102	FIRE ALARM SYSTEM PARTIAL 3RD FLOOR PLAN	●	●	●
FA201	FIRE ALARM SYSTEM RISER DIAGRAM & SCHEDULES			●
FA301	SEQUENCE OF OPERATIONS			●
FX001	FIRE SUPPRESSION LEGEND AND NOTES		●	●
FD101	FIRE SUPPRESSION DEMO FLOOR PLAN - LEVEL 3 -AREA D			●
FX101	FIRE SUPPRESSION - LEVEL 3 - AREA D		●	●
FX102	FIRE SUPPRESSION INTERSITIAL PLAN - LEVEL 3			●
12 - P - PLUMBING				
PL001	PLUMBING LEGENDS AND NOTES	●	●	●
PL002	PLUMBING EQUIPMENT AND FIXTURE SCHEDULES	●	●	●
PD101	PLUMBING DEMOLITION PLAN - LEVEL 3 - AREA D	●	●	●
PD102	PLUMBING DEMOLITION INTERSTITIAL PLAN - LEVEL 2P - AREA D - (SOIL & WASTE)	●	●	●
PD103	PLUMBING INTERSTITIAL DEMOLITION PLAN - LEVEL 3 - AREA D	●	●	●
PL101	PLUMBING FLOOR PLAN - LEVEL 3 - AREA D	●	●	●
PL102	PLUMBING INTERSTITIAL PLAN - LEVEL 2P - AREA D (SOIL & WASTE)	●	●	●
PL103	PLUMBING INTERSTITIAL PLAN - LEVEL 3 - AREA D	●	●	●
14 - M - MECHANICAL				
MH001	MECHANICAL LEGENDS AND NOTES	●	●	●
MH002	MECHANICAL SCHEDULES		●	●
MD101	MECHANICAL DEMOLITION PLAN - LEVEL 3 - AREA D		●	●
MD102	MECHANICAL INTERSTITIAL DEMOLITION PLAN - LEVEL 3 - AREA D	●	●	●
MH101	MECHANICAL FLOOR PLAN - LEVEL 3 - AREA D	●	●	●
MH102A	MECHANICAL INTERSTITIAL PLAN - LEVEL 3 - AREA D		●	●
MH102B	MECHANICAL INTERSTITIAL PLAN - LEVEL 3 - AREA D			●
MH401	MECHANICAL DETAILS			●
MI501	MECHANICAL CONTROL LEGEND, NOTES AND DIAGRAMS		●	●
15 - E - ELECTRICAL				
E001	ELECTRICAL LEGEND AND GENERAL NOTES	●	●	●
ED101	LIGHTING DEMOLITION PLAN	●	●	●
ED102	POWER DEMOLITION PLAN	●	●	●
EL101	LIGHTING PLAN	●	●	●
EP101	POWER PLAN	●	●	●
E101	PARTIAL 3RD FLOOR ELECTRICAL PLAN	●	●	●
E102	PARTIAL 3RD FLOOR INTERSTITIAL ELECTRICAL PLAN		●	●
E201	PARTIAL SINGLE LINE DIAGRAMS AND LOAD SCHEDULES	●	●	●
E301	PANEL AND LUMINARE SCHEDULE		●	●
E401	SCHEDULES AND DIAGRAMS			●

CONSTRUCTION DOCUMENTS
FULLY SPRINKLERED

No.	Description	Date
1	SCHEMATIC DESIGN (SD)	10/20/2015
2	DESIGN DEVELOPMENT (DD)	01/18/2016
3	CONSTRUCTION DOCUMENTS (CD)	03/30/2016

CONSULTANTS:

(SEE PROJECT TEAM DIRECTORY ON GI000 COVER SHEET)

Seals and Signatures

LICENSED ARCHITECT
MICHELLE B SAQUILAYAN
LICENSE NO. C 32660
EXP. DATE 10-31-2016
STATE OF CALIFORNIA

ARCHITECTS/ENGINEERS:

LEO A DALY
PLANNING ARCHITECTURE ENGINEERING INTERIORS
550 South Hope Street, 27th Floor
Los Angeles, California 90071, USA
213-629-0100 F213-629-0070
EST. 1915

Drawing Title
SHEET INDEX

Approved: Project Director

Project Title
CONSTRUCT OPERATING ROOM #8

Location
11201 BENTON STREET
LOMA LINDA, CA 92357

Date 03/30/2016 | Checked MS | Drawn TV

Project Number 605-14-640

Building Number 1

Drawing Number
GI001

Office of Construction and Facilities Management

Department of Veterans Affairs

VA FORM 08-6231

3/25/2016 7:55:06 PM C:\Users\mbsaquilayan\Documents\Autodesk\Revit 2013 Projects\046-10037-000_Central_mbsaquilayan.rvt

CODE ANALYSIS

BUILDING OCCUPANCY AND CONSTRUCTION TYPE: NFPA 101/NFPA 220:

NFPA 101 CHAPTER 6 OCCUPANCY GROUP CLASSIFICATIONS:

MULTIPLE OCCUPANCY: EXISTING HEALTHCARE, AMBULATORY HEALTHCARE, BUSINESS

NFPA 220 CONSTRUCTION TYPE CLASSIFICATION:

TYPE II (222) *

BASIS: EXISTING STRUCTURE IS STRUCTURAL STEEL FRAME WITH REINFORCED CONCRETE. FLOOR SLABS ARE 7.25" CONCRETE ON STEEL DECK, ROOF SLAB IS 6.25" CONCRETE. FLOOR-CEILING ASSEMBLIES ARE POURED GYPSUM CONCRETE SUPPORTED ON SUSPENDED WIRE TRUSSES. ALL STRUCTURAL STEEL IS PROTECTED WITH SPRAYED-ON FIREPROOFING OR FULLY ENCLOSED.

EQUIVALENT IBC CONSTRUCTION TYPE: **TYPE I-A:** (SECTION 602.3)

*CONSTRUCTION TYPE IS ESTIMATED BASED ON AS-BUILT DRAWINGS RECEIVED. TESTING OF ALL FIREPROOFING MATERIALS IS NECESSARY TO VERIFY RATING OF ELEMENTS.

NFPA 220 TABLE 4.1.1 FIRE RESISTANCE RATINGS

CONSTRUCTION TYPE I (200)

BUILDING ELEMENT	RATING REQUIRED	CONSTRUCTION REQUIREMENT	EXISTING CONDITION
EXTERIOR BEARING WALLS	2 HR.	MIN 5" PER ACI 216R	N/A
INTERIOR BEARING WALLS	2 HR.	NONE	N/A
COLUMNS	2 HR.	NONE	STRUCTURAL STEEL COLUMNS WITH SPRAYED ON FIREPROOFING- ASSUME 3-HR RATING
BEAMS	2 HR.	NONE	STRUCTURAL STEEL BEAMS WITH SPRAYED ON FIREPROOFING- ASSUME 3HR. RATING
FLOOR-CEILING ASSEMBLIES	2 HR.	NONE	CONCRETE SLAB ON METAL DECK = 7.25" + SUSPENDED POURED GYPSUM CONCRETE PLATFORM SUPPORTED ON METAL WIRE TRUSSES AND HANGER RODS
ROOF-CEILING ASSEMBLY	2 HR.	NONE	CONCRETE SLAB ON METAL DECK = 6.25" + SUSPENDED POURED GYPSUM CONCRETE PLATFORM SUPPORTED ON METAL WIRE TRUSSES AND HANGER RODS
INTERIOR NON-BEARING WALLS	0 HR.	NONE	NEW PARTITIONS TO BE NON-COMBUSTIBLE CONSTRUCTION
EXTERIOR NON-BEARING WALLS	0 HR.	NONE	STUCCO ON METAL LATH SUPPORTED BY METAL STUD FRAMING

BUILDING HEIGHT AND AREA LIMITATIONS:

HEALTHCARE OCCUPANCY - NFPA 19.1.6: MINIMUM CONSTRUCTION REQUIREMENTS

NFPA 19.1.6.1: HEALTHCARE OCCUPANCIES SHALL BE LIMITED TO THE BUILDING CONSTRUCTION TYPES SPECIFIED IN TABLE 19.1.6.7, UNLESS OTHERWISE PERMITTED BY 19.1.6.2 THROUGH 19.1.6.7 *(SEE 8.2.1).*

ACCORDING TO NFPA 101 (2015) THE EXISTING BUILDING MEETS OR EXCEEDS THE CONSTRUCTION TYPE CRITERIA REQUIRED FOR A 4 STORY BUILDING WITH EXISTING HEALTHCARE OCCUPANCY.

NFPA 220 , TABLE A.4.1.1 CROSS REFERENCE OF BUILDING CONSTRUCTION TYPES:
IBC EQUIVALENT CONSTRUCTION TYPE: IB

NFPA CHAPTER 6 REQUIREMENTS

NFPA 6.1.14.1.3 WHERE INCIDENTAL TO ANOTHER OCCUPANCY, AREAS USED AS FOLLOWS SHALL PERMITTED TO BE CONSIDERED PART OF THE PREDOMINANT OCCUPANCY AND SHALL BE SUBJECT TO THE PROVISIONS OF THE CODE THAT APPLY TO THE PREDOMINANT OCCUPANCY.

(1) MERCANTILE, BUSINESS, INDUSTRIAL, OR STORAGE USE.

(2) NONRESIDENTIAL USE WITH AN OCCUPANT LOAD FEWER THAN THAT ESTABLISHED BY SECTION 6.1 FOR OCCUPANT THRESHOLD

STERILE PROCESSING FACILITY (INDUSTRIAL OCCUPANCY) AND ASSOCIATED ADMINISTRATIVE AREA ON THE THIRD LEVEL (SCOPE OF THIS PROJECT), QUALIFY AS INCIDENTAL USES AND DO NOT REQUIRE SEPARATION FROM PREDOMINANT OCCUPANCY

NFPA TABLE 6.1.14.4.1 (B) REQUIRED SEPARATION OF OCCUPANCIES

EXISTING HEALTHCARE	AMBULATORY HEALTHCARE	**2 HR**
EXISTING HEALTHCARE	BUSINESS	**2 HR**
AMBULATORY HEALTHCARE	BUSINESS	**1 HR**

NFPA 6.1.14.4.3: **MINIMUM** FIRE RESISTANCE RATING SPECIFIED IN TABLE 6.1.14.1 (b) SHALL BE PERMITTED TO BE REDUCED BY 1-HR WHERE THE BUILDING IS PROTECTED THROUGHOUT BY AN APPROVED AUTOMATIC SPRINKLER SYSTEM.

NFPA CHAPTER 7 REQUIREMENTS

NFPA TABLE 7.3.1.2

USE	SF PER PERSON
HEALTH CARE INPATIENT TREATMENT SLEEPING DEPT. AMBULATORY	 240 120 100
BUSINESS	100
INDUSTRIAL GENERAL AND HIGH HAZARD	100

NFPA TABLE 7.3.3.1

AREA	STAIRWAY (WIDTH PER PERSON)	LEVEL COMPONENT (WIDTH PER PERSON)
HEALTH CARE, SPRINKLERED	0.3 INCHES	0.2 INCHES
ALL OTHERS	0.3 INCHES	0.2 INCHES

NFPA EXISTING HEALTH CARE OCCUPANCY REQUIREMENTS

NFPA 19.2.4.1 NOT LESS THAN TWO EXITS SHALL BE PROVIDED ON EVERY STORY

NFPA 19.2.5.2 DEAD - END CORRIDORS SHALL NOT EXCEED 30 FEET.

NFPA 19.2.5.7.1.3 SUITE HAZARDOUS CONTENTS AREAS

(A) INTERVENING ROOMS SHALL NOT BE HAZARDOUS AREAS AS DETERMINED BY 19.3.2

(B) HAZARDOUS AREAS WITHIN A SUITE SHALL BE SEPARATED FROM THE REMAINDER OF THE SUITE IN ACCORDANCE WITH 19.3.2.1, UNLESS OTHERWISE PROVIDED IN 19.2.5.7.1.3 (C) OR 19.2.5.7.1.3 (D)

(C) HAZARDOUS AREAS WITHIN A SUITE SHALL NOT BE REQUIRED TO BE SEPARATED FROM THE REMAINDER OF THE SUITE WHERE COMPLYING WITH BOTH OF THE FOLLOWING:
(1) THE SUITE IS PRIMARILY A HAZARDOUS AREA.
(2) THE SUITE IS SEPARATED FROM THE REST OF THE HEALTH CARE FACILITY AS REQUIRED FOR A HAZARDOUS AREA BY 19.3.2.1

(D) SPACES CONTAINING STERILE SURGICAL MATERIALS LIMITED TO A ONE-DAY SUPPLY IN OPERATING SUITES OR SIMILAR SPACES THAT ARE SPRINKLERED IN ACCORDANCE WITH 19.3.5.7 SHALL BE PERMITTED TO BE OPEN TO THE REMAINDER OF THE SUITE WITHOUT SEPARATION .

NFPA 19.2.5.7.4 NON-PATIENT CARE SUITES. THE EGRESS PROVISIONS FOR NON-PATIENT-CARE SUITES SHALL BE IN ACCORDANCE WITH THE PRIMARY USE AND OCCUPANCY OF THE SPACE.

NFPA 19.2.6.2.1 TRAVEL DISTANCE BETWEEN ANY POINT IN A ROOM AND AN EXIT SHALL NOT EXCEED 150 FT

NFPA 19.2.6.2.3 THE MAXIMUM TRAVEL DISTANCE SPECIFIED IN 19.2.6.2.1 SHALL BE PERMITTED TO BE INCREASED BY 50 FT (15 M) IN BUILDINGS PROTECTED THROUGHOUT BY AN APPROVED AUTOMATIC SPRINKLER SYSTEM IN ACCORDANCE WITH 19.3.5.7.

NFPA 19.3.1 PROTECTION OF VERTICAL OPENINGS. ANY VERTICAL OPENINGS SHALL BE ENCLOSED OR PROTECTED IN ACCORDANCE WITH SECTION 8.6, UNLESS OTHERWISE MODIFIED BY 19.3.1.1 THROUGH 19.3.1.8.

NFPA 19.3.1.1 WHERE ENCLOSURE IS PROVIDED, THE CONSTRUCTION SHALL NOT BE LESS THAN A 1-HOUR FIRE RESISTANCE RATING.

NFPA 19.3.2.1 HAZARDOUS AREAS. ANY HAZARDOUS AREAS SHALL BE SAFEGUARDED BY A FIRE BARRIER HAVING A 1-HOUR FIRE RESISTANCE RATING OR SHALL BE PROVIDED WITH AN APPROVED AUTOMATIC EXTINGUISHING SYSTEM IN ACCORDANCE WITH 8.7.1.

PROJECT SYMBOLS

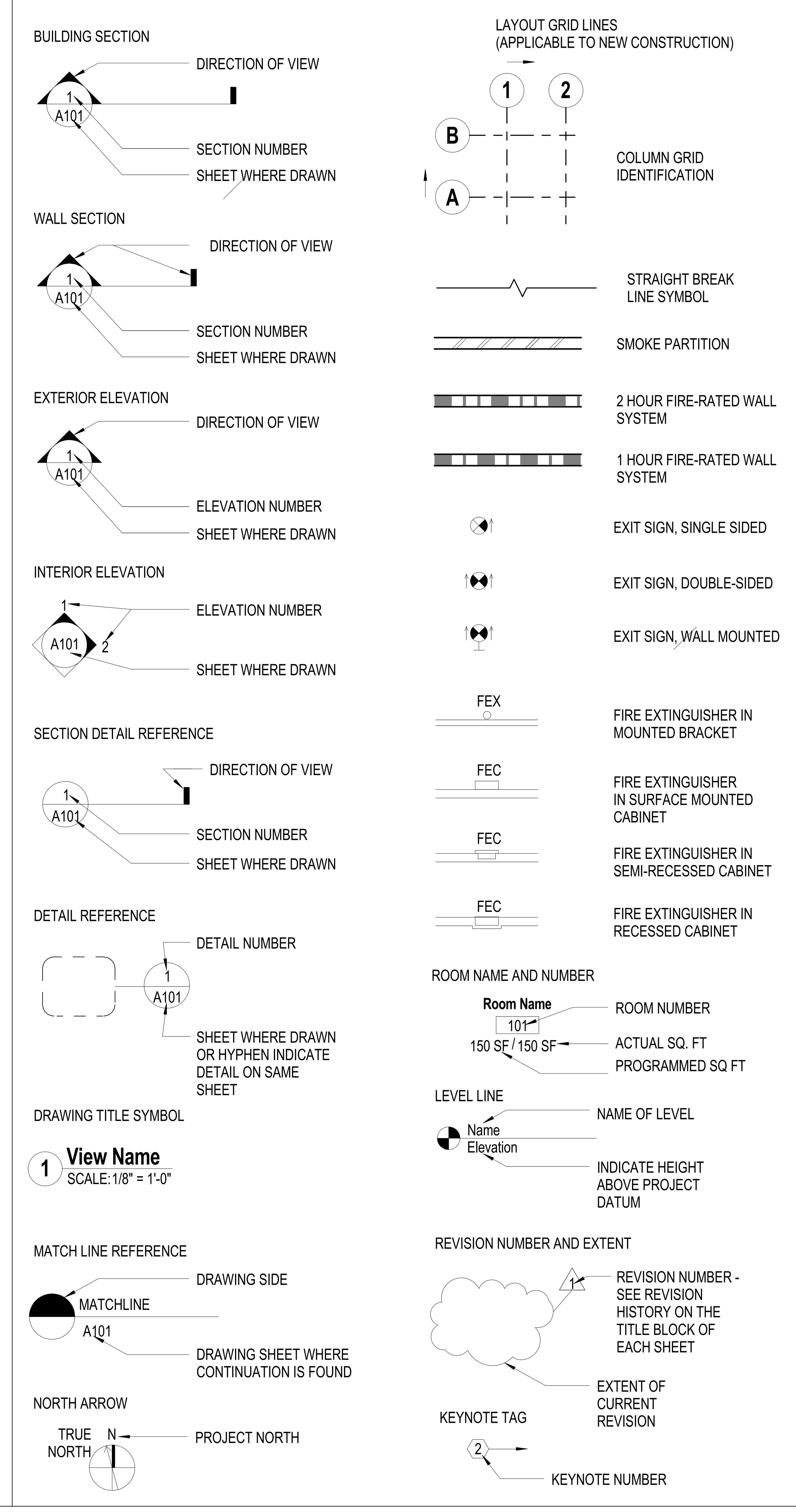

INFECTION CONTROL NOTES

1. ADJACENT AREAS OF 3RD FLOOR OPERATING ROOM AREA OF WORK WILL REMAIN OPERATIONAL 24 HOURS A DAY, 7 DAYS A WEEK. THE CONTRACTOR MUST ENSURE THAT A PATH OF TRAVEL BETWEEN THESE BUILDINGS , AS SHOWN, IS MAINTAINED AT ALL TIMES.
2. BEFORE STARTING CONSTRUCTION, THE CONTRACTOR IS TO PROVIDE A COMPLETE ACCESS PATH / ROUTE FROM THE PROPOSED CONSTRUCTION STAGING AREA ON SITE TO AREA OF WORK IN OR SUITE
3. WITH THE OWNERS APPROVAL THE CONTRACTOR MAY USE ELEVATOR S-4 & S-5 AND STAIR-8 TO TRANSPORT EQUIPMENT AND MATERIALS INTO AND OUT OF THE 'NEW WORK' AREA.
4. THE OWNER WILL BE RESPONSIBLE FOR REMOVING ALL EXISTING EQUIPMENT CURRENTLY IN THE 'NEW WORK' AREA. ONCE THE AREA IS RELEASED TO THE CONTRACTOR, THE CONTRACTOR MAY START AND COMPLETE WORK SHOWN IN THE CONSTRUCTION DOCUMENTS.
5. CONTRACTOR TO PROVIDE CONSTRUCTION BARRIERS, TEMPORARY ONE HOUR PARTITIONS AND SMOKE BARRIERS. TEMPORARY WALLS ARE TO BE CONSTRUCTED / MOVED / DEMOLISHED PER THE PHASING DIAGRAMS.
6. INCLUDE TEMPORARY 20 MINUTE DOORS AT TEMPORARY 1 HOUR WALLS AS REQUIRED FOR CONSTRUCTION.
7. UPON COMPLETION OF WORK, REMOVE BARRIERS CAREFULLY TO MINIMIZE SPREAD OF DIRT AND DEBRIS ASSOCIATED WITH THE CONSTRUCTION. DO NOT REMOVE FINAL CONSTRUCTION BARRIERS UNTIL COMPLETED PROJECT IS INSPECTED AND APPROVED BY THE OWNER.
8. COVER CONSTRUCTION WASTE IN TIGHTLY SEALED RECEPTACLES OR CARTS BEFORE TRANSPORTING. TAPE AND SEAL COVERING OVER CONTAINERS UNLESS A SOLID TIGHT CONTAINER LID IS PROVIDED. DEBRIS REMOVAL, TRAVEL PATH AND SCHEDULE SHALL BE COORDINATED WITH THE OWNERS OPERATIONAL HOURS.
9. THE WORK AREAS ARE TO BE KEPT CLEAN, CLEAR AND FREE OF DEBRIS. CONSTRUCTION MATERIALS AND PARTIALLY INSTALLED WORK CANNOT INTERFERE WITH THE OWNER'S OPERATIONS OR CREATE A SAFETY HAZARD.
10. THE CONTRACTOR SHALL SWEEP, VACUUM, MOP CONSTRUCTION AREAS CLEAN AT THE END OF THE WORK DAY. KEEP NOISE AND DUST TO A MINIMUM AT ALL TIMES. USE FILTERED VACUUMS.
11. WET MOP AREA WITH DISINFECTANT WHERE APPLICABLE.
12. MAINTAIN NEGATIVE AIR PRESSURE WITHIN WORK SITE. PROVIDE 'AIR SCRUBBERS' AT CONSTRUCTION AREAS. DUST, FUMES, ETC. MUST BE EXHAUSTED OUTSIDE AND AWAY FROM ANY AIR INTAKE EQUIPMENT.
13. ISOLATE HVAC SYSTEMS IN AREAS WHERE WORK IS BEING DONE TO PREVENT CONTAMINATION OF DUCT SYSTEMS.
14. COMPLETE ALL CRITICAL CONSTRUCTION BARRIERS BEFORE DEMOLITION / CONSTRUCTION WORK BEGINS.
15. SEAL ALL EXISTING UNUSED DOORS TO PREVENT THE GENEAL PUBLIC FROM ENTERING THE DEMOLITION / CONSTRUCTION AREAS.
16. ALL CONSTRUCTION PERSONEL ENTERING / EXITING THE WORK SITE VIA PUBLIC PATH OF TRAVEL MUST WEAR SHOE COVERS. SHOE COVERS MUST BE CHANGED EACH TIME THE WORKER EXITS THE WORK AREA.
17. PLACE DUST MATS AND ENTRANCES / EXITS TO THE CONSTRUCTION ZONE. CLEAN MATS FROM DUST DAILY OR EARLIER AS REQUIRED.
18. IF EXISTING LIFE SAFETY SYSTEM IS SHUT OFF FOR CONSTRUCTION, THE CONTRACTOR IS TO PROVIDE A 24 HOUR FIRE WATCH UNTIL THE SYSTEM IS BACK ON LINE.

PROJECT GENERAL NOTES

A. THE FOLLOWING GENERAL NOTES APPLY TO THE ENTIRE SET OF DRAWINGS LISTED BY THE "SHEET INDEX".

B. FOR GENERAL NOTES, ABBREVIATIONS, AND SYMBOLS APPLICABLE ONLY TO THE DRAWINGS OF ONE DISCIPLINE, REFER TO THE DRAWINGS OF THAT DISCIPLINE – SEE "SHEET INDEX".

C. THE COMPLETE SET OF DRAWINGS CONSIST OF ALL DRAWINGS LISTED BY THE "SHEET INDEX". THE WORK DESCRIBED IN ONE SHEET MAY BE REFERENCED AND MAY BE AFFECTED BY WORK DESCRIBED ON ANOTHER SHEET. THE WORK DESCRIBED IN ONE DISCIPLINE MAY BE REFERENCED AND AFFECTED BY WORK OF ANOTHER DISCIPLINE. PARTIAL SETS OF DRAWINGS ARE INCOMPLETE AND SHOULD NOT BE REDISTRIBUTED OR UTILIZED BY THE THE CONTRACTOR.

D. IT IS THE CONTRACTOR'S RESPONSIBILITY TO REVIEW AND COORDINATE THE WORK OF ALL SUBCONTRACTORS, TRADES AND SUPPLIERS WITH REQUIREMENTS OF THE CONTRACT DOCUMENTS BEFORE COMMENCING CONSTRUCTION, AND TO ASSURE THAT ALL PARTIES ARE AWARE OF ALL REQUIREMENTS, REGARDLESS OF WHERE THE REQUIREMENTS OCCUR IN THE CONTRACT DOCUMENTS, WHICH MIGHT AFFECT THE WORK OF THAT PARTY.

E. ALL ARCHITECTURAL DRAWINGS ESTABLISH AND COORDINATE THE FINISHED APPEARANCE AND LOCATION OF ALL EXPOSED ELEMENTS OF THE WORK, INCLUDING THAT WORK WHICH IS ILLUSTRATED PRIMARILY ON DRAWING OF OTHER DISCIPLINES, UNLESS OTHERWISE NOTED ON THE DRAWINGS.

F. THE ARCHITECTURAL FLOOR PLANS, REFLECTED CEILING PLANS, SECTIONS, AND ELEVATIONS SHOW THE LOCATION OF MANY-BUT NOT ALL – EXPOSED PARTS OF THE WORK. FOR ITEMS NOT LOCATED EXACTLY, APPLY THE RULES INDICATED BY THE DRAWING"TYPICAL MOUNTING HEIGHTS AND CONFIGURATION DIAGRAMS" TO DETERMINE THE EXACT LOCATION OF EACH EXPOSED PART OF THE WORK.

G. REFER TO THE STRUCTURAL, MECHANICAL, ELECTRICAL, PLUMBING, AND OTHER SPECIALTY ENGINEERING DRAWINGS FOR THE DETAILED DESIGN OF THE STRUCTURAL, MECHANICAL, ELECTRICAL AND PLUMBING SYSTEMS, OF WHICH PORTIONS MAY ALSO MAY BE SHOWN ON THE ARCHITECTURAL DRAWINGS.

H. ALL PARTS OF THE WORK – INCLUDING MATERIALS, METHODS, SERVICES, ETC – SHALL COMPLY WITH ALL APPLICABLE GOVERNING RULES, CODES, REGULATIONS, ORDINANCES, AND LAWS OF ALL FEDERAL, STATE DISTRICT, TERRITORIAL AND LOCAL GOVERNMENT AUTHORITIES HAVING JURISDICTION OVER THE DESIGN, CONSTRUCTION, AND OCCUPANCY OF THE PROJECT, WHETHER LISTED BY THE CONTRACT DOCUMENTS OR NOT.

I. NO PART OF THE CONTRACT DOCUMENTS SHALL BE CONSTRUED TO REQUIRE OR PERMIT WORK CONTRARY TO AN APPLICABLE GOVERNING RULE, CODE, REGULATION, ORDINANCE, OR LAW.

J. IF A CONFLICT EXISTS BETWEEN THE CONTRACT DOCUMENTS AND A REGULATORY REQUIREMENT, THE CONTRACTOR SHALL COMPLY WITH THE ONE ESTABLISHING THE MORE STRINGENT OR RESTRICTIVE REQUIREMENT:

J1. THE DRAWINGS AND SPECIFICATIONS MAY SET FORTH MORE DETAILED, MORE SPECIFIC, AND/OR MORE RESTRICTIVE REQUIREMENTS THAN THOSE SET FORTH BY THE APPLICABLE REGULATORY REQUIREMENTS, WHERE THE DRAWINGS AND SPECIFICATIONS PROVIDE MORE DETAILED, MORE SPECIFIC, AND/OR MORE RESTRICTIVE REQUIREMENTS, THE CONTRACTOR SHALL COMPLY WITH THOSE REQUIREMENTS.

J2. WHERE THE APPLICABLE REQUIREMENTS OF THE REFERENCED RULES, CODES, REGULATIONS, ORDINANCES, OR LAWS ARE MORE RESTRICTIVE THAN THAT SET FORTH BY THE DRAWINGS AND SPECIFICATION, THE CONTRACTOR SHALL COMPLY WITH ALL SUCH MORE RESTRICTIVE REQUIREMENTS. ALTHOUGH SUCH REQUIREMENTS MAY NOT BE ILLUSTRATED BY THE DRAWINGS AND SPECIFICATIONS.

K. APPLICABLE PORTIONS OF THE CODES, REGULATIONS, AND STANDARDS LISTED HERE ARE INCORPORATED BY REFERENCE INTO THE REQUIREMENTS OF THIS CONTRACT AND ESTABLISH MINIMUM REQUIREMENTS WITH WHICH THE WORK MUST COMPLY.

L. PROPRIETARY PRODUCTS OR ASSEMBLIES UTILIZED AS "BASIS OF DESIGN".

L1. ON OCCASION, THE DRAWINGS MAY REFER TO A SINGLE PROPRIETARY PRODUCT OR ASSEMBLY WHILE THE SPECIFICATIONS LIST TWO OR MORE ACCEPTABLE MANUFACTURERS AND/OR PRODUCTS. WHEN THIS OCCURS, THE PRODUCT OR ASSEMBLY ILLUSTRATED BY THE DRAWINGS IS THE "BASIS OF DESIGN" PRODUCT OR ASSEMBLY.

L2. THE DIMENSIONS, MOUNTING HEIGHTS, CLEARANCES, AND ACCESS REQUIREMENTS OF SPECIFIED PRODUCTS AND ASSEMBLIES OTHER THAN THE "BASIS OF DESIGN" MAY VARY FROM THAT SHOWN BY THE DRAWINGS.

L3. THE CONTRACTOR MAY UTILIZE ANY OTHER SPECIFIED PRODUCT OR ASSEMBLY IN LIEU OF THE "BASIS OF DESIGN" PRODUCT OR ASSEMBLY. HOWEVER, THE CONTRACTOR IS RESPONSIBLE (AT NO ADDITIONAL EXPENSE TO THE OWNER) FOR ALL COORDINATION AND REVISIONS TO DIMENSIONS AND/OR DETAILS NECESSARY TO ACHIEVE THE SAME FUNCTIONAL AND AESTHETIC DESIGN INTENT AS ILLUSTRATED BY THE "BASIS OF DESIGN" SHOWN BY THE CONTRACT DOCUMENTS.

M. THE CONTRACTOR SHALL NOT SCALE DRAWINGS. THE CONTRACTOR SHALL VERIFY ALL DIMENSIONS AND EXISTING CONDITIONS PRIOR TO THE START OF WORK AND SHALL NOTIFY THE OWNER'S REPRESENTATIVE OF ANY DISCREPANCIES PRIOR TO PROCEEDING WITH THE WORK.

APPLICABLE CODES AND STANDARDS

VA STANDARDS AND GUIDES:

PG-18-1	MASTER CONSTRUCTION SPECIFICATIONS, MASTER FORMAT 2004
PG-18-3	DESIGN AND CONSTRUCTION PROCEDURES, 2013
PG-18-4	STANDARD DETAILS AND CAD STANDARDS, 2009
PG-18-8	SEISMIC DESIGN HANDBOOK, 2013
PG-18-10	DESIGN MANUALS BY DISCIPLINE, VARIOUS DATES
PG-18-12	DESIGN GUIDES – SURGICAL SERVICE, 2005
PG-18-13	BARRIER FREE DESIGN GUIDE, DECEMBER 2011
PG-18-14	ROOM FINISHES, DOOR, AND HARDWARE SCHEDULES, 2010
PG-18-15	VOLUME C – MINOR AND NRM CONSTRUCTION PROGRAM, NOVEMBER 2008
VAFPDM	DEPARTMENT OF VETERANS AFFAIRS FIRE PROTECTION MANUAL, 6TH EDITION 2011

APPLICABLE CODES, STANDARDS AND PUBLICATIONS:

NFPA 1	FIRE CODE, 2015 EDITION
NFPA 101	LIFE SAFETY CODE, 2015 EDITION
NFPA 10	STANDARD FOR PORTABLE FIRE EXTINGUISHERS, 2013 EDITION
NFPA 13	STANDARD FOR INSTALLATION OF SPRINKLER SYSTEMS, 2013 EDITION
NFPA 14	STANDARD FOR INSTALLATION OF STANDPIPE AND HOSE SYSTEMS
NFPA 70	NATIONAL ELECTRIC CODE, 2014 EDITION
NFPA 72	NATIONAL FIRE ALARM AND SIGNALING CODE, 2013 EDITION
NFPA 80	STANDARD FOR FIRE DOORS AND OTHER OPENING PROTECTIVES
NFPA 90A	STANDARD FOR THE INSTALLATION OF AIR-CONDITIONING AND VENTILATING SYSTEMS, 2015 EDITION
NFPA 90B	STANDARD FOR THE INSTALLATION OF WARM AIR HEATING AND AIR-CONDITIONING SYSTEMS, 2015 EDITION
NFPA 91	STANDARD FOR EXHAUST SYSTEMS FOR AIR CONVEYING OF VAPORS, GASES, MISTS, AND NONCOMBUSTIBLE PARTICULATE SOLIDS, 2013 EDITION
NFPA 99	HEALTH CARE FACILITIES CODE, 2015 EDITION
NFPA 110	STANDARD FOR EMERGENCY AND STANDBY POWER SYSTEMS, 2013 EDITION
NFPA 111	STANDARD ON STORED ELECTRICAL ENERGY EMERGENCY AND STANDBY POWER SYSTEMS, 2013 EDITION
NFPA 220	STANDARD ON TYPES OF BUILDING CONSTRUCTION, 2015 EDITION
NFPA 251	STANDARD METHODS OF TESTS OF FIRE RESISTANCE OF BUILDING CONSTRUCTION AND MATERIALS, 2006 EDITION
NFPA 252	STANDARD METHODS OF FIRE TESTS OF DOOR ASSEMBLIES, 2008 EDITION

ARCHITECTURAL BARRIERS ACT ACCESSIBILITY STANDARDS (ABAAS), JULY 2003, AMENDED AUGUST 2005

INTERNATIONAL BUILDING CODE (IBC), 2015

NATIONAL STANDARD PLUMBING CODE, 2015

GREENING THE GOVERNMENT ORDERS 13123 AND 13148.

VENTILATION FOR ACCEPTABLE INDOOR AIR QUALITY - ASHRAE STANDARD 62.1-2007.

SAFETY STANDARDS FOR REFRIGERATION SYSTEMS - ASHRAE STANDARD 15-2004.

ASTM E84	STANDARD TEST METHODS FOR SURFACE BURNING CHARACTERISTICS OF BUILDING MATERIALS, 2010.
ASTM E119	STANDARD TEST METHODS FOR FIRE TESTS OF BUILDING CONSTRUCTION AND MATERIALS, 2010B.
ASTM E814	STANDARD TEST METHOD FOR FIRE TESTS OF THROUGH-PENETRATION FIRE STOPS, 2010.
ANSI/UL 555	STANDARD FOR FIRE DAMPERS, 2006, REVISED 2010
ANSI/UL 555S	STANDARD FOR SMOKE DAMPERS, 1999, REVISED 2010.
ANSI/UL 924 AND	STANDARD FOR EMERGENCY LIGHTING AND POWER EQUIPMENT, 2006, REVISED 2009.
ANSI/UL 1479	STANDARD FOR FIRE TESTS OF THROUGH-PENETRATION FIRE TESTS, 2003. REVISED 2010
ANSI/UL 1994	STANDARD FOR LUMINOUS EGRESS PATH MARKING SYSTEMS, 2004, REVISED 2010.

CODES ANALYSIS:

UNLESS OTHERWISE SPECIFIED, SPECIFIC REFERENCES TO CODES, REGULATIONS, STANDARDS, MANUFACTURERS' INSTRUCTIONS OR REQUIREMENTS OF REGULATORY AGENCIES, SHALL MEAN THE LATEST EDITION OF EACH IN AFFECT AT THE DATE OF PROJECT SUBMISSION UNO

PROJECT INFORMATION

PROJECT DESCRIPTION

THIS PROJECT IS DESIGNED TO RENOVATE A PORTION OF THE OPERATING SUITE ON THIRD FLOOR OF THE MAIN HOSPITAL AT VA LOMA LINDA HEALTHCARE SYSTEM. THE RENOVATION WILL INCLUDE RELOCATION OF OPERATING ROOM #8 (LEAD SHIELDED), EQUIPMENT STORAGE TO HOUSE THE DA VINCI ROBOTS, STAFF LOCKER ROOMS, BREAKROOM, MEDICATION ROOM AND ANESTHESIA WORKROOMS.

PROJECT SIZE

APPROXIMATE 3,744 SF (GROSS)

PROJECT LOCATION

JERRY L. PETTIS MEMORIAL VETERAN'S AFFAIRS (VA) MEDICAL CENTER
LOMA LINDA HEALTHCARE SYSTEM, LOMA LINDA , CA 92357

THIS BUILDING IS FULLY SPRINKLERED

PROJECT VICINITY MAP

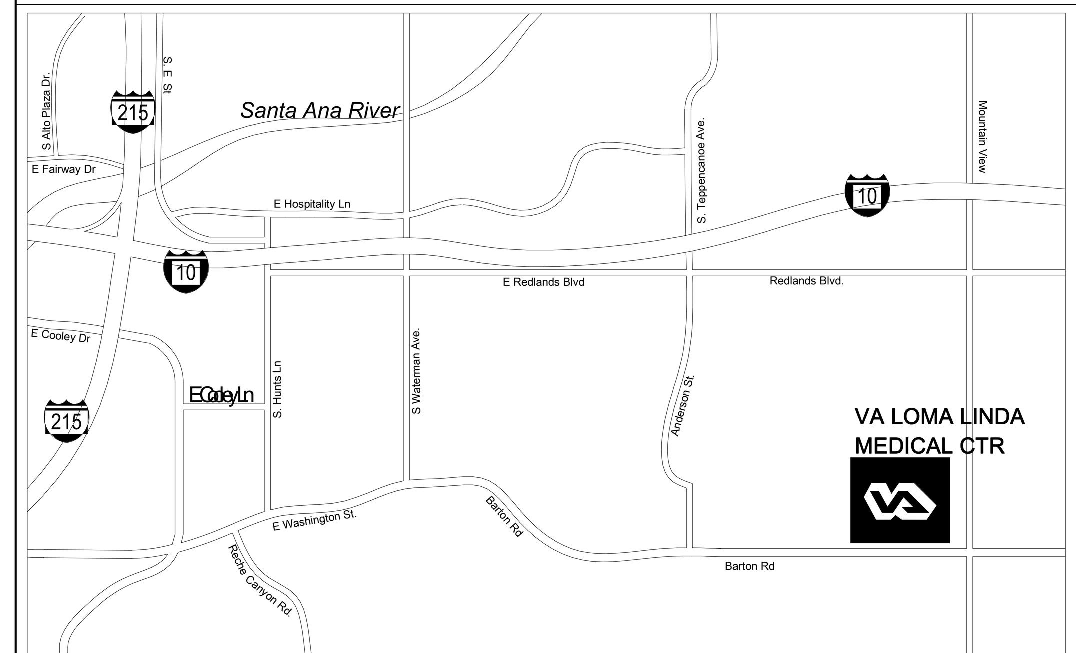

CAMPUS MAP

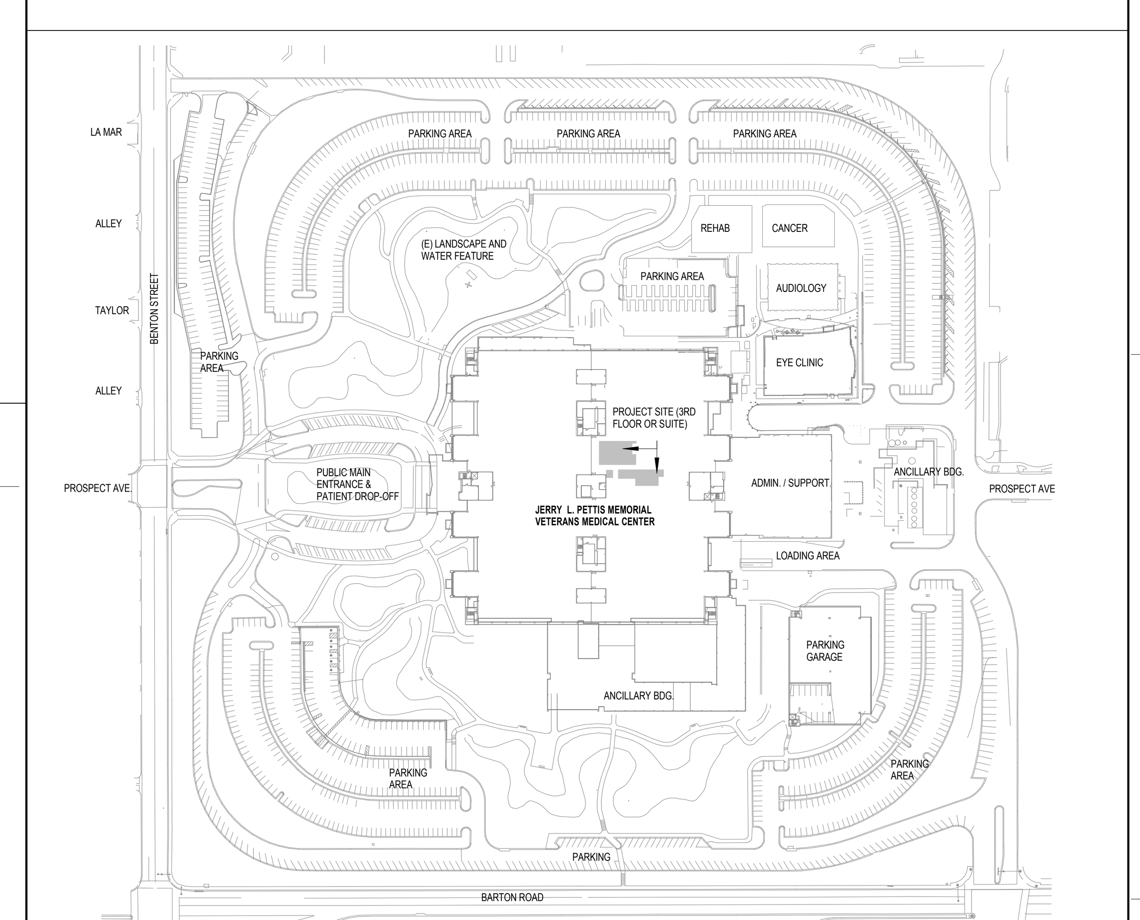

VIEW NUMBERING MODULAR LAYOUT

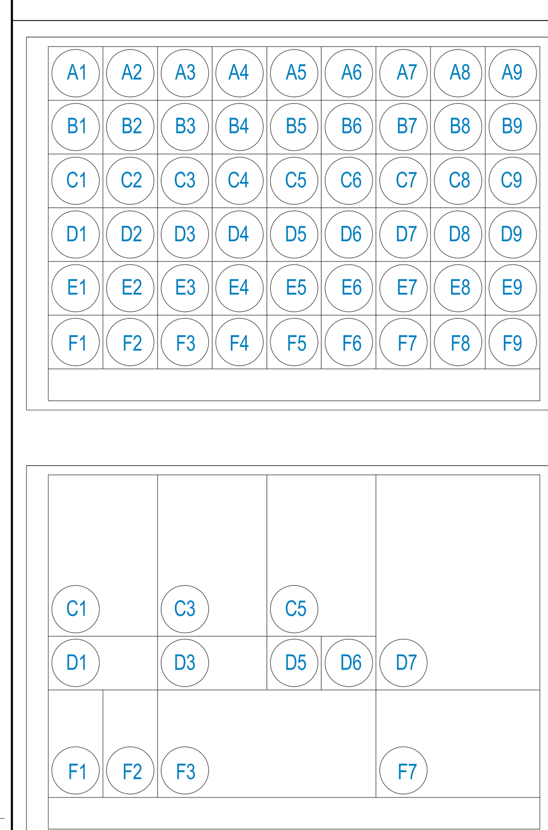

VIEW NUMBERING LAYOUT

VIEWS ARE NUMBERED ACCORDING TO THEIR LOCATION ON EACH SHEET AND ARE NOT NUMBERED CONSECUTIVELY. EACH MODULE MAINTAINS THE NUMBER ASSOCIATED WITH IT

THIS SYSTEM CAN BE APPLIED TO ANY DRAWING THAT CONTAINS MULTIPLE IMAGES. THE IMAGES ARE NUMBERED ACCORDING TO THE MODULE SYSTEM SHOWN ILLUSTRATED TO THE LEFT

EACH VIEW MAY OCCUPY ONE OR MORE WHOLE MODULES. THE VIEW MODULE IS USED TO ESTABLISH THE IDENTIFYING LABEL FOR EACH DETAIL NOT TO LIMIT THE SIZE OF THE DETAIL

VIEW NUMBERING EXAMPLE

THE NUMBER OF THE MODULE WHICH OCCURS IN THE LOWER LEFT CORNER OF A SINGLE MODULE OR SEVERAL MODULES GROUPED TOGETHER WILL DEFINE THE FINAL VIEW NUMBER AS SHOWN IN THE ILLUSTRATION TO THE LEFT. ALTHOUGH THE MODULE NUMBERS OCCUR IN CONSECUTIVE ORDER. NOT ALL NUMBERS ARE NECESSARILY USED ON EACH SHEET

CONSTRUCTION DOCUMENTS
FULLY SPRINKLERED

No.	Description	Date
1	SCHEMATIC DESIGN (SD)	10/20/2015
2	DESIGN DEVELOPMENT (DD)	01/18/2016
3	CONSTRUCTION DOCUMENTS (CD)	03/30/2016

CONSULTANTS:

(SEE PROJECT TEAM DIRECTORY ON GI000 COVER SHEET)

Seals and Signatures

ARCHITECTS/ENGINEERS:

LEO A DALY
PLANNING ARCHITECTURE ENGINEERING INTERIORS
550 South Hope Street, 27th Floor
Los Angeles, California 90071, USA
213-629-0100 F213-629-0070
EST. 1915

Drawing Title: **PROJECT INFORMATION AND CODE ANALYSIS**

Approved: Project Director

Project Title: **CONSTRUCT OPERATING ROOM #8**

Location: 11201 BENTON STREET, LOMA LINDA, CA 92357

Date: 03/30/2016 | Checked: MS | Drawn: TV

Project Number: 605-14-640

Building Number: 1

Drawing Number: **GI002**

Office of Construction and Facilities Management

Department of Veterans Affairs

VA FORM 08-6231

3/25/2016 3:27:35 PM C:\Users\mbsaguilayan\Documents\Autodesk\Revit 2013 Projects\046-10037-000_Central_mbsaguilayan.rvt

STANDARD ABBREVIATIONS

A

A LABEL	CLASS A DOOR
A/C	AIR CONDITION
A/C UNIT	AIR CONDITIONING UNIT
A/E	ARCHITECT/ENGINEER
AAMA	AMERICAN ARCHITECTURAL MANUFACTURERS ASSOCIATION
AB	ANCHOR BOLT
ABC	AGGREGATE BASE COURSE
AC	ASBESTOS CEMENT OR ASPHALTIC CONCRETE
ACI	AMERICAN CONCRETE INSTITUTE
ACS DR	ACCESS DOOR
ACS FLR	ACCESS FLOOR
ACS PNL	ACCESS PANEL
ACST	ACOUSTIC
ACT	ACOUSTICAL CEILING TILE
AD	AREA DRAIN
ADA	AMERICANS WITH DISABILITIES ACT
ADC	AUTOMATIC DOOR CLOSER
ADDL	ADDITIONAL
ADDN	ADDITION
ADH	ADHESIVE
ADJ	ADJACENT, ADJOINING, OR ADJUSTABLE
ADMIN	ADMINISTRATION
ADB	AUTOMATIC DOOR BOTTOM
AFC	ABOVE FINISHED COUNTER
AFF	ABOVE FINISHED FLOOR
AFG	ABOVE FINISHED GRADE
AFS	ABOVE FINISHED SLAB
AGA	AMERICAN GAS ASSOCIATION
AGC	ASSOCIATED GENERAL CONTRACTORS
AGGR	AGGREGATE
AHJ	AUTHORITY HAVING JURISDICTION
AHR	ANCHOR
AHU	AIR HANDLING UNIT
AIA	AMERICAN INSTITUTE OF ARCHITECTS
AISC	AMERICAN INSTITUTE OF STEEL CONSTRUCTION
ALT	ALTERNATE
ALT NO	ALTERNATE NUMBER
ALUM	ALUMINUM
AMP	AMPERE
AMT	AMOUNT
ANOD	ANODIZE
ANSI	AMERICAN NATIONAL STANDARDS INSTITUTE
ANT	ANTENNA
APA	AMERICAN PLYWOOD ASSOCIATION
APPD	APPROVED
APPROX	APPROXIMATE
APT	APARTMENT
AR	AS REQUIRED
ARCH	ARCHITECT
ASB	ASBESTOS
ASI	ARCHITECT'S SUPPLEMENTAL INSTRUCTION
ASKLR	AUTOMATIC SPRINKLER
ASPH	ASPHALT
ASSN	ASSOCIATION
ASTM	AMERICAN SOCIETY FOR TESTING AND MATERIALS
ATCH	ATTACHMENT
ATM	AUTOMATIC TELLER MACHINE
ATS	AUTOMATIC TRANSFER SWITCH
AUTO	AUTOMATIC
AUX	AUXILIARY
AV	AUDIO VISUAL
AVE	AVENUE
AVG	AVERAGE
AW	ACID WASTE
AWI	ARCHITECTURAL WOODWORKING INSTITUTE
AWPA	AMERICAN WOOD PRESERVERS' ASSOCIATION
AWS	AMERICAN WELDING SOCIETY
AWT	ACOUSTICAL WALL TREATMENT

B

B LABEL	CLASS B DOOR
B PL	BASE PLATE
BALC	BALCONY
BAT	BATTEN
BB	BULLETIN BOARD
BD	BOARD
BD FT	BOARD FEET (FOOT)
BFF	BELOW FINISHED FLOOR
BEV	BEVEL
BHMA	BUILDER'S HARDWARE MANUFACTURER'S ASSOCIATION
BI FLD DR	BIFOLDING DOORS
BITUM	BITUMINOUS
BKG	BACKING
BLD	BUILD
BLDG	BUILDING
BLKT	BLANKET
BLVD	BOULEVARD
BM	BEAM OR BENCHMARK
BOT	BOTTOM
BR	BEDROOM
BRCG	BRACING
BRDG	BRIDGING
BRDG JST	BRIDGING JOIST
BRG	BEARING
BRG PL	BEARING PLATE
BRKT	BRACKET
BRZ	BRONZE
BSMT	BASEMENT
BTWN	BETWEEN
BU	BUSHEL
BUR	BUILT-UP ROOFING

C

C	CELSIUS CHANNEL
C	CHANNEL CELSIUS
C CONC	CAST CONCRETE
C LABEL	CLASS C DOOR
C TO C	CENTER TO CENTER
CAB	CABINET
CAC	CEILING ATTENUATION CLASS

C (CONT'D)

CB	CATCH BASIN OR CORNER BEAD
CBB	CEMENTITIOUS (BACKER) BOARD
CC	CUBIC CENTIMETER
CCTV	CLOSED CIRCUIT TELEVISION
CCW	COUNTERCLOCKWISE
CD	CONSTRUCTION DOCUMENTS OR CONTRACT DOCUMENTS
CEM	CEMENT
CEM PLAS	CEMENT PLASTER
CER	CERAMIC
CF	CONTRACTOR FURNISHED
CF/CI	CONTRACTOR FURNISHED / CONTRACTOR INSTALLED
CF/OI	CONTRACTOR FURNISHED / OWNER INSTALLED
CFLG	COUNTERFLASHING
CFM	CUBIC FEET PER MINUTE
CFMF	COLD-FORMED METAL FRAMING
CFS	CUBIC FEET PER SECOND
CG	CENTER OF GRAVITY OR CORNER GUARD
CGSFU	CERAMIC GLAZED STRUCTURAL FACING UNITS
CH BD	CHALKBOARD
CHEM	CHEMICAL
CHFR	CHAMFER
CHK	CHECK
CI	CAST IRON
CIP	CAST-IN-PLACE
CIR	CIRCLE
CIRC	CIRCULAR
CJ	CONSTRUCTION JOINT OR CONTROL JOINT
CL	CENTER LINE
CLDG	CLADDING
CLG	CEILING
CLG HT	CEILING HEIGHT
CLR	CLEAR
cm^2	SQUARE CENTIMETER
cm^3	CUBIC CENTIMETER
CM	CONSTRUCTION MANAGEMENT
CMU	CONCRETE MASONRY UNIT
CNR	CORNER
CNTR	COUNTER
CO	CARBON MONOXIDE, CERTIFICATE OF OCCUPANCY, CLEANOUT, OR COMPANY
CO2	CARBON DIOXIDE
COL	COLUMN
COM	COMMON
COMB	COMBINATION, COMBINED
COMM	COMMUNICATION
COMP	COMPONENT
CONC	CONCRETE
CONC FLR	CONCRETE FLOOR
COND	CONDENSER OR CONDITION
CONF	CONFERENCE
CONN	CONNECT
CONSTR	CONSTRUCTION
CONT	CONTINUE
CONTR	CONTRACTOR
COORD	COORDINATE
CORR	CORRIDOR
CPM	CRITICAL PATH METHOD
CPRS	COMPRESSIBLE
CPT	CARPET
CRS	COLD ROLLED STEEL
CRSI	CONCRETE REINFORCING STEEL INSTITUTE
CSB	CONCRETE SPLASH BLOCK
CSG	CASING
CSI	CONSTRUCTION SPECIFICATIONS INSTITUTE
CSK	COUNTER SUNK
CSMT	CASEMENT
CSWK	CASEWORK
CT	CERAMIC TILE
CTB	CERAMIC TILE BASE
CTF	CERAMIC TILE FLOOR
CTG	COATING
CTR	CENTER CONTOUR
CTRL	CONTROL
CTV	CABLE TELEVISION
CU	COPPER C
CU FT	CUBIC FEET
CU IN	CUBIC INCH
CU YD	CUBIC YARD
CURT	CURTAIN
CYL	CYLINDER
CYL L	CYLINDER LOCK

D

D	DEPTH OR PENNY (NAIL)
D LABEL	CLASS D DOOR
DAT	DATUM
DB	DECIBEL
DBL	DOUBLE
DBL GLZ	DOUBLE GLAZE
DC	DIRECT CURRENT
DEG	DEGREE
DEL	DELETE
DEMO	DEMOLITION
DEPT	DEPARTMENT
DET	DETAIL
DF	DRINKING FOUNTAIN
DIA	DIAMETER
DIAG	DIAGONAL DIAGRAM
DIAG	DIAGRAM DIAGONAL
DIFF	DIFFERENCE OR DIFFUSER
DIM	DIMENSION
DIR	DIRECTION
DISP	DISPENSER
DIST	DISTANCE
DIV	DIVIDE OR DIVISION
DL	DEAD LOAD
DOC	DOCUMENT
DOUG FIR	DOUGLAS FIR
DOZ	DOZEN
DR	DOOR, DRAIN, DRESSING ROOM, OR DRIVE
DR CL	DOOR CLOSER

D (CONT'D)

DR FR	DOOR FRAME
DR OPNG	DOOR OPENING
DS	DOWNSPOUT
DSGN	DESIGN
DW	DISHWASHER
DWG	DRAWING
DWTR	DUMBWAITER

E

E	EAST
E LABEL	CLASS E DOOR
EA	EACH
EFF	EFFICIENCY
EFS	EXTERIOR FINISH SYSTEM
EIFS SYSTEM	EXTERIOR INSULATION AND FINISH
EJ	EXPANSION JOINT
EL	ELEVATION
ELAST	ELASTOMERIC
ELEC	ELECTRIC
ELEC DR OP	ELECTRIC DOOR OPENER
ELEV	ELEVATOR
EMER	EMERGENCY
EMER SHR	EMERGENCY SHOWER
ENCL	ENCLOSURE
ENGR	ENGINEER
ENVIR	ENVIRONMENT
EPA	ENVIRONMENTAL PROTECTION AGENCY
EPDM	ETHYLENE PROPYLENE DIENE MONOMER
EPO	EMERGENCY POWER OFF
EPS	EXPANDED POLYSTYRENE BOARD (INSULATION)
EQ	EQUAL
EQL SP	EQUALLY SPACED
EQUIP	EQUIPMENT
EQUIV	EQUIVALENT
ERD	EXISTING ROOF DRAIN
ESC	ESCAPE OR ESCUTCHEON
ESCAL	ESCALATOR
ESMT	EASEMENT
ESP	ESPECIALLY
EST	ESTIMATE
ETC	AND SO FORTH OR ET CETERA
EW	EACH WAY
EWC	ELECTRIC WATER COOLER
EWS	EYE WASH STATION
EXH	EXHAUST
EXIST	EXISTING
EXP	EXPANSION OR EXPOSED
EXP BT	EXPANSION BOLT
EXST GR	EXISTING GRADE
EXT	EXTERIOR, EXTERNAL, OR EXTINGUISHER
EXT GR	EXTERIOR GRADE

F

F	FAHRENHEIT OR FEMALE
FA	FIRE ALARM
FAB	FABRIC
FAC	FACTOR
FACIL	FACILITY
FAS	FASCIA
FAS BD	FASCIA BOARD
FCO	FLOOR CLEANOUT
FCTY	FACTORY
FD	FLOOR DRAIN \
FDC	FIRE DEPARTMENT CONNECTION
FDTN	FOUNDATION
FE	FIRE EXTINGUISHER
FEC	FIRE EXTINGUISHER CABINET
FF	FINISH FACE
FF EL	FINISH FLOOR ELEVATION
FF&E	FURNITURE, FIXTURE, AND EQUIPMENT
FH	FLAT HEAD OR FLAT HEAD SCREWS
FHC	FIRE HOSE CABINET
FHMS	FLAT HEAD MACHINE SCREW
FHP	FULL HEIGHT PARTITION
FHWS	FLAT HEAD WOOD SCREW
FIG	FIGURE
FIL	FILLET
FIN	FINISH
FIN FLR	FINISH FLOOR
FIN GR	FINISH GRADE
FIN WD	FINISH WOOD
FIXT	FIXTURE
FL	FLOORLINE
FLASH	FLASHING
FLDG	FOLDING
FLEX	FLEXIBLE
FLG	FLOORING
FLR	FLOOR
FLR FIN	FLOOR FINISH
FLR SK	FLOOR SINK
FLUOR	FLUORESCENT
FLUOR FIX	FLUORESCENT FIXTURE
FM	FACTORY MUTUAL
FM-G	FACTORY MUTUAL GLOBAL
FO	FINISHED OPENING
FOC	FACE OF CONCRETE OR FACE OF CURB
FOF	FACE OF FINISH
FOM	FACE OF MASONRY
FOS	FACE OF SLAB OR FACE OF STUD
FOUNT	FOUNTAIN
FOW	FACE OF WALL
FP	FIRE PROTECTION OR FIREPROOF
FPM	FEET PER MINUTE
FPS	FEET PER SECOND
FR	FIRE RATING, FIRE RESISTANT, OR FRAME
FR SNK	FLUSHING RIM SINK
FREQ	FREQUENCY
FRMG	FRAMING
FRP	FIBER REINFORCED POLYESTER OR FIBERGLASS REINFORCED PLASTIC
FRZ	FREEZER
FS	FEDERAL SPECIFICATION
FSTNR	FASTENER

F (CONT'D)

FT	FEET OR FOOT
FTG	FOOTING
FURG	FURRING
FURN	FURNISH OR FURNITURE
FUT	FUTURE
FWC	FABRIC WALLCOVERING

G

GA	GAGE OR GYPSUM ASSOCIATION
GAL	GALLON
GALV	GALVANIC OR GALVANIZED
GALV STL	GALVANIZED STEEL
GB	GRAB BAR
GC	GENERAL CONTRACTOR
GD	GUARD
GDR	GUARD RAIL
GEN	GENERAL OR GENERATOR
GFRC	GLASS-FIBER-REINFORCED CONCRETE
GFRG	GLASS-FIBER-REINFORCED GYPSUM
GFRP	GLASS-FIBER-REINFORCED PLASTIC
GI	GALVANIZED IRON
GL	GLASS
GL BLK	GLASS BLOCK
GLU LAM	GLUED LAMINATED WOOD
GR FL	GROUND FLOOR
GRAN	GRANITE
GRTG	GRATING
GSB	GYPSUM SHEATHING BOARD
GSM	GALVANIZED SHEET METAL
GSU	GLAZED STRUCTURAL UNIT
GT	GROUT
GUAR	GUARANTEE
GUT	GUTTER
GYP	GYPSUM
GYP BD	GYPSUM BOARD
GYP PLAS	GYPSUM PLASTER

H

H	HIGH
H PLAM	HIGH PRESSURE PLASTIC LAMINATE
HAZ MAT	HAZARDOUS MATERIALS
HB	HOSE BIBB
HC	HOLLOW CORE
HCWD	HOLLOW CORE WOOD DOOR
HDBD	HARDBOARD
HDNR	HARDENER
HDO	HIGH DENSITY OVERLAY
HDR	HEADER
HDW	HARDWARE
HDWD	HARDWOOD
HEPA (FILTER)	HIGH EFFICIENCY PARTICULATE AIR
HEX	HEXAGON
HF	HIGH FREQUENCY
HGR	HANGER
HM	HECTOMETER
HM	HOLLOW METAL
HMD	HOLLOW METAL DOOR
HMDF	HOLLOW METAL DOOR AND FRAME
HMF	HOLLOW METAL FRAME
HNDRL	HANDRAIL
HO	HOLD OPEN
HORIZ	HORIZONTAL
HOSP	HOSPITAL
HP	HIGH PRESSURE OR HORSEPOWER
HQ	HEADQUARTERS
HS	HEAT-STRENGTHENED (GLASS) OR HIGH STRENGTH
HSE	HOUSE
HSKPG	HOUSEKEEPING
HST	HOIST
HT	HEIGHT
HVAC	HEATING, VENTILATING, AND AIR CONDITIONING
HVY	HEAVY
HW	HOT WATER
HYD	HYDRANT
HYDR	HYDRAULIC

I

I	INTERSTATE (HIGHWAY) OR MOMENT OF INERTIA
IAQ	INDOOR AIR QUALITY
IBC	INTERNATIONAL BUILDING CODE
ID	IDENTIFICATION, INSIDE DIAMETER, OR INTERIOR DESIGN
ID NO	IDENTIFICATION NUMBER
ILLUM	ILLUMINATION
INCL	INCLUDED
IND	INDEPENDENT OR INDUSTRIAL
INFO	INFORMATION
INSUL	INSULATION
INT	INTERIOR
INTERCOM	INTERCOMMUNICATION
INTL	INTERNATIONAL
IRMA	INVERTED ROOF MEMBRANE ASSEMBLY
IWH	INSTANTANEOUS WATER HEATER

J

JAN	JANITOR
J-BOX	JUNCTION BOX

K

KD	KILN DRIED OR KNOCKED DOWN
KIT	KITCHEN
KO	KNOCKOUT
KPL	KICKPLATE

L

L	ANGLE
LAB	LABORATORY
LAD	LADDER
LAM	LAMINATE
LAM GL	LAMINATED GLASS
LAU	LAUNDRY

L (CONT'D)

LAV	LAVATORY
LBR	LUMBER
LBS	POUND
LD BRG	LOAD-BEARING
LDR	LEADER
LED	LIGHT EMITTING DIODE
LF	LINEAR FEET (FOOT)
LH	LEFT HAND
LHR	LEFT HAND REVERSE
LHR	LEFT HAND REVERSE LATENT HEAT RATIO
LIB	LIBRARY
LIN	LINEAR
LINO	LINOLEUM
LIQ	LIQUID
LKR	LOCKER
LKR RM	LOCKER ROOM
LKWASH	LOCKWASHER
LL	LEAD LINED
LLH	LONG LEG HORIZONTAL
LLV	LONG LEG VERTICAL
LMST	LIMESTONE
LNDSCP	LANDSCAPE
LR	LIVING ROOM
LRG	LARGE
LRV	LOUVERED ROOF VENT
LS	LUMP SUM
LT	LIGHT
LT GA	LIGHT GAGE
LT WT	LIGHTWEIGHT
LTG	LIGHTING
LTNG	LIGHTNING
LVD	LOUVERED
LVR	LOUVER
LWC	LIGHTWEIGHT CONCRETE
LWIC	LIGHTWEIGHT INSULATING CONCRETE
LYR	LAYER

M

MACH	MACHINE
MACH RM	MACHINE ROOM
MAINT	MAINTENANCE
MAN	MANUAL
MATL	MATERIAL
MATV	MASTER ANTENNA TELEVISION SYSTEM
MAX	MAXIMUM
MB	MACHINE BOLT
MCB	METAL CORNER BEAD
MD	DECK
ME	MECHANICAL ENGINEER
MEAS	MEASURE
MECH	MECHANICAL
MECH RM	MECHANICAL ROOM
MED	MEDIUM
MED	MEDIUM MEDICAL
MEK	METHYL ETHYL KETONE
MEL	MELAMINE
MEMB	MEMBRANE
MEMO	MEMORANDUM
MEZZ	MEZZANINE
MF	MILL FINISH
MFD	MANUFACTURED
MFG	MANUFACTURING
MFR	MANUFACTURER
MFR REC	MANUFACTURER'S RECOMMENDATION
MGT	MANAGEMENT
MH	MANHOLE
MIC	MICROPHONE
MID	MIDDLE
MIL STD	MILITARY STANDARD
MIN	MINIMUM MINUTE
MIN	MINUTE MINIMUM
MIRR	MIRROR
MISC	MISCELLANEOUS
MIT	MITER
MKR	MARKER
ML	METAL LATH
MLDG	MOLDING (MOULDING)
MLWK	MILLWORK
mm	MILLIMETER
MO OPERATED	MASONRY OPENING OR MOTOR
MOD	MODEL, MODIFY OR MODULE
MOD BIT	MODIFIED BITUMEN
MON	MONITOR
MOPR	MOP RACK
MR	MOISTURE RESISTANT
MS	MACHINE SCREW OR MOP SINK
MTD	MOUNTED
MTG	MOUNTING
MTL	METAL
MULL	MULLION
MW	MICROWAVE
MWP	MEMBRANE WATERPROOFING

N

N	NORTH
NA	NOT APPLICABLE
NAAMM	NATIONAL ASSOCIATION OF ARCHITECTURAL METAL MANUFACTURERS
NAT	NATURAL
NATL	NATIONAL
NC	NOISE CRITERIA
NCOMBL	NONCOMBUSTIBLE
NEC	NATIONAL ELECTRICAL CODE
NEG	NEGATIVE
NEMA	NATIONAL ELECTRICAL MANUFACTURERS ASSOCIATION
NEUT	NEUTRAL
NFC	NATIONAL FIRE CODE
NFPA	NATIONAL FIRE PROTECTION ASSOCIATION
NIC	NOT IN CONTRACT
NO	NUMBER
NOM	NOMINAL
NR	NOISE REDUCTION
NRC	NOISE REDUCTION COEFFICIENT
NRCA	NATIONAL ROOFING CONTRACTORS ASSOCIATION

N (CONT'D)

NRP	NONREMOVABLE
NS	NARROW STILE
NUM	NUMERAL

O

O/O	OUT TO OUT
O	OXYGEN
OA	OUTSIDE AIR OR OVERALL
OC	ON CENTER
OCC	OCCUPY
OCT	OCTAGON
OD DIMENSION	OUTSIDE DIAMETER OUTSIDE
OD DIAMETER	OUTSIDE DIMENSION OUTSIDE
OF/CI	OWNER FURNISHED/CONTRACTOR INSTALLED
OFD	OVERFLOW DRAIN
OFF	OFFICE
OF/OI	OWNER FURNISHED/OWNER INSTALLED
OH	OVERHANG
OH DR	OVERHEAD (COILING) DOOR
OPH	OPPOSITE HAND
OPNG	OPENING
OPP	OPPOSITE
OPR	OPERABLE
OPT	OPTIONAL
OR	OPERATING ROOM OR OUTSIDE RADIUS
ORD	ORDNANCE OR OVERFLOW ROOF DRAIN
ORG	ORGANIC
ORIG	ORIGINAL
ORN	ORNAMENTAL
OSHA	OCCUPATIONAL SAFETY AND HEALTH ADMINISTRATION
OUT	OUTLET
OZ	OUNCE

P

PAR	PARALLEL OR PARAPET
PARA	PARAGRAPH
PART	PARTIAL
PAT	PATTERN
PB	PUSHBUTTON
PBD	PARTICLEBOARD
PC	PIECE, POLYCARBONATE OR PORTLAND CEMENT
PCA	PORTLAND CEMENT ASSOCIATION
PCC	PRECAST CONCRETE
PCCP	CONCRETE PAVEMENT
PCD	PAPER CUP DISPENSER
PCF	POUNDS PER CUBIC FOOT
PCP	PORTLAND CEMENT PLASTER
PED	PEDESTAL
PEN	PENETRATE
PEND	PENDANT
PERF	PERFORATED
PERIM	PERIMETER
PERP	PERPENDICULAR
PGBD	PEGBOARD
PHAR	PHARMACY
PHOTO	PHOTOGRAPH
PHS	PHILLIPS HEAD SCREW
PKG	PACKAGE
PL	PROPERTY LINE
PL GL	PLATE GLASS
PLAM	PLASTIC LAMINATE
PLAS	PLASTER OR PLASTIC
PLBG	PLUMBING
PLYWD	PLYWOOD
PMTL	PAINTED METAL
PNEU	PNEUMATIC
PNL	PANEL
PO	POST OFFICE PURCHASE ORDER
PO	PURCHASE ORDER POST OFFICE
POLY	POLYETHYLENE (PLASTIC)
PR	PAIR
PRCST	PRECAST
PREFAB	REFABRICATE
PREFIN	PREFINISH
PRELIM	PRELIMINARY
PREP	PREPARATION
PRESS	PRESSURE
PREV	PREVIOUS
PRKG	PARKING
PRMLD	PREMOLDED
PROJ	PROJECT
PROP	PROPERTY
PSF	POUNDS PER SQUARE FOOT
PSI	POUNDS PER SQUARE INCH
PT	PAINT, PNEUMATIC TUBE, OR PRESSURE TREATED
PTD	PAPER TOWEL DISPENSER
PTN	PARTITION
PVC	POLYVINYL CHLORIDE (PLASTIC)
PVG	PAVING
PWR	POWER

Q

QA	QUALITY ASSURANCE
QC	QUALITY CONTROL
QRY	QUARRY
QT	QUARRY TILE
QTB	QUARRY TILE BASE
QTF	QUARRY TILE FLOOR
QTR	QUARTER
QTY	QUANTITY
QUAD	QUADRANT
QUAL	QUALITY

R

R	RADIUS OR RISER
RA	RETURN AIR
RAD	RADIATOR

R (CONT'D)

RB	RESILIENT BASE OR RUBBER BASE
RB HK	ROBE HOOK
RBM	REINFORCED BRICK MASONRY
RBR	RUBBER
RC	REMOTE CONTROL
RCP	REFLECTED CEILING PLAN
RCVR	RECEIVER
RD	ROAD OR ROOF DRAIN
REC	RECESSED
RECD	RECEIVED
RECPT	RECEPTACLE
RECT	RECTANGLE
REF	REFERENCE OR REFRIGERATOR
REFR	REFRACTORY REFRIGERATION
REFR	REFRIGERATION REFRACTORY
REG	REGISTER
REINF	REINFORCE
REP	REPAIR
REPL	REPLACE
REQ	REQUIRE
REQD	REQUIRED
RESIL	RESILIENT
RET	RETURN
REV	REVISION
RF	RADIO FREQUENCY
RFG	ROOFING
RFI	REQUEST FOR INFORMATION
RFP	REQUEST FOR PROPOSAL
RH	RIGHT HAND
RHMS	ROUND HEAD MACHINE SCREW
RHR	RIGHT HAND REVERSE
RHWS	ROUND HEAD WOOD SCREW
RL	ROOF LEADER
RLG	RAILING
RM	ROOM
RND	ROUND
RO	ROUGH OPENING
ROW	RIGHT OF WAY
RPM	REVOLUTIONS PER MINUTE
RS	ROUGH SAWN
RT	RIGHT
RV	ROOF VENT
RVS	REVERSE
RWD	REDWOOD
RWL	RAIN WATER LEADER

S

SA	SUPPLY AIR
SALV	SALVAGE
SAMP	SAMPLE
SAN	SANITARY
SAT	SUSPENDED ACOUSTICAL TILE
SATC	SUSPENDED ACOUSTICAL TILE CEILING
SB	SPLASH BLOCK
SBS	STYRENE BUTADIEN STYRENE
SBSTR	SUBSTRATE
SC	SHADING COEFFICIENT OR SOLID CORE
SCH	SCHOOL
SCHED	SCHEDULE
SCHEM	SCHEMATIC
SCP	SCUPPER
SCRN	SCREEN
SCT	STRUCTURAL CLAY TILE
SCWD	SOLID CORE WOOD DOOR
SD	SHOP DRAWINGS, SMOKE DETECTOR,
OR	SOAP DISPENSER;
SDG	SIDING
SECT	SECTION
SEG	SEGMENT
SEL	SELECT
SEP	SEPARATE
SF	SQUARE FOOT (FEET)
SFTWD	SOFTWOOD
SGD	SLIDING GLASS DOOR
SGL	SINGLE
SHR	SHOWER
SHR HD	SHOWER HEAD
SHRD	SHOWER DRAIN
SHT	SHEET
SHT MTL FLASH	SHEET METAL (FLASHING)
SHTHG	SHEATHING
SHV	SHELVING
SIM	SIMILAR
SJ	SCORED JOINT
SJI	STEEL JOIST INSTITUTE
SK	SKETCH
SKLT	SKYLIGHT
SLD WDW	HORIZONTAL SLIDING WINDOW
SLDG	SLIDING
SLNT	SEALANT
SM	SHEET METAL
SMK	SMOKE
SND	SANITARY NAPKIN DISPENSER
SND INS	SOUND INSULATION
SNDU	SANITARY NAPKIN DISPOSAL UNIT
SPEC	SPECIFICATION
SPKLR	SPRINKLER
SPKR	SPEAKER
SPLY	SUPPLY
SQ	SQUARE
SQ IN	SQUARE INCH
SQ YD	SQUARE YARD
SS	SANITARY SEWER OR SERVICE SINK
SST	STAINLESS STEEL
ST	STAIRS OR STREET
STC	SOUND TRANSMISSION CLASS
STD	STANDARD
STIF	STIFFENER
STL JST	STEEL JOIST
STL LNTL	STEEL LINTEL
STL PL	STEEL PLATE
STL RF DK	STEEL ROOF DECK
STL TB	STEEL TUBE
STL TR	STEEL TRUSS
STNLS	STAINLESS
STOR	STORAGE
STR	STRINGERS
STRUCT	STRUCTURAL
STRUCT STL	STRUCTURAL STEEL

S (CONT'D)

SUB	SUBSTITUTE
SURF	SURFACE
SUSP	SUSPEND
SUSP CLG	SUSPENDED CEILING
SV	SHEET VINYL
SW	SWITCH
SWDR	SWING DOOR
SYM	SYMBOL
SYNTH	SYNTHETIC
SYS	SYSTEM

T

T	TREAD
T&G	TONGUE AND GROOVE
T&M	TIME AND MATERIALS
TB	THROUGH BOLT OR TOWEL BAR
TCA	TILE COUNCIL OF AMERICA
TCP	TELEPHONE CONTROL PANEL TEMPERATURE CONTROL PANEL; TRAFFIC CONTROL PLAN
TD	TOWEL DISPENSER
TECH	TECHNICAL
TEL	TELEPHONE
TEMP	TEMPERATURE OR TEMPORARY
TER	TERRAZZO
THD	THREAD
THERM	THERMAL
THK	THICKNESS
THRES	THRESHOLD
THRU	THROUGH
THRUOUT	THROUGHOUT
TK BD	TACKBOARD
TMPD	TEMPERED
TMPD GL	TEMPERED GLASS
TN	TRUE NORTH
TO	TOP OF ___
TO FDN	TOP OF FOUNDATION
TOB	TOP OF BEAM
TOM	TOP OF MASONRY
TOP	TOP OF PARAPET
TOS	TOP OF STEEL
TOW	TOP OF WALL
TPD	TOILET PAPER DISPENSER
TPH	TOILET PAPER HOLDER
TR	TOWEL RACK
TRANS	TRANSOM
TRANS WD FIN	TRANSPARENT WOOD FINISH
TRTD	TREATED
TS	TENSILE STRENGTH OR TUBE STEEL
TSTAT	THERMOSTAT
TV	TELEVISION
TYP	TYPICAL
TW	WIDE OR WEST

U

U	HEAT TRANSFER COEFFICIENT
UC	UNDERCUT
UCD	UNDERCUT DOOR
UGND	UNDERGROUND
UL	UNDERWRITERS LABORATORIES
ULT	ULTIMATE
UNFIN	UNFINISH
UON	UNLESS OTHERWISE NOTED
UPS	UNINTERRUPTIBLE POWER SUPPLY
UR	URINAL
UTIL	UTILITY
UV	ULTRAVIOLET

V

V	VOLT
VAC	VACUUM
VAR	VARIES
VCT	VINYL COMPOSITION TILE VITRIFIED CLAY TILE
VEH	VEHICLE
VENT	VENTILATION
VERT	VERTICAL
VEST	VESTIBULE
VFAT	VINYL FACED ACOUSTICAL TILE
VIC	VICINITY
VID	VIDEO
VIF	VERIFY IN FIELD
VNR	VENEER
VOC	VOLATILE ORGANIC COMPOUND
VOL	VOLUME
VOLT	VOLTAGE
VP	VENEER PLASTER
VR	VAPOR RETARDER
VTR	VENT THROUGH ROOF
VWC	VINYL WALL COVERING
VWF	VINYL WALL FABRIC

W

W/	WITH
W/O	WITHOUT
WARR	WARRANTY
WBL	WOOD BLOCKING
WC	WALL COVERING OR WATER CLOSET
WC WL HNG	WATER CLOSET, WALL HUNG
WCHR	WATER CHILLER
WCL WL MTD	WATER COOLER, WALL MOUNTED
WD	WOOD
WDW	WINDOW
WF	WIDE FLANGE
WFAB	WALL FABRIC
WFR	WOOD FRAME
WFS	WOOD FURRING STRIPS
WH	WATER HEATER
WHSE	WAREHOUSE
WLD	WELDED
WM	WIRE MESH
WP	WATERPROOFING
WPD	WATER PRESSURE DROP
WPM	WATERPROOF MEMBRANE

W (CONT'D)

WR	WEATHER RESISTANT
WS	WEATHERSTRIP
WSCT	WAINSCOT
WT	WEIGHT
WWF	WELDED WIRE FABRIC

X

X BRACE	CROSS BRACE
XPS	EXTRUDED POLYSTYRENE BOARD (INSULATION)

Y

YD	YARD
YR	YEAR

CONSTRUCTION DOCUMENTS
FULLY SPRINKLERED

No.	Description	Date
1	SCHEMATIC DESIGN (SD)	10/20/2015
2	DESIGN DEVELOPMENT (DD)	01/18/2016
3	CONSTRUCTION DOCUMENTS (CD)	03/30/2016

CONSULTANTS:

(SEE PROJECT TEAM DIRECTORY ON GI000 COVER SHEET)

Seals and Signatures

LICENSED ARCHITECT · C 32660 · STATE OF CALIFORNIA

ARCHITECTS/ENGINEERS:

LEO A DALY
PLANNING ARCHITECTURE ENGINEERING INTERIORS
550 South Hope Street, 27th Floor
Los Angeles, California 90071, USA
213-629-0100 F213-629-0070
EST. 1915

Drawing Title: **STANDARD ABBREVIATIONS**

Approved: Project Director

Project Title: **CONSTRUCT OPERATING ROOM #8**

Location: 11201 BENTON STREET, LOMA LINDA, CA 92357

Date	Checked	Drawn
03/30/2016	MS	TV

Project Number: 605-14-640

Building Number: 1

Drawing Number: GI003

Office of Construction and Facilities Management

Department of Veterans Affairs

VA FORM 08-6231

three inches = one foot; one and one half inches = one foot; one inch = one foot; three quarters inch = one foot; one half inch = one foot; three eighths inch = one foot; one quarter inch = one foot; one eighth inch = one foot

C:\Users\mbsaguilayan\Documents\Autodesk\Revit 2013 Projects\046-10037-000_Central_mbsaguilayan.rvt 3/25/2016 7:57:17 PM

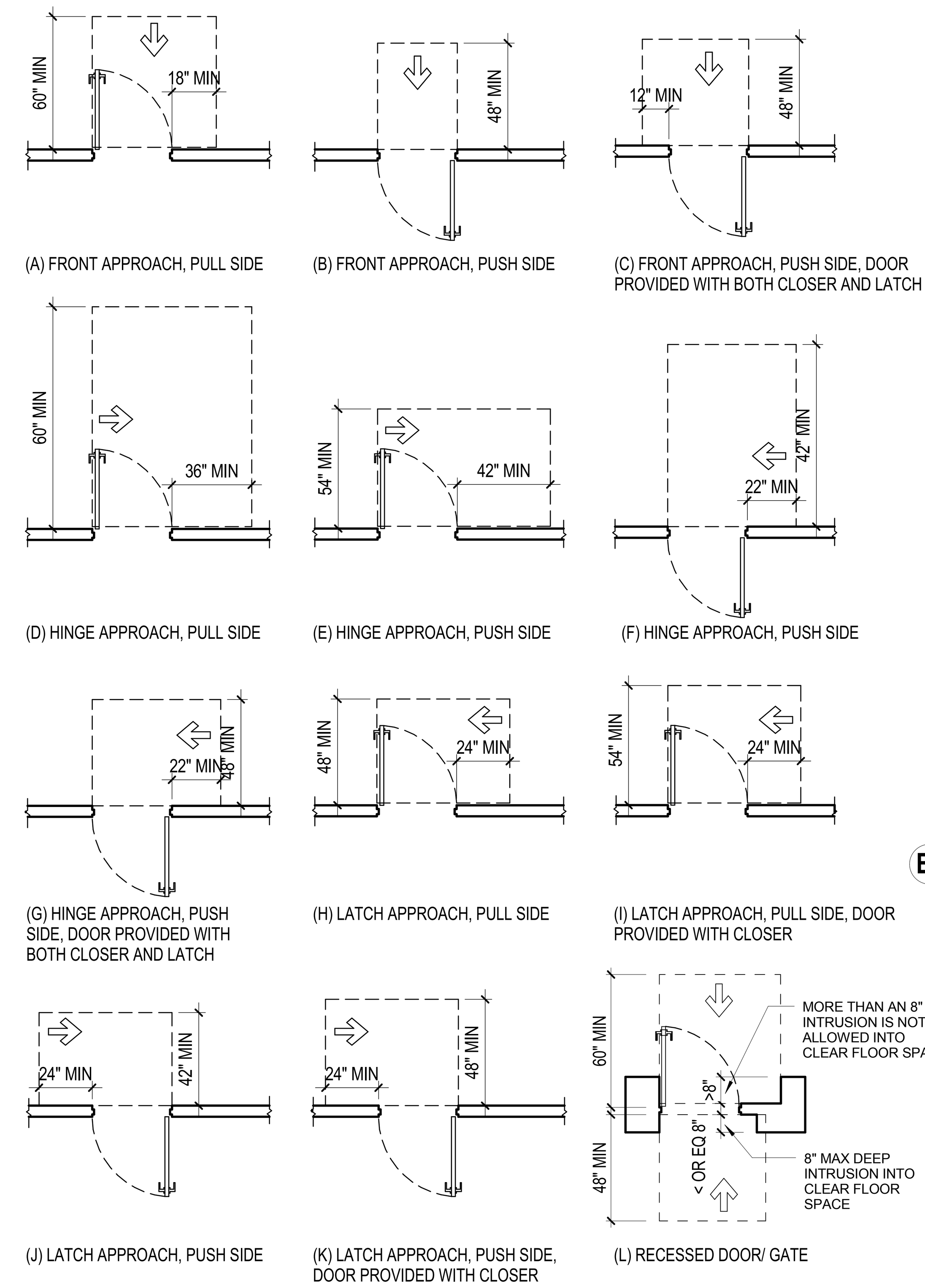

C4 **ACCESSIBLE SWING DOOR CLEARANCE**
SCALE: 1/4" = 1'-0"

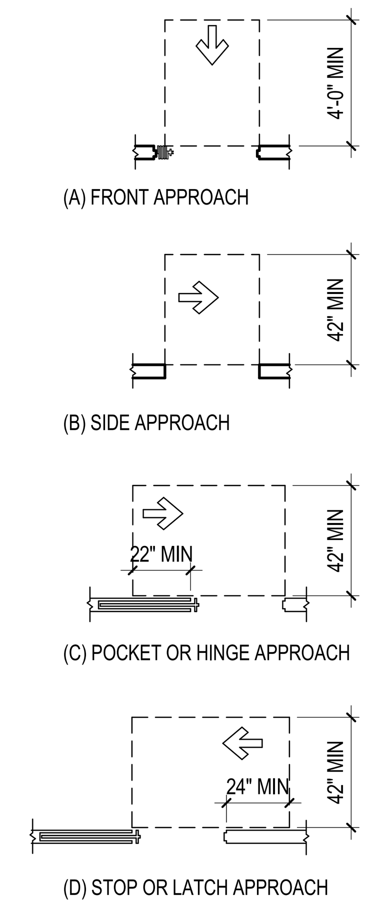

B6 **DOORWAY CLEARANCES**
SCALE: 1/4" = 1'-0"

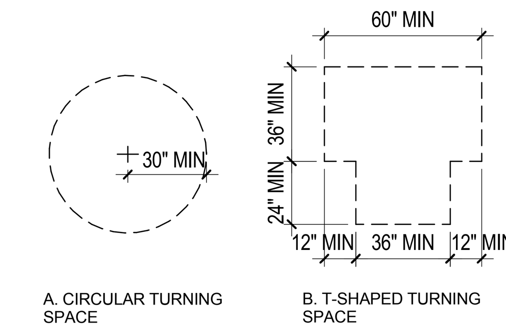

A7 **TURNING SPACE**
SCALE: 1/4" = 1'-0"

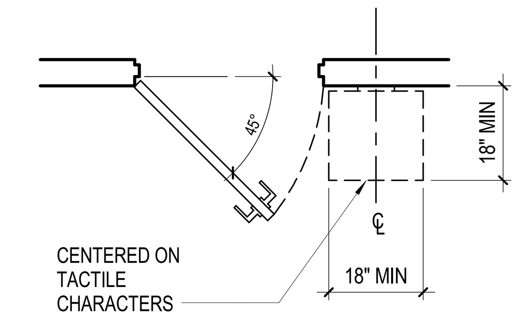

B7 **TACTILE SIGN LOCATION @ DOORS**
SCALE: 1/2" = 1'-0"

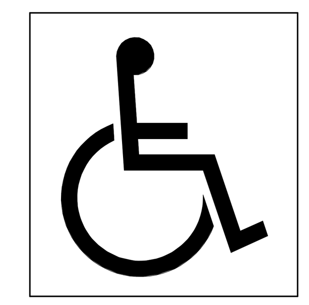

C6 **ACCESSIBILITY SYMBOL**
SCALE: 12" = 1'-0"

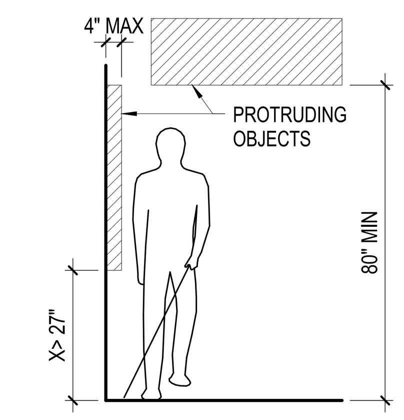

C7 **PROTRUDING OBJECTS CLEARANCE**
SCALE: 3/8" = 1'-0"

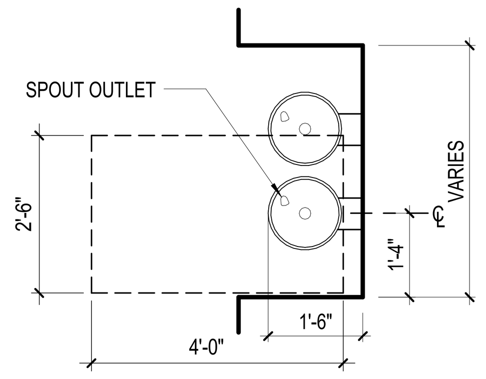

NOTE: SPOUT OUTLET SHALL BE 36" MAX AFF / GROUND; 27" MIN. CLR FLOOR SPACE

D3 **ACCESSIBLE DRINKING FOUNTAIN1**
SCALE: 1/2" = 1'-0"

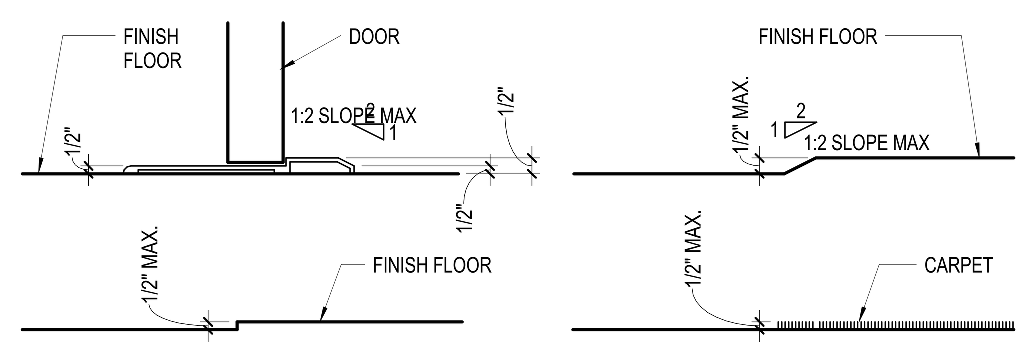

D4 **CHANGE OF ELEVATION**
SCALE: 3" = 1'-0"

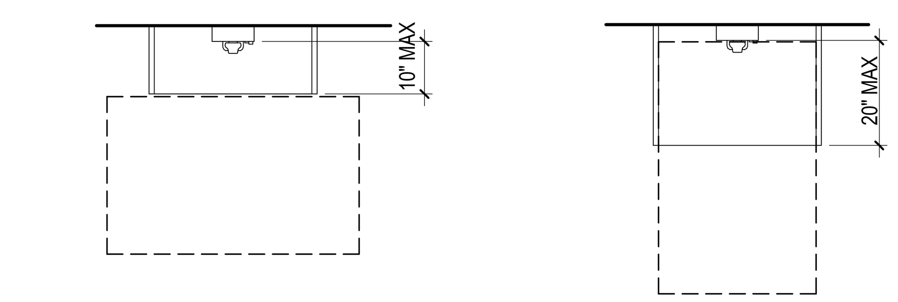

A. PARALLEL APPROACH TO TELEPHONE

B. FORWARD APPROACH TO TELEPHONE

NOTE: THE CORD FROM THE TELEPHONE TO THE HANDSET SHALL BE 29" LONG MINIMUM.

D6 **ACCESSIBLE TELEPHONE**
SCALE: 1/2" = 1'-0"

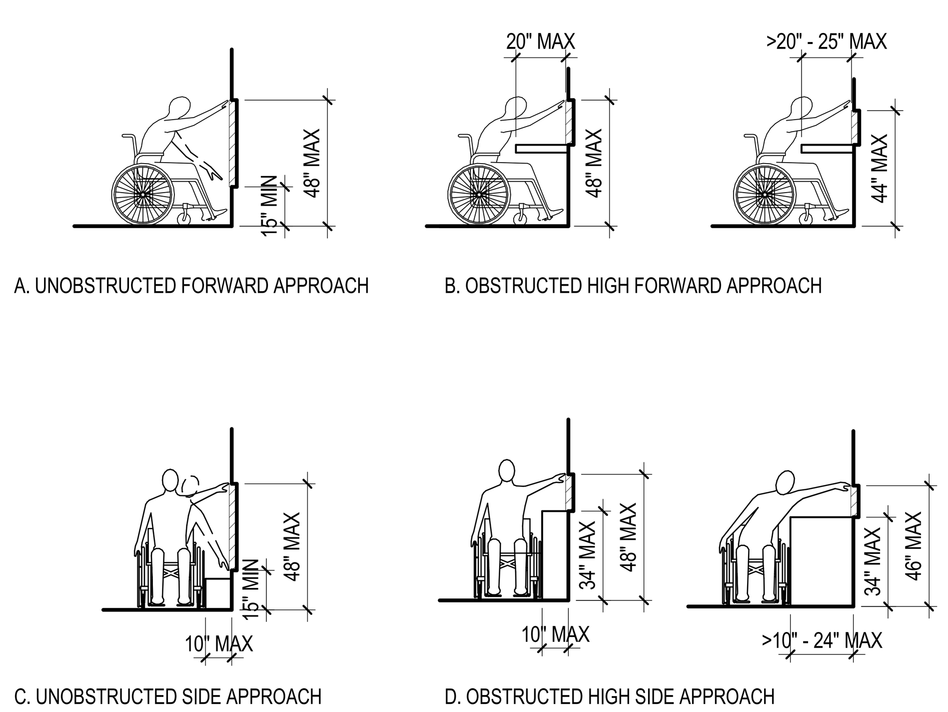

F2 **REACH RANGE**
SCALE: 1/4" = 1'-0"

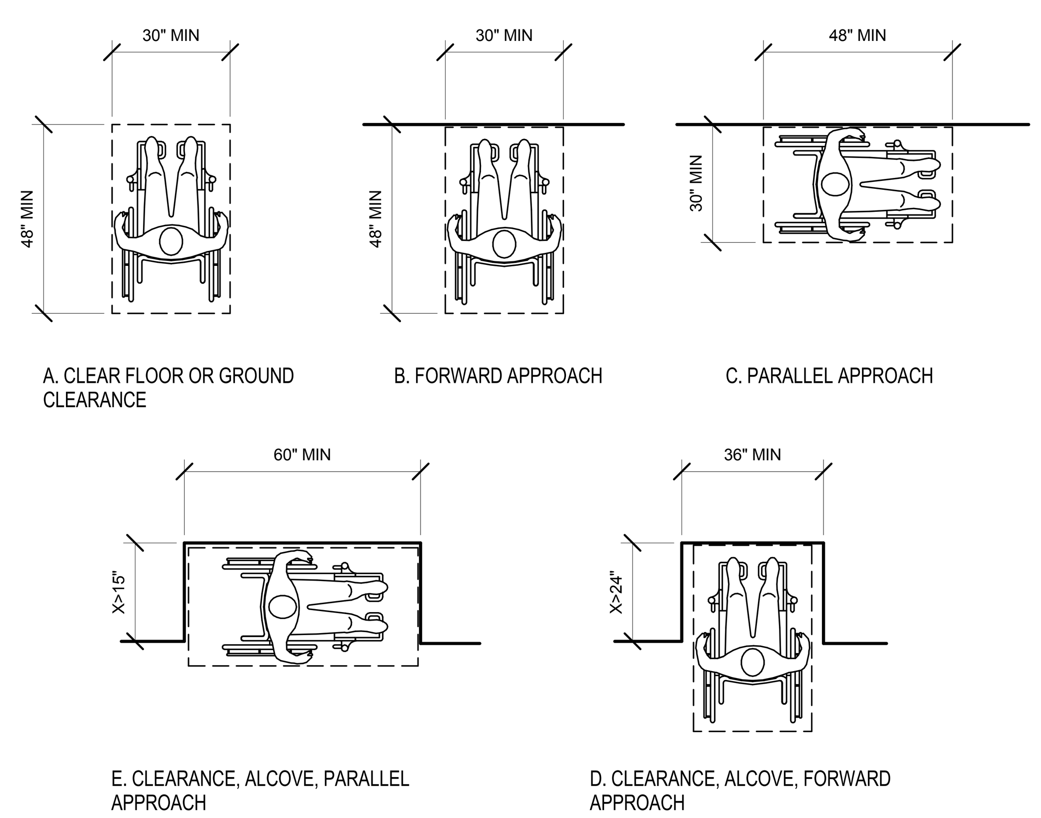

F5 **GROUND AND FLOOR CLEARANCE**
SCALE: 3/8" = 1'-0"

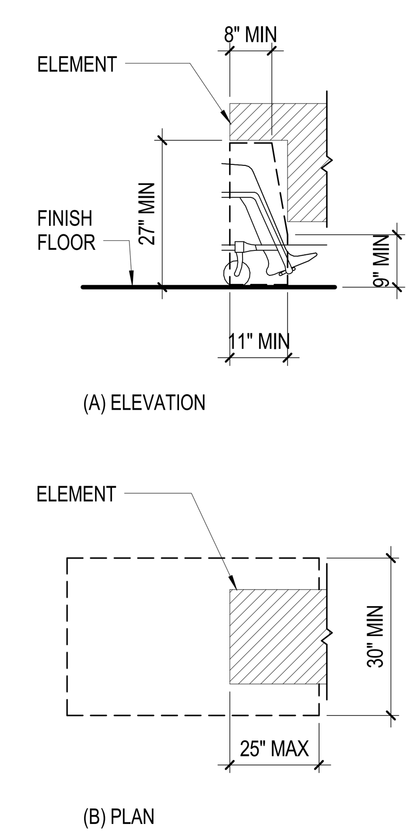

F6 **KNEE CLEARANCE**
SCALE: 1/2" = 1'-0"

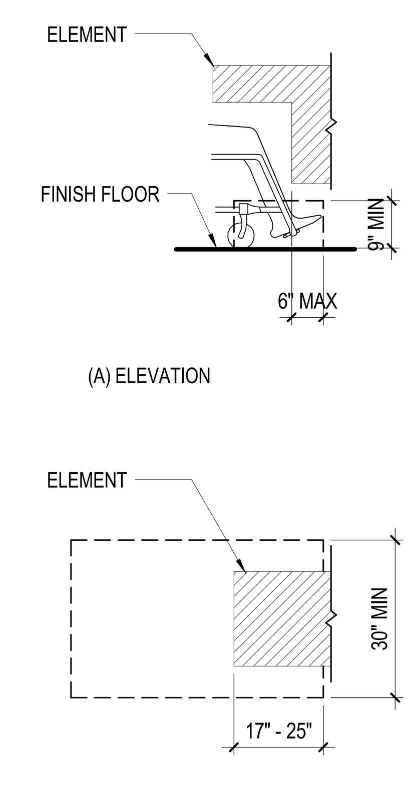

F7 **TOE CLEARANCE**
SCALE: 1/2" = 1'-0"

ACCESSIBILITY NOTES

1. IN BUILDINGS AND FACILITIES, FLOORS OF A GIVEN STORY SHALL BE A COMMON LEVEL THROUGHOUT, OR SHALL BE CONNECTED BY PEDESTRIAN RAMPS, PASSENGER ELEVATORS OR SPECIAL ACCESS LIFTS.

2. FLOOR SURFACES SHALL BE SLIP-RESISTANT.

3. ABRUPT CHANGES IN LEVEL ALONG ANY ACCESSIBLE ROUTE SHALL NOT EXCEED 1/2" IN HEIGHT. LEVEL CHANGES NOT EXCEEDING 1/4" MAY BE VERTICAL. BEVEL OTHERS WITH A SLOPE NO GREATER THAN 1:2.

4. LATCHING AND LOCKING DOORS THAT ARE HAND ACTIVATED AND WHICH ARE IN A PATH OF TRAVEL SHALL BE OPERABLE WITH A SINGLE EFFORT BY LEVER TYPE HARDWARE, PANIC BARS, PUSH-PULL ACTIVATING BARS, OR OTHER HARDWARE DESIGNED TO PROVIDE PASSAGE WITHOUT REQUIRING THE ABILITY TO GRASP THE OPENING HARDWARE. MOUNT DOOR OPENING HARDWARE BETWEEN 34" AND 48" ABOVE FLOOR FINISH.

5. CENTER HAND ACTIVATED DOOR OPENING HARDWARE BETWEEN 34" AND 48" ABOVE THE FLOOR.

6. MAXIMUM PULL OR PUSH EFFORT TO OPERATE DOORS SHALL NOT EXCEED 5 POUNDS FOR EXTERIOR DOORS AND 5 POUNDS FOR INTERIOR DOORS, MEASURED AT RIGHT ANGLES TO HINGED DOORS AND AT CENTER PLANE OF SLIDING OR FOLDING DOORS. CORRESPONDING DEVICES OR AUTOMATIC DOOR OPERATORS MAY BE UTILIZED TO MEET THE ABOVE STANDARDS. MINIMUM EFFORT ALLOWABLE BY APPROPRIATE ADMINISTRATIVE AUTHORITY TO OPERATE REQUIRED FIRE DOORS MAY BE INCREASED NOT TO EXCEED 15 POUNDS.

7. THE BOTTOM 10" OF ALL DOORS (EXCEPT SLIDING AND AUTOMATIC) SHALL HAVE A SMOOTH UNINTERRUPTED SURFACE TO ALLOW THE DOOR TO BE OPENED BY A WHEELCHAIR FOOTREST WITHOUT CREATING A TRAP OR HAZARDOUS CONDITION. PROVIDE A 10" HIGH SMOOTH PANEL ON THE PUSH SIDE OF NARROW FRAME DOORS.

8. EVERY REQUIRED ENTRANCE OR PASSAGE DOORWAY SHALL BE NOT LESS THAN 3' IN WIDTH AND NOT LESS THAN 6'-8" IN HEIGHT. DOORS SHALL BE CAPABLE OF OPENING AT LEAST 90 DEGREES AND SHALL BE SO MOUNTED THAT THE CLEAR WIDTH OF THE DOORWAY IS NOT LESS THAN 32".

9. WHERE A PAIR OF DOORS IS UTILIZED, AT LEAST ONE OF THE DOORS SHALL PROVIDE A CLEAR, UNOBSTRUCTED OPENING WIDTH OF 32" WITH THE LEAF POSITIONED AT AN ANGLE OF 90 DEGREES FROM ITS CLOSED POSITION.

10. IDENTIFY ACCESSIBLE ENTRANCES WITH AT LEAST ONE STANDARD ISA SIGN AND WITH ADDITIONAL DIRECTIONAL SIGNS, AS REQUIRED, VISIBLE FROM APPROACHING PEDESTRIAN WAYS.

11. THE FLOOR OR LANDING ON EACH SIDE OF AN ENTRANCE OR PASSAGE DOOR SHALL BE LEVEL AND CLEAR. THE LEVEL AND CLEAR AREA SHALL HAVE A LENGTH IN THE DIRECTION OF DOOR SWING OF AT LEAST 72" AND THE LENGTH OPPOSITE THE DIRECTION OF DOOR SWING OF 48" AS MEASURED AT RIGHT ANGLES TO THE PLANE OF THE DOOR IN ITS CLOSED POSITION.

FLOORS OR LANDINGS SHALL BE NOT MORE THAN 1/2" LOWER THAN THE THRESHOLD OF THE DOORWAY. CHANGE IN LEVEL BETWEEN 1/4" AND 1/2" SHALL BE BEVELED WITH A SLOPE NO GREATER THAN 1:2.

12. TO ALERT THE VISUALLY IMPAIRED, MARK THE UPPER APPROACH AND THE LOWER TREAD OF EACH INTERIOR STAIR WITH A STRIP OF CLEARLY CONTRASTING COLOR AT LEAST 2" WIDE, PLACED PARALLEL TO AND NOT MORE THAN 1" FROM THE NOSE OF THE STEP OR LANDING. THE STRIP SHALL BE OF A MATERIAL THAT IS AT LEAST AS SLIP RESISTANT AS THE OTHER TREADS OF THE STAIR.

13. THE BOTTOM OF THE ELECTRICAL RECEPTACLE BOX SHALL BE 15" AFF MIN. ABOVE THE FLOOR OR WORKING PLATFORM.

14. PROVIDE A CLEAR FLOOR SPACE 30" X 48" IN FRONT OF LAVATORY TO PERMIT A FORWARD APPROACH.

15. MOUNT LAVATORIES WITH A MINIMUM CLEARANCE OF 29" FROM THE FLOOR TO THE BOTTOM OF THE APRON. PROVIDE KNEE CLEARANCE UNDER THE FRONT LIP EXTENDING A MINIMUM OF 30" IN WIDTH WITH 8" MINIMUM WIDTH, AND SHALL BE A MINIMUM OF 9" HIGH FROM THE FLOOR A MINIMUM OF 17" DEEP FROM THE FRONT OF THE LAVATORY.

16. FAUCET CONTROLS AND OPERATING MECHANISMS SHALL BE OPERABLE WITH ONE HAND AND SHALL NOT REQUIRE TIGHT GRASPING, PINCHING OR TWISTING OF THE WRIST. THE FORCE REQUIRED TO ACTIVATE CONTROLS SHALL BE NO GREATER THAN 5 POUNDS. LEVER OPERATED, PUSH TYPE AND ELECTRONICALLY CONTROLLED MECHANISMS ARE EXAMPLES OF ACCEPTABLE DESIGNS. SELF CLOSING ARE ALLOWED IF THE FAUCET REMAINS OPEN FOR AT LEAST 10 SECONDS.

17. INSULATE OR OTHERWISE COVER HOT WATER AND DRAIN PIPES UNDER LAVATORIES.

18. THE LOW DRINKING FOUNTAIN BUBBLER SHALL BE ACTIVATED BY A MANUALLY OPERATED SYSTEM NOT REQUIRING A FORCE GREATER THAN 5LB THAT IS LOCATED WITHIN 5 INCHES OF THE FRONT EDGE OF THE FOUNTAIN OR AN ELECTRONICALLY CONTROLLED DEVICE.

19. THE BUBBLER OUTLET ORIFICE SHALL BE LOCATED WITHIN 5" OF THE FRONT OF THE LOW DRINKING FOUNTAIN AND SHALL BE WITHIN 36" OF THE FLOOR. THE WATER STREAM FROM THE BUBBLER SHALL BE SUBSTANTIALLY PARALLEL TO THE FRONT EDGE OF THE DRINKING FOUNTAIN.

20. WALKS, SIDEWALKS AND PEDESTRIAN WAYS SHALL BE FREE OF GRATING WHENEVER POSSIBLE. FOR GRATINGS LOCATED IN THE SURFACE OF ANY OF THESE AREAS GIRD OPENINGS IN GRATINGS SHALL BE NO GREATER THAN 1/2" WIDE IN ONE DIRECTION. IF GRATINGS HAVE ELONGATED OPENINGS, THEY SHALL BE PLACED SO THAT THE LONG DIMENSION IS PERPENDICULAR TO THE DOMINANT DIRECTION OF TRAVEL.

21. DOUBLE SET OF HANDRAILS SHALL BE PROVIDED IN THE ELEVATOR. THE RAILS SHALL BE SMOOTH AND THE INSIDE SURFACE AT LEAST 1 1/2" CLEAR OF THE WALLS AT A NOMINAL HEIGHT OF 32" ABOVE THE FLOOR. MINIMUM ELEVATOR DOOR SHALL BE 48" WIDE AND MINIMUM ELEVATOR PLATFORM SIZE SHALL BE 8'-0" X 6'-2".

22. THE CENTERLINE OF THE HIGHEST OPERABLE PART OF THE ELEVATOR CALL BUTTONS OR KEYPADS SHALL BE NO HIGHER THAN 48" ABOVE THE FINISH FLOOR. CALL BUTTONS SHALL BE A MINIMUM OF 3/4" IN SIZE AND RAISED OR FLUSH. VISUAL INDICATION SHALL BE PROVIDED TO SHOW EACH CALL REGISTERED AND EXTINGUISHED. WHEN ANSWERED. OBJECTS ADJACENT TO AND BELOW HALL CALL BUTTONS SHALL NOT PROJECT MORE THAN 4" FROM THE WALL. A CLEAR FLOOR OR GROUND SPACE MIN. 30" X 48" SHALL BE PROVIDED AT CALL CONTROLS.

23. FLOOR BUTTONS SHALL BE PROVIDED WITH VISUAL INDICATORS TO SHOW WHEN EACH CALL IS REGISTERED. THE VISUAL INDICATORS SHALL BE EXTINGUISHED WHEN EACH CALL IS ANSWERED.

24. EXCEPT FOR PHOTO ELECTRIC TUBE BYPASS SWITCHES, EMERGENCY CONTROL, INCLUDING THE EMERGENCY STOP AND RETURN, SHALL BE GROUPED IN OR ADJACENT TO THE BOTTOM OF THE PANEL AND SHALL BE NO LOWER THAN 2'-11" FROM THE FLOOR. FOR MULTIPLE CONTROLS ONLY, ONE SET MUST COMPLY WITH THESE HEIGHT REQUIREMENTS.

25. THE EMERGENCY TELEPHONE HANDSET SHALL BE POSITIONED NO HIGHER THAN 48" ABOVE THE FLOOR, AND THE HANDSET CORD SHALL BE A MINIMUM OF 2'-5" IN LENGTH. A CLEAR FLOOR OR GROUND SPACE MIN 30" X 48" SHALL BE PROVIDED. THE DISTANCE FROM THE EDGE OF THE TELEPHONE ENCLOSURE TO THE FACE OF THE TELEPHONE UNIT SHALL BE MAXIMUM 10" FOR PARALLEL APPROACH, MAXIMUM 20" FOR FORWARD APPROACH.

26. THE MINIMUM ILLUMINATION AT THE CAR CONTROLS, THRESHOLD, AND THE LANDING WHEN A CAR OR LANDING DOORS ARE OPEN SHALL NOT BE LESS THAN 5 FOOT-CANDLES.

27. A VISUAL AND AUDIBLE SIGNAL SHALL BE PROVIDED AT EACH HOISTWAY ENTRANCE TO INDICATE WHICH CAR IS ANSWERING A CALL AND THE CAR'S DIRECTION OF TRAVEL. WHERE IN-CAR SIGNALS ARE PROVIDED, THEY SHALL BE VISIBLE FROM THE FLOOR AREA ADJACENT TO THE HALL CALL BUTTONS.

28. THE VISUAL SIGNAL FIXTURES SHALL BE CENTERED AT 72" MINIMUM ABOVE THE FINISH FLOOR OR GROUND AND MINIMUM 2 1/2" MEASURED ALONG THE VERTICAL CENTERLINE OF THE ELEMENT. SIGNALS SHALL BE VISIBLE FROM THE FLOOR AREA ADJACENT TO THE HALL CALL BUTTON.

29. THE AUDIBLE SIGNAL SHALL SOUND ONCE FOR THE UP DIRECTION AND TWICE FOR THE DOWN DIRECTION OR SHALL HAVE VERBAL ANNUNCIATOR THAT INDICATE THE DIRECTION OF ELEVATOR CAR TRAVEL.

30. THE VISUAL SIGNAL FIXTURES SHALL BE CENTERED AT 72" MINIMUM ABOVE THE FINISH FLOOR OR GROUND AND MINIMUM 2 1/2" MEASURED ALONG THE VERTICAL CENTERLINE OF THE ELEMENT. SIGNALS SHALL BE VISIBLE FROM THE FLOOR AREA ADJACENT TO THE HALL CALL BUTTON.

31. THE AUDIBLE SIGNAL SHALL SOUND ONCE FOR THE UP DIRECTION AND TWICE FOR THE DOWN DIRECTION OR SHALL HAVE VERBAL ANNUNCIATOR THAT INDICATE THE DIRECTION OF ELEVATOR CAR TRAVEL.

CONSTRUCTION DOCUMENTS
FULLY SPRINKLERED

No.	Description	Date
1	SCHEMATIC DESIGN (SD)	10/20/2015
2	DESIGN DEVELOPMENT (DD)	01/18/2016
3	CONSTRUCTION DOCUMENTS (CD)	03/30/2016

CONSULTANTS:
(SEE PROJECT TEAM DIRECTORY ON GI000 COVER SHEET)

Seals and Signatures

LICENSED ARCHITECT MICHELLE B SAQUILAYAN No. C 32660 REN. 10-31- STATE OF CALIFORNIA

ARCHITECTS/ENGINEERS:
LEO A DALY
PLANNING ARCHITECTURE ENGINEERING INTERIORS
550 South Hope Street, 27th Floor
Los Angeles, California 90071, USA
213-629-0100 F213-629-0070
EST. 1915

Drawing Title: **ACCESSIBILITY NOTES AND DIAGRAMS**

Approved: Project Director

Project Title: **CONSTRUCT OPERATING ROOM #8**

Location: 11201 BENTON STREET LOMA LINDA, CA 92357

Date: 03/30/2016 | Checked: MS | Drawn: TV

Project Number: 605-14-640

Building Number: 1

Drawing Number: **GI004**

Office of Construction and Facilities Management

Department of Veterans Affairs

VA FORM 08-6231

3/25/2016 3:27:38 PM C:\Users\mbsaquilayan\Documents\Autodesk\Revit 2013 Projects\046-10037-000_Central_mbsaquilayan.rvt

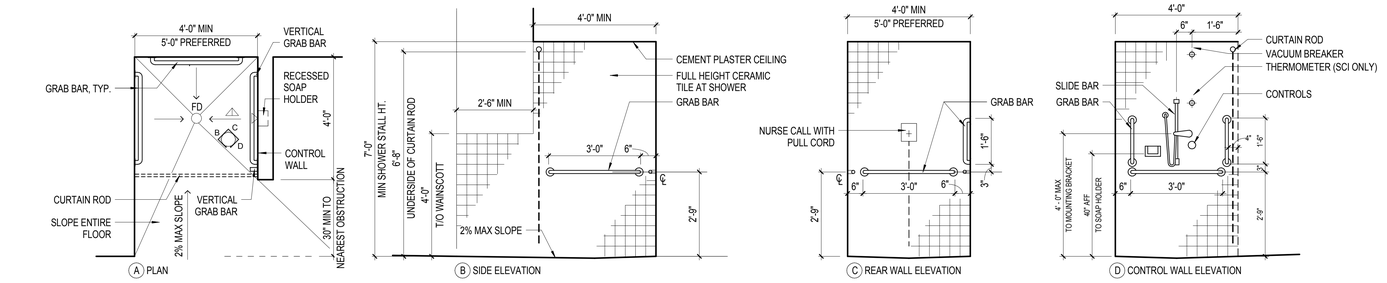

(A) PLAN (B) SIDE ELEVATION (C) REAR WALL ELEVATION (D) CONTROL WALL ELEVATION

A1 VA PATIENT ACCESSIBLE SHOWER ROLL-IN
SCALE: 1/2" = 1'-0"

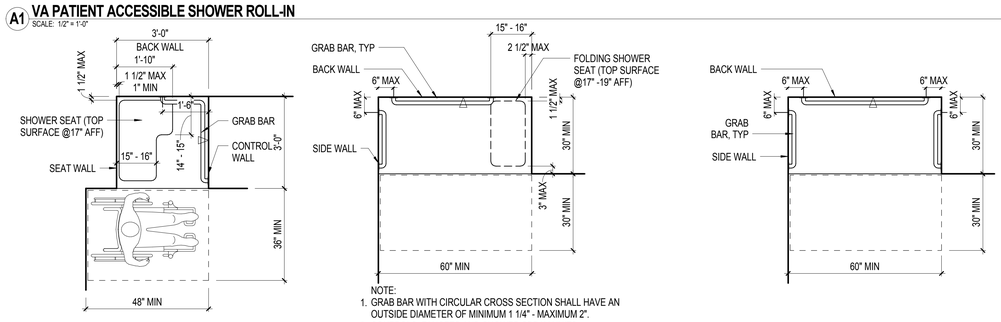

NOTE:
1. GRAB BAR WITH CIRCULAR CROSS SECTION SHALL HAVE AN OUTSIDE DIAMETER OF MINIMUM 1 1/4" - MAXIMUM 2".
2. CONTROLS, FAUCETS AND SHOWER SPRAY UNITS SHALL BE WITHIN REACH RANGE.

(A) TRANSFER TYPE SHOWER COMPARTMENT SIZE AND CLEARANCE

(B) STANDARD ROLL-IN TYPE SHOWER COMPARTMENT SIZE AND CLEARANCE WITH SHOWER SEAT

(C) STANDARD ROLL-IN TYPE SHOWER COMPARTMENT SIZE AND CLEARANCE WITHOUT SHOWER SEAT

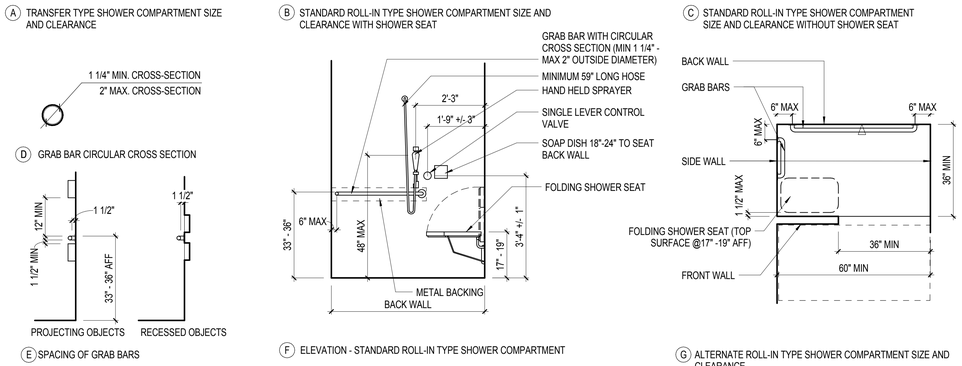

(D) GRAB BAR CIRCULAR CROSS SECTION

(E) SPACING OF GRAB BARS

(F) ELEVATION - STANDARD ROLL-IN TYPE SHOWER COMPARTMENT

(G) ALTERNATE ROLL-IN TYPE SHOWER COMPARTMENT SIZE AND CLEARANCE

D1 ABAAS ACCESSIBLE SHOWER STALL AND GRAB BARS
SCALE: 1/2" = 1'-0"

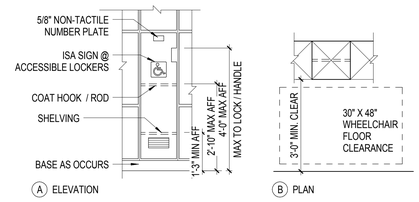

(A) ELEVATION (B) PLAN

NOTES:
1. AT LEAST ONE LOCKER AND NOT LESS THAN 5% OF ALL LOCKERS SHALL BE ACCESSIBLE TO PERSONS WITH DISABILITIES.
2. LOCKS @ ACCESSIBLE LOCKERS SHALL BE LOCATED MAX 48" AFF; SHELVES AND COAT HOOK/ROD SHALL BE LOCATED NO LESS THAN 15" AFF AND NO MORE THAN 34" AFF FOR SHELVES AND 48" AFF FOR TOP OF HOOK/ROD.
3. HARDWARE SHALL OPERATE UPON 5LBS, USING ONE HAND WITHOUT REQUIRING TIGHT TWISTING, PINCHING OR GRASPING.

C5 ACCESSIBLE LOCKERS
SCALE: 1/2" = 1'-0"

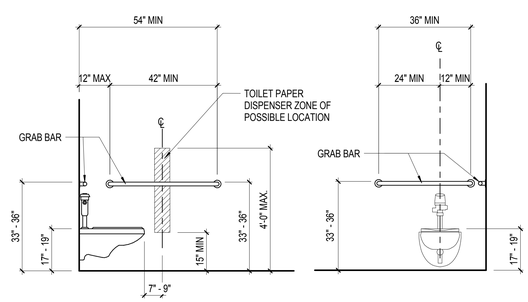

(A) SIDE WALL GRAB BAR AT WATER CLOSET

(B) REAR WALL GRAB BAR AT WATER CLOSET

D5 GRAB BAR, ACCESSIBLE WATER CLOSET AND DISPENSER
SCALE: 1/2" = 1'-0"

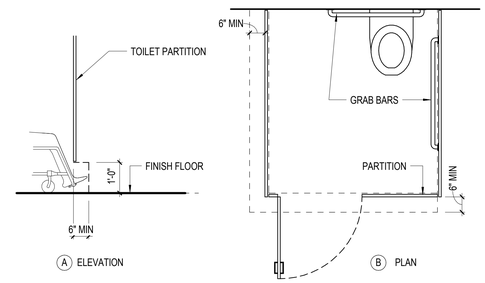

(A) ELEVATION (B) PLAN

A7 ACCESSIBLE TOILET COMPARTMENT TOE CLEARANCE
SCALE: 1/2" = 1'-0"

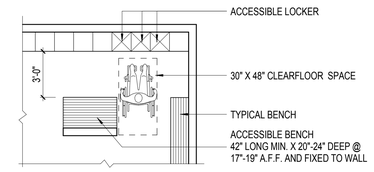

(A) PLAN

C7 ACCESSIBLE BENCH
SCALE: 1/4" = 1'-0"

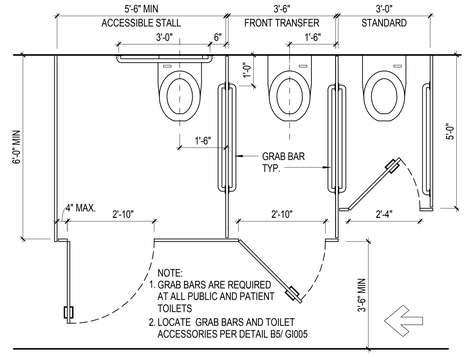

D7 TOILET STALL DETAILS
SCALE: 1/2" = 1'-0"

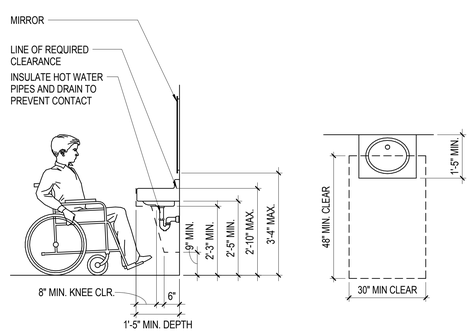

A. ELEVATION B. PLAN

NOTE: LOCATE FAUCET CONTROL, SOAP AND TOWEL DISPENSERS WITHIN THE REACH RANGE.

F1 ACCESSIBLE SINK / LAVATORY CLEARANCE
SCALE: 1/2" = 1'-0"

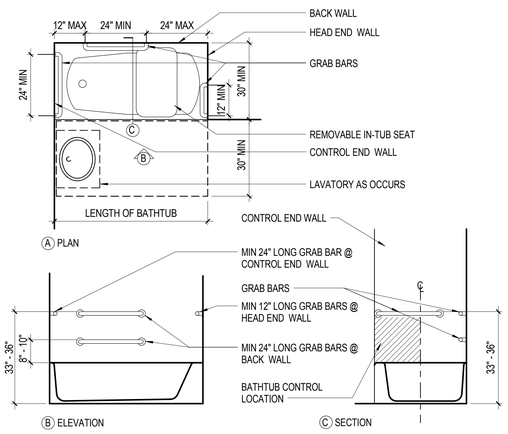

(A) PLAN (B) ELEVATION (C) SECTION

NOTE: PROVIDE SHOWER SPAY UNITS W/ MIN 59" LONG HOSE.

F3 ACCESSIBLE BATHTUB AND GRAB BAR WITH REMOVABLE IN-TUB SEATS
SCALE: 1/2" = 1'-0"

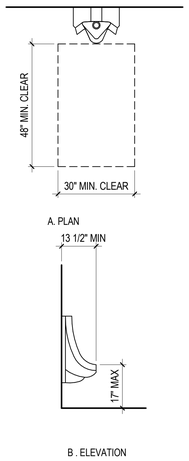

B . ELEVATION

F5 ACCESSIBLE URINAL
SCALE: 1/2" = 1'-0"

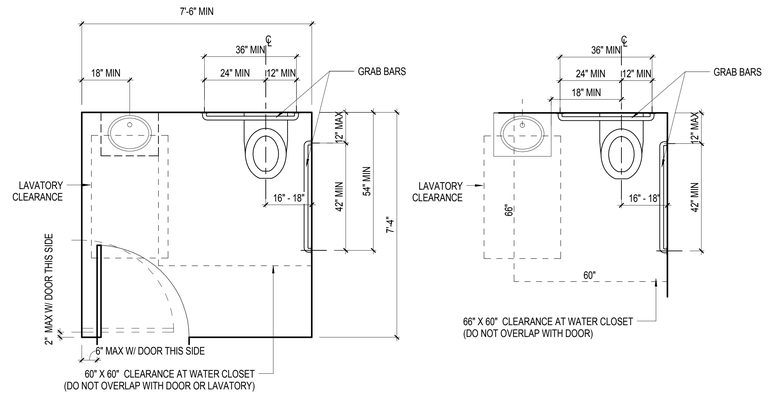

(A) WHEELCHAIR ACCESSIBLE WATER CLOSET

(B) OVERLAP OF WATER CLOSET CLEARANCE IN RESIDENTIAL DWELLING UNITS

F6 ACCESSIBLE WATER CLOSET
SCALE: 1/2" = 1'-0"

SHEET NOTES

CONSTRUCTION DOCUMENTS FULLY SPRINKLERED

No.	Description	Date
1	SCHEMATIC DESIGN (SD)	10/20/2015
2	DESIGN DEVELOPMENT (DD)	01/18/2016
3	CONSTRUCTION DOCUMENTS (CD)	03/30/2016

CONSULTANTS:

(SEE PROJECT TEAM DIRECTORY ON GI000 COVER SHEET)

Seals and Signatures

LICENSED ARCHITECT MICHELLE B SAQUILAYAN C. 32666 R.E.N. 10-31-16 STATE OF CALIFORNIA

ARCHITECTS/ENGINEERS:

LEO A DALY
PLANNING ARCHITECTURE ENGINEERING INTERIORS
550 South Hope Street, 27th Floor
Los Angeles, California 90071, USA
213-629-0100 F213-629-0070
EST. 1915

Drawing Title: **ACCESSIBILITY DIAGRAMS**

Approved: Project Director

Project Title: **CONSTRUCT OPERATING ROOM #8**

Location: 11201 BENTON STREET LOMA LINDA, CA 92357

Date: 03/30/2016 | Checked: MS | Drawn: TV

Project Number: 605-14-640

Building Number: 1

Drawing Number: **GI005**

Office of Construction and Facilities Management

Department of Veterans Affairs

VA FORM 08-6231

3/25/2016 3:27:40 PM C:\Users\mbsaquilayan\Documents\Autodesk\Revit 2013 Projects\04-10037-000_Central_mbsaquilayan.rvt

TYPICAL TOILET COMPARTMENT ACCESSORY MOUNTING HEIGHTS

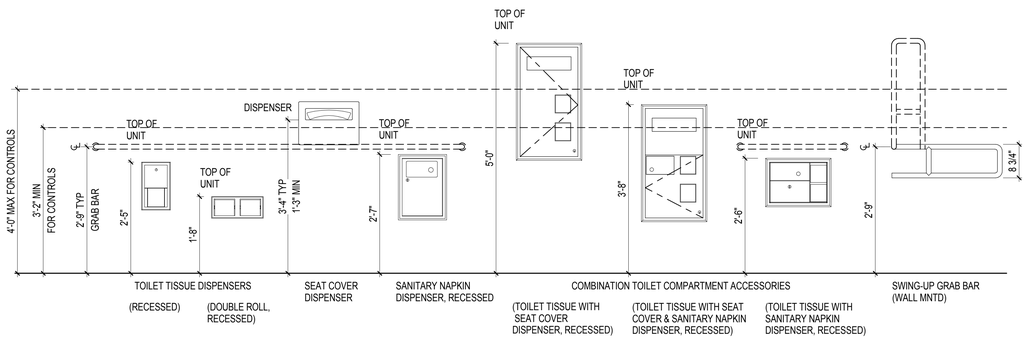

TYPICAL LAVATORY AREA ACCESSORY MOUNTING HEIGHTS

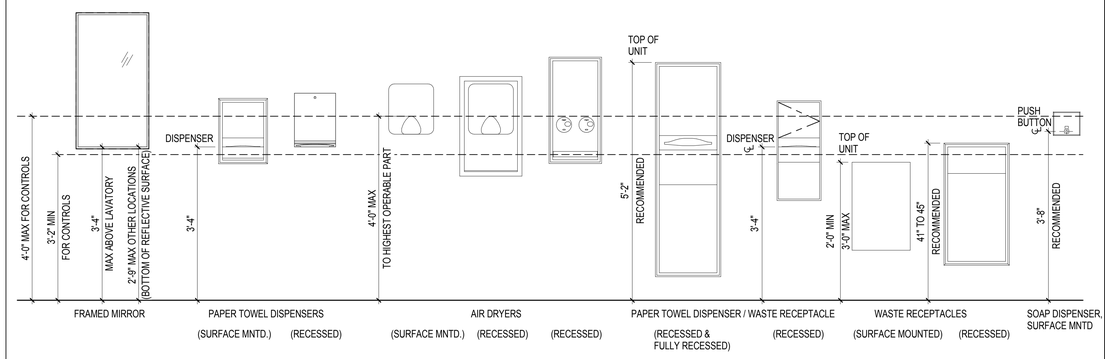

TYPICAL SHOWER AREA AND MISCELLANEOUS ACCESSORY MOUNTING HEIGHTS

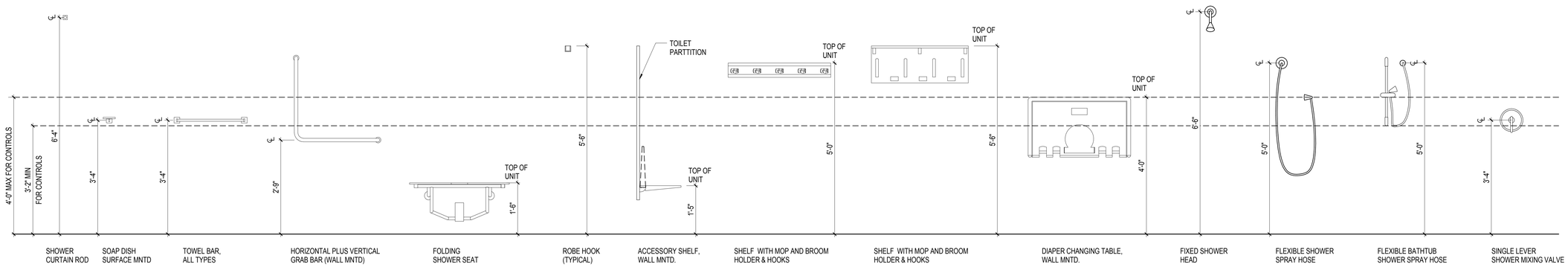

SHEET NOTES

A. IT IS THE INTENT OF THE DESIGN THAT ALL ITEMS SHOWN MOUNTED AT TYPICAL HEIGHTS BE ACCESSIBLE TO PERSONS WITH DISABILITIES, UON.

B. THE PURPOSE OF THIS SHEET IS TO ILLUSTRATE TYPICAL MOUNTING HEIGHTS AND , WHERE APPLICABLE, TYPICAL MINIMUM OR MAXIMUM CLEARANCES AND/OR TYPICAL MOUNTING CONFIGURATIONS FOR A VARIETY OF ITEMS. ATTENTION: THIS SHEET MAY ILLUSTRATE ITEMS OR CONFIGURATIONS WHICH DO NOT OCCUR AS PART OF THE WORK OF THIS PROJECT. REFER TO PLANS, ELEVATIONS, SECTIONS, DETAILS AND SCHEDULES TO DETERMINE WHICH ITEMS AND CONFIGURATIONS APPLY TO THE WORK OF THIS PROJECT.

C. THE HEIGHTS, CLEARANCES, AND CONFIGURATIONS SHOWN ON THIS SHEET ARE TYPICAL AND SHALL APPLY TO ALL INSTANCES OF THE ITEM (OR GROUP OF ITEMS) SHOWN UNLESS OTHERWISE NOTED OR DIMENSIONED OTHERWISE. THE TYPICAL DIMENSIONS SHOWN ON THIS SHEET TAKE PRECEDENCE OVER TYPICAL DIMENSIONS SHOWN ON THE ELECTRICAL OR MECHANICAL DRAWINGS FOR THE MOUNTING OF ITEMS INSTALLED BY THE ELECTRICAL OR MECHANICAL TRADES

D. SPECIAL OR NON-TYPICAL MOUNTING HEIGHTS OCCUR ONLY WHERE INDICATED BY ANNOTATED SYMBOLS ; BY KEYED NOTES; BY NOTES ON PLANS, ELEVATIONS OR DETAILS; OR BY UNIQUE DIMENSIONS ON ELEVATIONS OR DETAILS.

E. FOR ADDITIONAL INFORMATION REGARDING THE PRECEDENCE OF DRAWINGS FOR DETERMINING THE EXACT LOCATION OF EACH EXPOSED PART OF THE WORK, REFER TO THE "ARCHITECTURAL GENERAL NOTES".

F. TYPICAL MOUNTING HEIGHTS FOR ADDITIONAL ITEMS OR GROUPINGS NOT SHOWN ON THIS SHEET MAY BE ILLUSTRATED BY OTHER SHEETS, REFER TO THE INDEX OF DRAWINGS FOR ADDITIONAL INFORMATION.

G. MOUNTING CONFIGURATION DIAGRAMS ARE ELEVATIONS WHICH ILLUSTRATE TYPICAL RULES GOVERNING THE RELATIONSHIPS BETWEEN, AND PLACEMENT OF, ITEMS WHICH OCCUR IN GROUPS OF RELATED ITEMS (SUCH AS TOILET ACCESSORIES) OR IN CLOSE PROXIMITY TO OTHER PARTS OF THE WORK (SUCH AS SWITCHES AND DOOR FRAMES). UNLESS OTHER MOUNTING CONFIGURATIONS ARE SPECIFICALLY NOTED, DIMENSIONED, OR ELEVATED BY THESE DRAWINGS, THE TYPICAL RELATIONSHIPS, ARRANGEMENTS, AND DIMENSIONS SHOWN BY THE TYPICAL CONFIGURATION DIAGRAMSAPPLY THROUGHOUT THE WORK OF THIS PROJECT.

H. MOUNTING HEIGHTS, DIMENSIONS, CLEARANCES, AND ACCESS REQUIREMENTS FOR TOILET ACCESSORIES SHOWN ON THIS SHEET ARE BASED UPON SPECIFIC MANUFACTURERS AND MODELS AS INDICATED BY THE SPECIFICATIONS. WHEN SIMILAR ACCESSORIES OF OTHER SPECIFIED AND ACCEPTABLE MANUFACTURERS (IF ANY) ARE UTILIZED, MOUNTING HEIGHTS, DIMENSIONS, CLEARANCES, AND ACCESS REQUIREMENTS OF THE SIMILAR MAY VARY FROM THOSE SHOWN. WHEN SIMILAR ACCESSORIES ARE UTILIZED, THE CONTRACTOR SHALL BE RESPONSIBLE FOR ALL COORDINATION REQUIRED TO ACHIEVE THE SAME AESTHETIC AND FUNCTIONAL DESIGN INTENT ILLUSTRATED BY THAT SHOWN ON THE DRAWINGS.

I. EACH SHOWER TO BE EQUIPPED WITH A FIXED SHOWER HEAD MOUNTED PER THIS SHEET, AND A SEPARATE FLEXIBLE 60" SHOWER SPRAY HOSE MOUNTED PER THIS SHEET, UON.

CONSTRUCTION DOCUMENTS
FULLY SPRINKLERED

No.	Description	Date
1	SCHEMATIC DESIGN (SD)	10/20/2015
2	DESIGN DEVELOPMENT (DD)	01/18/2016
3	CONSTRUCTION DOCUMENTS (CD)	03/30/2016

CONSULTANTS:

(SEE PROJECT TEAM DIRECTORY ON GI000 COVER SHEET)

Seals and Signatures

LICENSED ARCHITECT ANGELE B. SAOUDIAN C 32660 EXP. 10-31-16 STATE OF CALIFORNIA

ARCHITECTS/ENGINEERS:

LEO A DALY
PLANNING ARCHITECTURE ENGINEERING INTERIORS
550 South Hope Street, 27th Floor
Los Angeles, California 90071, USA
213-629-0100 F213-629-0070
EST. 1915

Drawing Title: TYPICAL TOILET ACCESSORY MOUNTING HEIGHTS

Approved: Project Director

Project Title: CONSTRUCT OPERATING ROOM #8

Location: 11201 BENTON STREET LOMA LINDA, CA 92357

Date: 03/30/2016 | Checked: MS | Drawn: TV

Project Number: 605-14-640

Building Number: 1

Drawing Number: GI006

Office of Construction and Facilities Management

Department of Veterans Affairs

VA FORM 08-6231

3/25/2016 3:27:41 PM C:\Users\mhsapulyan\Documents\Autodesk Revit 2013 Projects\046-10037-000_Central_mhsapulyan.rvt

TYPICAL DEVICE MOUNTING HEIGHTS

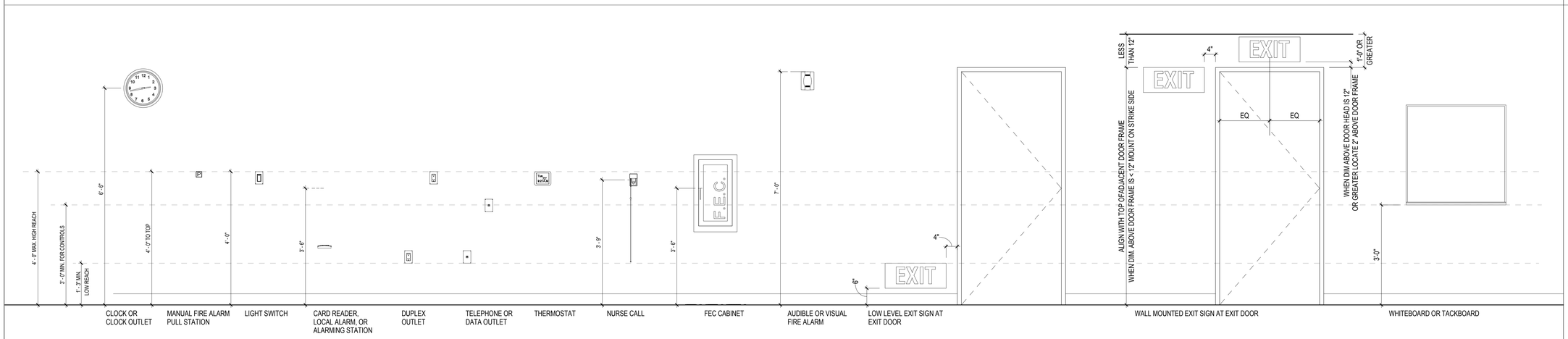

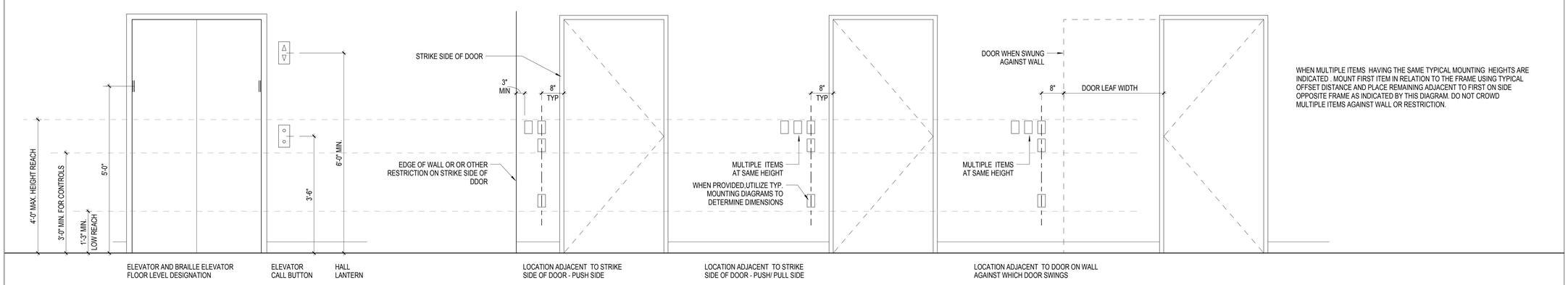

WHEN MULTIPLE ITEMS HAVING THE SAME TYPICAL MOUNTING HEIGHTS ARE INDICATED . MOUNT FIRST ITEM IN RELATION TO THE FRAME USING TYPICAL OFFSET DISTANCE AND PLACE REMAINING ADJACENT TO FIRST ON SIDE OPPOSITE FRAME AS INDICATED BY THIS DIAGRAM. DO NOT CROWD MULTIPLE ITEMS AGAINST WALL OR RESTRICTION.

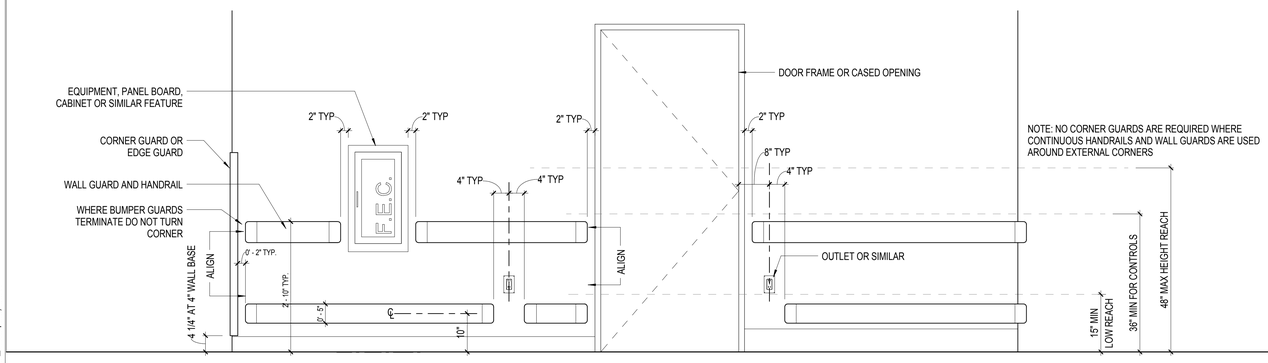

NOTE: NO CORNER GUARDS ARE REQUIRED WHERE CONTINUOUS HANDRAILS AND WALL GUARDS ARE USED AROUND EXTERNAL CORNERS

CORNER GUARD/ BUMPER RAIL/ CRASH RAIL/ HANDRAIL

SHEET NOTES

A. IT IS THE INTENT OF THE DESIGN THAT ALL ITEMS SHOWN MOUNTED AT TYPICAL HEIGHTS BE ACCESSIBLE TO PERSONS WITH DISABILITIES, UON.

B. THE PURPOSE OF THIS SHEET IS TO ILLUSTRATE TYPICAL MOUNTING HEIGHTS AND , WHERE APPLICABLE, TYPICAL MINIMUM OR MAXIMUM CLEARANCES AND/OR TYPICAL MOUNTING CONFIGURATIONS FOR A VARIETY OF ITEMS. ATTENTION: THIS SHEET MAY ILLUSTRATE ITEMS OR CONFIGURATIONS WHICH DO NOT OCCUR AS PART OF THE WORK OF THIS PROJECT. REFER TO PLANS, ELEVATIONS, SECTIONS, DETAILS AND SCHEDULES TO DETERMINE WHICH ITEMS AND CONFIGURATIONS APPLY TO THE WORK OF THIS PROJECT.

C. THE HEIGHTS, CLEARANCES, AND CONFIGURATIONS SHOWN ON THIS SHEET ARE TYPICAL AND SHALL APPLY TO ALL INSTANCES OF THE ITEM (OR GROUP OF ITEMS) SHOWN UNLESS OTHERWISE NOTED OR DIMENSIONED OTHERWISE. THE TYPICAL DIMENSIONS SHOWN ON THIS SHEET TAKE PRECEDENCE OVER TYPICAL DIMENSIONS SHOWN ON THE ELECTRICAL OR MECHANICAL DRAWINGS FOR THE MOUNTING OF ITEMS INSTALLED BY THE ELECTRICAL OR MECHANICAL TRADES.

D. SPECIAL OR NON-TYPICAL MOUNTING HEIGHTS OCCUR ONLY WHERE INDICATED BY ANNOTATED SYMBOLS ; BY KEYED NOTES; BY NOTES ON PLANS, ELEVATIONS OR DETAILS; OR BY UNIQUE DIMENSIONS ON ELEVATIONS OR DETAILS.

E. FOR ADDITIONAL INFORMATION REGARDING THE PRECEDENCE OF DRAWINGS FOR DETERMINING THE EXACT LOCATION OF EACH EXPOSED PART OF THE WORK, REFER TO THE "ARCHITECTURAL GENERAL NOTES".

F. TYPICAL MOUNTING HEIGHTS FOR ADDITIONAL ITEMS OR GROUPINGS NOT SHOWN ON THIS SHEET MAY BE ILLUSTRATED BY OTHER SHEETS, REFER TO THE INDEX OF DRAWINGS FOR ADDITIONAL INFORMATION.

G. MOUNTING CONFIGURATION DIAGRAMS ARE ELEVATIONS WHICH ILLUSTRATE TYPICAL RULES GOVERNING THE RELATIONSHIPS BETWEEN, AND PLACEMENT OF, ITEMS WHICH OCCUR IN GROUPS OF RELATED ITEMS (SUCH AS TOILET ACCESSORIES)OR IN CLOSE PROXIMITY TO OTHER PARTS OF THE WORK (SUCH AS SWITCHES AND DOOR FRAMES). UNLESS OTHER MOUNTING CONFIGURATIONS ARE SPECIFICALLY NOTED, DIMENSIONED, OR ELEVATED BY THESE DRAWINGS, THE TYPICAL RELATIONSHIPS, ARRANGEMENTS, AND DIMENSIONS SHOWN BY THE TYPICAL CONFIGURATION DIAGRAMS APPLY THROUGHOUT THE WORK OF THIS PROJECT.

H. MOUNTING HEIGHTS, DIMENSIONS, CLEARANCES, AND ACCESS REQUIREMENTS FOR TOILET ACCESSORIES SHOWN ON THIS SHEET ARE BASED UPON SPECIFIC MANUFACTURERS AND MODELS AS INDICATED BY THE SPECIFICATIONS. WHEN SIMILAR ACCESSORIES OF OTHER SPECIFIED AND ACCEPTABLE MANUFACTURERS (IF ANY) ARE UTILIZED, MOUNTING HEIGHTS, DIMENSIONS, CLEARANCES, AND ACCESS REQUIREMENTS OF THE SIMILAR MAY VARY FROM THOSE SHOWN. WHEN SIMILAR ACCESSORIES ARE UTILIZED, THE CONTRACTOR SHALL BE RESPONSIBLE FOR ALL COORDINATION REQUIRED TO ACHIEVE THE SAME AESTHETIC AND FUNCTIONAL DESIGN INTENT ILLUSTRATED BY THAT SHOWN ON THE DRAWINGS.

I. EACH SHOWER TO BE EQUIPPED WITH A FIXED SHOWER HEAD MOUNTED PER THIS SHEET, AND A SEPARATE FLEXIBLE 60" SHOWER SPRAY HOSE MOUNTED PER THIS SHEET, UON.

CONSTRUCTION DOCUMENTS
FULLY SPRINKLERED

No.	Description	Date
1	SCHEMATIC DESIGN (SD)	10/20/2015
2	DESIGN DEVELOPMENT (DD)	01/18/2016
3	CONSTRUCTION DOCUMENTS (CD)	03/30/2016

CONSULTANTS:

(SEE PROJECT TEAM DIRECTORY ON GI000 COVER SHEET)

Seals and Signatures

LICENSED ARCHITECT MICHELLE B SAQUILAYAN C 32660 EXP. 10-31-16 STATE OF CALIFORNIA

ARCHITECTS/ENGINEERS:

LEO A DALY
PLANNING ARCHITECTURE ENGINEERING INTERIORS
550 South Hope Street, 27th Floor
Los Angeles, California 90071, USA
213-629-0100 F213-629-0070
EST. 1915

Drawing Title: TYPICAL DEVICE MOUNTING HEIGHTS

Approved: Project Director

Project Title: CONSTRUCT OPERATING ROOM #8

Location: 11201 BENTON STREET LOMA LINDA, CA 92357

Date: 03/30/2016 | Checked: MS | Drawn: TV

Project Number: 605-14-640

Building Number: 1

Drawing Number: GI007

Office of Construction and Facilities Management

Department of Veterans Affairs

VA FORM 08-6231

3/25/2016 3:27:42 PM C:\Users\mbsaquilayan\Documents\Autodesk\Revit 2013 Projects\046-10037-000_Central_mbsaquilayan.rvt

CONSTRUCTION PHASING:

PHASE 1:
- RELOCATE ANESTHESIA WORKSTATIONS TO TEMPORARY OFFICE 3F-04 AND 3F-05 PRIOR TO DEMOLITION OF ANESTHESIA WORKSTATIONS
- DEMOLISH EXISTING ANESTHESIA WORKROOM 3F-08
- CONSTRUCT NEW MEDICATION PREP ROOM

NOTE: (E) MEDICATION PREP/ GRAFT ROOM SHALL REMAIN OPERATIONAL THROUGHOUT PHASE 1

PHASE 2:
- TEMPORARILY REARRANGE WORKSTATIONS IN (E) RECEPTION 3F-10 PRIOR TO DEMOLITION
- DEMOLISH EXISTING MEDICATION PREP/ GRAFT ROOM AND OFFICES
- CONSTRUCT NEW ANESTHESIA WORKROOMS AND ANESTHESIA CHIEF OFFICE

NOTE: (N) MEDICATION PREP/ GRAFT ROOM SHALL BE OPERATIONAL PRIOR TO PHASE 2 DEMOLITION

PHASE 3:
- DEMOLISH EXISTING OFFICES, STAFF BREAKROOM
- REMOVE AND RELOCATE EXISTING DRINKING FOUNTAIN
- CONSTRUCT NEW STAFF LOCKERS/ SHOWER ROOMS AND NURSE MANAGER OFFICE

NOTE: THERE WILL BE NO STAFF BREAKROOM DURING THIS PHASE

C5 PHASING PLAN - PHASE 1
SCALE: 1/8" = 1'-0"

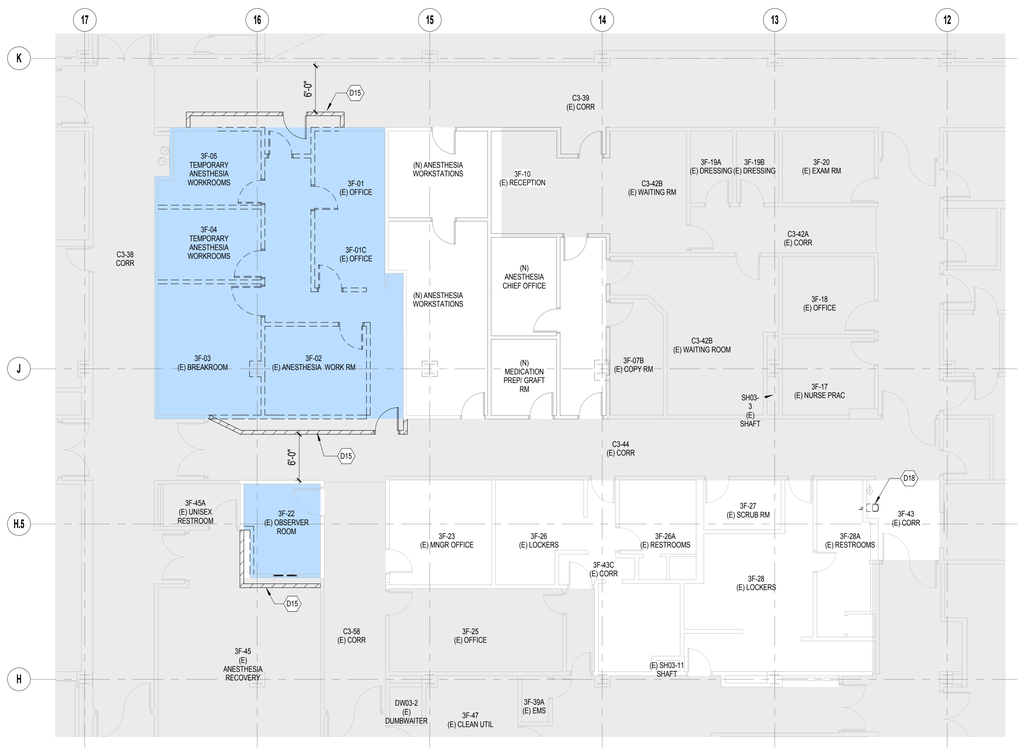

F5A PHASING PLAN - PHASE 3
SCALE: 1/8" = 1'-0"

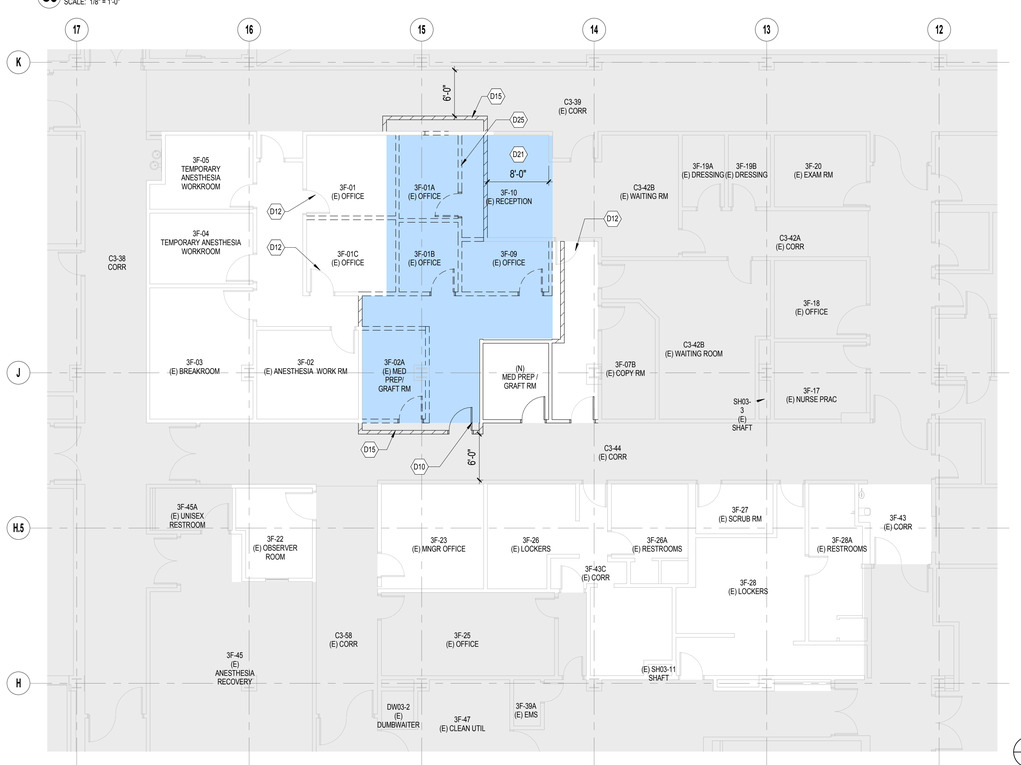

F5 PHASING PLAN - PHASE 2
SCALE: 1/8" = 1'-0"

N

0 4' 8' 16'
SCALE : 1/8" = 1'-0"

PLAN NOTES

#	NOTE
1	ALL AREAS OUTSIDE OF THE PROJECT SCOPE MUST REMAIN IN OPERATION THROUGHOUT CONSTRUCTION.
2	THE VA REQUIRES NOTIFICATION OF TEN (10) BUSINESS DAYS PRIOR TO ANY INTERRUPTIONS TO (E) UTILITIES.
3	CODE COMPLIANT EXITING MUST BE MAINTAINED THROUGHOUT CONSTRUCTION. CONSTRUCT ALL TEMPORARY PARTITIONS ACCORDING TO PHASING SCHEDULE.
4	SEE SHEET GI002 FOR INFECTION CONTROL
5	SUBSEQUENT PHASE SHALL NOT COMMENCE UNTIL PRECEDING PHASE IS COMPLETED
6	THE PURPOSE OF THIS DRAWING IS ONLY TO DEMONSTRATE SEQUENCE OF CONSTRUCTION. REFER TO AD101 FOR DEMOLITION NOTES

PHASING KENOTES

D08	RELOCATE ANESTHESIA WORKSTATIONS, FURNITURE & EQUIPMENT TO TEMPORARY OFFICES PRIOR TO DEMOLITION OF ANESTHESIA ROOM 3F-10
D10	TEMPORARY ACCESS DURING CONSTRUCTION
D12	DOOR SHALL REMAIN CLOSED DURING THIS PHASE
D15	CONSTRUCT NEW WALLS PRIOR TO REMOVAL OF CONSTRUCTION BARRIERS
D18	REMOVE AND RELOCATE EXISTING DRINKING FOUNTAIN. TEMPORARILY CAP EXISTING PIPES, SEE PLUMBING DRAWINGS
D20	VACATE THESE SPACES/ ROOMS PRIOR TO PHASE 1
D21	TEMPORARILY REARRANGE WORKSTATIONS TO ACCOMODATE CONSTRUCTION OF PHASE 2. ONCE PHASE 2 IS COMPLETE, MOVE BACK WORKSTATIONS. SAME AMOUNT OF ELECTRICAL AND DATA OUTLETS SHALL BE PROVIDED ON THE NEW WALL
D25	EXISTING ELECTRICAL AND DATA LINES/ OUTLETS SHALL BE RELOCATED TO THE NEW WALL

LEGEND:

- EXISTING CONSTRUCTION TO REMAIN
- EXISTING CONSTRUCTION TO BE DEMOLISHED
- NEW CONSTRUCTION
- TEMPORARY 1- HR CONSTRUCTION BARRIER
- AREA OF BUILDING NOT IN SCOPE OF WORK
- AREA OF DEMOLITION AND CONSTRUCTION

KEY PLAN

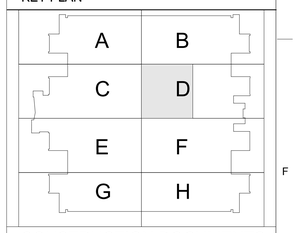

CONSTRUCTION DOCUMENTS FULLY SPRINKLERED

No.	Description	Date
1	SCHEMATIC DESIGN (SD)	10/20/2015
2	DESIGN DEVELOPMENT (DD)	01/18/2016
3	CONSTRUCTION DOCUMENTS (CD)	03/30/2016

CONSULTANTS:

(SEE PROJECT TEAM DIRECTORY ON GI000 COVER SHEET)

Seals and Signatures

LICENSED ARCHITECT — MICHELE B SAQUILAYAN — C 32660 — EXP. 10-31-16 — STATE OF CALIFORNIA

ARCHITECTS/ENGINEERS:

LEO A DALY
PLANNING ARCHITECTURE ENGINEERING INTERIORS
550 South Hope Street, 27th Floor
Los Angeles, California 90071, USA
213-629-0100 F213-629-0070
EST. 1915

Drawing Title: **PHASING PLAN**

Approved: Project Director

Project Title: **CONSTRUCT OPERATING ROOM #8**

Location: 11201 BENTON STREET LOMA LINDA, CA 92357

Date: 03/30/2016 | Checked: MS | Drawn: TV

Project Number: 605-14-640

Building Number: 1

Drawing Number: **GI008**

Office of Construction and Facilities Management

Department of Veterans Affairs

VA FORM 08-6231

9/20/2016 2:12:37 PM C:\Users\mbsaquilayan\Documents\Autodesk Revit 2013 Projects\046-10057-000_Central_mbsaquilayan.rvt

CONSTRUCTION PHASING:

PHASE 4:
- PROVIDE TWO TEMPORARY 'GENERAL INFORMATION' MONITORS PRIOR TO DEMOLITION OF C3-44 SOUTH WALLS
- DEMOLISH EXISTING STAFF LOCKER ROOMS AND MANAGER OFFICE
- REMOVE AND STORE EXISTING WALL MOUNTED EYEWASH. TO BE INSTALLED IN PHASE 5
- CONSTRUCT NEW OPERATING ROOM #8

NOTE: STAFF LOUNGE IS NOT AVAILABLE DURING THIS PHASE
NEW STAFF LOCKERS AND TOILETS SHALL BE OPERABLE PRIOR TO PHASE 4 DEMOLITION

PHASE 5:
- DEMOLISH EXISTING CORRIDOR DOORS
- CONSTRUCT NEW CORRIDOR DOORS
- INSTALL SCRUB SINK AND EYE WASH
- APPLY CORRIDOR FINISHES

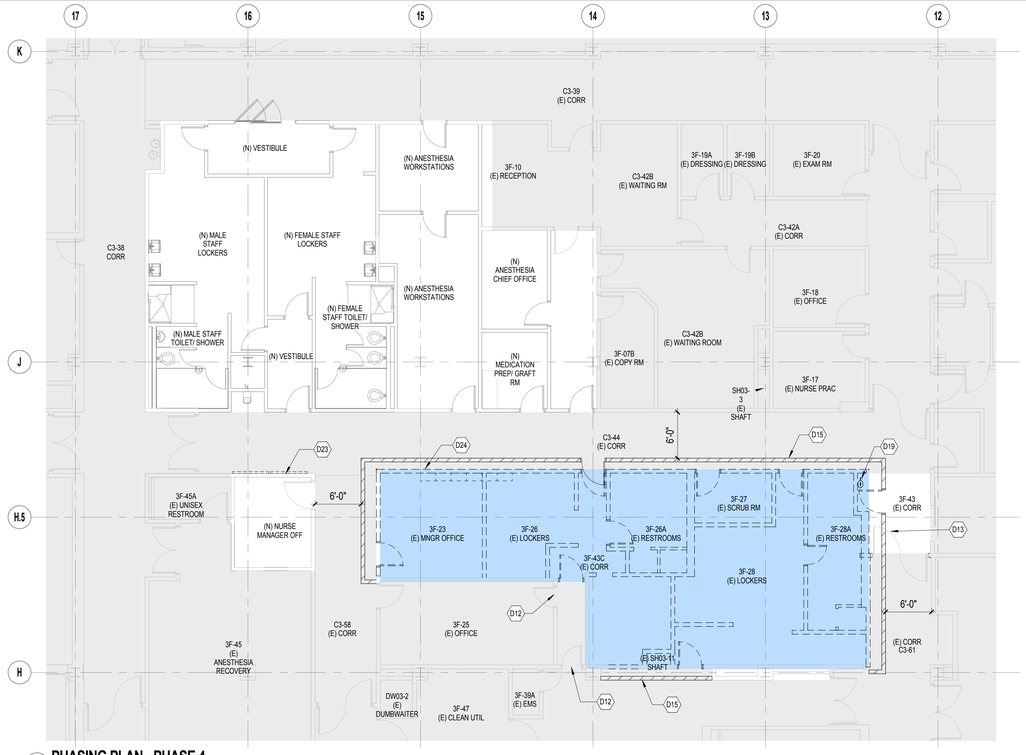

C5 **PHASING PLAN - PHASE 4**
SCALE: 1/8" = 1'-0"

F1 **PHASING PLAN - COMPLETE**
SCALE: 1/8" = 1'-0"

F5 **PHASING PLAN - PHASE 5**
SCALE: 1/8" = 1'-0"

N

0 4' 8' 16'
SCALE : 1/8" = 1'-0"

PLAN NOTES

#	NOTE
1	ALL AREAS OUTSIDE OF THE PROJECT SCOPE MUST REMAIN IN OPERATION THROUGHOUT CONSTRUCTION.
2	THE VA REQUIRES NOTIFICATION OF TEN (10) BUSINESS DAYS PRIOR TO ANY INTERRUPTIONS TO (E) UTILITIES.
3	CODE COMPLIANT EXITING MUST BE MAINTAINED THROUGHOUT CONSTRUCTION. CONSTRUCT ALL TEMPORARY PARTITIONS ACCORDING TO PHASING SCHEDULE.
4	SEE SHEET GI002 FOR INFECTION CONTROL
5	SUBSEQUENT PHASE SHALL NOT COMMENCE UNTIL PRECEDING PHASE IS COMPLETED
6	THE PURPOSE OF THIS DRAWING IS ONLY TO DEMONSTRATE SEQUENCE OF CONSTRUCTION. REFER TO AD101 FOR DEMOLITION NOTES

KENOTES

D01	DEMOLISH AND REMOVE INTERIOR PARTITION WALLS
D02	DEMOLISH AND REMOVE DOOR, DOOR FRAME AND ASSOCIATED DOOR HARDWARE
D12	DOOR SHALL REMAIN CLOSED DURING THIS PHASE
D13	THIS LEAF OF THE DOOR SHALL REMAIN CLOSED DURING THIS PHASE
D15	CONSTRUCT NEW WALLS PRIOR TO REMOVAL OF CONSTRUCTION BARRIERS
D19	REMOVE AND RELOCATE EXISTING WALL MOUNTED EYEWASH. TEMPORARILY CAP EXISTING PIPES, SEE PLUMBING DRAWINGS
D23	PROVIDE TEMPORARY MONITORS (GENERAL INFORMATION MONITORS) PRIOR TO DEMOLITION OF THIS PHASE
D24	REMOVE EXISTING WALL MOUNTED MONITORS, TACKBOARD AND/OR MARKER BOARDS AND FIRE ALARM DEVICES. REINSTALL ALL EQUIPMENT AND DEVICES ON THE SAME LOCATION ONCE NEW WALLS HAVE BEEN CONSTRUCTED.

LEGEND: FLOOR PLAN

- EXISTING CONSTRUCTION TO REMAIN
- EXISTING CONSTRUCTION TO BE DEMOLISHED
- NEW CONSTRUCTION
- TEMPORARY 1- HR CONSTRUCTION BARRIER
- AREA OF BUILDING NOT IN SCOPE OF WORK
- AREA OF DEMOLITION AND CONSTRUCTION

KEY PLAN

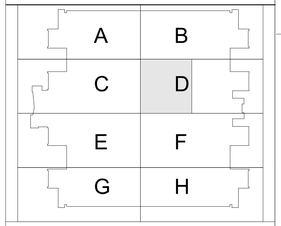

CONSTRUCTION DOCUMENTS
FULLY SPRINKLERED

No.	Description	Date
1	SCHEMATIC DESIGN (SD)	10/20/2015
2	DESIGN DEVELOPMENT (DD)	01/18/2016
3	CONSTRUCTION DOCUMENTS (CD)	03/30/2016

CONSULTANTS:

(SEE PROJECT TEAM DIRECTORY ON GI000 COVER SHEET)

Seals and Signatures

LICENSED ARCHITECT MICHELLE B. SAUDUKHAN C 32660 EXP. 10-31-2016 STATE OF CALIFORNIA

ARCHITECTS/ENGINEERS:

LEO A DALY
PLANNING ARCHITECTURE ENGINEERING INTERIORS
550 South Hope Street, 27th Floor
Los Angeles, California 90071, USA
213-629-0100 F213-629-0070
EST. 1915

Drawing Title: **PHASING PLAN**

Approved: Project Director

Project Title: **CONSTRUCT OPERATING ROOM #8**

Location: 11201 BENTON STREET LOMA LINDA, CA 92357

Date: 03/30/2016 | Checked: Checker | Drawn: Author

Project Number: 605-14-640

Building Number: 1

Drawing Number: **GI008A**

Office of Construction and Facilities Management

Department of Veterans Affairs

VA FORM 08-6231

3/26/2016 2:12:43 PM C:\Users\mbsaputiyan\Documents\Autodesk Revit 2013 Projects\046-10037-000_Central_mbsaputiyan.rvt

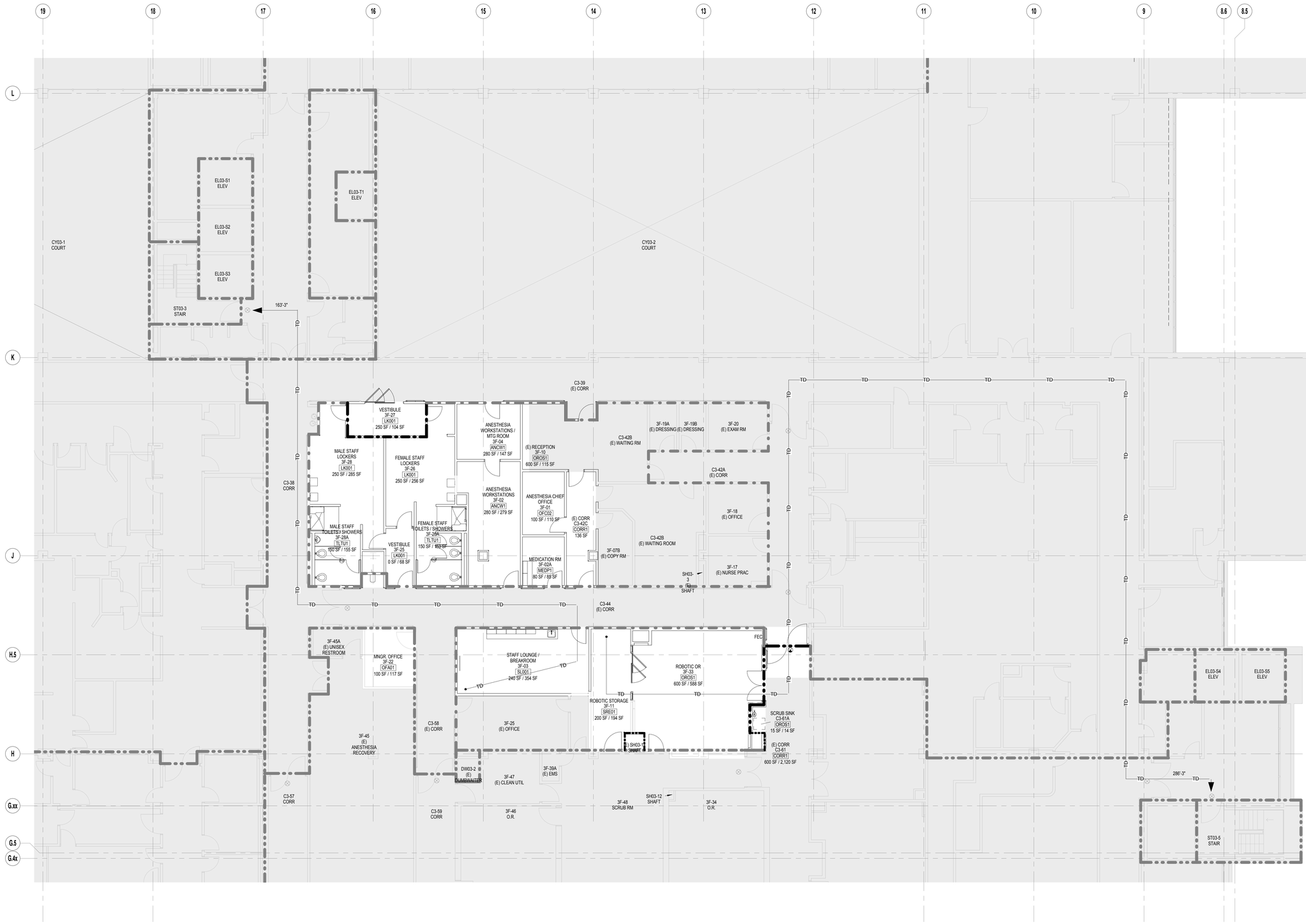

F1 **LIFE SAFETY PLAN - LEVEL 3 - AREA D**
SCALE: 1/8" = 1'-0"

N

0 4' 8' 16'
SCALE : 1/8" = 1'-0"

PLAN NOTES

FOR EXIT LIGHTS AND EMERGENCY LIGHTING, SEE ELECTRICAL DRAWINGS.

FOR FIRE ALARM SYSTEM, SEE FIRE ALARM DRAWINGS.

THE BUILDING SHALL BE FULLY SPRINKLERED, SEE FIRE SPRINKLER SHEETS FOR DETAILS.

WHERE FIRE EXTINGUISHER CABINETS (FEC) OR OTHER EQUIPMENT IS RECESSED IN FIRE RATED PARTITIONS, MODIFY THE PARTITION AS REQUIRED TO PROVIDE A CONTINUOUS ENCLOSURE TO ENSURE UNINTERRUPTED FIRE RATING.

AT FIRE RATED DOOR LOCATIONS FRAMES AND DOORS SHALL BE LABELED FOR THE INTENDED USE OR EQUIVALENT.

NON-RATED SMOKE PARTITIONS SHALL BE CONSTRUCTED TO LIMIT THE TRANSFER OF SMOKE. PARTITIONS SHALL EXTEND FROM FLOOR SLAB TO UNDERSIDE THE FIRE-RESISTANCE RATED HORIZONTAL ASSEMBLY ABOVE. THE SPACE ADJACENT TO THE DECK AND OTHER SURFACES AND THE SPACES AROUND PENETRATING ITEMS SHALL BE CAULKED TO LIMIT THE FREE PASSAGE OF SMOKE.

ALL FIRE RATED BARRIERS SHALL EXTEND FROM FLOOR SLAB TO UNDERSIDE OF INTERSTITIAL FLOOR OR THE DECK ABOVE AS NOTED ON THE ARCHITECTURAL DRAWINGS. THE SPACE ADJACENT TO THE DECK AND OTHER SURFACES, AND THE SPACES AROUND PENETRATING ITEMS SHALL BE FIRESTOPPED.

OCCUPANCY USE TABLE: LEVEL 3

OCCUPANT LOAD CACULATION PER 2015 NFPA 101 PER TABLE 7.3.1.2

OCCUPANT USE TYPE	AREA	OCC. LOAD FACTOR	OCC. LOAD AREA TYPE	OCC. LOAD
	12 SF			
ASSEMBLY	354 SF	15	NET	25
BUSINESS	852 SF	100	NET	9
HEALTHCARE	2708 SF	240	NET	3
Grand total	3926 SF			

LEGEND

- STARTING POINT, EXIT PATH OF TRAVEL
- TD — EXIT PATH OF TRAVEL
- EXISTING CONSTRUCTION TO REMAIN
- NEW CONSTRUCTION
- EXISTING 1-HR RATED WALL TO REMAIN
- NEW 1-HR RATED WALL
- EXISTING 2-HR RATED WALL TO REMAIN
- NEW 2-HR RATED WALL
- AREA OF BUILDING NOT IN SCOPE OF WORK

KEY PLAN

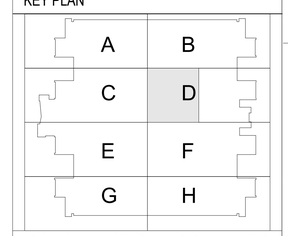

CONSTRUCTION DOCUMENTS
FULLY SPRINKLERED

No.	Description	Date
1	SCHEMATIC DESIGN (SD)	10/20/2015
2	DESIGN DEVELOPMENT (DD)	01/18/2016
3	CONSTRUCTION DOCUMENTS (CD)	03/30/2016

CONSULTANTS:

(SEE PROJECT TEAM DIRECTORY ON GI000 COVER SHEET)

Seals and Signatures

LICENSED ARCHITECT MICHELLE B SADULAYAN No. C 32660 REN. 10-31-16 STATE OF CALIFORNIA

ARCHITECTS/ENGINEERS:

LEO A DALY
PLANNING ARCHITECTURE ENGINEERING INTERIORS
550 South Hope Street, 27th Floor
Los Angeles, California 90071, USA
213-629-0100 F213-629-0070
EST. 1915

Drawing Title: **LIFE SAFETY PLAN - LEVEL 3 - AREA D**

Approved: Project Director

Project Title: **CONSTRUCT OPERATING ROOM #8**

Location: 11201 BENTON STREET LOMA LINDA, CA 92357

Date: 03/30/2016 | Checked: MS | Drawn: TV

Project Number: 605-14-640

Building Number: 1

Drawing Number: **GI009**

Office of Construction and Facilities Management

Department of Veterans Affairs

VA FORM 08-6231

3/30/2016 2:13:47 PM C:\Users\mbsapulayan\Documents\Autodesk Revit 2013 Projects\046-10037-000_Central_mbsapulayan.rvt

C1 VIEW AT MALE STAFF LOCKERS, TOILET AND SHOWER
SCALE: NTS

C5 VIEW AT OPERATING ROOM
SCALE: NTS

F1 VIEW FROM OPERATING ROOM STORAGE
SCALE: NTS

F5 VIEW AT STAFF LOUNGE / BREAK ROOM
SCALE: NTS

SHEET NOTES:

KEYNOTES:

CONSTRUCTION DOCUMENTS
FULLY SPRINKLERED

No.	Description	Date
1	SCHEMATIC DESIGN (SD)	10/20/2015
2	DESIGN DEVELOPMENT (DD)	01/18/2016
3	CONSTRUCTION DOCUMENTS (CD)	03/30/2016

CONSULTANTS:

(SEE PROJECT TEAM DIRECTORY ON GI000 COVER SHEET)

Seals and Signatures

LICENSED ARCHITECT MICHELLE B. SAQUILAYAN No. C 32660 REN. 10-31-16 STATE OF CALIFORNIA

ARCHITECTS/ENGINEERS:

LEO A DALY
PLANNING ARCHITECTURE ENGINEERING INTERIORS
550 South Hope Street, 27th Floor
Los Angeles, California 90071, USA
213-629-0100 F213-629-0070
EST. 1915

Drawing Title
INTERIOR RENDERING PERSPECTIVES

Approved: Project Director

Project Title
CONSTRUCT OPERATING ROOM #8

Location
11201 BENTON STREET
LOMA LINDA, CA 92357

Date	Checked	Drawn
03/30/2016	MS	TV

Project Number
605-14-640

Building Number
1

Drawing Number
GI010

Office of Construction and Facilities Management

Department of Veterans Affairs

VA FORM 08-6231

3/25/2016 3:28:02 PM C:\Users\mbsaquilayan\Documents\Autodesk\Revit 2013 Projects\046-10057-000_Central_mbsaquilayan.rvt

INSPECTION / TESTING

1. CONTINUOUS SPECIAL INSPECTION IS REQUIRED PER CBC 2013 CHAPTER 17.

2. STEEL TESTING SHALL BE PROVIDED AS REQUIRED BY THE CBC INCLUDING BUT NOT LIMITED TO:

2.1 ALL STEEL SHALL BE IDENTIFIED AS REQUIRED BY THE CBC. MANUFACTURER'S MILL ANALYSES AND TEST REPORTS SHALL BE PROVIDED FOR THE STEEL. REFER TO PROJECT SPECIFICATIONS SECTION 05120 FOR SOURCE QUALITY CONTROL REQUIREMENTS.

2.2 ULTRASONIC TESTING IS REQUIRED FOR ALL (100%) PARTIAL AND COMPLETE PENETRATION WELDS. TESTING SHALL BE PERFORMED 24 HOURS OR MORE AFTER COMPLETION OF WELDING.

2.3 BASE METAL THICKER THAN 1-1/2", SUBJECTED TO THROUGH THICKNESS WELD SHRINKAGE, SHALL BE ULTRASONICALLY TESTED DIRECTLY BEHIND SUCH WELDS 24 HOURS OR MORE AFTER COMPLETION OF WELDING.

2.4 TEST BY CALIBRATED TORQUE WRENCH A MINIMUM OF ONE (1) HIGH STRENGTH BOLT AT EACH SHEAR CONNECTION, A MINIMUM OF TWO (2) BOLTS PER CONNECTION FOR CONNECTION WITH 8 BOLTS OR MORE.

2.5 ALL HEAVY SECTION COLUMN FLANGES LOCATED A THE WELDED CONNECTIONS SHALL BE ULTRASONICALLY EXAMINED, PRIOR TO WELDING, FOR THE EVIDENCE OF LAMINATIONS, INCLUSIONS OR OTHER DISCONTINUITIES. TESTING SHALL BE IN ACCORDANCE ASTM A898 (STRAIGHT BEAM ULTRASONIC EXAMINATION OF ROLLED STEEL STRUCTURAL SHAPES). THE AREA TO BE TESTED IS A ZONE 6" ABOVE AND BELOW EACH BEAM CONNECTION. ASTM 898 LEVEL 1 CRITERIA IS APPLICABLE.

2.6 HIGH STRENGTH BOLTS, NUTS AND WASHERS SHALL BE SAMPLED AND TESTED BY AN APPROVED INDEPENDENT TESTING LABORATORY FOR CONFORMANCE WITH THE APPROPRIATE ASTM STANDARD.

2.7 END WELDED STUDS SHALL BE SAMPLED, TESTED AND INSPECTED PER THE REQUIREMENTS OF THE STRUCTURAL WELDING CODE – STEEL, 1998 EDITION, PUBLISHED BY THE AMERICAN WELDING SOCIETY.

2.8 RANDOM TESTING OF SLIP CRITICAL BOLTS: TORQUE TEST BY CALIBRATED TORQUE WRENCH AT LEAST 10% OF BOLTS AT RANDOM SLIP CRITICAL BOLTED CONNECTIONS TO BE IDENTIFIED BY SEOR.

3. CONCRETE TESTING SHALL BE PROVIDED AS REQUIRED BY CBC SECTION 1905.

4. APPROVAL BY THE INSPECTOR DOES NOT MEAN APPROVAL OR FAILURE TO COMPLY WITH THE PLANS OR SPECIFICATIONS. ANY DETAIL THAT FAILS TO BE CLEAR OR IS AMBIGUOUS MUST BE REFERRED TO THE STRUCTURAL ENGINEER FOR INTERPRETATION OR CLARIFICATION.

MECHANICAL ANCHORS

1. EXPANSION OR WEDGE ANCHORS INTO CONCRETE: HILTI KB-TZ (ICC ESR-1917). INSTALL PER ESR REPORT AND MANUFACTURER'S RECOMMENDATIONS.

2. PROVIDE GALVANIZED CARBON STEEL OR STAINLESS STEEL ANCHORS FOR EXTERIOR USE OR WHEN EXPOSED TO WEATHER.

3. IF REINFORCEMENT IS ENCOUNTERED DURING DRILLING, ABANDON AND SHIFT THE HOLE LOCATION TO AVOID THE REINFORCEMENT. PROVIDE A MINIMUM OF 2 ANCHOR DIAMETER OR 1 INCH, WHICHEVER IS LARGER, OF SOUND CONCRETE BETWEEN THE DOWEL AND THE ABANDONED HOLE, FILL THE ABANDONED HOLE WITH NON-SHRINK GROUT. IF THE ANCHOR OR DOWEL MAY NOT BE SHIFTED AS NOTED ABOVE, THE ENGINEER WILL DETERMINE A NEW LOCATION.

4. LOCATE REINFORCEMENT AND CONFIRM FINAL ANCHOR LOCATIONS PRIOR TO FABRICATING PLATES, MEMBERS, OR OTHER STEEL ASSEMBLIES ATTACHED WITH MECHANICAL ANCHORS.

5. MINIMUM EMBEDMENT OF ANCHORS, UNLESS OTHERWISE NOTED:

ANCHOR DIAMETER	WEDGE EMBED
3/8"	2-5/8"
1/2"	2-5/8"
1/2"	4"
5/8"	3-3/4"
5/8"	4-3/4"
3/4"	4-1/2"
3/4"	5-3/4"

6. ANCHORS WILL BE PROOF-TESTED BY OWNER'S TESTING AND INSPECTION AGENCY.

7. TESTS & INSPECTION FOR MECHANICAL ANCHORS:
   A. THE TEST LOAD MAY BE APPLIED BY ANY METHOD THAT WILL EFFECTIVELY TRANSMI A MEASURED TENSION LOAD TO THE ANCHOR. ACCEPTABLE METHODS INCLUDE:
      i. HYDRAULIC JACK, EITHER UNCONFINED OR CONFINED TESTING.
      ii. CALIBRATED SPRING LOADED DEVICES.
      iii. CALIBRATED TORQUE WRENCH FOR TORQUE-CONTROLLED EXPANSION ANCHORS. INTERNALLY THREADED SHELL-TYPE ANCHORS AND DISPLACEMENT-CONTROLLED ANCHORS (E.G., DROP-IN ANCHORS), SCREW ANCHORS, AND ADHESIVE ANCHORS SHALL NOT BE TESTED USING A TORQUE WRENCH. SCREW ANCHORS MAY BE LOOSENED A MAXIMUM OF ONE FULL TURN TO FACILITATE THE POSITIONING OF A TENSION TEST COLLAR. FOLLOWING THE TENSION TEST, THE ANCHOR SHALL BE RE-TORQUED IN ACCORDANCE WITH THE MANUFACTURER'S INSTALLATION INSTRUCTIONS.
      REQUIRED TEST LOADS SHALL BE DETERMINED BY ONE OF THE FOLLOWING METHODS:
         a. ONE AND ONE-HALF (1-1/2) TIMES THE CALCULATED DESIGN STRENGTH FOR STATIC TENSION LOAD OR TWO TIMES DESIGN STRENGTH FOR SEISMIC TENSION LOADS AS DETERMINED IN ACCORDANCE WITH APPENDIX D OF ACI318 (NOT APPLICABLE TO SCREW ANCHORS) USING COEFFICIENT OF BASIC CONCRETE BREAKOUT STRENGTH IN TENSION (Kc=17)
         b. TWICE THE MAXIMUM ALLOWABLE TENSION LOAD OR ONE AND A QUARTER (1-1/4) TIMES THE MAXIMUM DESIGN STRENGTH OF ANCHORS AS PROVIDED IN ICC-ESR.
         c. THE MANUFACTURER'S RECOMMENDED INSTALLATION TORQUE OR RECOMMENDED TORQUE IN ICC-ESR (NOT APPLICABLE TO DISPLACEMENT-CONTROLLED ANCHORS AND SCREW ANCHORS).

   B. ACCEPTANCE CRITERIA:
      i. HYDRAULIC RAM METHOD: ANCHORS TESTED WITH A HYDRAULIC JACK OR SPRING LOADED DEVICES SHALL MAINTAIN THE TEST LOAD FOR A MINIMUM OF 15 SECONDS AND SHALL EXHIBIT NO DISCERNABLE MOVEMENT DURING THE TENSION TEST, E.G., AS EVIDENCED BY LOOSENING OF THE WASHER UNDER THE NUT.
      ii. TORQUE WRENCH METHOD: ANCHORS TESTED WITH A CALIBRATED TORQUE WRENCH MUST ATTAIN THE SPECIFIED TORQUE WITHIN 1/2 TURN OF THE NUT.

TEST VALUES: SIMPSON STRONG-BOLT 2 ESR-3037 (HARD ROCK OR LIGHT-WEIGHT CONCRETE)

ANCHOR DIA (IN)	EMBED (IN)	TORQUE LOAD (FT-LBS)
3/8	2-5/8	25
1/2	2-5/8	40
1/2	4	40
5/8	3-3/4	60
5/8	4-3/4	60
3/4	4-1/2	110
3/4	5-3/4	110

STRUCTURAL OBSERVATION

PERIODIC STRUCTURAL OBSERVATION SHALL BE PROVIDED BY NABIH YOUSSEF & ASSOCIATES, STRUCTURAL ENGINEERS, PER CBC CHAPTER 17, FOR THE WORK INDICATED BELOW. CONTRACTOR SHALL NOTIFY ENGINEER 48 HOURS BEFORE REQUIRED OBSERVATIONS. DELINQUENT NOTIFICATION MAY REQUIRE DEMOLITION OF COVERING MATERIAL TO FACILITATE OBSERVATION.

1. FIRST ERECTION OF STRUCTURAL STEEL
2. FIRST INSTALLATION OF ANCHOR BOLTS
3. FIRST INSTALLATION OF MECHANICAL AND ADHESIVE ANCHORS

STRUCTURAL STEEL

1. FABRICATION AND ERECTION OF STRUCTURAL STEEL SHALL BE IN ACCORDANCE WITH THE AISC SPECIFICATIONS FOR STRUCTURAL STEEL BUILDINGS (360-05 & 341-05) WHERE THE STRUCTURAL STEEL IS EXPOSED, FABRICATION AND ERECTION SHALL ALSO BE IN ACCORDANCE WITH AISC CODE OF STANDARD PRACTICE FOR ARCHITECTURALLY EXPOSED STRUCTURAL STEEL.

2. STRUCTURAL STEEL SHALL CONFORM TO ASTM DESIGNATION AS INDICATED BELOW (U.N.O.). PAINTING OF STEEL IS NOT REQUIRED STRUCTURALLY. VARIATION IN THE YIELD STRENGTH BELOW THE SPECIFIED MINIMUM VALUE IS NOT ALLOWED:

ALL W SHAPES (U.N.O.)	A992, (A193, GRADE 65 WHERE NOTED)
ALL OTHER STRUCTURAL SECTIONS A572, GRADE 50 (A36 WHERE NOTED)	
PLATES	A572, GRADE 50 (GRADE 42 IF $\geq$ 4" THICK)
STRUCTURAL TUBING	A500, GRADE B (Fy=46ksi)
PIPE COLUMNS	A53, GRADE B (Fy=42ksi)
ANCHOR BOLTS	F1554 GRADE 36
STAIR CHANNELS, PLATES, SHAPES, BARS	A36 / A36M U.N.O.

3. MEMBERS IN THE SEISMIC FORCE RESISTING SYSTEM INCLUDE BRACED FRAME COLUMNS, BRACED FRAME BEAMS, BRACES, DRAG BEAMS, MOMENT FRAME BEAMS, AND MOMENT FRAME COLUMNS.

4. HEAVY STRUCTURAL SECTIONS INCLUDE, ASTM A6 GROUP 3 SHAPES WITH FLANGES 1 1/2" THICK OR THICKER, ASTM A6 GROUP 4 AND 5 SHAPES, AND PLATES THAT ARE 1 1/2" THICK OR THICKER IN BUILT-UP CROSS-SECTIONS.

5. HEAVY STRUCTURAL SECTIONS AND ALL BRACED FRAME COLUMNS SHALL BE SUPPLIED WITH TESTING IN ACCORDANCE WITH ASTM A6 SUPPLEMENTARY REQUIREMENT S5 AND SHALL HAVE A MINIMUM CHARPY V-NOTCH (CVN) TOUGHNESS OF 20 FT/LBS AT 70 DEGREES FAHRENHEIT

6. HIGH STRENGTH BOLTS SHALL BE INSTALLED IN ACCORDANCE WITH THE CURRENT (DESIGN) EDITION OF AISC SPECIFICATIONS FOR STRUCTURAL JOINTS USING ASTM A325 OR A490 BOLTS. HIGH STRENGTH BOLTS SHALL BE BEARING TYPE WITH THREADS EXCLUDED FROM THE FROM THE SHEAR PLANES (I.E. A325-X) UNLESS NOTED OTHERWISE. SLIP CRITICAL BOLTS SHALL BE USED FOR MOMENT AND DRAG CONNECTIONS.

7. ALL BOLTED CONNECTIONS SHALL HAVE A MINIMUM OF TWO BOLTS UNLESS SHOWN OTHERWISE. MINIMUM SIZE OF BOLTS FOR STRUCTURAL STEEL CONNECTIONS SHALL BE 7/8" DIA. EXCEPT WHEN OTHERWISE SHOWN OR NOTED.

8. WHEN FABRICATING BEAMS PLACE NATURAL CAMBER UP.

9. ALL FLANGE STIFFENER PLATES SHALL BE MADE FROM BI-DIRECTIONALLY ROLLED STEEL PLATE.

10. CONDITION OF STEEL ON DELIVERY SHALL BE PER THE CURRENT (DESIGN) EDITION OF AISC SPECIFICATIONS FOR STRUCTURAL STEEL BUILDINGS.

11. SEE ARCHITECTURAL PLANS FOR DETAILS OF FIREPROOFING.

12. ALL HOLES SHALL BE STANDARD DIAMETER U.N.O.

13. INSTALL BOLTS/EXPANSION ANCHORS IN CONCRETE AND FIELD VERIFY AS-BUILT LOCATIONS PRIOR TO FABRICATION OF BOLT HOLES IN NEW STEEL MEMBERS. AT CONTRACTOR OPTION, OVERSIZED HOLES AND WELDED PLATE WASHERS CAN BE USED IN LIEU OF STANDARD DIAMETER HOLES.

14. PROVIDE FILLS AT SPLICES OF PARTS HAVING MORE THAN 1/8" DIFFERENCE IN THICKNESS.

15. PROVIDE BEVELED WASHERS ON ALL CONNECTIONS WHERE SLOPE SURFACE EXCEEDS 1:20.

16. SHEAR CONNECTORS SHALL BE NELSON GRANULAR FLUX-FILLED HEADED ANCHOR STUDS OR AN APPROVED EQUAL, SHALL BE MADE FROM COLD FINISHED LOW CARBON STEEL, AND SHALL CONFORM TO A-108, GRADES 1015 – 1020 WITH A MINIMUM TENSILE STRENGTH OF 60,000 PSI. STUD WELDING INSPECTION AND TESTING SHALL CONFORM TO AWS D1.1.

17. DEFORMED BAR ANCHOR STUDS SHALL BE NELSON D2L, ICBO ESR-5217, GRANULAR FLUX-FILLED REBAR STUDS OR APPROVED EQUAL, AND SHALL BE MADE OF LOW CARBON COLD ROLLED STEEL WITH A MINIMUM TENSILE STRENGTH OF 80,000 PSI. STUD WELDING INSPECTION AND TESTING SHALL CONFORM TO AWS D1.1.

18. SPLICE MEMBERS ONLY WHERE INDICATED.

19. STRESSES AT ALL TIMES SHALL BE LESS THAN DESIGN AND ALLOWABLE STRESSES. THE FULL DESIGN AND LOAD CARRYING CAPACITY OF THE STEELWORK SHALL NOT BE IMPAIRED DUE TO FABRICATION, SHIPMENT, OR ERECTION PROCEDURES, THROUGHOUT THE COMPLETE PROCESS. THE STABILITY OF ALL INDIVIDUAL MEMBERS AND ASSEMBLIES SHALL BE MAINTAINED.

20. THE CONTRACTOR SHALL BE RESPONSIBLE FOR THE CONTROL OF ALL ERECTION PROCEDURES AND SEQUENCES WITH RELATION TO TEMPERATURE DIFFERENTIALS AND WELD SHRINKAGE. CONTRACTOR TO SUBMIT WELDING SEQUENCE PROCEDURE FOR APPROVAL BY SEOR.

21. ALL ADDITIONAL STEEL REQUIRED FOR ERECTION PURPOSES SHALL BE PROVIDED AT NO ADDITIONAL COST AND SHALL BE REMOVED UNLESS APPROVED BY THE OWNER IN WRITING.

22. ALL BASE PLATE TO BE FULLY GROUTED AND REACHES 28 DAYS STRENGTH PRIOR TO FIRST ELEVATED DECK POUR

23. ALL ANCHOR BOLTS IN BASE PLATES WITH OVERSIZED HOLES SHALL HAVE 3-1/2 IN. SQ. WASHER PLATES UNO. THICKNESS OF WASHER PLATES SHALL BE 0.375 TIMES THE DIAMETER OF THE ANCHOR BOLTS. PLATE WASHERS SHALL BE WELDED TO BASE PLATE WITH 5/16" FILLET WELD ON ALL SIDES.

24. ANCHOR BOLTS TO HAVE DOUBLE NUT ON EMBEDED SIDE U.N.O.

ADHESIVE ANCHORS

1. "EPOXY ANCHORS/BOLTS" SHALL BE ASTM A193 THREADED ROD AND INSTALLED USING HILTI HIT-HY150 (ICBO ESR-3013) WITH DIAMETER AND EMBEDMENT LENGTH AS NOTED ON THE DRAWINGS. INSTALL PER MANUFACTURER'S RECOMMENDATIONS.

2. REINFORCEMENT DOWELS NOTED "DRILL AND EPOXY" SHALL BE INSTALLED USING HILTI HIT-HY150 (ICBO ESR-3013) WITH EMBEDMENT LENGTH AS NOTED ON THE DRAWINGS. INSTALL PER MANUFACTURER'S RECOMMENDATIONS.

3. WHEN INSTALLING ANCHORS IN EXISTING REINFORCED CONCRETE EXERCISE CAUTION TO AVOID CUTTING OR DAMAGING THE EXISTING REINFORCING BARS.

4. TEST 100% OF EPOXY DOWELS PER THE FOLLOWING METHOD:
HYDRAULIC RAM METHOD: APPLY PROOF TEST LOAD WITHOUT REMOVING THE NUT INSTALLED, REPLACE THE NUT WITH A THREADED COUPLER TO THE SAME TORQUE MEASURED WITH A TORQUE WRENCH, AND THEN APPLY THE LOAD. ANCHOR IS ACCEPTABLE IF NO MOVEMENT IS OBSERVED AT THE TEST LOAD. MOVEMENT MAY BE DETERMINED WHEN THE WASHER UNDER THE NUT BECOMES LOOSE.
EXCEPTION: WHEN ANCHORS ARE USED FOR NONSTRUCTURAL APPLICATIONS SUCH AS EQUIPMENT ANCHORAGE, 50% OR ALTERNATE BOLTS IN A GROUP SHALL BE TESTED.

STRUCTURAL STEEL WELDING

1. ALL WELDING SHALL BE IN STRICT CONFORMANCE WITH THE 2004 EDITION OF AWS D1.1, THE 2005 D1.8 SEISMIC SUPPLEMENT, AND THE CALIFORNIA BUILDING CODE. ALL WELDING PROCEDURES SHALL BE APPROVED BY OSHPD.

2. ALL WELDING ELECTRODES (FILLER METAL) SHALL BE E7XXX (70 KSI) OR E70TXXXX (70 KSI) AS REQUIRED FOR INTENDED USE, U.N.O., AND SHALL BE LOW HYDROGEN TYPES.

3. ALL WELDS SHALL HAVE A FILLER METAL WITH A MINIMUM CHARPY V-NOTCH TOUGHNESS OF 20 FT/LBS AT -20 DEGREES FAHRENHEIT AND 40 FT/LBS @ 70 DEGREES FAHRENHEIT CERTIFY CONFORMANCE TO CHARPY V-NOTCH TOUGHNESS REQUIREMENTS WITH TESTS BY AN INDEPENDENT TESTING LABORATORY.

4. LENGTHS OF WELDS ARE EFFECTIVE LENGTHS AS SPECIFIED IN THE CALIFORNIA BUILDING CODE. WHERE LENGTH OF WELD IS NOT SHOWN IT SHALL BE FULL LENGTH OF JOINT. ALL BUTT WELDS SHALL BE FULL PENETRATION, UNLESS NOTED OTHERWISE.

5. ALL SHOP WELDS SHALL BE PERFORMED BY A LICENSED FABRICATOR.

6. ALL WELDERS SHALL BE QUALIFIED FOR THE WORK THEY WILL BE DOING & SHALL HAVE CERTIFICATIONS CURRENT.

7. FACES OF FILLET WELDS EXPOSED TO VIEW SHALL HAVE AS-WELDED SURFACES THAT REQUIRE NO FINISHING OR GRINDING EXCEPT WHERE CLEARANCES OR FIT OF OTHER ITEMS MAY SO NECESSITATE.

8. ALL PARTIAL AND FULL PENETRATION WELDS WHICH ARE EXPOSED TO VIEW SHALL BE IN ACCORDANCE WITH AISC COMMENTARY ON AESS.

9. CLEAN GROOVE PREPARATION THERMAL CUTS BY GRINDING.

10. WELDS SHALL BE TERMINATED AT THE END OF A JOINT IN A MANNER THAT WILL ENSURE SOUND WELDS. WHENEVER NECESSARY THIS SHALL BE DONE BY USE OF EXTENSION BARS AND WELD TABS, PER AWS D1.1-9 SECTION 5.31, ALIGNED IN SUCH A MANNER TO PROVIDE AN EXTENSION OF THE JOINT PREPARATION.

11. THE CONTRACTOR SHALL SUBMIT ALL WELDING PROCEDURE SPECIFICATIONS (WPS) TO BE USED ON THE PROJECT PER THE CURRENT (DESIGN) EDITION OF AWS D1.1. FOR ALL WPS THAT ARE NOT PREQUALIFIED PER AWS D1.1, THE SUPPORTING PROCEDURE QUALIFICATION RECORD (POR) SHALL ALSO BE SUBMITTED WITH THE WPS. THE WPS SHALL INCLUDE ALL MANUFACTURER'S DATA SHEETS FOR ALL WELDING MATERIALS TO BE USED. THE DATA SHEETS SHALL DESCRIBE THE PRODUCTS, LIMITATIONS OF USE, RECOMMENDED WELDING PARAMETERS, AND STORAGE AND EXPOSURE REQUIREMENTS.

12. THE CONTRACTOR SHALL PROVIDE PLANS SHOWING THE SEQUENCE OF WELDING PLANNED TO MINIMIZE LOCKED IN STRESSES AND DISTORTION IN THE STEEL FRAMING.

13. LOW HYDROGEN SMAW ELECTRODES SHALL BE RECEIVED AND STORED IN THE ORIGINAL, UNDAMAGED MANUFACTURER PACKAGING, UNTIL READY FOR USE. WHEN WELDING IS TO BE SUSPENDED FOR MORE THAN 8 HOURS, ELECTRODES SHALL BE REMOVED FROM THE MACHINES AND STORED IN AN ELECTRODE WIRE OVEN MAINTAINED AT A TEMPERATURE BETWEEN 250 DEGREES AND 550 DEGREES OR AS RECOMMENDED BY THE MANUFACTURER. ELECTRODES NOT CONSUMED WITHIN 24 HOURS OF ACCUMULATED EXPOSURE OUTSIDE CLOSED OR HEATED STORAGE SHALL NOT BE USED. FLUX CORED ELECTRODES SHALL BE RECEIVED AND STORED PER AWS D1.1.

14. BACKING BAR FOR THE BOTTOM FLANGE OF BEAM TO COLUMN CONNECTIONS TO BE REMOVED. FOLLOWING REMOVAL OF BACKING, THE ROOT PASS SHALL BE BACKGOUGED TO SOUND WELD METAL AND BACKWELDED UNTIL FLUSH OR WITH SLIGHT REINFORCEMENT.

WHERE WELD TABS ARE USED, THEY SHALL BE REMOVED & THE SURFACE SHALL BE GROUND SMOOTH TO A SURFACE ROUGHNESS NOT TO EXCEED 500 MICROINCHES.

15. MINIMUM PREHEAT AND INTERPASS TEMPERATURES SHALL BE PROVIDED FOR ALL WELDS, INCLUDING TACK WELDS, IN ACCORDANCE WITH AWS D1.1 AND D1.8, THE MAXIMUM PREHEAT AND MAXIMUM INTERPASS TEMPERATURE PERMITTED IS 550 DEGREES FAHRENHEIT, MEASURED AT A DISTANCE OF 1" FROM THE POINT OF ARC INITIATION.

METAL DECK

1. STEEL DECK, ICBO ER-2757 & ER-2078, SHALL HAVE MINIMUM PROPERTIES AND BE THE TYPE AS INDICATED ON DRAWINGS.

2. MINIMUM "S" AND "I" VALUES SHALL BE DETERMINED ACCORDING TO THE "LIGHT GAUGE STEEL INSTITUTE".

METAL DECK							
METAL DECK THICKNESS (IN)	GAGE	WEIGHT (PSF)		I (IN^4)	+S (IN^3)	-S (IN^3)	REMARKS
		GALVANIZED	PHOSPATIZED/ PAINTED				
3"	16	3.5	3.3	1.509	1.509	0.96	W3
2"	18	2.7	2.5	0.555	0.555	0.511	W2
1 1/2"	18	2.9	2.8	0.302	0.302	0.335	HSB-36

3. ALL STEEL DECK SHALL BE CONTINUOUS OVER AT LEAST TWO SPANS EXCEPT WHERE UNAVOIDABLE DUE TO BUILDING CONFIGURATION.

4. ALL WELDING OF STEEL DECK SHALL BE PERFORMED BY CERTIFIED LIGHT GAUGE WELDERS.

5. PRIOR TO CONCRETE POUR, SMALL OPENINGS SHALL BE BLOCKED OUT AND FORMLOK LEFT INTACT. HOLES LESS THAN 6" IN DIAMETER AND CUTTING NO MORE THAN ONE WEB OF THE METAL DECK NEED NO REINFORCING. AFTER THE CONCRETE HAS CURED, THE BLOCKOUT CAN BE REMOVED AND THE FORMLOK IN THE AREA OF THE HOLE REMOVED. ALL HOLES GREATER THAN 6" DIAMETER OR CUTTING MORE THAN ONE WEB OF THE METAL DECK SHALL BE REINFORCED PER THE TYPICAL DETAILS.

SHEET LIST

SE001	GENERAL NOTES
SE101	FLOOR PLAN – LEVEL 3 – AREA D
SE102	INTERSTITIAL FLOOR PLAN – LEVEL 3 – AREA D
SE400	SECTIONS & DETAILS
SE500	EQUIPMENT ANCHORAGE SCHEDULES & DETAILS

GENERAL

1. ALL NEW CONSTRUCTION SHALL COMPLY WITH THE CONTRACT DOCUMENTS AND THE FOLLOWING: 2013 CALIFORNIA BUILDING CODE.

2. TYPICAL DETAILS AND GENERAL NOTES APPLY TO ALL PARTS OF THE WORK EXCEPT WHERE SPECIFICALLY DETAILED OR UNLESS NOTED OTHERWISE (U.N.O.).

3. THE STRUCTURAL DRAWINGS ILLUSTRATE THE STRUCTURAL MEMBERS. REFER TO ARCHITECTURAL, MECHANICAL AND ELECTRICAL DRAWINGS FOR NON-STRUCTURAL ITEMS WHICH REQUIRE SPECIAL PROVISIONS DURING THE CONSTRUCTION OF THE STRUCTURAL MEMBERS.

4. THE CONTRACTOR SHALL VERIFY AND BE RESPONSIBLE FOR ALL DIMENSIONS AND CONDITIONS WHICH IMPACT THE WORK. FIELD VERIFY SIZES, ELEVATIONS, HOLE LOCATIONS, ETC. PRIOR TO FABRICATION.

5. DRAWING DIMENSIONS ARE TO FACE OF FINISH, JOINT CENTERLINE OR COLUMN GRID CENTERLINE UNLESS NOTED OTHERWISE. DO NOT SCALE THE DRAWINGS.

6. CONTRACTOR SHALL CAREFULLY REVIEW THE DRAWINGS TO IDENTIFY THE SCOPE OF WORK REQUIRED. VISIT THE SITE TO RELATE THE SCOPE OF WORK TO EXISTING CONDITIONS AND DETERMINE THE EXTENT TO WHICH THOSE CONDITIONS AND PHYSICAL SURROUNDINGS WILL IMPACT THE WORK.

7. THE CONTRACTOR SHALL RESOLVE ANY CONFLICTS ON THE DRAWINGS OR IN THE SPECIFICATIONS WITH THE ARCHITECT/ENGINEER BEFORE PROCEEDING WITH THE WORK.

8. ANY DEVIATION, MODIFICATION & SUBSTITUTION FROM THE APPROVED SET OF STRUCTURAL DRAWINGS SHALL BE SUBMITTED TO THE OWNER, ARCHITECT, ENGINEER AND GOVERNING CODE AUTHORITY FOR REVIEW/APPROVAL PRIOR TO ITS USE OR INCLUSION ON THE SHOP DRAWINGS.

9. THE CONTRACTOR SHALL PROVIDE ALL NECESSARY SHORES, BRACES AND GUYS REQUIRED TO SUPPORT ALL LOADS TO WHICH THE BUILDING STRUCTURE AND COMPONENTS, SOILS, OTHER STRUCTURES AND UTILITIES MAY BE SUBJECTED DURING CONSTRUCTION. SHORING SYSTEMS SHALL BE DESIGNED AND STAMPED BY A CIVIL ENGINEER LICENSED IN THE STATE OF CALIFORNIA.

10. THE CONTRACTOR SHALL PROVIDE MEANS, METHOD, TECHNIQUES, SEQUENCE AND PROCEDURE OF CONSTRUCTION AS REQUIRED.

11. KEY AND DOWEL POUR JOINTS AS SHOWN ON THE PLANS. ANY DEVIATION FROM POUR JOINTS SHOWN ON THE PLANS MUST BE APPROVED BY THE ENGINEER.

12. THE CONTRACTOR SHALL PROTECT ALL WORK, MATERIALS AND EQUIPMENT FROM DAMAGE AND SHALL PROVIDE PROPER STORAGE FACILITIES FOR MATERIALS AND EQUIPMENT DURING CONSTRUCTION.

13. SITE VISITS PERFORMED BY ARCHITECT/ENGINEER DO NOT INCLUDE INSPECTIONS OF MEANS AND METHODS OF CONSTRUCTION PERFORMED BY CONTRACTOR.

14. STRUCTURAL OBSERVATIONS PERFORMED BY ARCHITECT/ENGINEER DURING CONSTRUCTION ARE NOT THE CONTINUOUS AND SPECIAL INSPECTION SERVICES AND DO NOT WAIVE THE RESPONSIBILITY FOR THE INSPECTIONS REQUIRED OF THE BUILDING INSPECTOR OR THE DEPUTY INSPECTOR. OBSERVATIONS ALSO DO NOT GUARANTEE CONTRACTOR'S PERFORMANCE AND SHALL NOT BE CONSIDERED AS SUPERVISION OF CONSTRUCTION.

15. CONTRACTORS SHALL REVIEW SHOP DRAWINGS FOR COMPLETENESS AND COMPLIANCE WITH CONTRACT DOCUMENTS. CONTRACTOR SHALL STAMP SHOP DRAWINGS PRIOR TO SUBMISSION TO ARCHITECT AND ENGINEER.

16. ARCHITECT'S/ENGINEER'S REVIEW OF THE SHOP DRAWINGS SHALL NOT BE CONSTRUED AS AN AUTHORIZATION TO DEVIATE FROM CONTRACT DOCUMENTS.

17. SHOP DRAWINGS WILL NOT BE PROCESSED DUE TO INCOMPLETENESS, LACK OF CO-ORDINATION WITH RELEVANT PORTION OF CONTRACT DOCUMENTS, LACK OF CALCULATIONS IF REQUIRED AND WHERE DEVIATIONS, MODIFICATIONS AND SUBSTITUTIONS ARE INDICATED WITHOUT PRIOR WRITTEN APPROVAL FROM ARCHITECT/ENGINEER.

18. ALLOW TEN WORKING DAYS FOR PROCESSING SHOP DRAWINGS AFTER RECEIPT BY ENGINEER.

19. CONCRETE CORING SHALL NOT BE PERFORMED WITHOUT PRIOR WRITTEN APPROVAL OF THE ENGINEER.

20. ALL EXISTING CONDITIONS MUST BE VERIFIED AND CONFIRMED IN FIELD BY CONTRACTOR.

CODE

1. BUILDING SHALL COMPLY WITH THE 2013 EDITION OF THE CALIFORNIA BUILDING CODE

2. LATERAL LOADS

SEISMIC: AS PER THE 2013 CALIFORNIA BUILDING CODE
SITE CLASS = D
Fa = 1.0
Fv = 1.5
S_DS = 1.596
S_D1 = 1.096
IMPORTANCE FACTOR, I = 1.5

CONSTRUCTION DOCUMENTS
FULLY SPRINKLERED

No.	Description	Date
1	SCHEMATIC DESIGN (SD)	10/20/2015
2	DESIGN DEVELOPMENT (DD)	01/18/2016
3	CONSTRUCTION DOCUMENTS (CD)	03/30/2016

CONSULTANTS:
NABIH YOUSSEF
STRUCTURAL ENGINEERS
550 S. HOPE ST. SUITE 1700
LOS ANGELES, CALIF. 90071
T: 213.362.0707 • F: 213.688.3099
LOS ANGELES • IRVINE • SAN FRANCISCO

Seals and Signatures

ARCHITECTS/ENGINEERS:
LEO A DALY
PLANNING
ARCHITECTURE
ENGINEERING
INTERIORS
550 South Hope Street, 27th Floor
Los Angeles, California 90071, USA
213-629-0100 F213-629-0070
EST. 1915

Drawing Title
GENERAL NOTES

Approved: Project Director

Project Title
CONSTRUCT OPERATING ROOM #8

Location
11201 BENTON STREET,
LOMA LINDA, CA 92357

Date	Checked	Drawn
03/30/2016	AP	MR

Project Number
605-14-640

Building Number
1

Drawing Number
SE001

Office of Construction and Facilities Management
Department of Veterans Affairs

VA FORM 08-6231

3/29/2016 4:20:40 PM X:\2014\14252 - VA Loma Linda OR Construction\SS-14252-R13.rvt

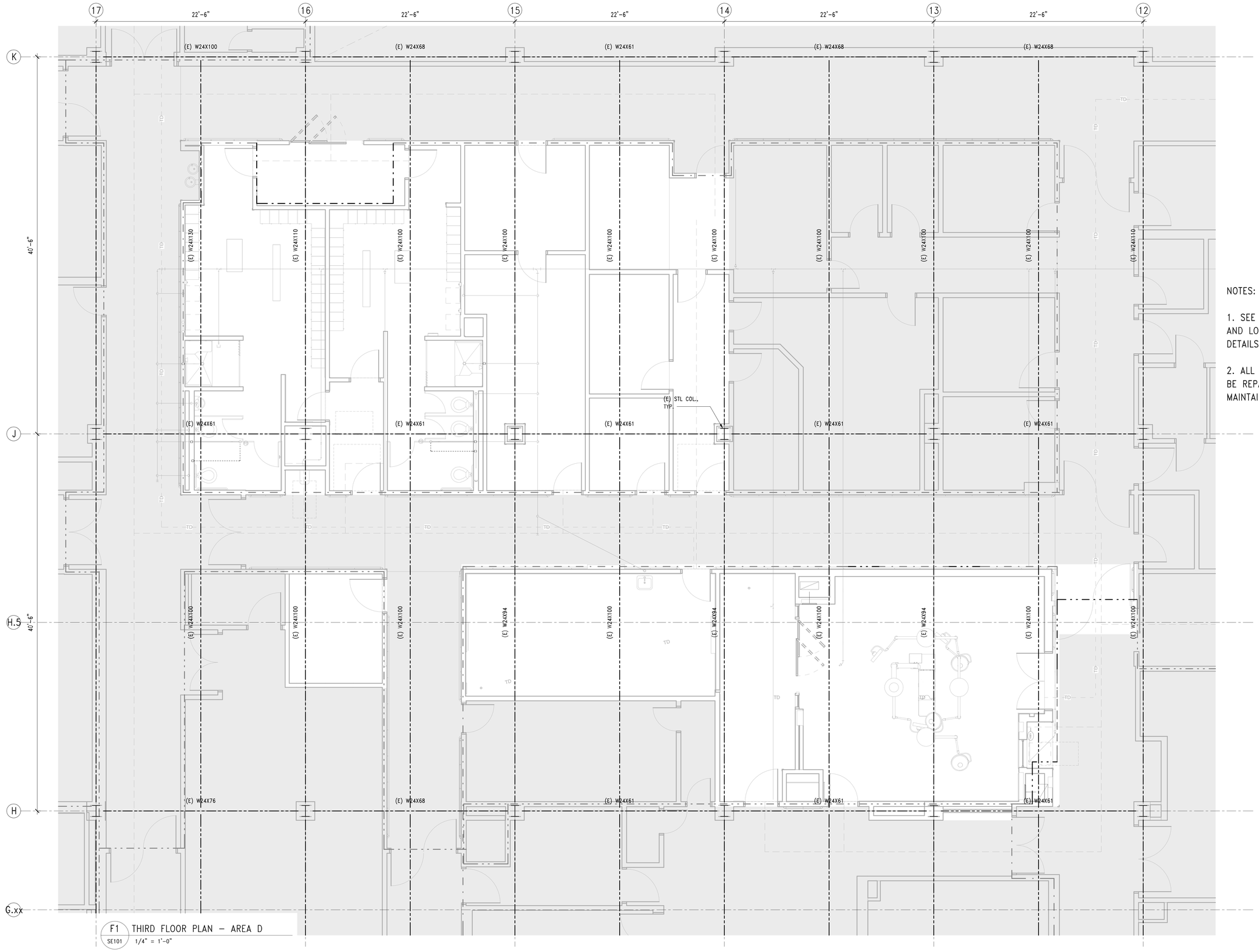

F1 THIRD FLOOR PLAN – AREA D
SE101 1/4" = 1'-0"

NOTES:

1. SEE MEP FOR FLOOR PENETRATION SIZE AND LOCATIONS. SEE B8/S400 FOR TYP. DETAILS

2. ALL NEW & EXISTING PENETRATIONS ARE TO BE REPAIRED TO MEET VA SPECIFICATIONS AND MAINTAIN 2-HR FIRE RATING

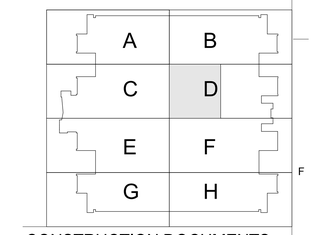

CONSTRUCTION DOCUMENTS
FULLY SPRINKLERED

No.	Description	Date
1	SCHEMATIC DESIGN (SD)	10/20/2015
2	DESIGN DEVELOPMENT (DD)	01/18/2016
3	CONSTRUCTION DOCUMENTS (CD)	03/30/2016

CONSULTANTS:

NABIH YOUSSEF
STRUCTURAL ENGINEERS
550 S. HOPE ST. SUITE 1700
LOS ANGELES, CALIF. 90071
T: 213.362.0707 • F: 213.688.3099
LOS ANGELES • IRVINE • SAN FRANCISCO

Seals and Signatures

ARCHITECTS/ENGINEERS:

LEO A DALY
PLANNING
ARCHITECTURE
ENGINEERING
INTERIORS
550 South Hope Street, 27 Floor
Los Angeles, California 90071, USA
213-629-0100 F213-629-0070
EST. 1915

Drawing Title
FLOOR PLAN - LEVEL 3 - AREA D

Approved: Project Director

Project Title
CONSTRUCT OPERATING ROOM #8

Location
11201 BENTON STREET,
LOMA LINDA, CA 92357

Date 03/30/2016 | Checked AP | Drawn MR

Project Number 605-14-640

Building Number 1

Drawing Number **SE101**

Office of Construction and Facilities Management

Department of Veterans Affairs

VA FORM 08-6231

3/29/2016 4:20:37 PM X:\2014\14252 - VA Loma Linda OR Construction\S-14252-R13.rvt

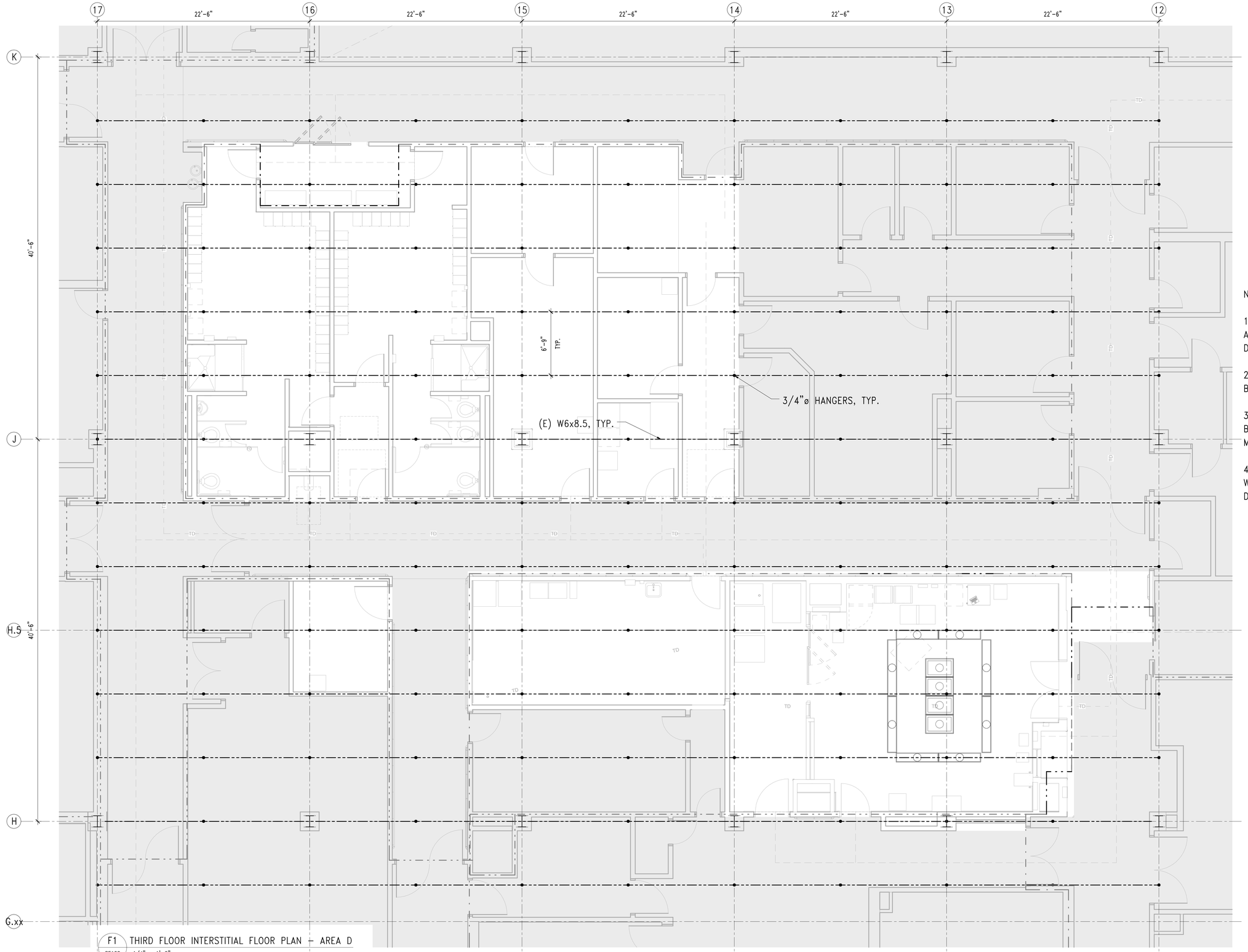

F1 THIRD FLOOR INTERSTITIAL FLOOR PLAN - AREA D
SE102 1/4" = 1'-0"

NOTES:

1. SEE MEP FOR FLOOR PENETRATION SIZE AND LOCATIONS. SEE B8/S400 FOR TYP. DETAILS

2. ALL INTERSTITIAL FLOOR PENETRATIONS TO BE LOGGED AND MAPPED

3.ALL NEW & EXISTING PENETRATIONS ARE TO BE REPAIRED TO MEET VA SPECIFICATIONS AND MAINTAIN 2-HR FIRE RATING

4. FOR INTERSTITIAL FLOOR PENETRATIONS WHICH INTERRUPT (E) SUB-PURLINS, SEE DETAIL E8/SE400 FOR FRAMING DETAILS.

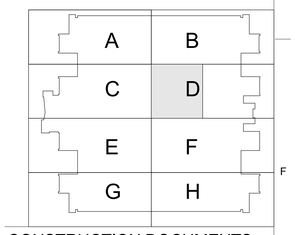

CONSTRUCTION DOCUMENTS
FULLY SPRINKLERED

No.	Description	Date
1	SCHEMATIC DESIGN (SD)	10/20/2015
2	DESIGN DEVELOPMENT (DD)	01/18/2016
3	CONSTRUCTION DOCUMENTS (CD)	03/30/2016

CONSULTANTS:

NABIH YOUSSEF
STRUCTURAL ENGINEERS
550 S. HOPE ST. SUITE 1700
LOS ANGELES, CALIF. 90071
T: 213.362.0707 • F: 213.688.3099
LOS ANGELES • IRVINE • SAN FRANCISCO

Seals and Signatures

ARCHITECTS/ENGINEERS:

LEO A DALY
PLANNING
ARCHITECTURE
ENGINEERING
INTERIORS
550 South Hope Street, 27 Floor
Los Angeles, California 90071, USA
213-629-0100 F213-629-0070
EST. 1915

Drawing Title
INTERSTITIAL FLOOR PLAN - LEVEL 3 - AREA D

Approved: Project Director

Project Title
CONSTRUCT OPERATING ROOM #8

Location
11201 BENTON STREET,
LOMA LINDA, CA 92357

Date 03/30/2016 | Checked AP | Drawn MR

Project Number 605-14-640

Building Number 1

Drawing Number **SE102**

Office of Construction and Facilities Management

Department of Veterans Affairs

VA FORM 08-6231

3/29/2016 4:20:49 PM X:\2014\14252 - VA Loma Linda OR Construction\S-14252-R13.rvt

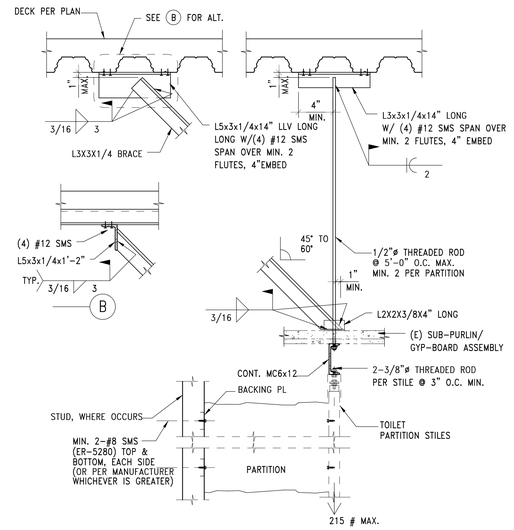

C2 SE400 TOILET PARTITION SUPPORT
1" = 1'-0"

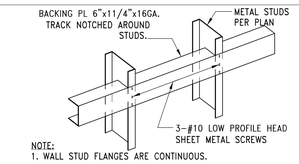

NOTE:
1. WALL STUD FLANGES ARE CONTINUOUS.
2. BACKING PLATE FOR MISC. SURFACE MOUNTED ITEMS. MAX. WEIGHT= 50LBS.
3. SEE ARCH. FRAMING FOR STUD GAUGE.
4. VER. LENGTH, HEIGHT, AND LOCATION OF BACKING PLATE AND NUMBER REQUIRED WITH ACCESSORY MANUFACTURER.

A5 SE400 TYP. MTL STUD MOUNTING PLATE
1" = 1'-0"

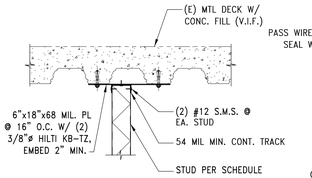

A6 SE400 TYP. STUD TO (E) DECK CONN.
1" = 1'-0"

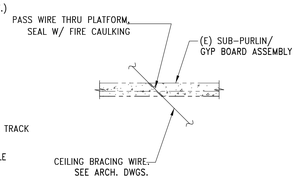

A7 SE400 SUSP. CEILING WIRING CONN.
1" = 1'-0"

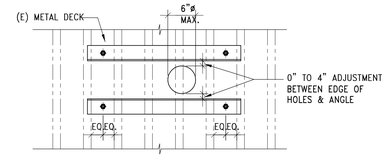

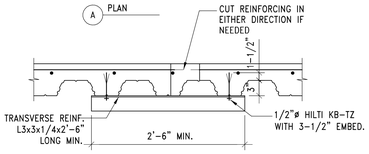

NOTES:
1. PLACE VERT. LEG OF ANGLE INSIDE TOWARDS CORED OPENINGS.
2. CORES AS NOTED ON STRUCTURAL PLANS ONLY.

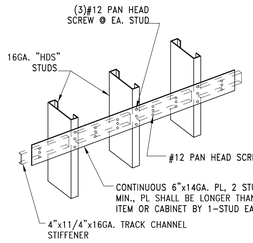

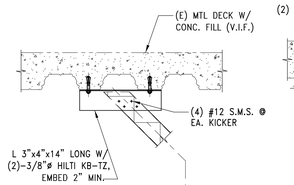

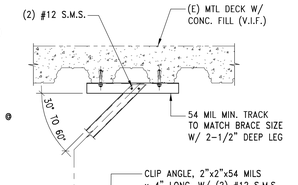

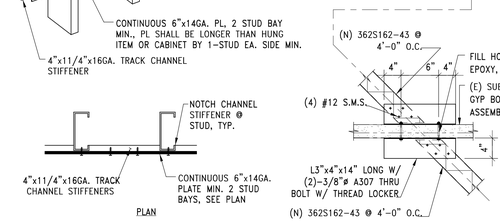

C6 SE400 TYP. KICKER CONN. @ SUSPENDED STUD WALL
1" = 1'-0"

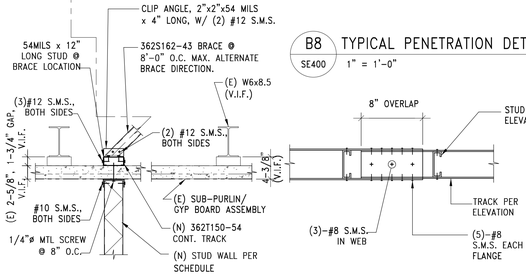

B8 SE400 TYPICAL PENETRATION DETAIL
1" = 1'-0"

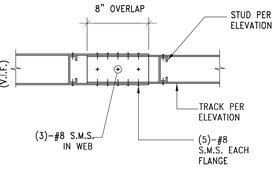

C7 SE400 TOP WALL CONN. DETAIL
1" = 1'-0"

C8 SE400 TRACK LAP SPLICE DETAIL
1" = 1'-0"

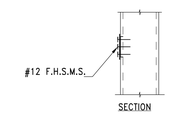

NOTES:
1. BACKING PLATE FOR ALL UPPER WALL HUNG CABINETS (OVER 2 SHELVES)-WALL-MOUNTED EQUIPMENT UP TO 200 LBS. PER FOOT.
2. USE #12 SELF-TAPPING SHEET METAL SCREWS WHEN ATTACHING ITEMS TO BACKING PLATE.
3. WALL STUD FLANGES ARE CONTINUOUS.
4. VERIFY LENGTH HEIGHT AND LOCATION OF BACKING PLATE AND NUMBER REQUIRED WITH MANUFACTURER OF ITEMS IN NOTES.

D5 SE400 TP. BACKING CONNECTION
1" = 1'-0"

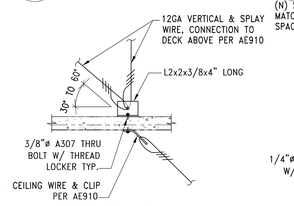

TYP. CEILING
D6 SE400 BRACING WIRE DTL
1" = 1'-0"

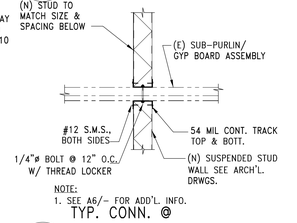

NOTE:
1. SEE A6/- FOR ADD'L. INFO.

TYP. CONN. @
D7 SE400 SUSPENDED STUD WALL
1" = 1'-0"

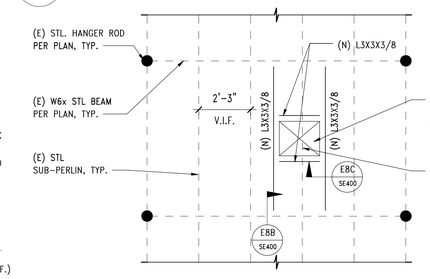

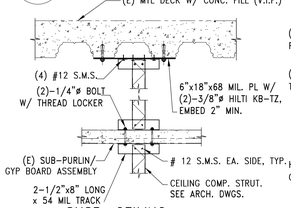

SUSP. CEILING
E7 SE400 COMP. STRUT CONN.
1" = 1'-0"

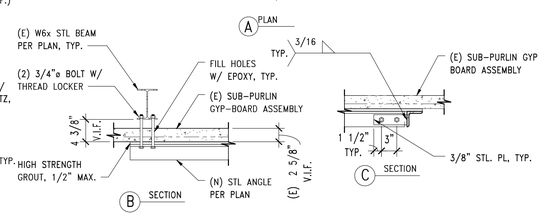

E8 SE400 INTERRUPTED INTERSTITAL FLOOR OPENING DETAIL
N.T.S.

CONSTRUCTION DOCUMENTS
FULLY SPRINKLERED

No.	Description	Date
1	SCHEMATIC DESIGN (SD)	10/20/2015
2	DESIGN DEVELOPMENT (DD)	01/18/2016
3	CONSTRUCTION DOCUMENTS (CD)	03/30/2016

CONSULTANTS:

NABIH YOUSSEF
STRUCTURAL ENGINEERS
550 S. HOPE ST. SUITE 1700
LOS ANGELES, CALIF. 90071
T: 213.362.0707 • F: 213.688.3099
LOS ANGELES • IRVINE • SAN FRANCISCO

Seals and Signatures

ARCHITECTS/ENGINEERS:

LEO A DALY
PLANNING
ARCHITECTURE
ENGINEERING
INTERIORS
550 South Hope Street, 27 Floor
Los Angeles, California 90071, USA
213-629-0100 F213-629-0070
EST. 1915

Drawing Title: **SECTIONS & DETAILS**

Approved: Project Director

Project Title: **CONSTRUCT OPERATING ROOM #8**

Location: 11201 BENTON STREET, LOMA LINDA, CA 92357

Date: 03/30/2016 | Checked: AP | Drawn: MR

Project Number: 605-14-640

Building Number: 1

Drawing Number: **SE400**

Office of Construction and Facilities Management

Department of Veterans Affairs

VA FORM 08-6231

3/29/2016 4:20:43 PM X:\2014\14252 - VA Loma Linda OR Construction\SS-14252-R13.rvt

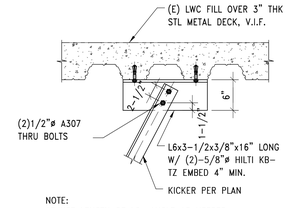

NOTE:
ADJUST LENGTH OF L6x ANGLE AS NEEDED
PER FIELD CONDITIONS (MAX. LENGTH OF 28")

E KICKER TOP CONN.

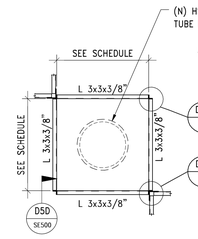

NOTE:
COORDINATE BOLT HOLES IN STL. PLS
PER MANUFACTURER MOUNTING PL
REQ.

F FRAME PLAN VIEW

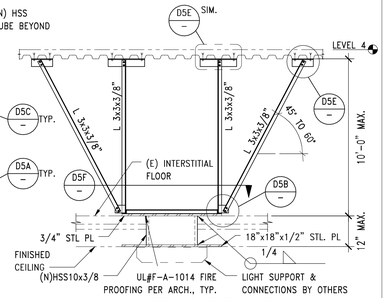

G FRAME ELEV. VIEW

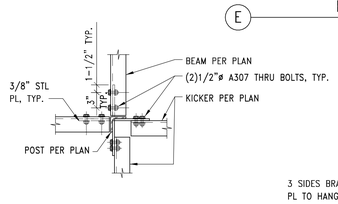

NOTE:
SEE D5D/- FOR INFO NOT SHOWN

A KICKER PLAN VIEW

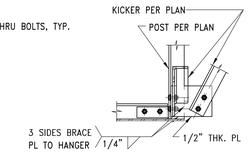

NOTE:
SEE D5D/- FOR INFO NOT SHOWN

B KICKER SIDE VIEW

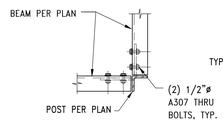

NOTE:
SEE D5A/- & D5B/- FOR INFO
NOT SHOWN, TYP.

C CONN. PLAN VIEW

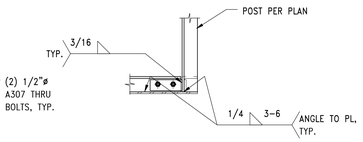

NOTE:
SEE D5A/- & D5B/- FOR INFO
NOT SHOWN, TYP.

D CONN. SIDE VIEW

BOOM/SURGICAL LIGHT ANCHORAGE SCHEDULE – CEILING HUNG

ITEM NO./ DTL NO.	EQUIPMENT (MODEL NO)	FLOOR	WEIGHT (LBS)	HEIGHT (IN)	WIDTH (IN)	DEPTH (IN)	# ANCHOR ROWS	# ANCHORS PER ROW	# ANCHORS PER ROW	COMMENTS
Z0006	TC MOUNT TP-622-C/TC SINGLE FP	3RD	255	–	18	18	2	2	MIN. 1/2"Ø A307 BOLT	SINGLE COMMON MOUNTAIN PLATE ASSUMED (PN 29282), SEE A THRU G
Z0007	CHROMOPHARE F 628/SFP	3RD	1100	–	18	18	2	2	MIN. 1/2"Ø A307 BOLT	SINGLE COMMON MOUNTAIN PLATE ASSUMED (PN 29282), SEE A THRU G
Z0008	CHROMOPHARE SFP	3RD	1100	–	18	18	2	2	MIN. 1/2"Ø A307 BOLT	SINGLE COMMON MOUNTAIN PLATE ASSUMED (PN 29282), SEE A THRU G

NOTE:

1. SEE ARCH./MEP/ELEC. PLANS FOR LOCATION OF BOOM LIGHTS
2. ALL DIMENSION SHOWN ARE OVERALL EQUIPMENT OUTER DIMENSIONS. DIMENSIONS SHOWN WITHIN PARENTHESIS, (XX"): XX" INDICATES MIN. DIMENSIONS BETWEEN MANUFACTURER BASE/FRAME ANCHOR POINTS, OR THE HEIGHT OF CENTER OF GRAVITY.
3. ALL WEIGHTS SHOWN ARE TO BE MAXIMUM OPERATING WEIGHTS PER PROVIDED SPECIFICATIONS.
4. EXPANSION ANCHORS SHALL BE HILTI KB-TZ (ESR-1917). INSTALL PER MANUFACTURER'S SPECIFICATIONS AND ESR REPORT.
5. UNLESS OTHERWISE NOTED, ALL EXPANSION ANCHORS AND EPOXY/ADHESIVE ANCHORS ARE TO BE STAINLESS OR GAVLANIZED.
6. BOLTS TO STEEL BEAM SUPPORTS SHALL BE 1/2"ø A-307 BOLTS, TYP. U.N.O.
7. ALL BOLTS SHALL BE INSTALLED IN STANDARD HOLES U.N.O. PROVIDE WELDED WASHER PLATE AT ALL OVERSIZED HOLES U.N.O.
8. EXISTING FLOOR DECKING IS 4-3/16" THK LIGHT WEIGHT CONCRETE OVER 3" METAL DECK, V.I.F. BY CONTRACTOR.

D5 / SE500 TYPICAL CEILING HUNG EQUIPMENT SCHEDULE & DETAIL
1" = 1'-0"

CONSTRUCTION DOCUMENTS
FULLY SPRINKLERED

No.	Description	Date
1	SCHEMATIC DESIGN (SD)	10/20/2015
2	DESIGN DEVELOPMENT (DD)	01/18/2016
3	CONSTRUCTION DOCUMENTS (CD)	03/30/2016

CONSULTANTS:

NABIH YOUSSEF
STRUCTURAL ENGINEERS
550 S. HOPE ST. SUITE 1700
LOS ANGELES, CALIF. 90071
T: 213.362.0707 • F: 213.688.3099
LOS ANGELES • IRVINE • SAN FRANCISCO

Seals and Signatures

ARCHITECTS/ENGINEERS:

LEO A DALY
PLANNING
ARCHITECTURE
ENGINEERING
INTERIORS
550 South Hope Street,27 Floor
Los Angeles, California 90071, USA
213-629-0100 F213-629-0070
EST. 1915

Drawing Title
EQUIPMENT ANCHORAGE SCHEDULES & DETAILS

Approved: Project Director

Project Title
CONSTRUCT OPERATING ROOM #8

Location
11201 BENTON STREET,
LOMA LINDA, CA 92357

Date 03/30/2016 | Checked AP | Drawn MR

Project Number 605-14-640
Building Number 1
Drawing Number **SE500**

Office of Construction and Facilities Management
Department of Veterans Affairs

VA FORM 08-6231

3/29/2016 4:20:46 PM X:\2014\14252 - VA Loma Linda GR Construction\SS-14252-R13.rvt

ARCHITECTURAL REFERENCE SYMBOLS

WINDOW AND LOUVER TYPE TAG

W-X — SEE CORRESPONDING NUMBER ON SCHEDULE

PARTITION TYPE IDENTIFICATION TAG

1i — SEE PARTITION SYMBOL DESCRIPTION ON PARTITION SHEET

KEYNOTE TAG

? — SEE CORRESPONDING NUMBERED KEYNOTE ON SHEET WHERE REFERENCE OCCURS

FURNITURE, FIXTURE & EQUIPMENT SYMBOL

234

DIMENSION SYMBOL

℄ X ℄* — DIMENSION SHOWN TO:
- CENTERLINE OF ASSEMBLY
- CENTER OF OPENING
- CENTEROF EQUIP / FURN

CENTER LINE TYPICAL

* ℄ SYMBOL OPTIONAL

X — DIMENSION SHOWN TO:
- PARTITION ASSEMBLY
- EDGE OF DOOR OPENING
- OTHER BUILDING ELEMENT
- WPT INDICATED ON DETAIL

GENERAL SYMBOLS

- BASE CABINETS
- BASE AND WALL CABINETS
- WALL CABINETS
- TOILET PARTITION AND DOOR
- HANDRAIL
- BUMPER GUARD
- CG CG CORNER GUARD
- EDGE GUARD

- OVERHEAD ITEMS
- UNDER-COUNTER ITEMS
- V V ITEM - VA SUPPLIED & INSTALLED
- VC ITEM - VA SUPPLIED & CONTRACTOR INSTALLED
- CC ITEM - CONTRACTOR SUPPLIED & INSTALLED
- FE — FIRE EXTINGUISHER BRACKET MOUNTED
- FEC — FIRE EXTINGUISHER CABINET SURFACE MOUNTED
- FEC — FIRE EXTINGUISHER CABINET SEMI-RECESSED
- FEC — FIRE EXTINGUISHER CABINET SEMI-RECESSED

PLUMBING FIXTURES

- DRINKING FOUNTAIN- HI-LO
- SERVICE SINK
- BATHTUB
- URINAL- FLOOR/WALL HUNG
- TOILET- WALL HUNG
- SHOWER
- FD — FLOOR DRAIN IN SLOPING FLOOR
- SHOWER HEAD
- FS — FLOOR SINK

DOOR AND INTERIOR OPENING SYMBOLS

DOOR INDICATION TAG

- D001 — DOOR NUMBER, SEE CORRESPONDING NUMBER ON SCHEDULE — SINGLE OPENING DOOR
- D001 — DOUBLE ACTING DOOR
- D001 — PAIR OF DOORS - EQUAL SIZES
- D001 — PAIR OF DOORS- UNEQUAL SIZES
- D001 — PAIR OF DOORS- DOUBLE EGRESS
- D001 — DOOR WITH SIDELIGHT
- D001 — SLIDING DOOR - BETWEEN JAMBS
- D001 — SLIDING DOOR - POCKET
- D001 — 2 PANEL BI-FOLDING DOOR
- D001 — PAIR- BI-FOLDING DOOR
- D001 — OVERHEAD ROLLING DOOR

ARCHITECTURAL MATERIAL INDICATIONS

PLAN AND SECTION

- EARTH
- CONCRETE
- STEEL
- ALUMINUM
- CMU
- WOOD FRAMING, CONTINUOUS
- CERAMIC TILE
- PLASTER OR GYPSUM BOARD
- WOOD
- INSULATION, SEMI-RIGID
- INSULATION, BATT

ARCHITECTURAL GENERAL NOTES

A. THE FOLLOWING GENERAL NOTES APPLY TO ALL A-SERIES DRAWINGS.

B. FOR GENERAL NOTES, APPLICABLE TO ALL DRAWINGS REFER TO THE "PROJECT GENERAL NOTES" ON SHEET G10.2.1

C. FOR GENERAL NOTES, ABBREVIATION, AND SYMBOLS APPLICABLE ONLY TO DRAWINGS OF A DISCIPLINE OTHER THAN ARCHITECTURE, REFER TO THE SPECIFIC DRAWINGS OF THAT DISCIPLINE – SEE THE "INDEX OF DRAWINGS" ON SHEET GI002 AND GI003.

D. THE DRAWINGS ARE INTENDED TO GRAPHICALLY ILLUSTRATE THE OVERALL NATURE OF THE WORK; THE CONFIGURATION, ARRANGEMENT, AND LOCATION OF THE WORK AND ITS PARTS; AND THE PHYSICAL DIMENSIONS OF THE WORK- THE DRAWINGS TAKE PRECEDENCE OVER THE SPECIFICATIONS WITH RESPECT TO INFORMATION OF THIS NATURE.

E. THE SPECIFICATIONS ARE INTENDED TO COMMUNICATE THE DETAILED PROPERTIES AND QUALITY OF THE INDIVIDUAL MATERIALS, ASSEMBLIES, AND SYSTEMS THAT COMPRISE THE WORK; THE FUNCTIONAL AND PERFORMANCE REQUIREMENTS FOR THE INDIVIDUAL PARTS OF THE WORK; AND THE FABRICATION AND INSTALLATION REQUIREMENTS FOR INDIVIDUAL PARTS OF WORK- THE SPECIFICATIONS TAKE PRECEDENCE OVER THE DRAWINGS WITH RESPECT TO INFORMATION OF THIS NATURE.

F. AS PART OF THE CONTRACTOR'S RESPONSIBILITY TO COORDINATE THE WORK OF ALL SUB- CONTRACTORS, TRADES, AND SUPPLIERS, THE CONTRACTOR SHALL ENDEAVOR TO IDENTIFY AND NOTIFY THE VA REPRESENTATIVE OF ANY CONFLICTS AT THE EARLIEST POSSIBLE DATE SO AS TO ALLOW REASONABLE AND ADEQUATE TIME FOR THE CONFLICT TO BE RESOLVED WITHOUT DELAYING THE WORK, ALL DEVIATIONS FROM THAT WHICH IS REQUIRED BY THE CONTRACT DOCUMENTS MUST BE APPROVED IN ADVANCE BY THE VA REPRESENTATIVE.

G. THE ARCHITECTURAL DRAWINGS ARE A PART OF A LARGER SET OF DRAWINGS WHICH, WHEN COMPLETE, CONSISTS OF ALL DRAWINGS LISTED BY THE INDEX OF DRAWINGS, THE WORK DESCRIBED BY THE DRAWINGS OF ANY ONE DISCIPLINE MAY BE AFFECTED BY THE WORK DESCRIBED ON DRAWINGS OF ANOTHER DISCIPLINE AND MAY REQUIRE REFERENCE TO THE DRAWINGS OF ANOTHER DISCIPLINE. PARTIAL SETS OF DRAWINGS ARE INCOMPLETE AND SHOULD NOT DISTRIBUTED OR UTILIZED BY THE CONTRACTOR. IT IS THE CONTRACTOR'S RESPONSIBILITY TO REVIEW AND COORDINATE THE WORK OF ALL SUB-CONTRACTORS, TRADES, AND SUPPLIERS WITH ALL REQUIREMENTS OF THE CONTRACT DOCUMENTS BEFORE COMMENCING CONSTRUCTION, AND TO ASSURE THAT ALL PARTIES ARE AWARE OF ALL REQUIREMENTS, REGARDLESS OF WHERE THE REQUIREMENTS OCCUR IN THE CONTRACT DOCUMENTS, WHICH MIGHT AFFECT THE WORK OF THAT PARTY.

H. THE ARCHITECTURAL DRAWINGS ESTABLISH AND COORDINATE THE FINISHED APPEARANCE AND EXACT LOCATION OF ALL EXPOSED ELEMENTS IF THE WORK OF ALL TRADES, INCLUDING THAT WORK WHICH IS ILLUSTRATED PRIMARILY ON THE DRAWINGS OF OTHER DISCIPLINES, LOCATIONS SHOWN ON OTHER DRAWINGS ARE SCHEMATIC, UNLESS OTHERWISE NOTED ON THE ARCHITECTURAL DRAWINGS. THE ARCHITECTURAL DRAWINGS TAKE PRECEDENCE FOR THE FINISHED APPEARANCE AND EXACT LOCATION OF ALL PARTS OF THE WORK, EXCEPTION: DIMENSIONED LOCATIONS SHOWN ON DRAWINGS OF OTHER DISCIPLINES SHALL GOVERN ONLY WHERE:

1. SPECIFICALLY AND INDIVIDUALLY INDICATED BY SYMBOL, KEY NOTE, OR NOTATION ON THE ARCHITECTURAL DRAWINGS.
2. OCCURRING WITHIN A ROOM OR OTHER IDENTIFIED SPACE FOR WHICH A-SHEET OR SCHEDULE NOTES INDICATE THAT DIMENSIONS PROVIDED ELSEWHERE SHALL GOVERN.

I. THE ARCHITECTURAL FLOOR PLANS, REFLECTED CEILING PLANS, SECTIONS, AND ELEVATIONS ILLUSTRATE THE EXACT LOCATION OF MANY, BUT NOT ALL, EXPOSED PARTS OF THE WORK, APPLY THE RULES INDICATED BY THE DRAWING "TYPICAL MOUNTING HEIGHTS AND CONFIGURATION DIAGRAMS" TO DETERMINE THE EXACT LOCATION OF EACH EXPOSED PART OF THE WORK.

J. REFER TO THE STRUCTURAL, MECHANICAL, ELECTRICAL, AND PLUMBING DRAWINGS FOR THE DETAILED DESIGN OF STRUCTURAL, MECHANICAL, ELECTRICAL, AND PLUMBING SYSTEMS OF WHICH PORTIONS MAY BE SHOWN ON THE ARCHITECTURAL DRAWINGS.

K. FINISH FLOOR ELEVATIONS ARE TO TOP OF THE CONCRETE FLOOR SLAB, UON. WHERE THE CONCRETE IS DEPRESSED TO ACCOMMODATE MORTAR BEDS, SETTING BEDS, RAISED ACCESS FLOORS, AND OTHER SIMILAR FLOOR ASSEMBLIES, FINISHED FLOOR ELEVATIONS ARE TO TOP OF THE FINISHED FLOOR ASSEMBLY INDICATED.

L. CEILING HEIGHT DIMENSIONS ARE TO FINISHED SURFACES, UNLESS OTHERWISE NOTED.

M. FOR TYP DIMENSIONS CONVENTIONS, INCLUDING RULES FOR LOCATING DOORS WHICH HAVE NOT BEEN DIMENSIONED, REFER TO THE "ARCHITECTURAL DIMENSIONING CONVENTIONS" NOTES ON THIS SHEET.

N. FOR ILLUSTRATION AND DEFINITION OF TYPICAL SYMBOLS USED ON ALL DRAWINGS, REFER TO THE "GENERAL SYMBOLS" ON SHEET GI002.

O. ADDITIONAL SYMBOLS, NOT SHOWN OR DEFINED ON THE DRAWING "ARCHITECTURAL SYMBOLS", MAY OCCUR AND ARE DEFINED ON OTHER ARCHITECTURAL DRAWINGS.

P. BASIC FIRE PROTECTION AND EXITING CONCEPTS ARE ILLUSTRATED BY GI100- SERIES "LIFE SAFETY DIAGRAM" DRAWINGS.

ARCHITECTURAL DIMENSIONING CONVENTIONS

1. EXCEPT WHERE DIRECTED TO PLACE ITEMS OF THE WORK AT THE "APPROXIMATE LOCATION SHOWN," DO NOT SCALE DRAWINGS FOR DIMENSIONAL INFORMATION.

2. ALL ELEMENTS OF THE DRAWINGS MAY NOT BE DRAWN TO EXACT SCALE. ALL DIMENSIONS REQUIRED ARE SHOWN (OR MAY BE DERIVED FROM THOSE SHOWN OR NOTED) ON THE FLOOR PLANS, DETAIL PLANS, ELEVATIONS, SECTIONS, SCHEDULES, CONFIGURATION DETAILS AND SPECIFICATIONS. SEE THE NOTES BELOW AND SYMBOLS ON THIS SHEET FOR DIMENSIONING CONVENTIONS USED ON THIS PROJECT.

3. EXCEPT WHERE SPECIFICALLY NOTED TO THE CONTRARY, ALL DIMENSIONS SHOWN ON THE ARCHITECTURAL DRAWINGS CONFORM TO THE FOLLOWING CONVENTIONS.

A. DIMENSIONS UTILIZING THE "CENTERLINE" SYMBOL ARE MEASURED TO

- STRUCTURAL OR DIMENSIONAL GRID LINES.
- CENTERLINE OF CONCRETE OR CMU WALLS (EXCLUSIVE OF FURRING OR APPLIED FINISHES HAVING THICKNESS). REFER TO THE ARCHITECTURAL PLANS AND SECTIONS, THE STRUCTURAL DRAWINGS OR PARTITION SCHEDULE TO DETERMINE THE THICKNESS OF CONCRETE OR CMU WALLS.
- CENTERLINE OF PARTITION ASSEMBLY(EXCLUSIVE OF ANY APPLIED FINISHES HAVING THICKNESS WHICH MAY BE ADDED TO SUCH WALLS) AT PARTITIONS FRAMED WITH METAL STUDS. REFER TO "PARTITION SCHEDULE" TO DETERMINE THICKNESS OF EACH PARTITION TYPE.
- CENTERLINE OF DOOR, WINDOW OR LOUVER OPENING.
- CENTERLINE OF EQUIPMENT OR FURNISHING.
- CENTERLINE OF OTHER FEATURES AS INDICATED.

3. NOTE NO. 3 CONTINUED

B. REFER TO THIS SHEET FOR SYMBOL USED TO INDICATE CENTERLINE DIMENSION.

C. DIMENSIONS UTILIZING THE "FACE OF " SYMBOL ARE MEASURED TO

- FACE OF CONCRETE OR CMU WALL (EXCLUSIVE OF APPLIED FINISH HAVING THICKNESS OR FURRING WHICH MAY BE ADDED TO THE FACE OF SUCH WALLS).
- FACE OF PARTITION ASSEMBLY (EXCLUSIVE OF ANY APPLIED FINISHES HAVING THICKNESS WHICH MAY BE ADDED TO SUCH WALL) AS DEFINED BY THE PARTITION SCHEDULE UNLESS NOTED AS A "FACE OF FINISH" OR "CLEAR" DIMENSION (SEE NOTE "E" BELOW), DIMENSIONS ARE NOT MEASURED TO THE FACE OF APPLIED FINISH. REFER TO THE "PARTITION SCHEDULE" TO DETERMINE THE THICKNESS OF EACH PARTITION TYPE.
- INSIDE EDGE OF FINISHED DOOR OPENING. REFER TO THE "DOOR SCHEDULE" FOR ADDITIONAL DIMENSIONAL INFORMATION.
- DIMENSIONS OR WORK POINT AS INDICATED ON RELATED ARCHITECTURAL DETAIL PLAN, SECTION, ELEVATION, LAYOUT OR CONFIGURATION DETAIL , OR CONSTRUCTION DETAIL.

D. REFER TO THIS SHEET FOR SYMBOL USED TO INDICATE "FACE OF" DIMENSION.

E. WHERE "FACE OF FINISH" OR "CLEAR" DIMENSIONS ARE SPECIALLY NOTED. THE DIMENSION IS MEASURED TO

3. NOTE NO. 3 CONTINUED

- FINISH FACES AT THE MOST NARROW OR CONSTRICTED POINTS OF SECTION WHERE DIMENSION IS SHOWN, WHEN THE DIMENSION OCCURS ACROSS AN OPEN SPACE. THIS CASE, A "FACE OF FINISH" DIMENSION IS EQUIVALENT TO A "CLEAR" DIMENSION.
- FINISH FACES AT THE WIDEST OR MOST EXPANSIVE POINTS OF THE SECTION THE DIMENSION IS SHOWN WHEN THE DIMENSION OCCURS ACROSS AN OBJECT OR GROUP OF OBJECTS.

F. WHERE "EQUAL" DIMENSIONS ARE USED ON REFLECTED CEILING PLANS TO LOCATE CEILING GRID WORK POINTS, MEASURE DIMENSIONS TO

- EDGE OF THE INDICATED CEILING AT THE FACE OF THE ADJACENT APPLIED FINISH MEASURED AT THE PLANE OF THE CEILING.
- CAUTION DUE TO THE POSSIBLE APPLICATION OF APPLIED FINISHES - THICKNESS OF WHICH MAY VARY BETWEEN FLOOR AND CEILING AND IS NOT ACCOUNTED FOR (EXCEPT AS INDICATED BY "FOF" OR "CLEAR") BY THE DIMENSION SHOWN ON THE FLOOR PLANS - THE CONTRACTOR MUST ADJUST, AS NECESSARY, THE FLOOR PLAN DIMENSIONS TO REFLECT THE ACTUAL DIMENSIONS FOUND AT PLANE OF THE CEILING..

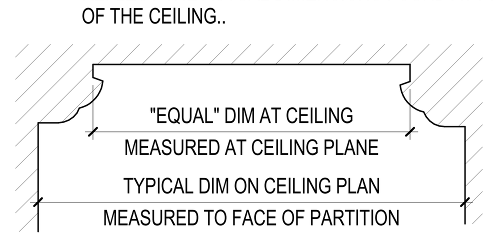

4. WHERE DIMENSIONS ARE NOT PROVIDED ON FLOOR PLANS TO LOCATE DOOR OPENINGS, APPLY THE FOLLOWING RULES IN ORDER TO DETERMINE THE LOCATION OF DOOR OPENINGS.

A. DOOR OPENINGS MAY BE DIMENSIONED ON DRAWINGS OTHER THAN THE FLOOR PLANS. REFER TO THE SECTIONS, ELEVATIONS, DETAILS AND DOOR SCHEDULE NOTES FOR ADDITIONAL DIMENSIONAL INFORMATION.

B. WHERE THE HINGE-SIDE OF A DOOR IS SHOWN ADJACENT TO A WALL - OR WALLS - PERPENDICULAR TO THE WALL IN WHICH THE DOOR OPENING OCCURS.

AT DOORS OCCURRING IN METAL FRAMED GYPSUM BOARD PARTITIONS, LOCATE THE HINGE-SIDE OF THE DOOR FINISHED OPENING 4 INCHES FROM THE FACE (EXCLUSIVE OF APPLIED FINISHES) OF THE CLOSEST PERPENDICULAR WALL OR PARTITION ASSEMBLY.

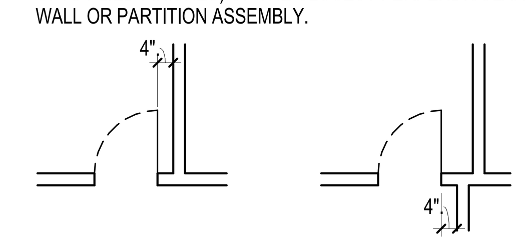

AT DOORS OCCURRING IN WALLS OF CMU CONSTRUCTION, LOCATE THE HINGE-SIDE OF THE DOOR FINISHED OPENING 10 INCHES FROM THE FACE (EXCLUSIVE OF APPLIED FINISHES) OF THE CLOSEST PERPENDICULAR WALL OR PARTITION ASSEMBLY.

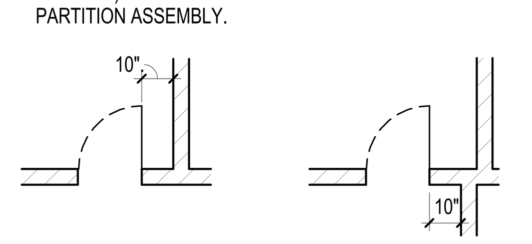

4. NOTE NO. 4 CONTINUED

C. WHERE DOOR OCCURS NOT ADJACENT TO A PERPENDICULAR WALL AND EITHER "DIM E" OR "DIM F" IS 16'-0" OR LESS, LOCATE DOOR UTILIZING THE FOLLOWING MINIMUM DIMENSIONS:

- DIMENSION A = 18 INCHES MIN.
- DIMENSION B = 12 INCHES MIN.
- DIMENSION C = DOOR WIDTH + 2 INCHES MINIMUM.
- DIMENSION D = 4 INCHES MIN AT METAL FRAMED GYPSUM BOARD PARTITIONS OR - EVEN MULTIPLE OF 1/2 CMU MODULE PLUS 2 INCHES AT CMU WALLS.
- DIMENSIONS E AND F = AS SHOWN ON PLANS
- DIMENSION G = 36 INCHES MIN.
- DIMENSION H = 60 INCHES MIN.
- IF SPACE ALLOWS, CENTER DOOR IN WALL SHOWN ON THE DRAWINGS SO THAT EITHER "DIM A" EQUALS "DIM C" OR "DIM B" EQUALS "DIM D".

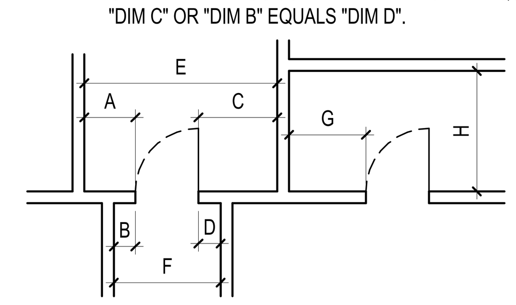

- IF SPACE ALLOWS, CENTER DOOR IN WALL SHOWN ON THE DRAWINGS SO THAT EITHER "DIM A" EQUALS "DIM C" OR "DIM B" EQUALS "DIM D".

4. NOTE NO. 4 CONTINUED

D. IF "DIM E" IN DIAGRAMS BELOW IS LESS THAN THE SUM OF 2 TIMES THE DOOR WIDTH PLUS 20 INCHES, LOCATE DOOR SO THAT MINIMUMS STATED BY NOTE NO. 4C ABOVE FOR "DIM A", "DIM B," AND "DIM D" ARE MET - MAXIMIZING "DIM A" AND MINIMIZING "DIM D" TO THE EXTENT POSSIBLE.

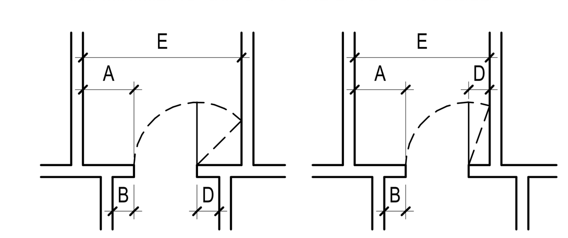

E. WHERE DOOR IS SHOWN LOCATED IN A LARGE EXPANSE OF OPEN WALL ("DIM E" AND "DIM F" IN DIAGRAM BELOW BOTH EXCEED 16'-0"), PLACE DOOR AT APPROXIMATE LOCATION SHOWN ON THE PLANS. WHERE DOOR OCCURS IN CMU WALL, PLACE DOOR AT APPROXIMATE LOCATION SHOWN WHILE MINIMIZING "CUT" OR PARTIAL CMU MODULES ADJACENT TO THE JAMBS.

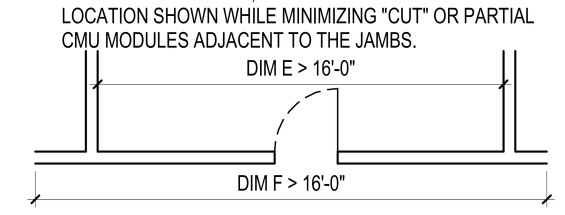

5. WHERE WALLS AND/OR PARTITIONS OF UNEQUAL THICKNESS ABUT, ALIGN EXPOSED FACES, UNLESS OTHERWISE NOTED.

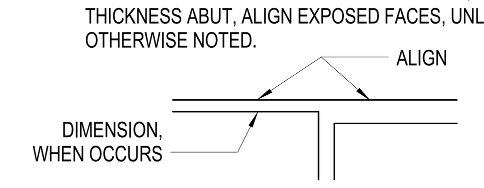

CONSTRUCTION DOCUMENTS
FULLY SPRINKLERED

No.	Description	Date
1	SCHEMATIC DESIGN (SD)	10/20/2015
2	DESIGN DEVELOPMENT (DD)	01/18/2016
3	CONSTRUCTION DOCUMENTS (CD)	03/30/2016

CONSULTANTS:

(SEE PROJECT TEAM DIRECTORY ON GI000 COVER SHEET)

Seals and Signatures

ARCHITECTS/ENGINEERS:

LEO A DALY
PLANNING ARCHITECTURE ENGINEERING INTERIORS
550 South Hope Street, 27th Floor
Los Angeles, California 90071, USA
213-629-0100 F213-629-0070
EST. 1915

Drawing Title: **ARCHITECTURAL SYMBOLS**

Approved: Project Director

Project Title: **CONSTRUCT OPERATING ROOM #8**

Location: 11201 BENTON STREET, LOMA LINDA, CA 92357

Date: 03/30/2016 | Checked: MS | Drawn: TV

Project Number: 605-14-640

Building Number: 1

Drawing Number: **AE001**

Office of Construction and Facilities Management

Department of Veterans Affairs

3/25/2016 4:56:18 PM C:\Users\mbsaquilayan\Documents\Autodesk\Revit 2013 Projects\046-10057-000_Central_mbsaquilayan.rvt

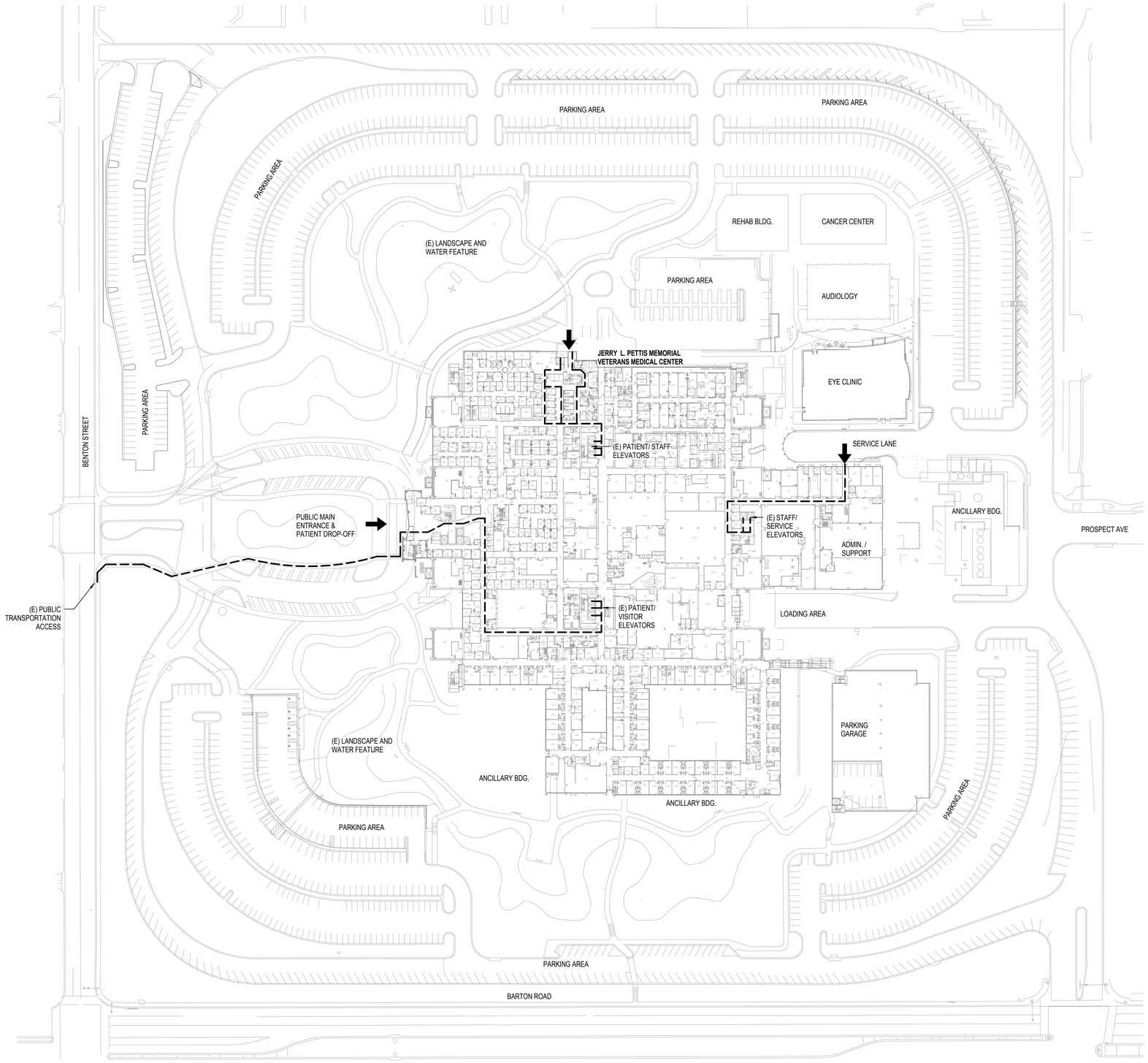

F1 **CAMPUS SITE PLAN**
SCALE: 1" = 60'-0"

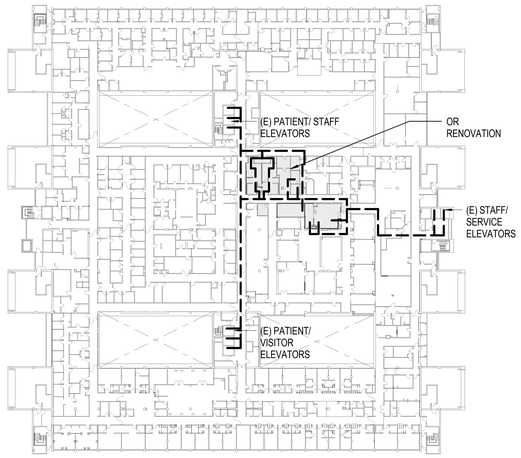

D7 **3rd FLOOR**
SCALE: 1" = 60'-0"

SHEET NOTES

1. CONTRACTOR TO COORDINATE WITH THE VA REGARDING LOCATION OF STAGING AREAS, CONTRACTOR PARKING, DEMOLITION REMOVAL, EQUIPMENT DELIVERY, LOCATION OF ANY TEMPORARY FACILITIES, AND / OR ANY CONSTRUCTION WORK AFFECTING THE OPERATION OF THE (E) BUILDINGS AND FACILITY.
2. ALL WORKERS MUST OBTAIN SECURITY CLEARANCE AND BADGES THROUGH THE VA PRIOR TO COMMENCING ANY WORK. COORDINATE WITH THE VA REGARDING CONTRACTOR ACCESS AND LIFT USE.
3. REFER TO THE GENERAL REQUIREMENTS IN THE SPECIFICATIONS FOR VA INFECTION CONTROL AND CONSTRUCTION REQUIREMENTS.
4. THE PURPOSE OF THIS DRAWING IS TO SHOW THE RELATIONSHIP OF THE MAIN HOSPITAL, PARTICULARLY THE 4SE MEDICAL SURGICAL INPATIENT WARD, WITH ADJACENT PARKING AND BUILDINGS.

ACCESSIBILITY NOTES:

1. ALL EXTERIOR GROUND LEVEL WITH THE LIMIT OF WORK SHALL BE ACCESSIBLE
2. ACCESSIBLE PATH OF TRAVEL AS INDICATED ON PLAN IS A BARRIER FREE ACCESS ROUTE WITHOUT ANY ABRUPT LEVEL CHANGES EXCEEDING 1/2" IF BEVELED AT 1:2 MAX. SLOPE, OR VERTICAL LEVEL CHANGES NOT EXCEEDING 1/4" MAX., AND AT LEAST 48" IN WIDTH. THE SURFACE IS STABLE, FIRM AND SLIP RESISTANT. CROSS SLOPE NO TO EXCEED 2% AND SLOPE IN THE DIRECTION OF TRAVEL LESS THAN 5% UON. ACCESSIBLE PATH OF TRAVEL SHALL BE MAINTAINED FREE OF OBJECTS GREATER THAN 4" PROJECTION FROM WALL AND 27" AND LESS THAN 80".
3. ACCESSIBLE PARKING STALLS AND SIGN ARE EXISTING AND NOT INCLUDED IN THE SCOPE OF WORK

LEGEND:

- LIMIT OF CONSTRUCTION
- ACCESSIBLE PATH OF TRAVEL
- BUILDING ENTRANCE

CONSTRUCTION DOCUMENTS
FULLY SPRINKLERED

No.	Description	Date
1	SCHEMATIC DESIGN (SD)	10/20/2015
2	DESIGN DEVELOPMENT (DD)	01/18/2016
3	CONSTRUCTION DOCUMENTS (CD)	03/30/2016

CONSULTANTS:

(SEE PROJECT TEAM DIRECTORY ON GI000 COVER SHEET)

Seals and Signatures

LICENSED ARCHITECT MICHELLE B. SAQUILAYAN No. C 32660 REN. 10-31-16 STATE OF CALIFORNIA

ARCHITECTS/ENGINEERS:

LEO A DALY
PLANNING ARCHITECTURE ENGINEERING INTERIORS
550 South Hope Street, 27th Floor
Los Angeles, California 90071, USA
213-629-0100 F213-629-0070
EST. 1915

Drawing Title: **ARCHITECTURAL SITE PLAN / ACCESSIBLE PATH OF TRAVEL**

Approved: Project Director

Project Title: **CONSTRUCT OPERATING ROOM #8**

Location: 11201 BENTON STREET LOMA LINDA, CA 92357

Date	Checked	Drawn
03/30/2016	MS	TV

Project Number: 605-14-640

Building Number: 1

Drawing Number: **AS101**

Office of Construction and Facilities Management

Department of Veterans Affairs

VA FORM 08-6231

3/25/2016 3:27:32 PM C:\Users\mbsaquilayan\Documents\Autodesk\Revit 2013 Projects\046-10057-000_Central_mbsaquilayan.rvt

F1 **DEMOLITION PLAN - LEVEL 3 - AREA D**
SCALE: 1/4" = 1'-0"

DEMOLITION NOTES

1. COORDINATE SCOPE OF DEMOLITION WITH ENGINEERING DOCUMENTS FOR STRUCTURAL, MECHANICAL, ELECTRICAL, PLUMBING AND FIRE PROTECTION.
2. ANY DEMOLITION OR REMOVAL INDICATED IS SHOWN, IN GENERAL, TO PROVIDE THE EXTENT OF DEMOLITION AND IS NOT TO BE CONSIDERED A RECORD DRAWING OF EXISTING CONDITIONS.
3. FOR ANY DEMOLITION OR REMOVAL INDICATED ON PLAN, PROVIDE ADEQUATE PROTECTION OF ADJACENT EXISTING SURFACES NOT INCLUDED IN THE DEMOLITION.
4. AT AREAS INDICATED ON PLAN, EXISTING CONCRETE SLAB SHALL BE REPAIRED TO RECEIVE NEW FLOOR FINISHES, REMOVE ANY EXISTING FINISH, PATCH ALL HOLES IN THE SLAB TO MATCH EXISTING CONSTRUCTION.
5. THE BUILDING MUST REMAIN IN OPERATION THORUGHOUT CONSTRUCTION. ANY DISRUPTION TO (E) UTILITIES REQUIRES FOURTEEN (14) DAYS ADVANCE NOTIFICATION TO THE VA.
6. FOR HAZARDOUS MATERIALS ABATEMENT INFORMATION ON THIS FLOOR , REFER TO NARRATIVES "SECTION O"
7. AVAILABLITY OF MATERIAL LAY DOWN AREA AND CONTRACTOR PARKING WITH THE FACILITY CANNOT BE GUARANTEED. CONTRACTOR TO COORDINATE WITH FACILITY

DEMOLITION KEYNOTES

D01	DEMOLISH AND REMOVE INTERIOR PARTITION WALLS
D02	DEMOLISH AND REMOVE DOOR, DOOR FRAME AND ASSOCIATED DOOR HARDWARE
D03	DEMOLISH AND REMOVE PLUMBING FIXTURES (SINK, WATER CLOSET, URINALS, SHOWER, DRINKING FOUNTAIN) TOILET PARTITIONS AND COUNTERTOP
D04	DEMOLISH AND REMOVE WALL PROTECTION, HANDRAIL AND CRASH RAILS
D05	DEMOLISH INTERIOR WINDOW AND WINDOW FRAME
D06	DEMOLISH AND REMOVE LOCKERS
D07	DEMOLISH AND REMOVE FLOORING
D17	DEMOLITION OF MECHANICAL DUCTS, PIPES AND OTHER ASSOCIATED ITEMS WITHIN SHAFT SH03-11 IS NOT INCLUDED IN THE SCOPE OF WORK
D18	REMOVE AND RELOCATE EXISTING DRINKING FOUNTAIN. TEMPORARILY CAP EXISTING PIPES, SEE PLUMBING DRAWINGS
D19	REMOVE AND RELOCATE EXISTING WALL MOUNTED EYEWASH. TEMPORARILY CAP EXISTING PIPES, SEE PLUMBING DRAWINGS
D21	TEMPORARILY REARRANGE WORKSTATIONS TO ACCOMODATE CONSTRUCTION OF PHASE 2. ONCE PHASE 2 IS COMPLETE, MOVE BACK WORKSTATIONS. SAME AMOUNT OF ELECTRICAL AND DATA OUTLETS SHALL BE PROVIDED ON THE NEW WALL
D22	GRIND EXISTING SLAB TO ACHIEVE 1/4" DEPRESSION FOR THE NEW LOCKER ROOM AREAS

LEGEND

- DEMOLISHED DOOR
- EXISTING CONSTRUCTION TO REMAIN
- NEW CONSTRUCTION
- DEMOLISHED CONSTRUCTION
- EXISTING 1-HR RATED WALL TO REMAIN
- NEW 1-HR RATED WALL
- EXISTING 2-HR RATED WALL TO REMAIN
- NEW 2-HR RATED WALL
- TEMPORARY PARTITON PHASE I
- TEMPORARY PARTITON PHASE II
- EXISTING CEILING ASSEMBLY AND CEILING FIXTURES TO BE DEMOLISHED AND REMOVED
- AREA OF BUILDING NOT IN SCOPE OF WORK

KEY PLAN

A	B
C	D
E	F
G	H

CONSTRUCTION DOCUMENTS
FULLY SPRINKLERED

No.	Description	Date
1	SCHEMATIC DESIGN (SD)	10/20/2015
2	DESIGN DEVELOPMENT (DD)	01/18/2016
3	CONSTRUCTION DOCUMENTS (CD)	03/30/2016

CONSULTANTS:

(SEE PROJECT TEAM DIRECTORY ON GI000 COVER SHEET)

Seals and Signatures

LICENSED ARCHITECT MICHELLE R. SAQUILAYAN C. 32660 EXP. 10-31-2016 STATE OF CALIFORNIA

ARCHITECTS/ENGINEERS:

LEO A DALY
PLANNING ARCHITECTURE ENGINEERING INTERIORS
550 South Hope Street, 27th Floor
Los Angeles, California 90071, USA
213-629-0100 F213-629-0070
EST. 1915

Drawing Title: **DEMOLITION FLOOR PLAN - LEVEL 3 -AREA D**

Approved: Project Director

Project Title: **CONSTRUCT OPERATING ROOM #8**

Location: 11201 BENTON STREET LOMA LINDA, CA 92357

Date: 03/30/2016 | Checked: MS | Drawn: TV

Project Number: 605-14-640

Building Number: 1

Drawing Number: **AD101**

Office of Construction and Facilities Management

Department of Veterans Affairs

VA FORM 08-6231

3/26/2016 2:16:38 PM C:\Users\mhsaquilayan\Documents\Autodesk Revit 2013 Projects\046-16057-000_Central_mhsaquilayan.rvt

F1 **DEMOLITION REFLECTED CEILING PLAN - LEVEL 3 - AREA D**
SCALE: 1/4" = 1'-0"

DEMOLITION NOTES

1. COORDINATE SCOPE OF DEMOLITION WITH ENGINEERING DOCUMENTS FOR STRUCTURAL, MECHANICAL, ELECTRICAL, PLUMBING AND FIRE PROTECTION.
2. ANY DEMOLITION OR REMOVAL INDICATED IS SHOWN, IN GENERAL, TO PROVIDE THE EXTENT OF DEMOLITION AND IS NOT TO BE CONSIDERED A RECORD DRAWING OF EXISTING CONDITIONS.
3. FOR ANY DEMOLITION OR REMOVAL INDICATED ON PLAN, PROVIDE ADEQUATE PROTECTION OF ADJACENT EXISTING SURFACES NOT INCLUDED IN THE DEMOLITION.
4. AT AREAS INDICATED ON PLAN, EXISTING CONCRETE SLAB SHALL BE REPAIRED TO RECEIVE NEW FLOOR FINISHES, REMOVE ANY EXISTING FINISH, PATCH ALL HOLES IN THE SLAB TO MATCH EXISTING CONSTRUCTION.
5. THE BUILDING MUST REMAIN IN OPERATION THORUGHOUT CONSTRUCTION. ANY DISRUPTION TO (E) UTILITIES REQUIRES FOURTEEN (14) DAYS ADVANCE NOTIFICATION TO THE VA.
6. FOR HAZARDOUS MATERIALS ABATEMENT INFORMATION ON THIS FLOOR , REFER TO NARRATIVES "SECTION O"
7. AVAILABLITY OF MATERIAL LAY DOWN AREA AND CONTRACTOR PARKING WITH THE FACILITY CANNOT BE GUARANTEED. CONTRACTOR TO COORDINATE WITH FACILITY

DEMOLITION KEYNOTES

D16 DEMOLISH AND REMOVE CEILING FINISHES, LIGHT FIXTURES, MECHANICAL GRILLES AND OTHER CEILING MOUNTED EQUIPMENT

LEGEND

- EXISTING CONSTRUCTION TO REMAIN
- EXISTING CONSTRUCTION TO BE DEMOLISHED
- AREA OF BUILDING NOT IN SCOPE OF WORK

KEY PLAN

A	B
C	D
E	F
G	H

CONSTRUCTION DOCUMENTS FULLY SPRINKLERED

No.	Description	Date
1	SCHEMATIC DESIGN (SD)	10/20/2015
2	DESIGN DEVELOPMENT (DD)	01/18/2016
3	CONSTRUCTION DOCUMENTS (CD)	03/30/2016

CONSULTANTS:

(SEE PROJECT TEAM DIRECTORY ON GI000 COVER SHEET)

Seals and Signatures

LICENSED ARCHITECT MICHELLE B SAQUILAYAN C 32660 EXPIRES 10-31-17 STATE OF CALIFORNIA

ARCHITECTS/ENGINEERS:

LEO A DALY
PLANNING ARCHITECTURE ENGINEERING INTERIORS
550 South Hope Street, 27th Floor
Los Angeles, California 90071, USA
213-629-0100 F213-629-0070
EST. 1915

Drawing Title: **DEMOLITION REFLECTED CEILING PLAN - LEVEL 3 -AREA D**

Approved: Project Director

Project Title: **CONSTRUCT OPERATING ROOM #8**

Location: 11201 BENTON STREET LOMA LINDA, CA 92357

Date: 03/30/2016 | Checked: MS | Drawn: TV

Project Number: 605-14-640

Building Number: 1

Drawing Number: **AD102**

Office of Construction and Facilities Management

Department of Veterans Affairs

VA FORM 08-6231

3/22/2016 5:01:52 PM C:\Users\mbsaquilayan\Documents\Autodesk\Revit 2013 Projects\046-10057-000_Central_mbsaquilayan.rvt

F1 FLOOR PLAN - LEVEL 3 - AREA D

SCALE: 1/4" = 1'-0"

0 2' 4' 8'

SCALE : 1/4" = 1'-0"

PLAN NOTES

1. REPAIR AND PATCH ALL SURFACES WHERE WALLS HAVE BEEN REMOVED OR SCARRED FROM DEMOLITION.
2. WHERE NEW WORK ADJOINS EXISTING, SUCH NEW WORK SHALL BE PROPERLY INTEGRATED TO ENSURE UNIFORM APPEARANCE. NEW SURFACES SHALL ALIGN WITH EXISTING ADJACENT SURFACE.
3. EXISTING SLAB SHALL BE REPAIRED TO RECEIVE NEW FLOOR FINISHES WHERE INDICATED, PATCH ALL HOLES IN THE SLAB TO MATCH EXISTING CONSTRUCTION.
4. UNLESS OTHERWISE NOTED, ALL FF & E IS PROVIDED BY THE VA. FF & E IS SHOWN ON THE PLANS FOR COORDINATION AND DESIGN PURPOSES.
5. ALL AREAS OUTSIDE OF THE PROJECT SCOPE MUST REMAIN IN OPERATION THROUGHOUT CONSTRUCTION.
6. THE VA REQUIRES NOTIFICATION OF TEN (10) BUSINESS DAYS PRIOR TO ANY INTERRUPTIONS TO (E) UTILITIES.
7. CODE COMPLIANT EXITING MUST BE MAINTAINED THROUGHOUT CONSTRUCTION. CONSTRUCT ALL TEMPORARY PARTITIONS ACCORDING TO PHASING SCHEDULE. REFER TO THE DEMOLITION PLANS FOR THE PHASE DESIGNATION OF TEMPORARY PARTITIONS.
8. CONTRACTOR TO ENGAGE A CERTIFIED RADIOLOGICAL PHYSICIST FOR RADIATION SHIELDING DESIGN EVALUATION REPORT

FLOOR PLAN KEYNOTES

C01	
C02	HANDRAIL/GUARDRAIL, SEE DETAIL D1/AE610
C03	CRASH RAIL, SEE DETAIL F2/AE610
C04	CEILING MOUNTED TOILET PARTITION, SEE DETAIL D8/AE610
C05	ACCESSIBLE LOCKER, SEE DETAIL C5/GI005
C06	MODULAR OVERHEAD CABINET WITH VERTICAL FILLER, PROVIDE BACKING PER DETAIL A5/SE400 AND D5/SE400
C07	MODULAR BASE CABINET,PROVIDE BACKING PER DETAIL A5/SE400 AND D5/SE400
C12	CONSTRUCTION AND INSTALLATION OF NEW MECHANICAL DUCTS, PIPES AND OTHER ASSOCIATED ITEMS WITHIN SHAFT SH03-11 IS NOT INCLUDED IN THE SCOPE OF WORK
C13	SEMI RECESSED FIRE EXTINGUISHER CABINET, SEE DETAIL F3/AE504 AND F5/AE504
C14	RELOCATED DRINKING FOUNTAIN
C15	RELOCATED WALL MOUNTED EYEWASH
C16	RECESSED MEDICAL GAS ALARM PANEL, SEE F3/AE504, F5/AE504 AND PLUMBING DRAWINGS
C17	RECESSED MEDICAL GAS ZONE VALVE, SEE F3/AE504, F5/AE504 AND PLUMBING DRAWINGS
C18	RECESSED ISOLATED POWER PANEL, SEE F3/AE504, F5/AE504 AND ELECTRICAL DRAWINGS
C19	STAINLESS STEEL RECESSED PROTECTIVE BOX FOR CARD READER, SEE DETAIL F1/AE504
C20	WAVE ACTIVATED DOOR OPERATOR
C22	WALL RECESSED SURGICAL LIGHT PANELS, SEE ELECTRICAL DRAWINGS

LEGEND: FLOOR PLAN

- EXISTING CONSTRUCTION TO REMAIN
- NEW CONSTRUCTION
- EXISTING 1-HR RATED WALL TO REMAIN
- NEW 1-HR RATED WALL
- EXISTING 2-HR RATED WALL TO REMAIN
- NEW 2-HR RATED WALL
- (N) EQUIPMENT OR RELOCATED (E) EQUIPMENT- SEE EQUIPMENT LIST WITH SPECIFICATIONS
- AREA OF BUILDING NOT IN SCOPE OF WORK
- # EXTENT OF LEAD SHIELDING, SEE PLAN NOTES #8

KEY PLAN

A	B
C	D
E	F
G	H

CONSTRUCTION DOCUMENTS FULLY SPRINKLERED

No.	Description	Date
1	SCHEMATIC DESIGN (SD)	10/20/2015
2	DESIGN DEVELOPMENT (DD)	01/18/2016
3	CONSTRUCTION DOCUMENTS (CD)	03/30/2016

CONSULTANTS:

(SEE PROJECT TEAM DIRECTORY ON GI000 COVER SHEET)

Seals and Signatures

LICENSED ARCHITECT MICHELLE B SAGUILAYAN C 32660 EXP. 10-31-16 STATE OF CALIFORNIA

ARCHITECTS/ENGINEERS:

LEO A DALY
PLANNING ARCHITECTURE ENGINEERING INTERIORS
550 South Hope Street, 27th Floor
Los Angeles, California 90071, USA
213-629-0100 F213-629-0070
EST. 1915

Drawing Title: FLOOR PLAN - LEVEL 3 - AREA D

Approved: Project Director

Project Title: CONSTRUCT OPERATING ROOM #8

Location: 11201 BENTON STREET LOMA LINDA, CA 92357

Date: 03/30/2016 | Checked: MS | Drawn: TV

Project Number: 605-14-640

Building Number: 1

Drawing Number: AE101

Office of Construction and Facilities Management

Department of Veterans Affairs

VA FORM 08-6231

9/22/2016 8:00:14 PM C:\Users\mbsaguilayan\Documents\Autodesk Revit 2013 Projects\046-10057-000_Central_mbsaguilayan.rvt

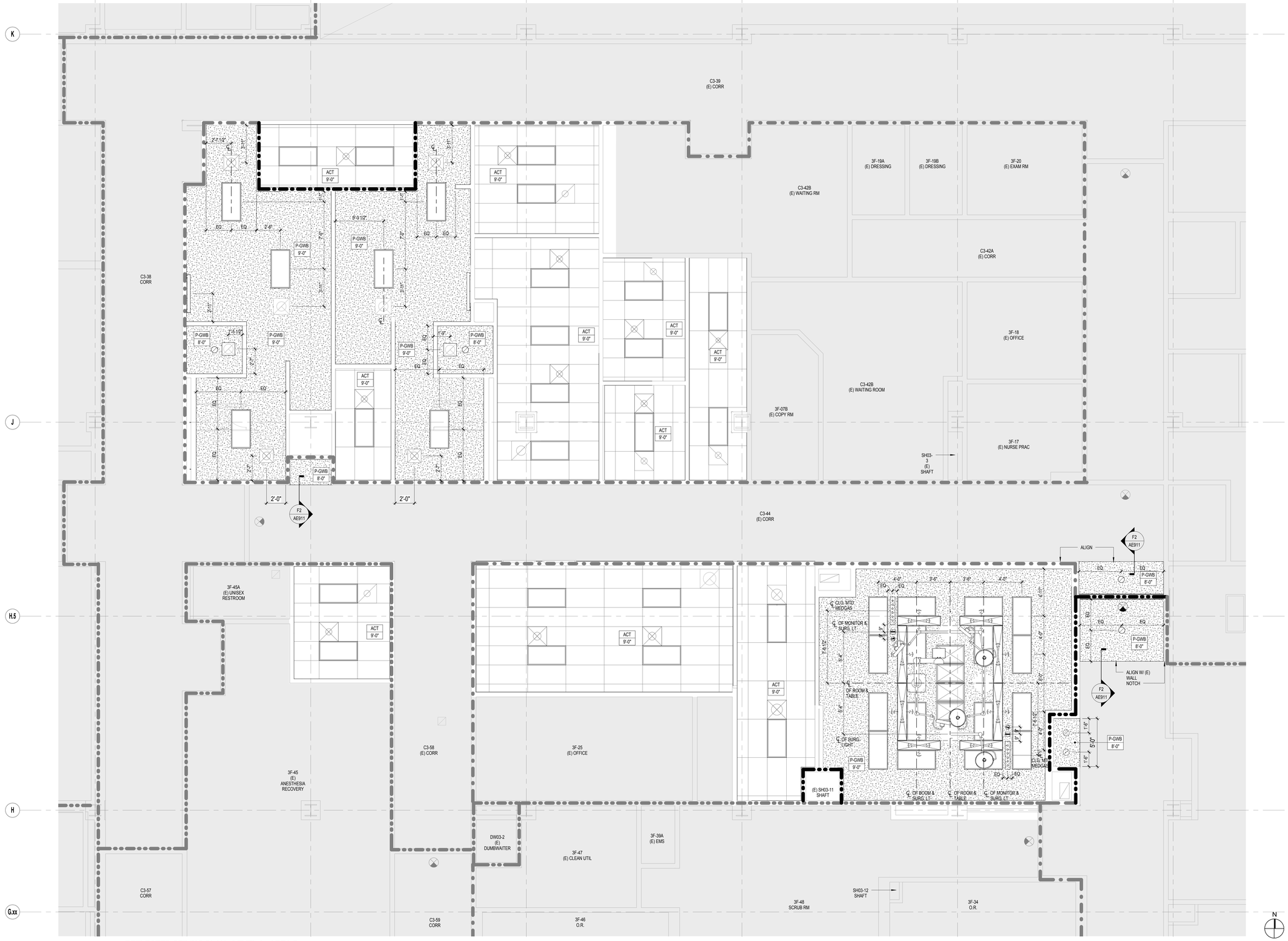

F1 **REFLECTED CEILING PLAN - LEVEL 3 - AREA D**
SCALE: 1/4" = 1'-0"

0 2' 4' 8'
SCALE : 1/4" = 1'-0"

SHEET NOTES

1. CEILING SURFACES NOT SPECIFICALLY INDICATED AS NEW ARE TO BE CONSIDERED EXISTING TO REMAIN.
2. PROVIDE CEILING ACCESS AS REQUIRED FOR EQUIPMENT AND SYSTEM MAINTENANCE. IDENTIFY ACCESS TILES OR PROVIDE REMOVABLE ACCESS PANELS WHERE REQUIRED.
3. REFER TO ENGINEERING DOCUMENTS FOR EXACT QUANTITIES OF NEW AND DISPOSITION OF EXISTING SMOKE DETECTION, FIRE ALARM DEVICES, AND SPEAKERS.
4. LAYOUT ACOUSTICAL CEILING TILES FROM CENTER OF ROOM, BOTH DIRECTIONS, UNO
5. CEILING FINISH TO CONTINUE ABOVE ALL UPPER WALL CABINETS, UNO
8 LOCATE ALL SPRINKLER HEADS, SMOKE DETECTORS, SPEAKERS AND ALL OTHER CEILING MOUNTED MECHANICAL, ELECTRICAL, PLUMBING AND SECURITY ITEMS AT THE CENTER FO ACOUSTICAL CEING TILE, UNO

LEGEND:

- EXISTING CONSTRUCTION TO REMAIN IN PLACE, PROTECT DURING CONSTRUCTION.
- NEW CONSTRUCTION.
- WALL MOUNTED LED LIGHT
- NEW RECESSED 2'X4' LED LIGHT
- NEW LED DOWNLIGHT
- NEW GYPSUM BOARD CEILING / SOFFIT
- NEW 2' X 4' SUSPENDED ACOUSTICAL TILE CEILING
- Finish / 8' - 0" — MATERIAL FINISH CODE , SEE ROOM AND MATERIAL FINISH SCHEDULES; CEILING HEIGHT ABOVE FINISH FLOOR
- NEW RECESSED RETURN AIR CEILING DIFFUSER, REFER TO MECHANICAL DWGS FOR SIZES
- NEW RECESSED SUPPLY AIR CEILING DIFFUSER, REFER TO MECHANICAL DWGS FOR SIZES
- NEW RECESSED EXHAUST AIR CEILING DIFFUSER, REFER TO MECHANICAL DWGS FOR SIZES
- NEW AIR CURTAIN SLOT, REFER TO MECHANICAL DWGS
- NEW LAMINAR PANEL, REFER TO MECHANICAL
- CEILING MOUNTED NEW EXIT SIGN
- MEDICAL GAS OUTLETS, REFER TO PLUMBING DRAWINGS
- CEILING MOUNTED DATA OUTLET, REFER TO TELECOMMUNICATIONS DWGS
- CEILING MOUNTED ELECTRICAL OUTLET, REFER TO ELECTRICAL DWGS
- AREA OF BUILDING NOT IN SCOPE OF WORK

NOTE: FOR FIRE, LIFE SAFETY FIXTURE SYMBOLS, REFER TO GI002

KEY PLAN

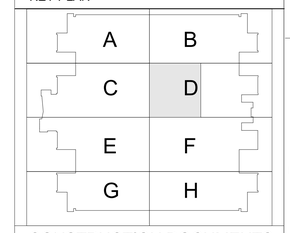

CONSTRUCTION DOCUMENTS
FULLY SPRINKLERED

No.	Description	Date
1	SCHEMATIC DESIGN (SD)	10/20/2015
2	DESIGN DEVELOPMENT (DD)	01/18/2016
3	CONSTRUCTION DOCUMENTS (CD)	03/30/2016

CONSULTANTS:

(SEE PROJECT TEAM DIRECTORY ON GI000 COVER SHEET)

Seals and Signatures

LICENSED ARCHITECT
MICHELLE B SAOUTAYAN
C 32666
EXP. 10-31-2016
STATE OF CALIFORNIA

ARCHITECTS/ENGINEERS:

LEO A DALY
PLANNING
ARCHITECTURE
ENGINEERING
INTERIORS
550 South Hope Street, 27th Floor
Los Angeles, California 90071, USA
213-629-0100 F213-629-0070
EST. 1915

Drawing Title: **REFLECTED CEILING PLAN - LEVEL 3 - AREA D**

Approved: Project Director

Project Title: **CONSTRUCT OPERATING ROOM #8**

Location: 11201 BENTON STREET, LOMA LINDA, CA 92357

Date: 03/30/2016 | Checked: MS | Drawn: TV

Project Number: 605-14-640

Building Number: 1

Drawing Number: **AE102**

Office of Construction and Facilities Management

Department of Veterans Affairs

VA FORM 08-6231

3/25/2016 3:26:47 PM C:\Users\mbsaqutayan\Documents\Autodesk\Revit 2013 Projects\046-10057-000_Central_mbsaqutayan.rvt

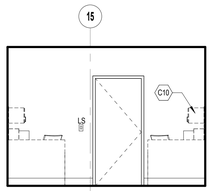

A1 ANESTHESIA WORKSTATIONS - N1
SCALE: 1/4" = 1'-0"

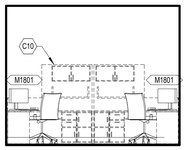

A2 ANESTHESIA WORKSTATIONS - E1
SCALE: 1/4" = 1'-0"

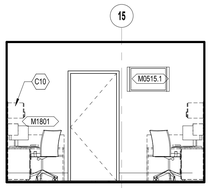

A3 ANESTHESIA WORKSTATIONS - S1
SCALE: 1/4" = 1'-0"

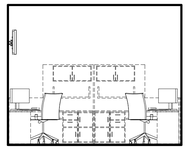

A4 ANESTHESIA WORKSTATIONS - W1
SCALE: 1/4" = 1'-0"

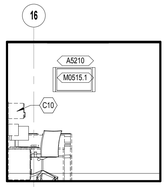

B1 MANAGER OFFICE - N
SCALE: 1/4" = 1'-0"

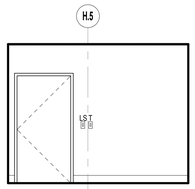

B2 MANAGER OFFICE - E
SCALE: 1/4" = 1'-0"

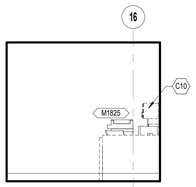

B3 MANAGER OFFICE - S
SCALE: 1/4" = 1'-0"

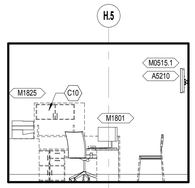

B4 MANAGER OFFICE - W
SCALE: 1/4" = 1'-0"

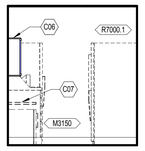

C1 MEDICATION ROOM - N
SCALE: 1/4" = 1'-0"

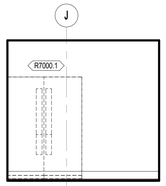

C2 MEDICATION ROOM - E
SCALE: 1/4" = 1'-0"

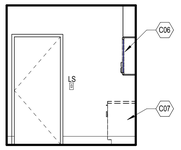

C3 MEDICATION ROOM - S
SCALE: 1/4" = 1'-0"

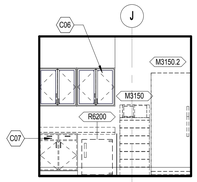

C4 MEDICATION ROOM - W
SCALE: 1/4" = 1'-0"

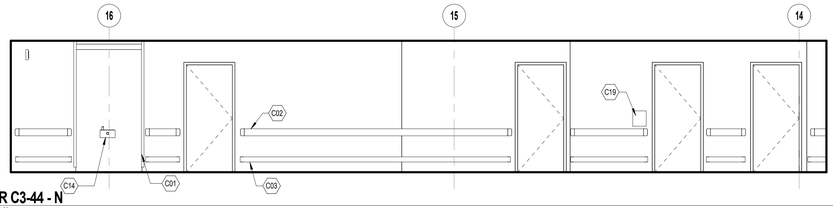

C6 (E) CORR C3-44 - N
SCALE: 1/4" = 1'-0"

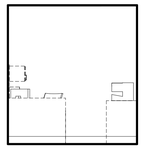

D1 CHIEF OFFICE - N
SCALE: 1/4" = 1'-0"

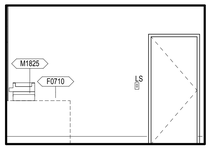

D2 CHIEF OFFICE - E
SCALE: 1/4" = 1'-0"

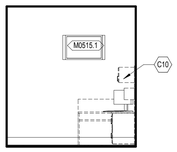

D3 CHIEF OFFICE - S
SCALE: 1/4" = 1'-0"

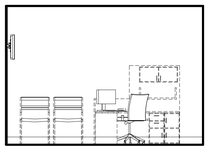

D4 CHIEF OFFICE - W
SCALE: 1/4" = 1'-0"

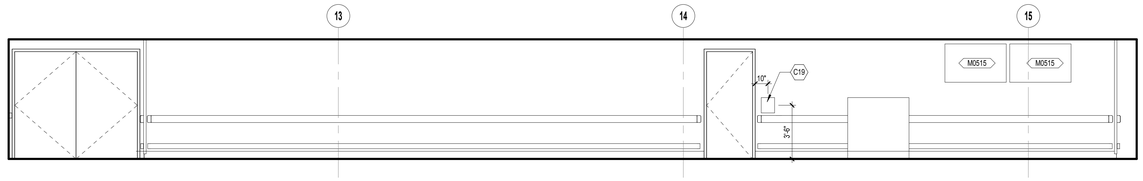

D5 (E) CORR C3-44 - S
SCALE: 1/4" = 1'-0"

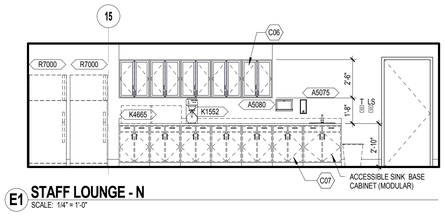

E1 STAFF LOUNGE - N
SCALE: 1/4" = 1'-0"

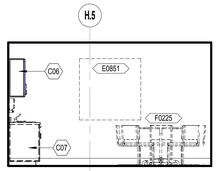

E3 STAFF LOUNGE - E
SCALE: 1/4" = 1'-0"

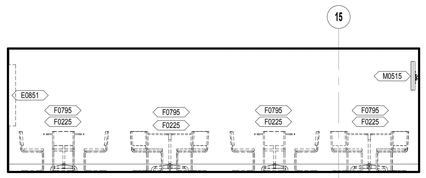

E4 STAFF LOUNGE - S
SCALE: 1/4" = 1'-0"

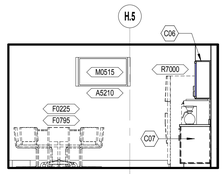

E6 STAFF LOUNGE - W
SCALE: 1/4" = 1'-0"

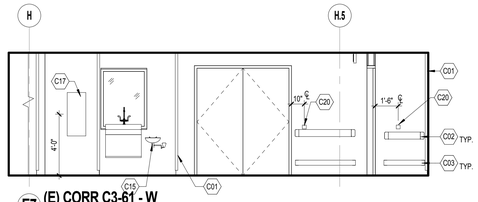

E7 (E) CORR C3-61 - W
SCALE: 1/4" = 1'-0"

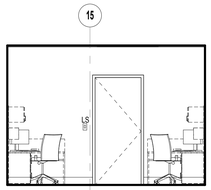

F1 ANESTHESIA WORKSTATIONS - N
SCALE: 1/4" = 1'-0"

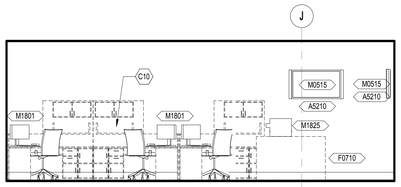

F2 ANESTHESIA WORKSTATIONS - E
SCALE: 1/4" = 1'-0"

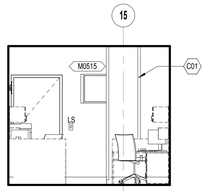

F4 ANESTHESIA WORKSTATIONS - S
SCALE: 1/4" = 1'-0"

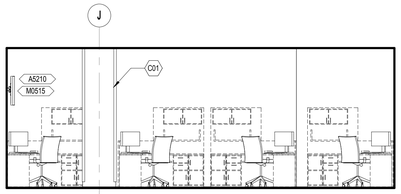

F6 ANESTHESIA WORKSTATIONS - W
SCALE: 1/4" = 1'-0"

SHEET NOTES

1. FOR STANDARD MOUNTING HEIGHTS AND ADA CLEARANCES, REFER TO THE ACCESSIBILITY SHEETS GI004-GI007.

2. ACCENT WALL FINISHES ARE NOTED ON INTERIOR ELEVATIONS, REFER TO FINISH PLANS, AI101 AND AI102 AND MATERIAL SCHEDULES, AI301 FOR ADDITIONAL FINISH INFO.

3. REFER TO EQUIPMENT PLANS, QH101 AND EQUIPMENT LIST, QH201

INTERIOR ELEVATION KEYNOTES

C01	FLOOR TO CEILING WALL CORNER GUARD, SEE DETAIL F1/AE504
C02	HANDRAIL/GUARDRAIL, SEE DETAIL D1/AE610
C03	CRASH RAIL, SEE DETAIL D1/AE610
C06	MODULAR OVERHEAD CABINET, PROVIDE BACKING PER DETAIL C5A/AE503
C07	MODULAR BASE CABINET,PROVIDE BACKING PER DETAIL C5A/AE503
C10	SYSTEMS FURNITURE
C14	RELOCATED DRINKING FOUNTAIN
C15	RELOCATED WALL MOUNTED EYEWASH
C17	RECESSED MEDICAL GAS ZONE VALVE, SEE F1/AE504, F3/AE504 AND PLUMBING DRAWINGS
C19	STAINLESS STEEL RECESSED PROTECTIVE BOX FOR CARD READER, SEE DETAIL F1/AE504
C20	WAVE ACTIVATED DOOR OPERATOR

INTERIOR ELEVATION LEGEND

T	THERMOSTAT, SEE GI007 FOR MOUNTNG HEIGHT
LS	LIGHT SWITCH, SEE GI007 FOR MOUNTNG HEIGHT

CONSTRUCTION DOCUMENTS
FULLY SPRINKLERED

No.	Description	Date
1	SCHEMATIC DESIGN (SD)	10/20/2015
2	DESIGN DEVELOPMENT (DD)	01/18/2016
3	CONSTRUCTION DOCUMENTS (CD)	03/30/2016

CONSULTANTS:

(SEE PROJECT TEAM DIRECTORY ON GI000 COVER SHEET)

Seals and Signatures

LICENSED ARCHITECT MICHELE B SADOUGHI ARCHITECT C 32660 EXP. DATE 10-31-16 STATE OF CALIFORNIA

ARCHITECTS/ENGINEERS:

LEO A DALY
550 South Hope Street, 27th Floor
Los Angeles, California 90071, USA
213-629-0100 F213-629-0070

PLANNING
ARCHITECTURE
ENGINEERING
INTERIORS

EST. 1915

Drawing Title
INTERIOR ELEVATIONS

Approved: Project Director

Project Title
CONSTRUCT OPERATING ROOM #8

Location
11201 BENTON STREET
LOMA LINDA, CA 92357

Date 03/30/2016 | Checked MS | Drawn TV

Project Number 605-14-640

Building Number 1

Drawing Number
AE201

Office of Construction and Facilities Management

Department of Veterans Affairs

VA FORM 08-6231

3/23/2016 3:26:53 PM C:\Users\mbsapulayan\Documents\Autodesk Revit 2013 Projects\046-11005-500_Central_mbsapulayan.rvt

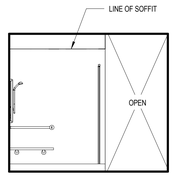

A1 M STAFF TLT & SHR - N
SCALE: 1/4" = 1'-0"

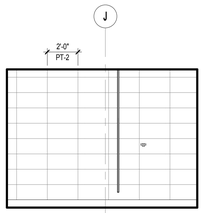

A2 M STAFF TLT & SHR - E
SCALE: 1/4" = 1'-0"

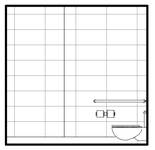

A3 M STAFF TLT & SHR - S
SCALE: 1/4" = 1'-0"

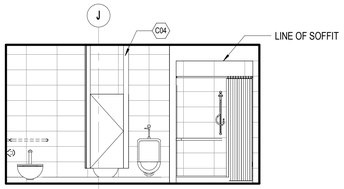

A4 M STAFF TLT & SHR - W
SCALE: 1/4" = 1'-0"

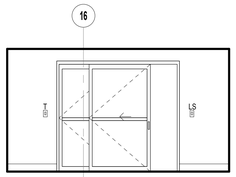

A6 LOCKER RM VESTIBULE - N
SCALE: 1/4" = 1'-0"

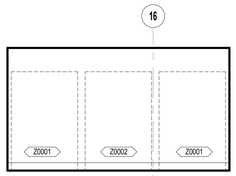

A7 LOCKER RM VESTIBULE - S
SCALE: 1/4" = 1'-0"

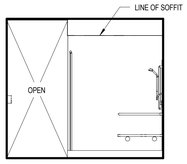

B1 F STAFF TLT & SHR - N
SCALE: 1/4" = 1'-0"

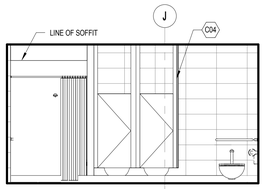

B2 F STAFF TLT & SHR - E
SCALE: 1/4" = 1'-0"

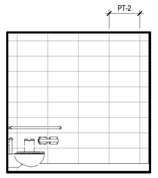

B3 F STAFF TLT & SHR - S
SCALE: 1/4" = 1'-0"

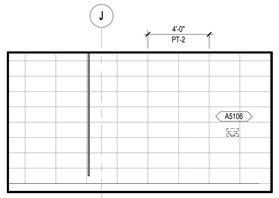

B4 F STAFF TLT & SHR - W
SCALE: 1/4" = 1'-0"

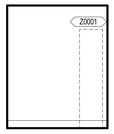

B6 LOCKER ROOM VESTIBULE - E
SCALE: 1/4" = 1'-0"

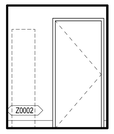

B7 LOCKER ROOM VESTIBULE - W
SCALE: 1/4" = 1'-0"

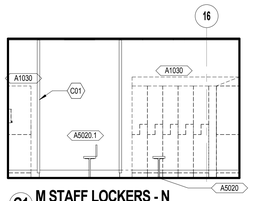

C1 M STAFF LOCKERS - N
SCALE: 1/4" = 1'-0"

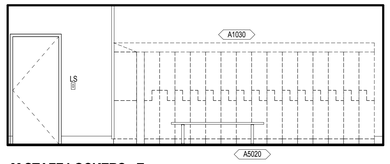

C2 M STAFF LOCKERS - E
SCALE: 1/4" = 1'-0"

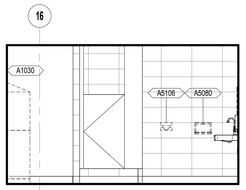

C4 M STAFF LOCKERS - S
SCALE: 1/4" = 1'-0"

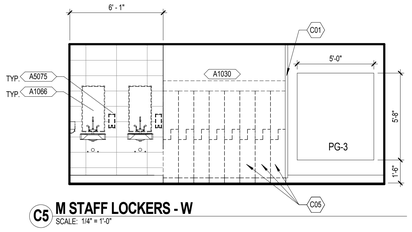

C5 M STAFF LOCKERS - W
SCALE: 1/4" = 1'-0"

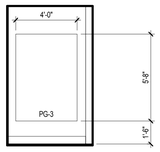

C6 M STAFF LOCKERS
SCALE: 1/4" = 1'-0"

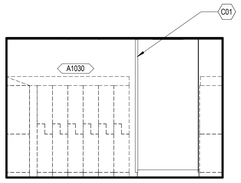

D1 F STAFF LOCKERS - N
SCALE: 1/4" = 1'-0"

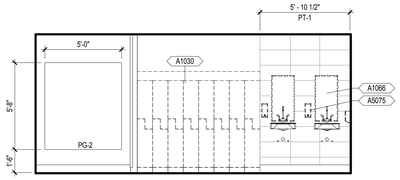

D2 F STAFF LOCKERS - E
SCALE: 1/4" = 1'-0"

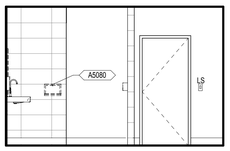

D4 F STAFF LOCKERS - S
SCALE: 1/4" = 1'-0"

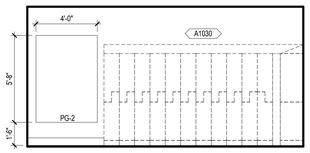

D5 F STAFF LOCKERS - W
SCALE: 1/4" = 1'-0"

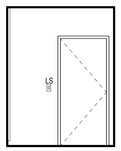

D6 F STAFF LOCKERS
SCALE: 1/4" = 1'-0"

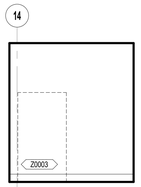

E1 ROBOTIC STORAGE - N
SCALE: 1/4" = 1'-0"

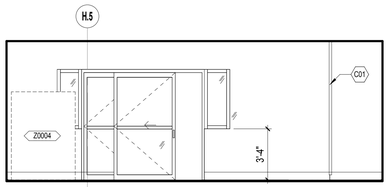

E2 ROBOTIC STORAGE - E
SCALE: 1/4" = 1'-0"

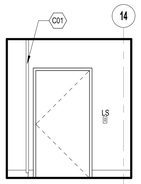

E4 ROBOTIC STORAGE - S
SCALE: 1/4" = 1'-0"

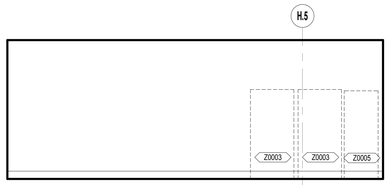

E5 ROBOTIC STORAGE - W
SCALE: 1/4" = 1'-0"

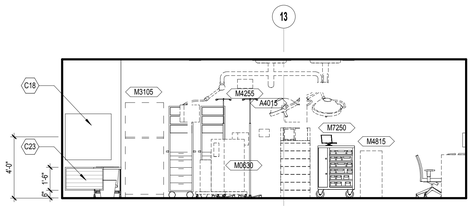

F1 OPERATING ROOM - N
SCALE: 1/4" = 1'-0"

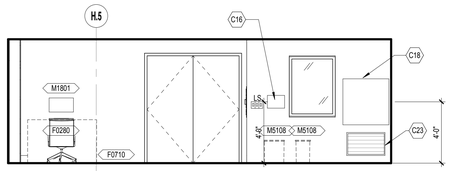

F3 OPERATING ROOM - E
SCALE: 1/4" = 1'-0"

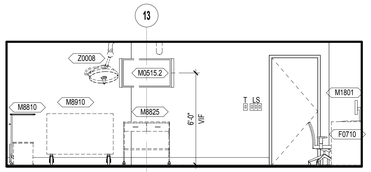

F5 OPERATING ROOM - S
SCALE: 1/4" = 1'-0"

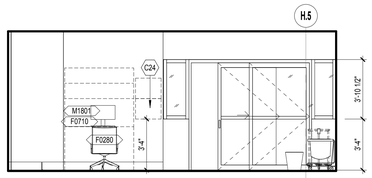

F7 OPERATING ROOM - W
SCALE: 1/4" = 1'-0"

SHEET NOTES

1. FOR STANDARD MOUNTING HEIGHTS AND ADA CLEARANCES, REFER TO THE ACCESSIBILITY SHEETS GI004-GI007.

2. ACCENT WALL FINISHES ARE NOTED ON INTERIOR ELEVATIONS, REFER TO FINISH PLANS, AI101 AND AI102 AND MATERIAL SCHEDULES, AI301 FOR ADDITIONAL FINISH INFO.

3. REFER TO EQUIPMENT PLANS, QH101 AND EQUIPMENT LIST, QH201

INTERIOR ELEVATION KEYNOTES

C01	FLOOR TO CEILING WALL CORNER GUARD, SEE DETAIL F1/AE504
C04	CEILING MOUNTED TOILET PARTITION, SEE DETAIL D8/AE610
C05	ACCESSIBLE LOCKER, SEE DETAIL C5/GI005
C16	RECESSED MEDICAL GAS ALARM PANEL, SEE F1/AE504, F3/AE504 AND PLUMBING DRAWINGS
C18	RECESSED ISOLATED POWER PANEL, SEE F1/AE504, F3/AE504 AND ELECTRICAL DRAWINGS
C23	LOW WALL EXHAUST, SEE MECHANICAL DRAWINGS
C24	SURGICAL LIGHT PANELS, SEE ELECTRICAL DRAWINGS

INTERIOR ELEVATION LEGEND

T	THERMOSTAT, SEE GI007 FOR MOUNTNG HEIGHT
LS	LIGHT SWITCH, SEE GI007 FOR MOUNTNG HEIGHT

CONSTRUCTION DOCUMENTS
FULLY SPRINKLERED

No.	Description	Date
1	SCHEMATIC DESIGN (SD)	10/20/2015
2	DESIGN DEVELOPMENT (DD)	01/18/2016
3	CONSTRUCTION DOCUMENTS (CD)	03/30/2016

CONSULTANTS:

(SEE PROJECT TEAM DIRECTORY ON GI000 COVER SHEET)

Seals and Signatures

LICENSED ARCHITECT
MELE B SADOUKIAN
No. C 32660
EXP. DEC. 10-31-16
STATE OF CALIFORNIA

ARCHITECTS/ENGINEERS:

LEO A DALY
PLANNING
ARCHITECTURE
ENGINEERING
INTERIORS
550 South Hope Street, 27th Floor
Los Angeles, California 90071, USA
213-629-0100 F213-629-0070
EST. 1915

Drawing Title
INTERIOR ELEVATIONS

Approved: Project Director

Project Title
CONSTRUCT OPERATING ROOM #8

Location
11201 BENTON STREET
LOMA LINDA, CA 92357

Date 03/30/2016 | Checked MS | Drawn TV

Project Number 605-14-640

Building Number 1

Drawing Number
AE202

Office of Construction and Facilities Management

Department of Veterans Affairs

VA FORM 08-6231

3/23/2016 3:26:56 PM C:\Users\mhsapulsyan\Documents\Autodesk\Revit 2013 Projects\046-11007-000_Central_mhsapulsyan.rvt

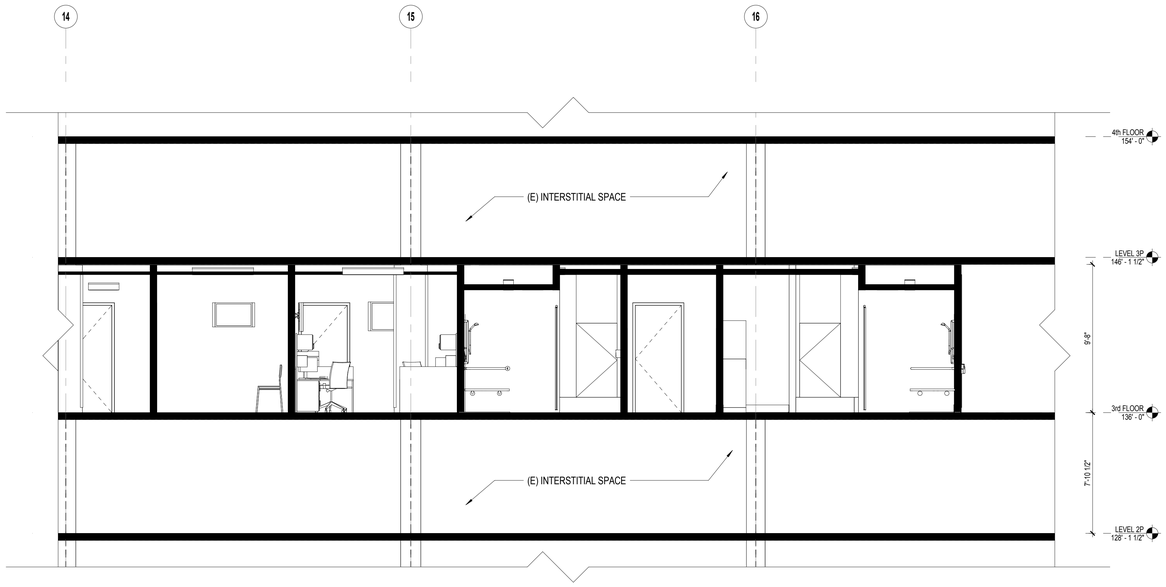

D1 PARTIAL BUILDING SECTION
SCALE: 1/4" = 1'-0"

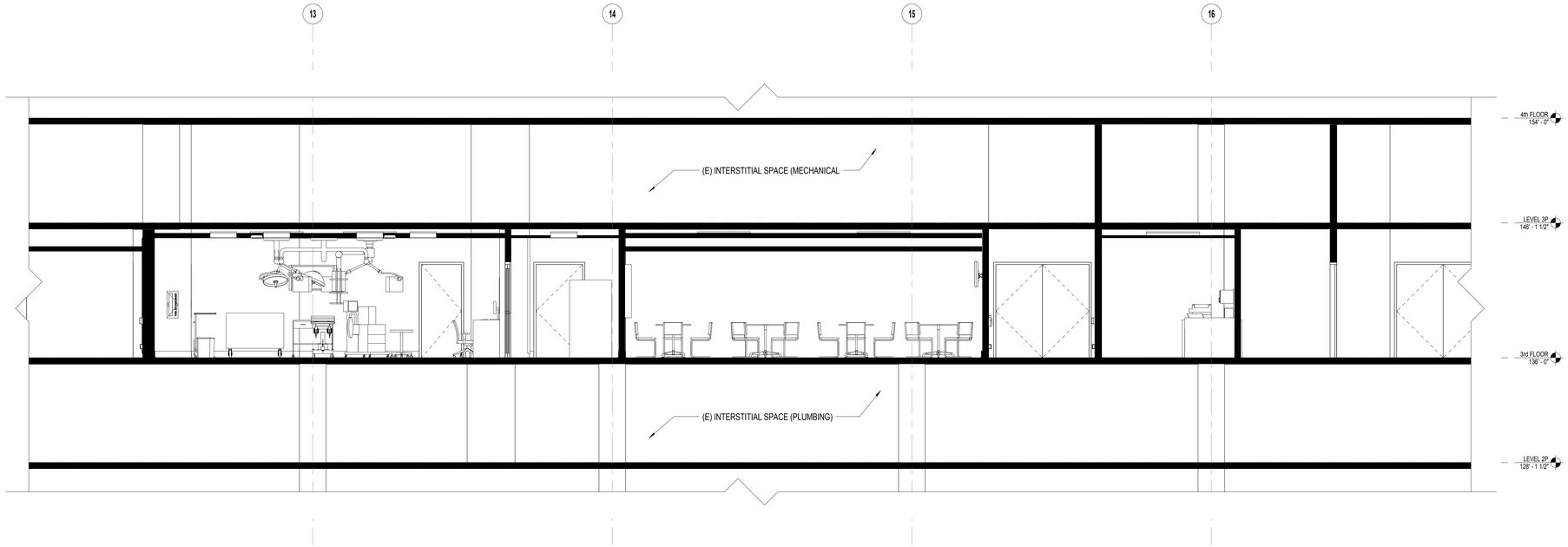

F1 PARTIAL BUILDING SECTION
SCALE: 1/4" = 1'-0"

SHEET NOTES

CONSTRUCTION DOCUMENTS
FULLY SPRINKLERED

No.	Description	Date
1	SCHEMATIC DESIGN (SD)	10/20/2015
2	DESIGN DEVELOPMENT (DD)	01/18/2016
3	CONSTRUCTION DOCUMENTS (CD)	03/30/2016

CONSULTANTS:

(SEE PROJECT TEAM DIRECTORY ON GI000 COVER SHEET)

Seals and Signatures

LICENSED ARCHITECT MICHELLE B SAQUILAYAN No. C 32660 REN. 10-31-16 STATE OF CALIFORNIA

ARCHITECTS/ENGINEERS:

LEO A DALY
PLANNING ARCHITECTURE ENGINEERING INTERIORS
550 South Hope Street, 27th Floor
Los Angeles, California 90071, USA
213-629-0100 F213-629-0070
EST. 1915

Drawing Title
PARTIAL BUILDING SECTIONS (FOR REFERENCE ONLY)

Approved: Project Director

Project Title
CONSTRUCT OPERATING ROOM #8

Location
11201 BENTON STREET
LOMA LINDA, CA 92357

Date	Checked	Drawn
03/30/2016	MS	TV

Project Number
605-14-640

Building Number
1

Drawing Number
AE301

Office of Construction and Facilities Management

Department of Veterans Affairs

3/25/2016 3:26:58 PM C:\Users\mbsaquilayan\Documents\Autodesk\Revit 2013 Projects\046-10057-000_Central_mbsaquilayan.rvt

VA FORM 08-6231

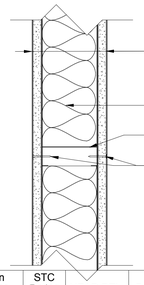

Partition Type	Partition Thickness	STC Rating	HEAD DTL.	BASE DTL.	Code / Agency Listing
A4A	5 1/4"	44			
A4C	5 1/4"	44			
A4C.1	5 1/4"	45			UL U465
A4D	5 1/4"				
A4E	5 1/4"	44			
A8E.1	9 1/4"	45			UL U430

B3 PARTITION TYPE 'A'
SCALE: 3" = 1'-0"

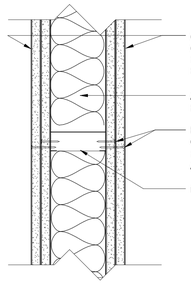

Partition Type	Partition Thickness	STC Rating	HEAD DTL.	BASE DTL.	Code / Agency Listing
B4A.2	6 1/2"	55			UL U411
B8C.2	10 1/2"	55			
B8F.2	10 1/2"	55			UL U430

B5 PARTITION TYPE 'B'
SCALE: 3" = 1'-0"

PARTITION TYPE NOTES:

1. RUN ALL METAL STUDS FROM FLOOR SLAB TO STRUCTURE ABOVE UNLESS OTHERWISE NOTED.
2. ALL METAL STUDS, TRACKS AND FURRINGS SHALL BE 20 GA UNLESS OTHERWISE NOTED.
3. AT WALLS SUPPORTING CASEWORK CABINETS, STUDS AND TRACKS SHALL BE 16 GA UNLESS OTHERWISE NOTED.
4. FOR ONE HOUR FIRE-RATED AND/OR ACOUSTICAL PARTITIONS, SEAL ALL BOUNDARIES AND PENETRATIONS WITH APPROVED ACOUSTICAL SEALANT OR FIRE STOP SYSTEM.
5. REFER TO ROOM FINISH SCHEDULE AND INTERIOR ELEVATIONS FOR WALL FINISHES. SUBSTITUTE GYP BD WITH CEMENTITIOUS BACKER BOARD OVER WATERPROOF MEMBRANE AT TILE LOCATIONS.
6. SMOKE SEAL: SEAL PERIMETER OF PARTITION WITH CONTINUOUS BEAD OF FIRESTOPPING SEALANT. CLOSE ALL GAPS THROUGH OR AROUND PARTITION BY SEALING ALL JOINTS GAPS AROUND OUTLET BOXES AND PENETEATIONS INCLUDING THOSE AROUND FINISHED CEILINGS.

B7 PARTITION TYPE NOTES
SCALE: 3" = 1'-0"

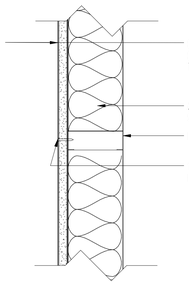

Partition Type	Partition Thickness	STC Rating	HEAD DTL.	BASE DTL.	Code / Agency Listing
D2A	3 1/8"				
D4A	4 5/8"				
D4C	4 5/8"	55			
D4D	4 5/8"				
D4G	4 5/8"	55			
D6D	6 5/8"				
D6G	6 5/8"	55			
D8G	8 5/8"	55			

D3 PARTITION TYPE 'D'
SCALE: 3" = 1'-0"

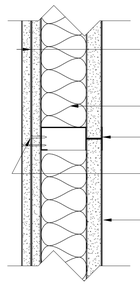

Partition Type	Partition Thickness	STC Rating	HEAD DTL.	BASE DTL.	Code / Agency Listing
H4B.2	5 1/4"	44			UL U415, GA No. WP 7008
H4F.2	5 1/4"	44			UL U415, GA No. WP 7008

D5 PARTITION TYPE 'H'
SCALE: 3" = 1'-0"

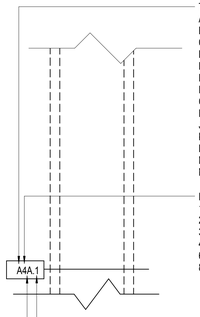

TYPE
A: MTL STUD W/ ONE LAYER GYP BD EA SIDE
B: MTL STUD W/ TWO LAYERS GYP BD EA SIDE
C: MTL STUD WALL W/ ONE LAYER GYP ONE SIDE, 2 LAYERS OTHER SIDE (TAG SIDE W/ 2 LAYERS)
D: MTL STUD W/ ONE LAYER GYP BD ONE SIDE
E: MTL STUD W/ TWO LAYERS OF GYP BD ONE SIDE
F: MTL FURRING Z CLIP W/ ONE LAYER GYP BD ONE SIDE
G: MTL FURRING Z CLIP W/ TWO LAYER GYP BD ONE SIDE
H: MTL STUD SHAFTWALL W/ ONE LAYER GYP BD ONE SIDE
J: MTL STUD SHAFTWALL W/ TWO LAYERS GYP BD ONE SIDE
K: MTL STUD CHASEWALL W/ ONE LAYER GYP BD EA SIDE
L: MTL STUD CHASEWALL W/ TWO LAYERS GYP BD EA SIDE
M: MASONRY / CMU WALL
N: LEAD LINED WALL

FRAMING SIZE
1 - 1 5/8" STUD OR 1 1/2" FURRING Z CLIP
2 - 2 1/2" STUD
3 - 3 5/8" STUD
4 - 4" STUD
6 - 6" STUD
8 - 8" STUD

FIRE / SMOKE RATING *
1 - 1 HOUR FIRE RATED PARTITION
2 - 2 HOUR FIRE RATED PARTITION
B - SMOKE BARRIER
P - SMOKE PARTITION

*: DESIGNATION NOT INDICATED FOR NON - RATED PARTITIONS.

OPTIONS - SEE MATRIX

D7 PARTITION TYPE LEGEND
SCALE: 3" = 1'-0"

ADDITIONAL COMPONENTS	OPTIONS																									NOTES
	A	B	C	D	E	F	G	H	J	K	L	M	N	P	Q	R	S	T	V	W	X	Y	Z			
EXTEND STUDS TO STRUCTURE (FULL HEIGHT)		●				●																				
EXTEND STUDS TO 6" ABOVE CEILING				●			●																			
EXTEND STUDS TO INTERSTITIAL FLR	●		●		●																					
EXTEND GYPSUM BOARD TO STRUCTURE, BOTH SIDES		●				●																				
EXTEND GYPSUM BOARD TO 6" ABOVE CEILING	●			●			●																			
EXTEND GYPSUM BOARD TO THE INSTERSTITIAL FLOOR, BOTH SIDES			●		●																					SEE NOTES 1 & 2 BELOW
ACOUSTIC PARTITION *		●	●		●	●																				SEE NOTES 1 & 2 BELOW
THERMAL INSULATION (EXTERIOR WALLS)																										
LEAD LINING					●	●	●																			SEE NOTE 3 BELOW

* ACOUSTIC PARTITION INCLUDES ACOUSTICAL INSULATION, SEALANT AND OUTLET BOX PADS
1. SEAL PERIMETER OF PARTITION WITH CONTINUOUS BEAD OF ACOUSTICAL SEALANT. CLOSE OFF ALL SOUND-FLAMING PATHS THROUGH OR AROUND PARTITION BY SEALING ALL GAPS AROUND OUTLET BOXES, FIXTURES AND ALL JOINTS AND PENETRATIONS INCLUDING THOSE ABOVE FINISH CEILINGS. ISOLATE PARTITION FROM ALL PIPE AND DUCT PENETRATION S BY STOPPING GYPSUM BOARD A 1/2" MINIMUM TO 1" MAXIMUM FROM PIPE OR DUCT. SEAL GAP BETWEEN GYPSUM BOARD AND PIPES/DUCTS WITH BACKER ROD AND ACOUSTICAL SEALANT.

PROVIDE ACOUSTICAL OUTLET BOX PADS AT ALL ELECTRICAL AND DATA OUTLET BOXES AND ALL ELECTRICAL SWITCH BOXES. MOLD OUTLET BOX PAD CAREFULLY AROUND BOX AFTER BOX IS SECURELY ATTACHED TO STUD AND BEFORE GYPSUM BOARD IS INSTALLED. SEAL ALL OPENINGS WITH OUTLET BOX SEALANT MATERIAL.

2. ACOUSTIC INSULATION (NON-FACED, FRICTION FIT) IN STUD CAVITY. PROVIDE 2-1/2" THICK STUD PARTITIONS AND 3-1/2" THICK INSULATION FOR STUD PARTITIONS THICKER THAN 3-5/8" AT STUD PARTITIONS LESS THAN 2-1/2" THICK. PROVIDE SEMI-RIGID BOARD ACOUSTICAL INSULATION..

3. CONTRACTOR TO ENGAGE A CERTIFIED RADIOLOGICAL PHYSICIST FOR RADIATION SHIELDING DESIGN EVALUATION REPORT.

F7 PARTITION TYPE OPTIONS MATRIX AND NOTES
SCALE: 12" = 1'-0"

CONSTRUCTION DOCUMENTS
FULLY SPRINKLERED

No.	Description	Date
1	SCHEMATIC DESIGN (SD)	10/20/2015
2	DESIGN DEVELOPMENT (DD)	01/18/2016
3	CONSTRUCTION DOCUMENTS (CD)	03/30/2016

CONSULTANTS:
(SEE PROJECT TEAM DIRECTORY ON GI000 COVER SHEET)

Seals and Signatures
LICENSED ARCHITECT MICHELLE B. SADOVAYA LICENSE NO. C 32660 EXP. DEC. 10-31-16 STATE OF CALIFORNIA

ARCHITECTS/ENGINEERS:
LEO A DALY
PLANNING ARCHITECTURE ENGINEERING INTERIORS
550 South Hope Street, 27th Floor
Los Angeles, California 90071, USA
213-629-0100 F213-629-0070
EST. 1915

Drawing Title: **PARTITION TYPES**
Approved: Project Director

Project Title: **CONSTRUCT OPERATING ROOM #8**
Location: 11201 BENTON STREET LOMA LINDA, CA 92357
Date: 03/30/2016 | Checked: MS | Drawn: TV

Project Number: 605-14-640
Building Number: 1
Drawing Number: **AE501**

Office of Construction and Facilities Management
Department of Veterans Affairs

VA FORM 08-6231

3/25/2016 3:27:00 PM C:\Users\msbsapilayan\Documents\Autodesk Revit 2013 Projects\046-16057-000_Central_msbsapilayan.rvt

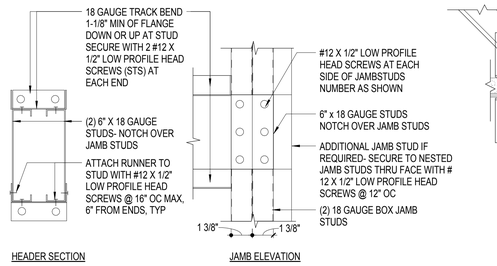

A MAX SPAN 12'-0"

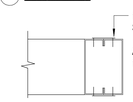

B PLAN - ALL SPANS

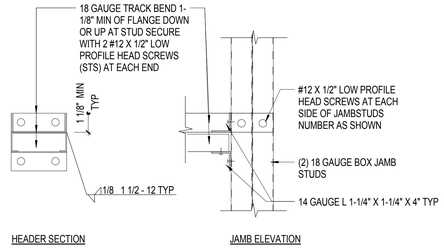

C MAX SPAN 4'-6"

C1 INTERIOR NON-LOAD BEARING LINTELS
SCALE: 3" = 1'-0"

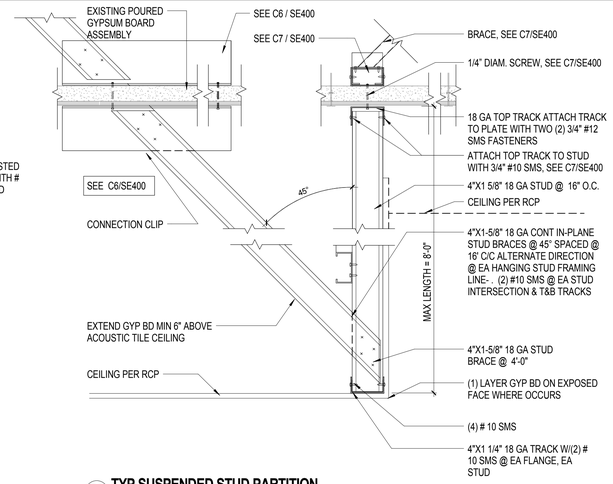

B3 TYP SUSPENDED STUD PARTITION
SCALE: 1 1/2" = 1'-0"

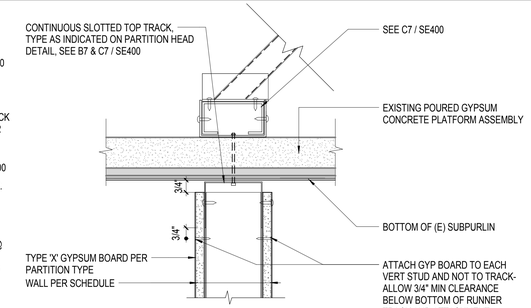

A TOP TRACK PERPENDICULAR TO FLUTES

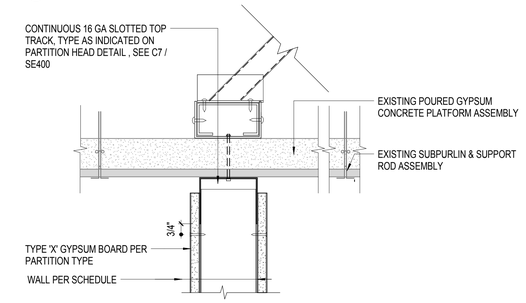

B TOP TRACK PARALLEL TO FLUTES

C5 DT TYPICAL STUD PARTTION (FLOOR SUPPORTED) HEAD ANCHORAGE
SCALE: 3" = 1'-0"

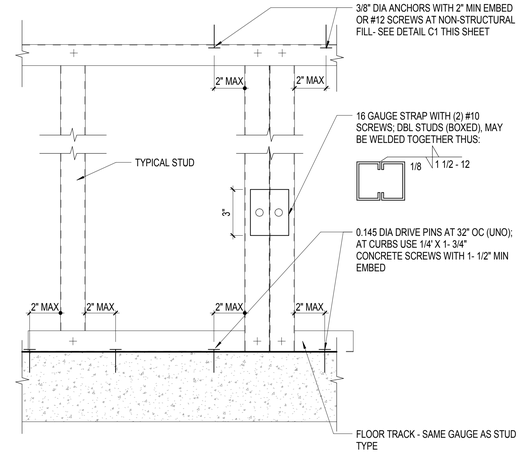

B7 TYP BOT. TRACK ANCHORAGE
SCALE: 3" = 1'-0"

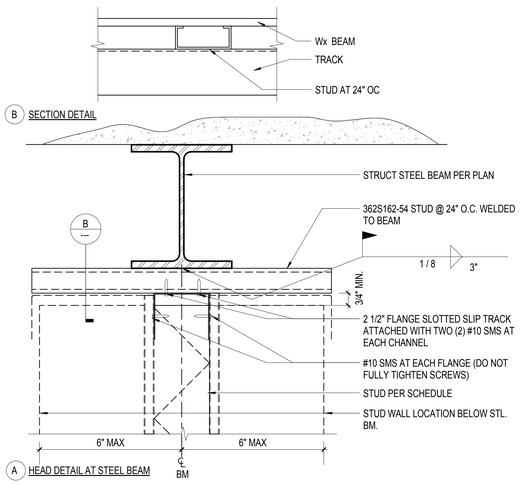

B SECTION DETAIL

A HEAD DETAIL AT STEEL BEAM

D7 TYPICAL HEAD AT PARTITIONS PARALLEL TO BEAMS
SCALE: 3" = 1'-0"

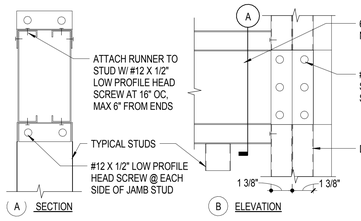

D1 SILL AT 12'-0" MAX OPENING
SCALE: 3" = 1'-0"

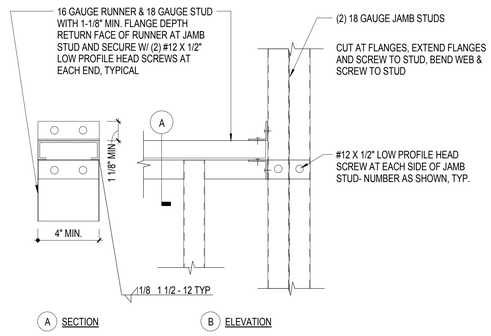

D3 SILL AT OPENINGS - 4'-0" MAX
SCALE: 3" = 1'-0"

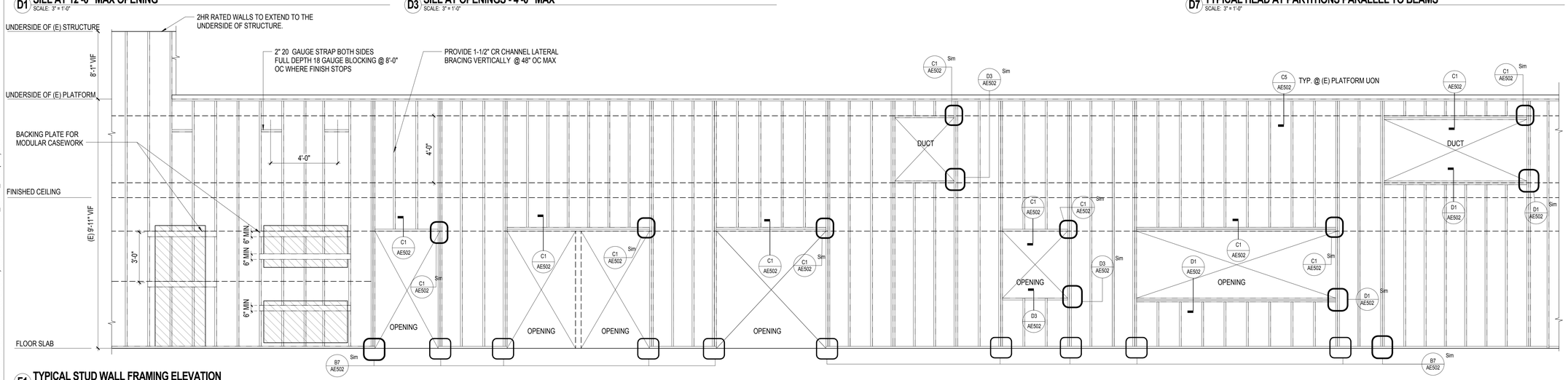

F1 TYPICAL STUD WALL FRAMING ELEVATION
SCALE: 3/8" = 1'-0"

SHEET NOTES

1. CAUTION: THE PURPOSE OF THIS SHEET IS TO DESCRIBE THE METAL FRAMING SYSTEM REQUIRED. AS A DRAWING INTENDED TO ILLUSTRATE AN OVERALL SYSTEM OF CONSTRUCTION, THIS SHEET MAY REFERENCE OR SHOW CONDITIONS WHICH DO NOT DIRECTLYAPPLY TO THIS PROJECT. REFER TO THE PROJECT FLOOR PLANS, REFLECTED CEILING PLANS, BUILDING SECTIONS, WALL SECTIONS, AND STRUCTURAL DRAWINGS TO DETERMINE WHICH CONDITIONS EXIST AND WHICH DETAILS APPLY.

2. UTILIZE FRAMING MEMBERS OF TYPE AND DEPTH SHOWN BY THE "PARTITION SCHEDULE" ON AE501 (OR IF NOT SCHEDULED IN THE CASE OF EXT PERIMETER FRAMING, AS INDICATED BY WALL SECTIONS) METAL STUDS HAVING A HEAVIER GAGE THAN INDICATED AS MIN MAY BE REQUIRED TO SEE STUD MANUFACTURER LIMITING HEIGHT.

3. SEE DET 54/-FOR TYP BLOCKING, BRIDGING, AND REINFORCEMENT REQUIREMENTS SUPPLEMENTARY FRAMING, ADDL BLOCKING, ADDL BRIDGING, PARTITION STIFFNERS, HORIZONTAL BRACING, AND CHANNEL REINFORCEMENT NOT INDICATED HERE MAY ALSO BE NECESSARY AND SHALL BE PROVIDED AS REQUIRED REFER TO THE SPECIFICATIONS.

4. PROVIDE 1-1/2" METAL CHANNEL BRIDGING IN LIEU ¾" METAL CHANNEL BRIDGING AT PARTITION FRAMING UTILIZING TYPE C METAL STUDS, TYPICAL

5. EXCEPT WHERE SPECIFIC EXTERIOR PERIMETER FRAMING ELEVATIONS HAVE BEEN PROVIDED, THE PTN FRAMING ELEVATIONS SHOWN ON THIS SHEET ALSO APPLY TO METAL STUD FRAMING AT THE EXTERIOR PERIMETER

6. FOR ALL METAL STUD FRAMING, ISOLATE FRAMING FROM TRANSER OF STRUCTURAL LOADING TO FRAMING, BOTH HORIZ AND VERT. SEE INDICATED DETAILS

7. WHERE FIRE AND/OR SMOKE DAMPERS ARE REQUIRED (SEE MECHANICAL DRAWINGS), FRAME AROUND UTILITY OPENINGS AS ILLUSTRATED BY DETAIL F1/- LOCATE DUCTWORK TO ALLOW 5' (OR GREATER) FRAMING DEPTH ABOVE THE DUCT AND BELOW THE STRUCTURE ABOVE WHERE FRAMING AT HEAD OF OPENING CANNOT SPAN BET FLOOR SUPPORTED STUDS EACH END, SUSPEND FRAMING FROM STRUCTURE ABOVE AS INDICATED BY DETAIL A6/SE400

8. SUSPENDED METAL STUD FRAMING OCCURS WHERE FRAMING AT HEAD OF OPENING CANNOT SPAN BETWEEN FLOOR SUPPORTED STUDS AT EACH END DUE TO INTERRUPTION BY STRUCTURAL MEMBER AT LOCATIONS ISOLATED WITHIN CEILINGS WHERE NO ADJACENT FLOOR SUPPORTED FRAMING OCCURS (SEE ALSO CEILING SYSTEMS DETAILS) LENGTH OF SPAN AT HEAD OF OPENING IS GREATER THAN 12'-0"

CONSTRUCTION DOCUMENTS
FULLY SPRINKLERED

No.	Description	Date
1	SCHEMATIC DESIGN (SD)	10/20/2015
2	DESIGN DEVELOPMENT (DD)	01/18/2016
3	CONSTRUCTION DOCUMENTS (CD)	03/30/2016

CONSULTANTS:

(SEE PROJECT TEAM DIRECTORY ON GI000 COVER SHEET)

Seals and Signatures

LICENSED ARCHITECT MICHELLE B. SAQUILAYAN C. 32660 EXP. 10-31-16 STATE OF CALIFORNIA

ARCHITECTS/ENGINEERS:

LEO A DALY
PLANNING ARCHITECTURE ENGINEERING INTERIORS
550 South Hope Street, 27th Floor
Los Angeles, California 90071, USA
213-629-0100 F213-629-0070
EST. 1915

Drawing Title: PARTITION DETAILS

Approved: Project Director

Project Title: CONSTRUCT OPERATING ROOM #8

Location: 11201 BENTON STREET LOMA LINDA, CA 92357

Date: 03/30/2016 | Checked: MS | Drawn: TV

Project Number: 605-14-640

Building Number: 1

Drawing Number: AE502

Office of Construction and Facilities Management

Department of Veterans Affairs

VA FORM 08-6231

3/25/2016 3:27:02 PM C:\Users\mbsaquilayan\Documents\Autodesk Revit 2013 Projects\046-10057-000_Central_mbsaquilayan.rvt

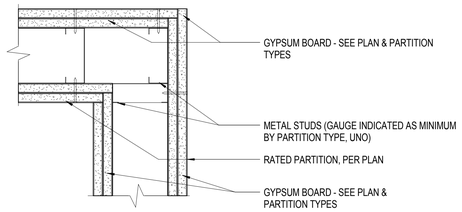

E TYPICAL CORNER (PLAN)

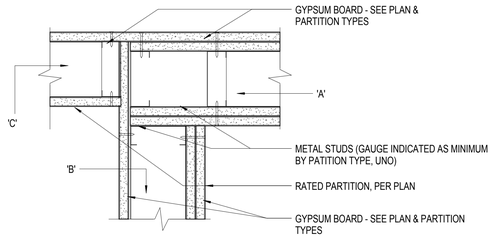

F THREE' WAY INTERSECTION
*DIFFERENT PARTITION TYPES)

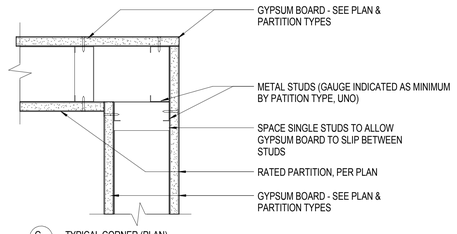

G TYPICAL CORNER (PLAN)

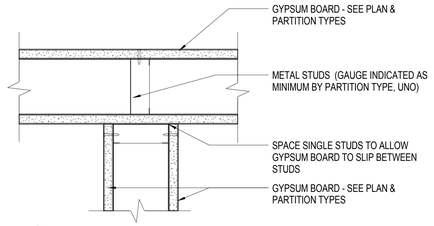

H THREE WAY INTERSECTION (PLAN)

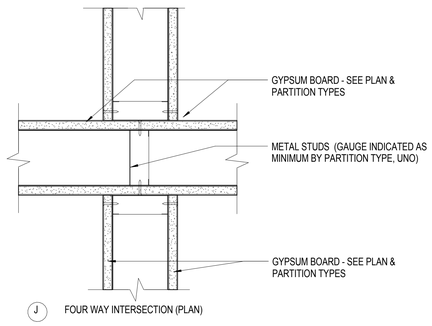

J FOUR WAY INTERSECTION (PLAN)

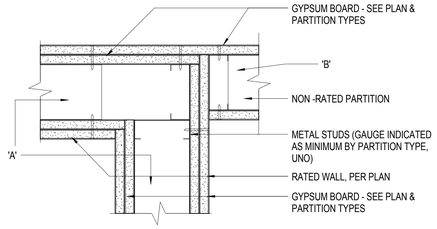

A THREE WAY INTERSECTION
PRIORITY PARTITION CHANGES DIRECTION

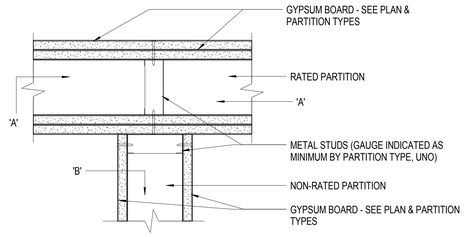

B THREE WAY INTERSECTION:
PRIORITY PARTITION IS CONTINUOUS

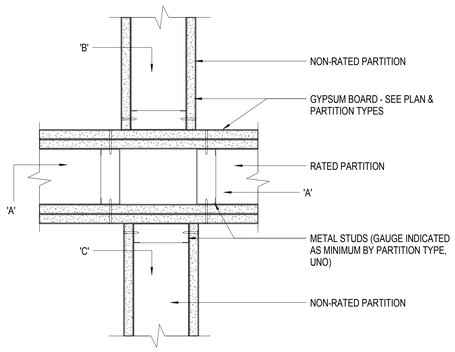

C FOUR WAY INTERSECTION:
PRIORITY PARTITION IS CONTINUOUS

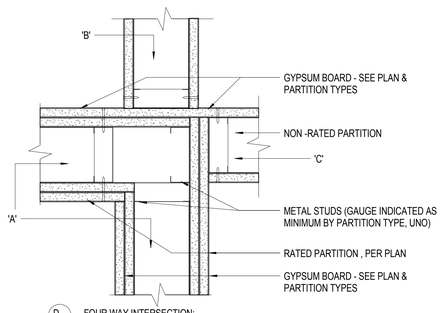

D FOUR WAY INTERSECTION:
PRIORITY PARTITION CHANGES DIRECTION

NOTE: REFER TO PLANS, PARTITION TYPES, RCP & FOR FINISHES SPECIAL CONDITIONS AND NOTES.
THE PRIORITY OF PARTITIONS IS DETERMINED AS FOLLOWS:

- FIRE RATED PARTITIONS HAVE PRIORITY OVER NON-RATED PARTITIONS
- PARTITIONS WITH GREATER FIRE RATING HAVE PRIORITY OVER THOSE WITH A LESSER RATING
- SMOKE-SEALED PARTITIONS HAVE PRIORITY OVER NON-SMOKE-SEALED PARTITIONS

F1 TYPICAL CORNER AND INTERSECTION PARTITION DETAILS

SCALE: 3" = 1'-0"

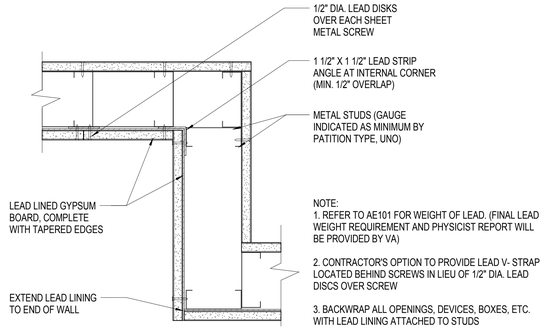

NOTE:
1. REFER TO AE101 FOR WEIGHT OF LEAD. (FINAL LEAD WEIGHT REQUIREMENT AND PHYSICIST REPORT WILL BE PROVIDED BY VA)

2. CONTRACTOR'S OPTION TO PROVIDE LEAD V- STRAP LOCATED BEHIND SCREWS IN LIEU OF 1/2" DIA. LEAD DISCS OVER SCREW

3. BACKWRAP ALL OPENINGS, DEVICES, BOXES, ETC. WITH LEAD LINING ATTACHED TO STUDS

B4 LEAD LINED PARTITION

SCALE: 3" = 1'-0"

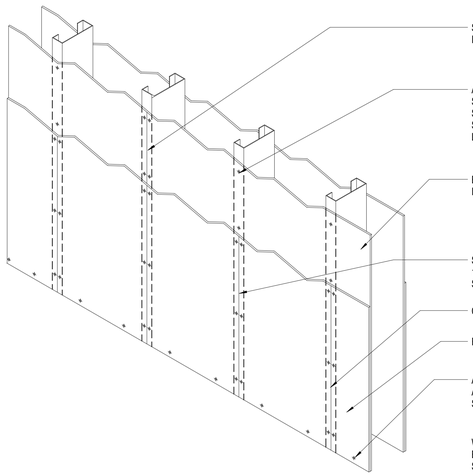

F5 MULTILAYER GYPSUM BOARD ATTACHMENT REQUIREMENTS

SCALE: 1 1/2" = 1'-0"

SHEET NOTES

CONSTRUCTION DOCUMENTS
FULLY SPRINKLERED

No.	Description	Date
1	SCHEMATIC DESIGN (SD)	10/20/2015
2	DESIGN DEVELOPMENT (DD)	01/18/2016
3	CONSTRUCTION DOCUMENTS (CD)	03/30/2016

CONSULTANTS:

(SEE PROJECT TEAM DIRECTORY ON GI000 COVER SHEET)

Seals and Signatures

LICENSED ARCHITECT — MICHAEL B. SADULLAH — No. C 32660 — REN. 10-31-16 — STATE OF CALIFORNIA

ARCHITECTS/ENGINEERS:

LEO A DALY
PLANNING ARCHITECTURE ENGINEERING INTERIORS
550 South Hope Street, 27th Floor
Los Angeles, California 90071, USA
213-629-0100 F213-629-0070
EST. 1915

Drawing Title: **PARTITION DETAILS**

Approved: Project Director

Project Title: **CONSTRUCT OPERATING ROOM #8**

Location: 11201 BENTON STREET, LOMA LINDA, CA 92357

Date: 03/30/2016 | Checked: MS | Drawn: TV

Project Number: 605-14-640

Building Number: 1

Drawing Number: **AE503**

Office of Construction and Facilities Management

Department of Veterans Affairs

VA FORM 08-6231

12/23/2016 3:27:03 PM C:\Users\mhsapulsyan\Documents\Autodesk\Revit 2013 Projects\046-11005-000_Central_mhsapulsyan.rvt

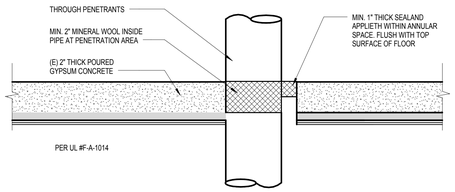

C1 GYPSUM FLOOR THROUGH PENETRATION DETAIL
SCALE: 3" = 1'-0"

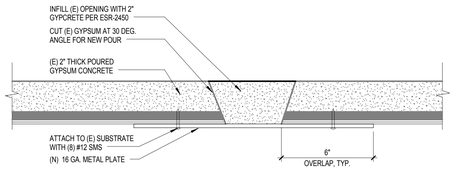

D1 GYPSUM FLOOR INFILL
SCALE: 3" = 1'-0"

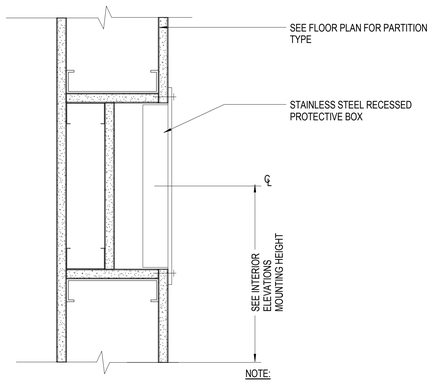

NOTE:

2 LAYERS OF GYPSUM BOARD ON A 2-HR RATED WALL - UL V438

1 LAYER OF GYPSUM BOARD ON A 1-HR RATED WALL - GYPSUM ASSOCIATION FILE NUMBER: WP 134

OMIT GYP. BD. AND FRAMING BEHIND CABINET AT NON-RATED WALLS

F1 RECESSED PROTECTIVE BOX
SCALE: 3" = 1'-0"

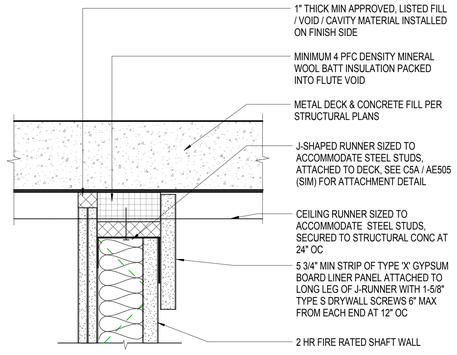

B - TOP TRACK PERPENDICULAR TO FLUTES

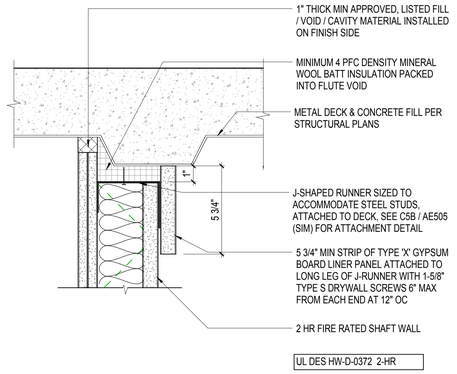

A - TOP TRACK PARALLEL TO FLUTES

D3 FIRE RATED SHAFT PARTITION- HEAD
SCALE: 3" = 1'-0"

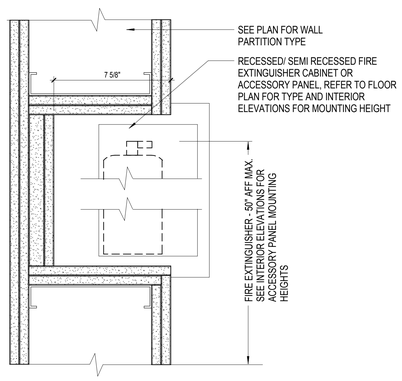

PER IB TABLE 721.1 #10

F3 SEMI RECESSED FIRE EXTINGUISHER / ACCESSORY PANEL - ALT DTL
SCALE: 3" = 1'-0"

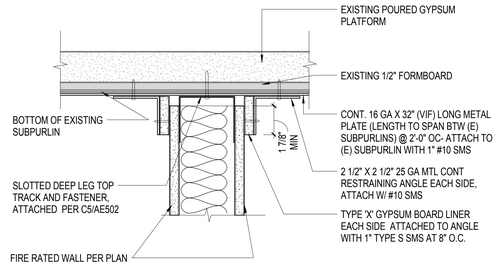

B - TOP TRACK AT UNDERSIDE OF PLATFORM PERPENDICULAR TO EXISTING SUBPURLINS

UL DES HW-D-0001 1-HR
UL DES HW-D-0002 2-HR

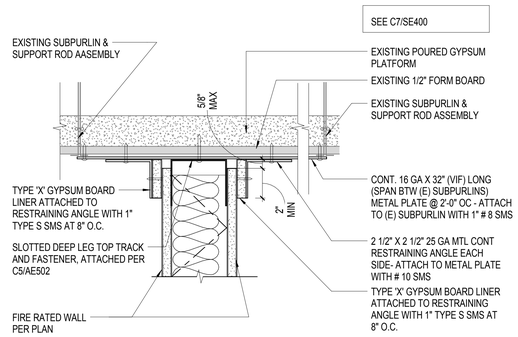

A - TOP TRACK AT UNDERSIDE OF PLATFORM PARALLEL TO EXISTING SUBPERLINS

UL DES HW-D-0001 1-HR
UL DES HW-D-0002 2-HR

D5 FIRE RATED PARTITION - HEAD
SCALE: 3" = 1'-0"

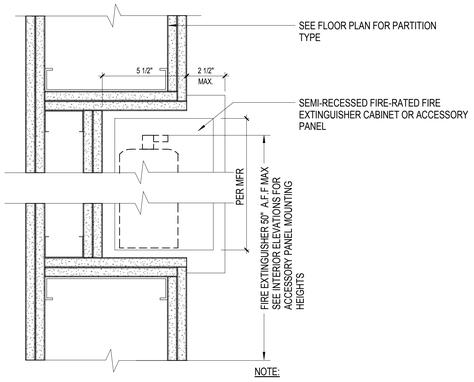

NOTE:

2 LAYERS OF GYPSUM BOARD ON A 2-HR RATED WALL - UL V438

1 LAYER OF GYPSUM BOARD ON A 1-HR RATED WALL - GYPSUM ASSOCIATION FILE NUMBER: WP 134

OMIT GYP. BD. AND FRAMING BEHIND CABINET AT NON-RATED WALLS

F5 SEMI RECESSED FIRE EXTINGUISHER CABINET / ACCESSORY PANEL
SCALE: 3" = 1'-0"

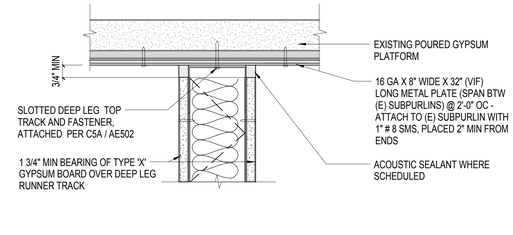

B - TOP TRACK AT UNDERSIDE OF PLATFORM PERPENDICULAR TO EXISTING SUBPURLINS

SEE C7/SE400

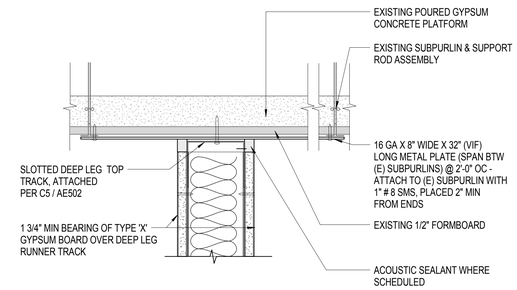

A - TOP TRACK AT UNDERSIDE OF PLATFORM PARALLEL TO EXISTING SUBPERLINS

D7 ACOUSTICAL NON-COMBUSTIBLE NON-RATED PARTTION HEAD
SCALE: 3" = 1'-0"

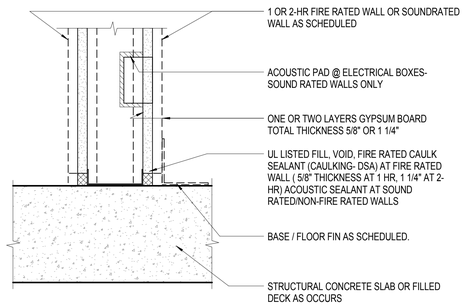

NOTES:
1. JOINT SIMILAR AT FIRE AND/OR SOUND RATED WALL VERTICAL TERMINATION JOINT AT CONCRETE OR MASONRY WALL
2. JOINT SIMILAR AT SOUND RATED HEAD OF WALL JOINT.

UL DES BW-S-0001 (1 & 2HR) FLOOR JOINT
UL DES WW-D-0040 (1 & 2HR) WALL JOINT

F7 FIRE RATED / SOUND RATED PARTITION- BASE
SCALE: 3" = 1'-0"

CONSTRUCTION DOCUMENTS
FULLY SPRINKLERED

No.	Description	Date
1	SCHEMATIC DESIGN (SD)	10/20/2015
2	DESIGN DEVELOPMENT (DD)	01/18/2016
3	CONSTRUCTION DOCUMENTS (CD)	03/30/2016

CONSULTANTS:

(SEE PROJECT TEAM DIRECTORY ON GI000 COVER SHEET)

Seals and Signatures

LICENSED ARCHITECT MICHELLE B SADOUGHI No. C 32660 EXP. DEN. 10-31-16 STATE OF CALIFORNIA

ARCHITECTS/ENGINEERS:

LEO A DALY
PLANNING ARCHITECTURE ENGINEERING INTERIORS
550 South Hope Street, 27th Floor
Los Angeles, California 90071, USA
213-629-0100 F213-629-0070
EST. 1915

Drawing Title: **PARTITION DETAILS AND MISC. DETAILS**

Approved: Project Director

Project Title: **CONSTRUCT OPERATING ROOM #8**

Location: 11201 BENTON STREET LOMA LINDA, CA 92357

Date: 03/30/2016 | Checked: MS | Drawn: TV

Project Number: 605-14-640

Building Number: 1

Drawing Number: **AE504**

Office of Construction and Facilities Management

Department of Veterans Affairs

VA FORM 08-6231

3/25/2016 5:33:08 PM C:\Users\mhsapulayan\Documents\Autodesk Revit 2013 Projects\046-10037-000_Central_mhsapulayan.rvt

DOOR AND HARDWARE SCHEDULE																
DOOR NO.	ROOM NAME	DOOR WIDTH	DOOR HEIGHT	HARDWARE SET	DOOR TYPE	DOOR MAT'L	DOOR FIN.	FRAME TYPE	FRAME MAT'L	FRAME FIN.	DOOR HEAD DTL.	DOOR JAMB DTL.	DOOR SILL DTL.	FIRE RATING	DOOR STC RATING	REMARKS
3rd FLOOR																
3F-01	ANESTHESIA CHIEF OFFICE	3'-0"	7'-0"	1	A	SCW	IRP	F5	HM	IRP	C1/AE601	C2/AE601		-		
3F-02	ANESTHESIA WORKSTATIONS	3'-0"	7'-0"	2	A	SCW	IRP	F5	HM	IRP	C1/AE601	C2/AE601		C		
3F-02A	MEDICATION RM	3'-0"	7'-0"	3	A	SCW	IRP	F1	HM	IRP	C1/AE601	C2/AE601		C	45	CR
3F-03	STAFF LOUNGE / BREAKROOM	3'-0"	7'-0"	3	A	SCW	IRP	F5	HM	IRP	C1/AE601	C2/AE601		C	45	CR
3F-04	ANESTHESIA WORKSTATIONS / MTG ROOM	3'-0"	7'-0"	3	A	SCW	IRP	F5	HM	IRP	C1/AE601	C2/AE601		C	45	CR
3F-04A	ANESTHESIA WORKSTATIONS / MTG ROOM	3'-0"	7'-0"	5	A	SCW	IRP	F5	HM	IRP	C1/AE601	C2/AE601		-	45	
3F-10	ROBOTIC OR	6'-0"	7'-0"	6	CC	SCW	IRP	F4	HM	IRP	C1/AE601	C2/AE601		B		DA, LL, V
3F-10A	ROBOTIC OR	3'-0"	7'-0"	7	C	SCW	IRP	F1	HM	IRP	C1/AE601	C2/AE601		B		LL, V
3F-11	ROBOTIC STORAGE	3'-6"	7'-0"	2	C	SCW	IRP	F1	HM	IRP	C1/AE601	C2/AE601		B		
3F-11A	ROBOTIC OR	8'-0"	7'-2 1/2"		J	GL-2	GL-2		ALUM					-		LL, V; DOOR HARDWARE PER DOOR MFR
3F-22	MNGR. OFFICE	3'-6"	7'-0"	1	A	(E)	(E)	(E)	HM	IRP	C1/AE601	C2/AE601		(E)		
3F-25	VESTIBULE	3'-0"	7'-0"	4	A	SCW	IRP	F1	HM	P-1	C1/AE601	C2/AE601				
3F-26	FEMALE STAFF LOCKERS	3'-0"	7'-0"	5	A	SCW	IRP	F5	HM	IRP	C1/AE601	C2/AE601		-	45	
3F-27	VESTIBULE	8'-0"	7'-2 1/2"		J	GL-3	GL-3		ALUM					-		CR; DOOR HARDWARE PER DOOR MFR
3F-27A	FEMALE STAFF LOCKERS	3'-0"	7'-0"	4	A	SCW	IRP	F1	HM	IRP	C1/AE601	C2/AE601		C		
3F-27B	MALE STAFF LOCKERS	3'-0"	7'-0"	4	A	SCW	IRP	F1	HM	IRP	C1/AE601	C2/AE601		C		
3F-28	MALE STAFF LOCKERS	3'-0"	7'-0"	5	A	SCW	IRP	F1	HM	IRP	C1/AE601	C2/AE601		-	45	
C3-42C	(E) CORR	3'-0"	7'-0"	5	A	HM	IRP	F1	HM	IRP	C1/AE601	C2/AE601		C		
C3-61	(E) CORR	8'-0"	7'-0"	8	CC	HM	IRP	F2	HM	IRP	C1/AE601	C2/AE601		B		PAIR OF 4'-0" DOOR ; P; DA

WINDOW SCHEDULE												
		RO		FRAME								
WINDOW #	WINDOW TYPE	WIDTH	HEIGHT	MATERIAL	FINISH	HEAD DETAIL	JAMB DETAIL	SILL DETAIL	THICKNESS	GLAZING TYPE	HEAD HEIGHT	COMMENTS
W1	FIXED	3'-0"	4'-0"	STEEL	PAINTED	F7/AE601	F7/AE601	F7/AE601	9 MM. MIN.	GL-1	7'-0"	2 HR. RATED; UL #U531; LEAD LINED
SF-1	FIXED	1'-8"	3'-10 1/2"	ALUMINUM	ALUMINUM	E6/AE601	D3/AE610	F6/AE601	4 MM	GL-2	7'-2 1/2"	COORDINATE WITH BREAKAWAY DOOR FRAMING

FRAME TYPES

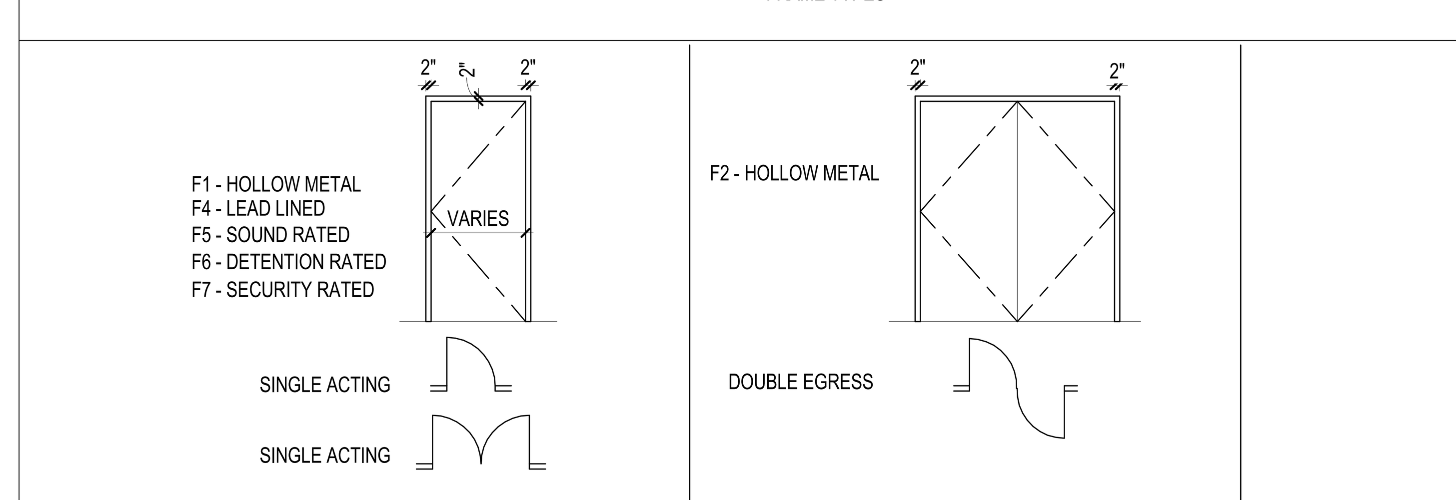

DOOR TYPES

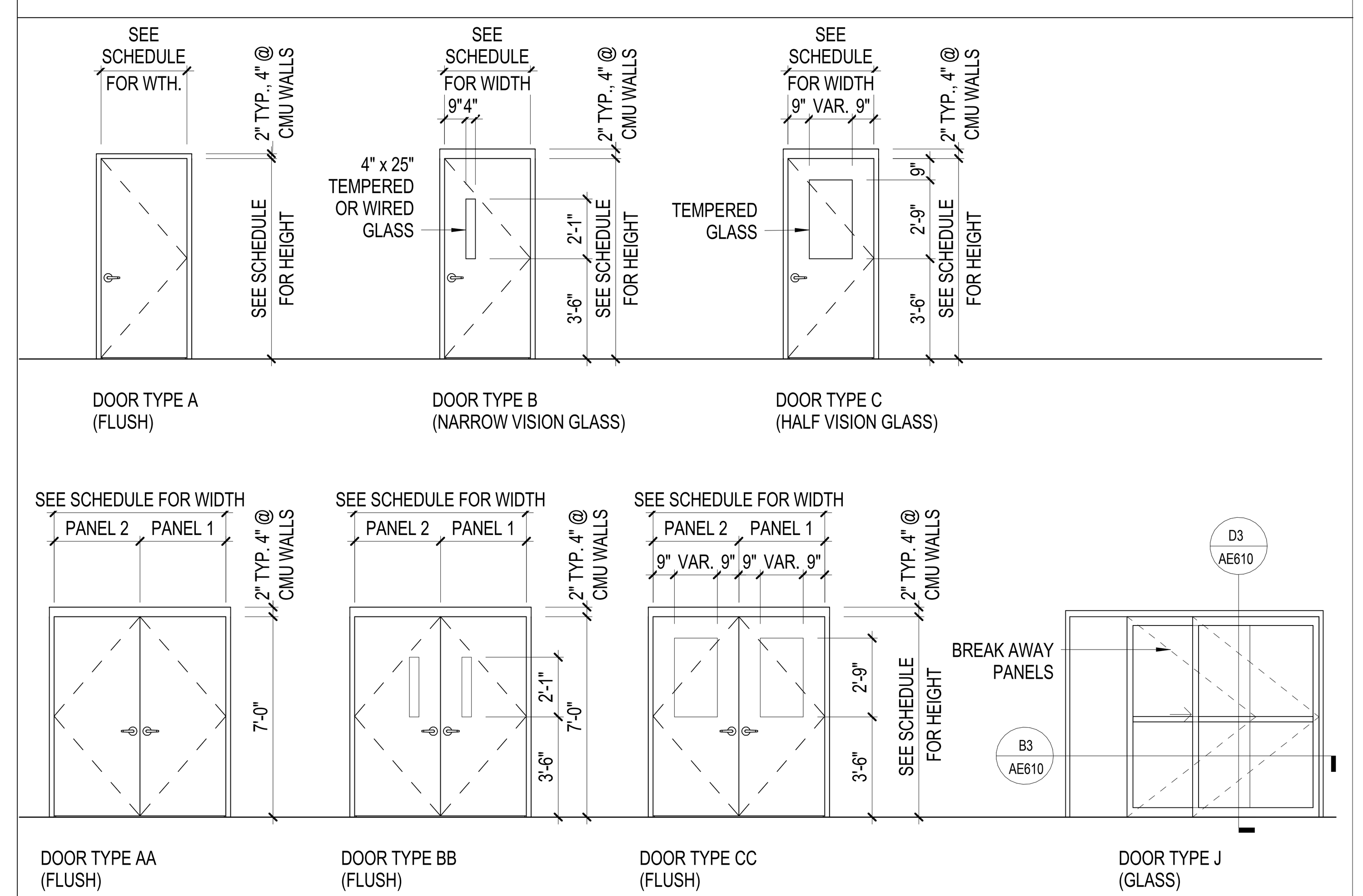

WINDOW & STOREFRONT TYPES

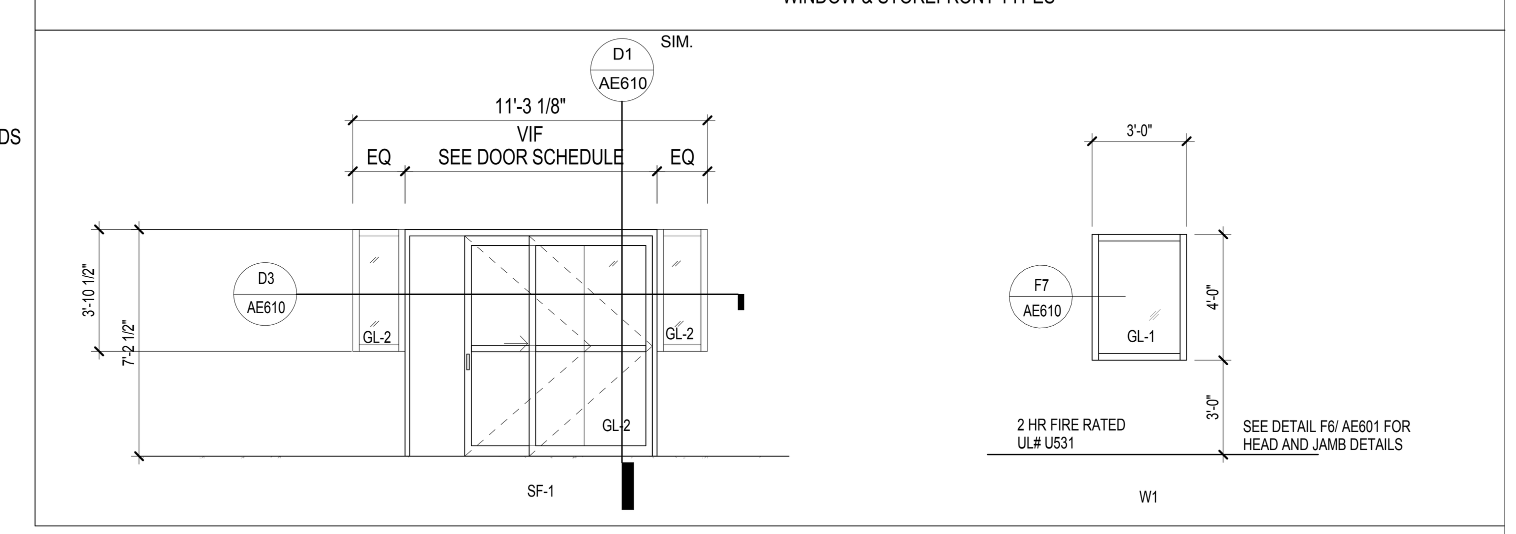

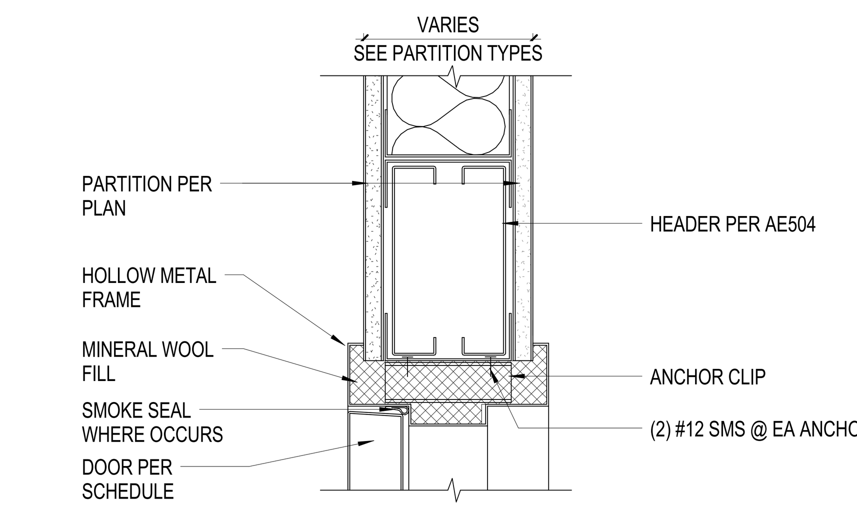

C1 **TYPICAL INTERIOR DOOR HEAD**
SCALE: 3" = 1'-0"

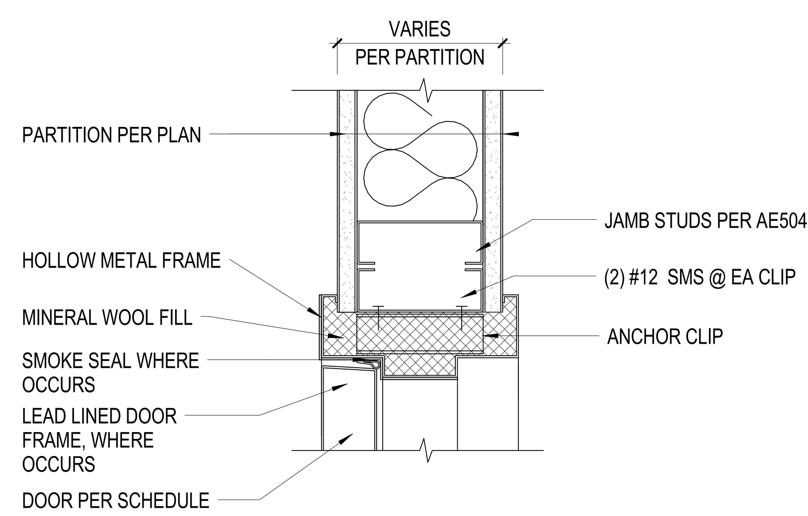

C2 **TYPICAL INTERIOR DOOR JAMB** HEAD SIMILAR
SCALE: 3" = 1'-0"

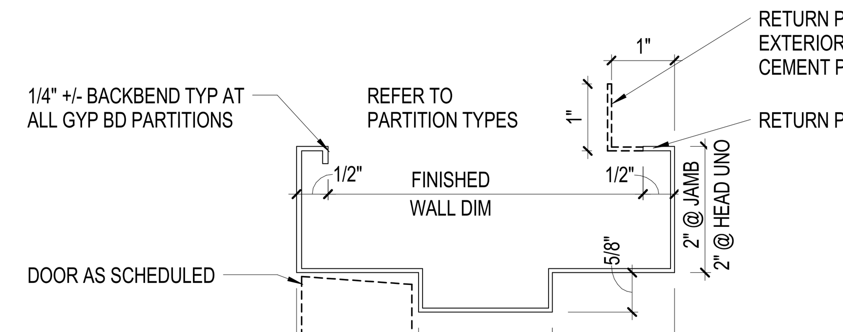

NOTE:

1. ALL FRAMES ARE WELDED UNLESS NOTED OTHERWISE
2. EXTEND STOPS TO FLOOR WHERE WEATHER STRIPPING, AUTOMATIC DOOR BOTTOMS
3. CLOSE BOTTOM OF STOP WELD & GRIND SMOOTH

C4 **TYPICAL HM FRAME PROFILE**
SCALE: 6" = 1'-0"

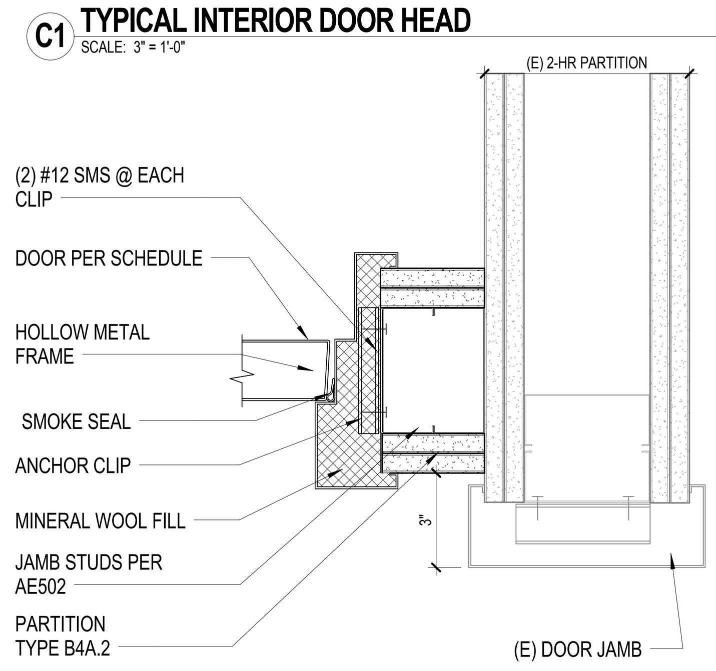

D1 **DOUBLE EGRESS DOOR JAMB AT (E) 2 HR WALL**
SCALE: 3" = 1'-0"

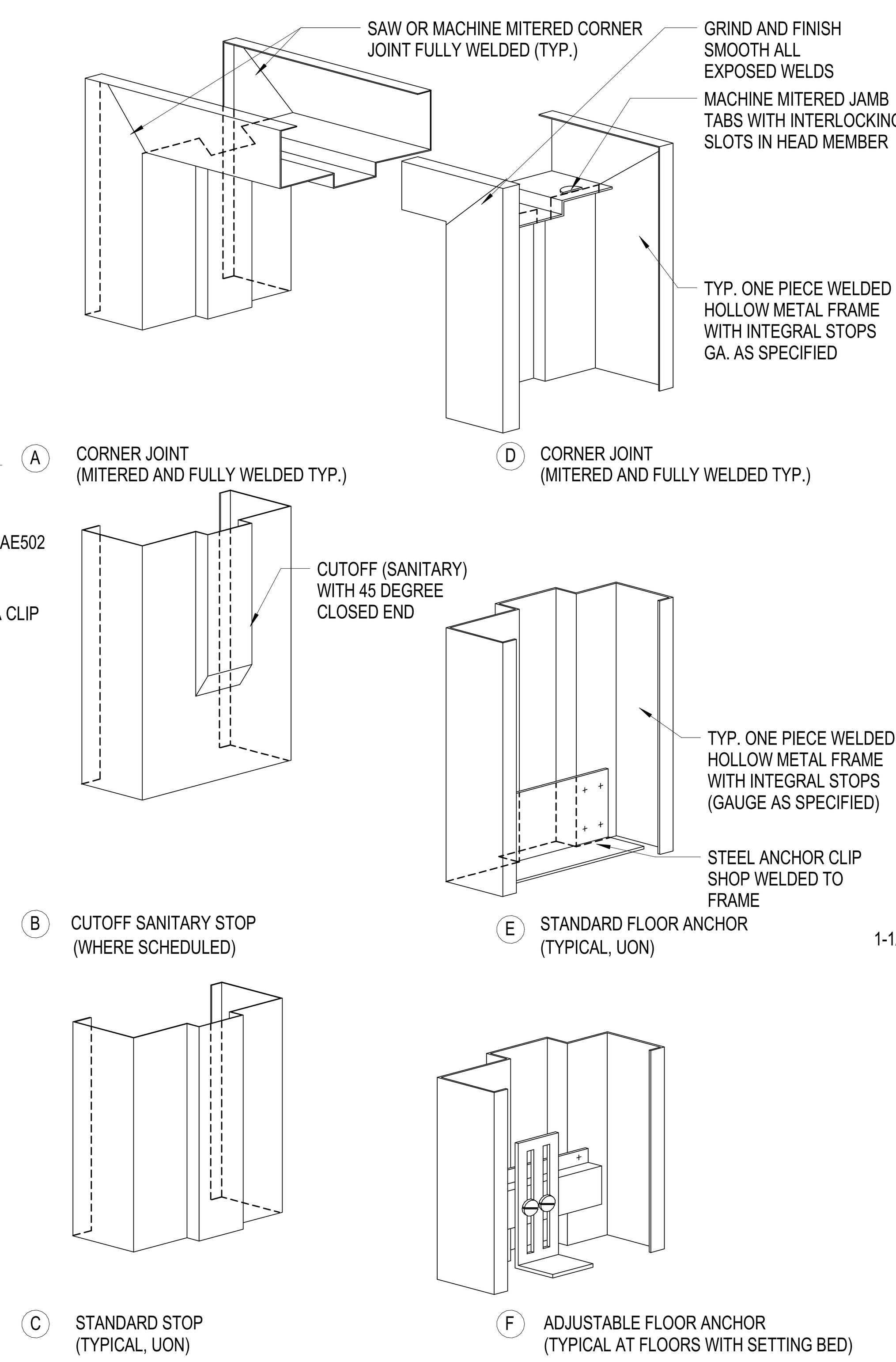

F2 **HOLLOW METAL FRAMES**
SCALE: 3" = 1'-0"

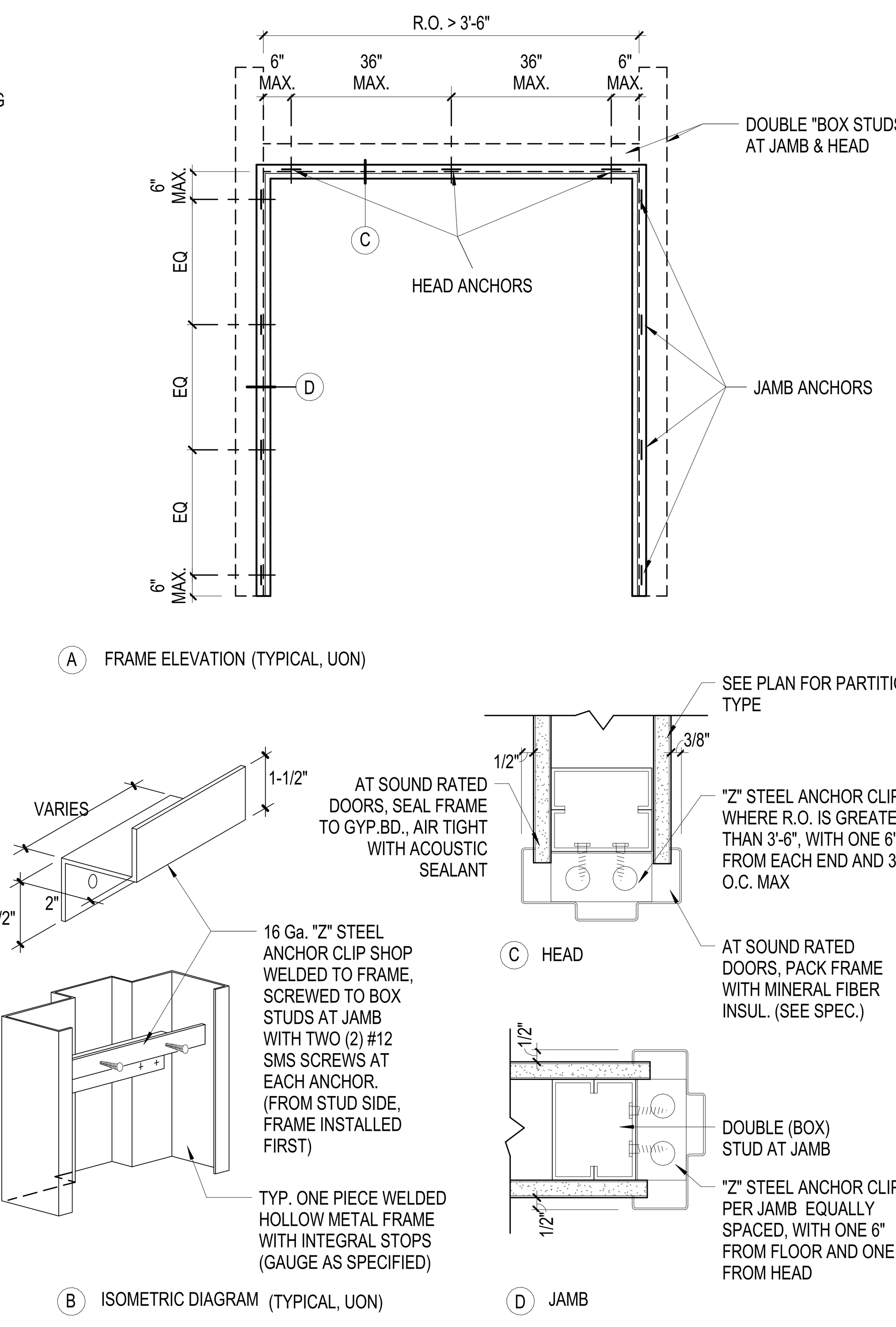

F4 **FRAME ATACHMENT**
SCALE: 3" = 1'-0"

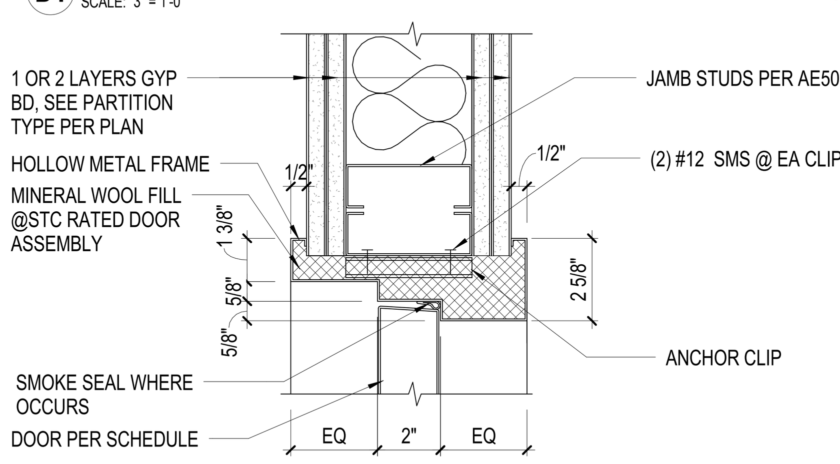

E1 **TYP. INT. DOOR JAMB (DOUBLE EGRESS DOOR)**
SCALE: 3" = 1'-0"

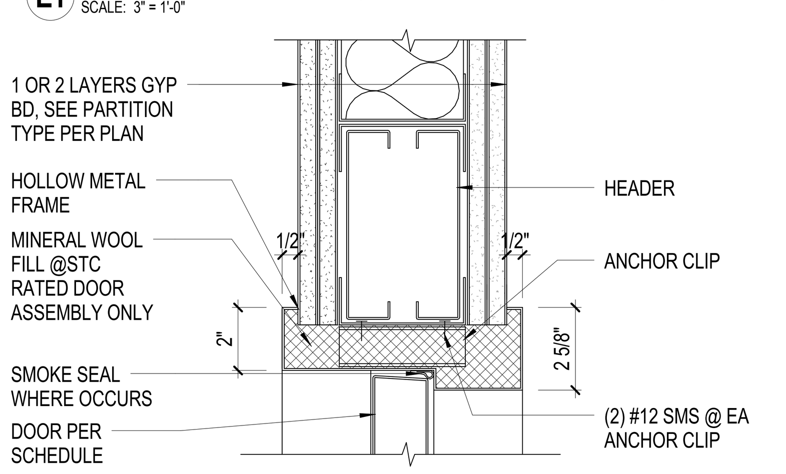

F1 **TYP. INT. DOOR HEAD (DOUBLE EGRESS DOOR)**
SCALE: 3" = 1'-0"

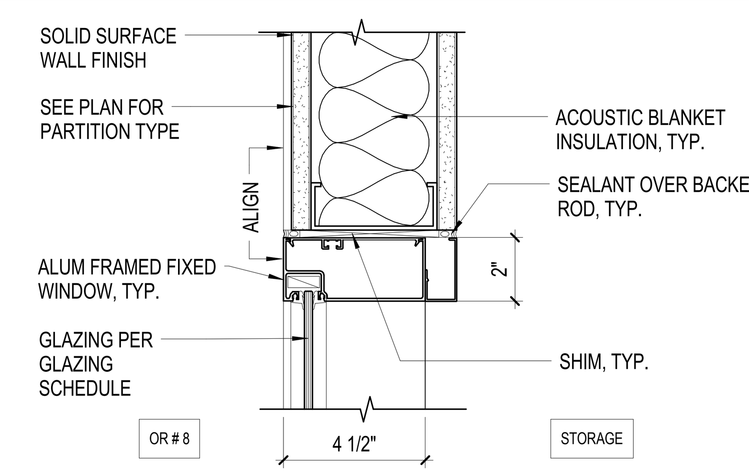

E6 **INTERIOR WINDOW HEAD**
SCALE: 3" = 1'-0"

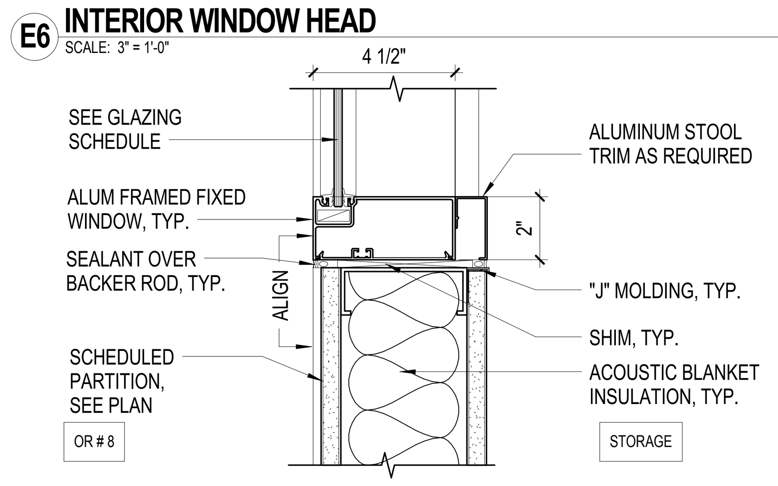

F6 **WINDOW SILL SECTION**
SCALE: 3" = 1'-0"

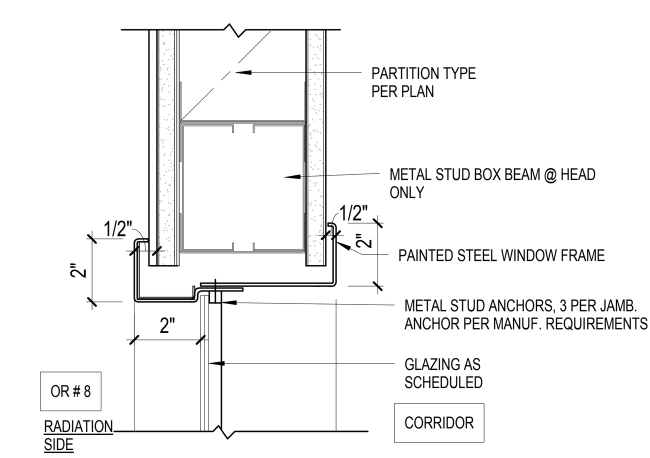

F7 **INT. WINDOW JAMB/HEAD DETAIL**
SCALE: 3" = 1'-0"

SHEET NOTES

1. ALL DOORS ARE 1-3/4" THICK, U.O. N.
2. REFER TO SPECIFICATIONS FOR DOOR HARDWARE GROUP.
3. EXIT DOORS SHALL BE OPENABLE FROM THE INSIDE WITHOUT THE USE OF KEY, SPECIAL KNOWLEDGE OR EFFORT.

DOOR CODES AND KEY

VA STANDARD DOOR MODIFICATION CODE

A	LAMINATED GLASS
AD	AUTOMATIC DOOR OPENER (SWING OR SLIDE)
AL	AUDIBLE ALARM (ON EGRESS)
CL	STAND ALONE CARD READER LOCK
CR	CARD READER
D	DOUBLE GLAZED TEMPERED GLASS
DA	DOOR OPERATOR (WAVE ACTIVATED)
DE	DELAYED EGRESS
H	ELECTRIC HOLD OPEN
IC	INTERCOM
ID	INTEGRATED DOOR ASSEMBLY
IL	INTERLOCKED
L	LOUVER
LL	LEAD-LINED DOORS
LP	LIGHT PROOF LOUVER
M	MECHANICAL SEAL FOR LIGHT PROOF AND SOUND RETARDING DOOR
P	PANIC HARDWARE
PB	STAND-ALONE PUSH BUTTON LOCK
PS	DOOR POSITION SWITCH (DOOR CONTACT)
RF	RADIO FREQUENCY SHIELDED DOOR
RR	REMOTE RELEASE BUTTON
STC	ACOUSTIC DOOR ASSEMBLY (INDICATE STC RATING NUMBER)
T	TEMPERED GLASS
TL	TIMER LOCK (ELECTRIC LOCK/ UNLOCK OF DOOR USING ELECTRIC TIMER
U	UNDERCUT 1"
V	LEAD GLASS
W	WIRED GLASS

DOOR/ WINDOW MATERIALS

AL	ALUMINUM
GL-1	LAMINATED GLASS (9mm THICK); LEAD LINED
GL-2	SWITCHABLE TEMPERED GLASS (4mm THICK); LEAD LINED
GL-3	TEMPERED GLASS (4mm THICK)
HM	HOLLOW METAL
SCW	SOLID CORE WOOD
STL	STEEL

FRAME MATERIALS

HM	HOLLOW METAL

DOOR + FRAME (GENERIC) FINISH

P-1	PAINT (INDICATE TYPE CODE)
P-2	PAINT (INDICATE TYPE CODE)
S-1	STAIN (INDICATE TYPE CODE)
S-1	STAIN (INDICATE TYPE CODE)
IRP	IMPACT RESISTANT PANEL

DOOR LABEL KEY

A LABEL: 3 HOUR RATING (FOR 4 HOUR WALL)
B LABEL: 1 1/2 HOUR RATING (FOR 2 HOUR WALL)
C LABEL: 3/4 HOUR RATING (FOR 1 HOUR WALL)
D LABEL: 1 1/2 HOUR RATED (FOR 2 HOUR EXTERIOR WALL)
E LABEL: 3/4 HOUR RATED (FOR 1 HOUR EXTERIOR WALL)

CONSTRUCTION DOCUMENTS
FULLY SPRINKLERED

No.	Description	Date
1	SCHEMATIC DESIGN (SD)	10/20/2015
2	DESIGN DEVELOPMENT (DD)	01/18/2016
3	CONSTRUCTION DOCUMENTS (CD)	03/30/2016

CONSULTANTS:
(SEE PROJECT TEAM DIRECTORY ON GI000 COVER SHEET)

Seals and Signatures

ARCHITECTS/ENGINEERS:

LEO A DALY
PLANNING ARCHITECTURE ENGINEERING INTERIORS
550 South Hope Street, 27th Floor
Los Angeles, California 90071, USA
213-629-0100 F213-629-0070
EST. 1915

Drawing Title: **DOOR, FRAME, WINDOW TYPES AND DOOR HARDWARE SCHEDULE**
Approved: Project Director

Project Title: **CONSTRUCT OPERATING ROOM #8**
Location: 11201 BENTON STREET, LOMA LINDA, CA 92357
Date: 03/30/2016 | Checked: MS | Drawn: TV

Project Number: 605-14-640
Building Number: 1
Drawing Number: **AE601**

Office of Construction and Facilities Management
Department of Veterans Affairs

VA FORM 08-6231

3/25/2016 5:51:17 PM C:\Users\mbsaquilayan\Documents\Autodesk\Revit 2013 Projects\046-10037-000_Central_mbsaquilayan.rvt

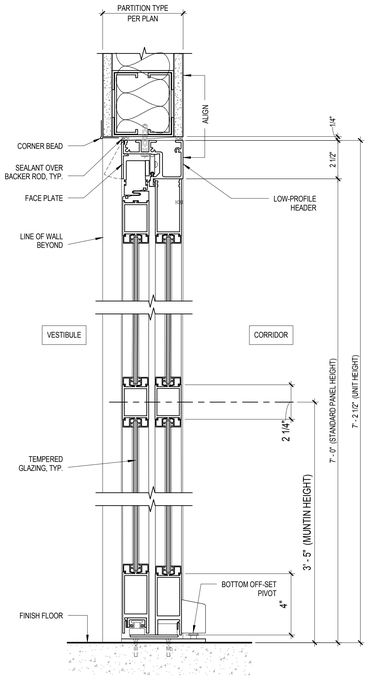

D1 BREAKAWAY DOOR HEAD AND SILL
SCALE: 3" = 1'-0"

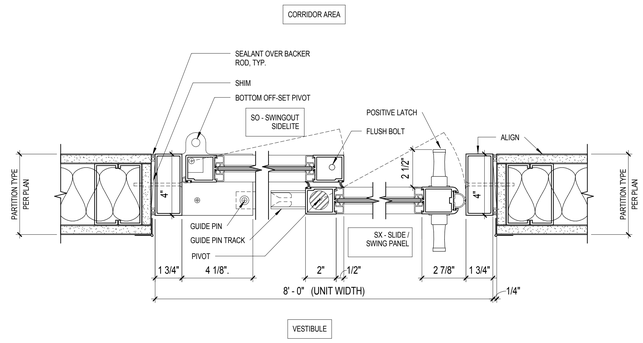

B3 SLIDING DOOR WITH BREAKAWAY JAMB
SCALE: 3" = 1'-0"

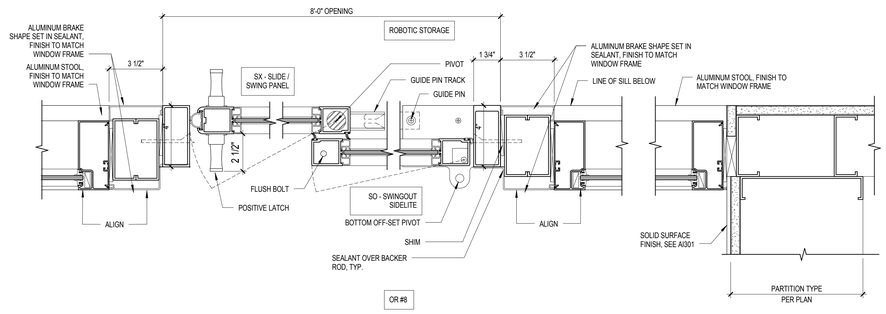

D3 BREAKAWAY SLIDING DOOR & WINDOW JAMB
SCALE: 3" = 1'-0"

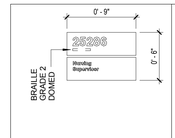 SEE DETAIL A1-2 FOR MOUNTING	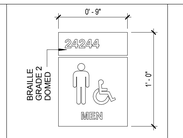 SEE DETAIL A1-3 FOR MOUNTING	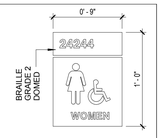 SEE DETAIL A1-3 FOR MOUNTING
IN-04.02A SECONDARY ROOM IDENTIFICATION	IN-09.01 RESTROOM IDENTIFICATION	IN-09.02 RESTROOM IDENTIFICATION

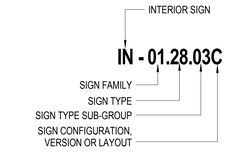

V.A. INTERIOR SIGNAGE DESIGNATION KEY

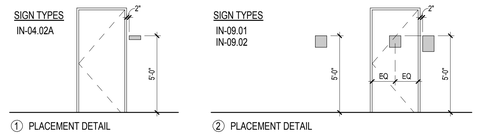

① PLACEMENT DETAIL ② PLACEMENT DETAIL

B6 INTERIOR SIGNAGE MOUNTING
SCALE: 1/4" = 1'-0"

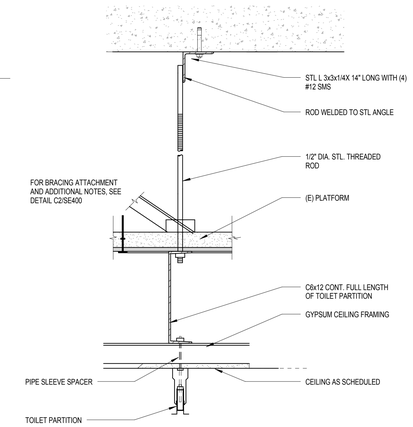

D8 TOILET PARTITION
SCALE: 1 1/2" = 1'-0"

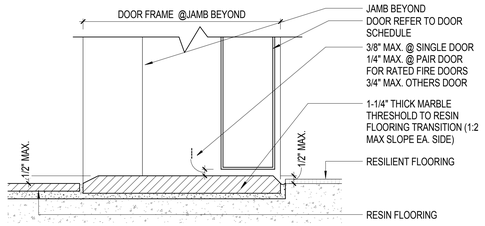

D6 TYP. RESILIENT/ RESIN FLOOR DOOR SILL
SCALE: 3" = 1'-0"

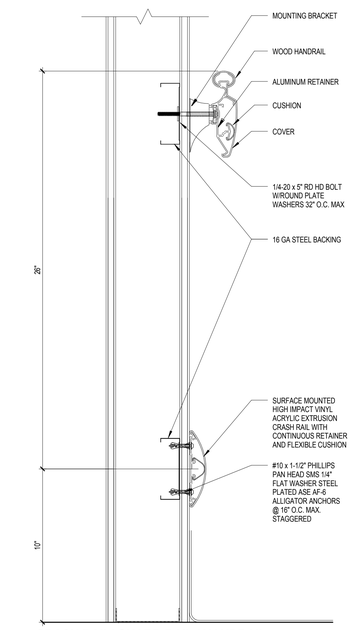

F2 CRASH RAIL/ GUARD RAIL / HANDRAIL
SCALE: 3" = 1'-0"

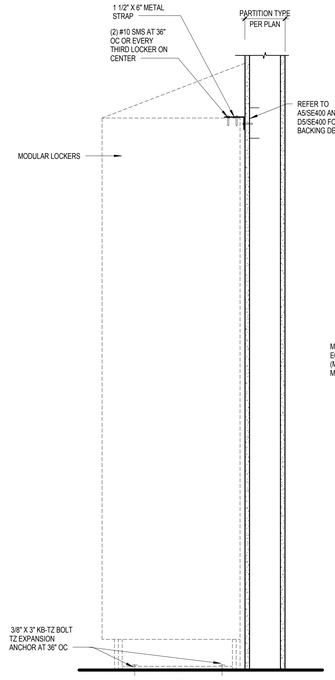

F4 LOCKER ANCHORAGE
SCALE: 1 1/2" = 1'-0"

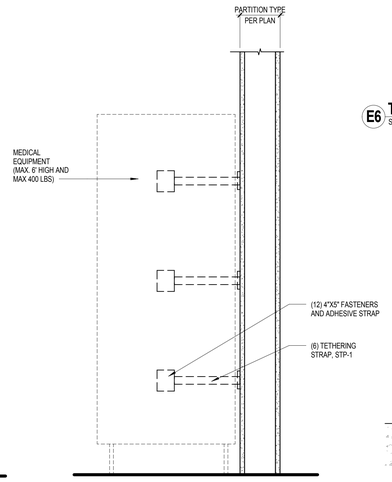

F5 EQUIPMENT TETHERING
SCALE: 1 1/2" = 1'-0"

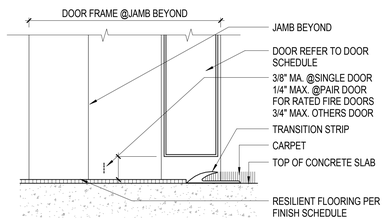

E6 TYP. CARPET / RESILIENT FLOOR DOOR SILL
SCALE: 3" = 1'-0"

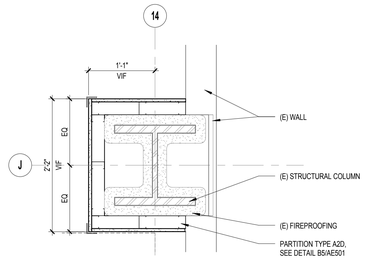

E8 COLUMN FURRING AT GRID LINE 14 & J
SCALE: 1" = 1'-0"

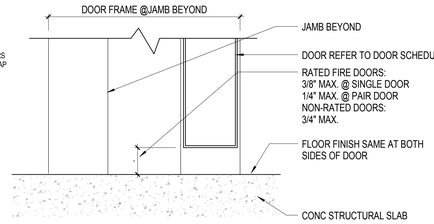

F6 TYPICAL LIKE TO LIKE FINISH INT. DOOR SILL
SCALE: 3" = 1'-0"

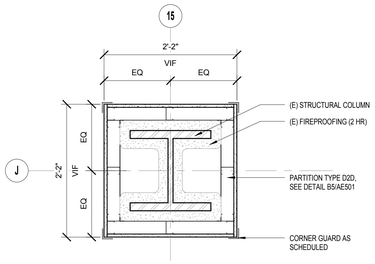

F8 COLUMN FURRING DTL AT GRID LINE 15 & J
SCALE: 1" = 1'-0"

CONSTRUCTION DOCUMENTS
FULLY SPRINKLERED

No.	Description	Date
1	SCHEMATIC DESIGN (SD)	10/20/2015
2	DESIGN DEVELOPMENT (DD)	01/18/2016
3	CONSTRUCTION DOCUMENTS (CD)	03/30/2016

CONSULTANTS:
(SEE PROJECT TEAM DIRECTORY ON GI000 COVER SHEET)

Seals and Signatures

ARCHITECTS/ENGINEERS:
LEO A DALY
PLANNING ARCHITECTURE ENGINEERING INTERIORS
550 South Hope Street, 27th Floor
Los Angeles, California 90071, USA
213-629-0100 F213-629-0070
EST. 1915

Drawing Title: **SIGNAGE AND MISC. DETAILS**
Approved: Project Director
Project Title: **CONSTRUCT OPERATING ROOM #8**
Location: 11201 BENTON STREET LOMA LINDA, CA 92357
Date: 03/30/2016 | Checked: MS | Drawn: TV
Project Number: 605-14-640
Building Number: 1
Drawing Number: **AE610**

Office of Construction and Facilities Management
Department of Veterans Affairs

VA FORM 08-6231

3/23/2016 3:27:10 PM C:\Users\mbsaguilayan\Documents\Autodesk\Revit 2013 Projects\046-18057-000_Central_mbsaguilayan.rvt

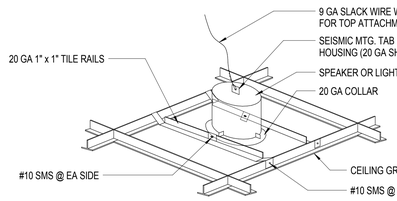

A1 LIGHT FIXTURES (0-10 LBS) MOUNTING
SCALE: 1 1/2" = 1'-0"

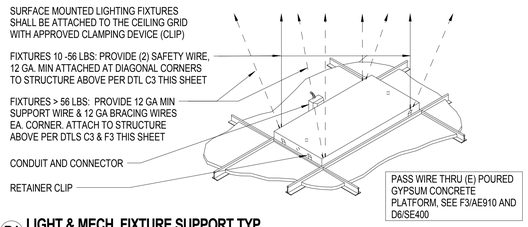

B1 LIGHT & MECH. FIXTURE SUPPORT TYP.
SCALE: 3" = 1'-0"

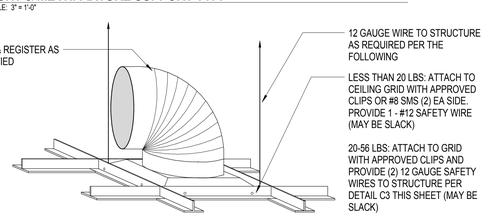

C1 MECHANICAL REGISTER MOUNTING DETAIL
SCALE: 1 1/2" = 1'-0"

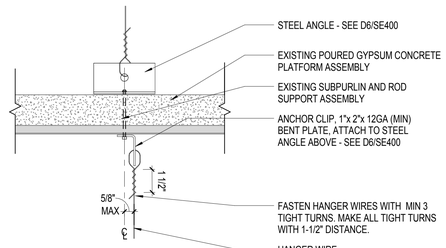

(A) AT POURED GYPSUM CONCRETE PLATFORM

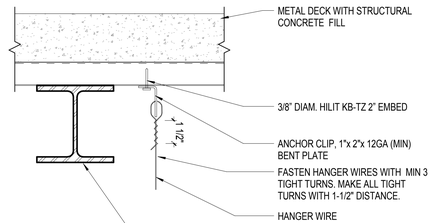

(B) AT STEEL BEAMS

C3 TYPICAL VERTICAL HANGER WIRE ATTACHMENT
SCALE: 3" = 1'-0"

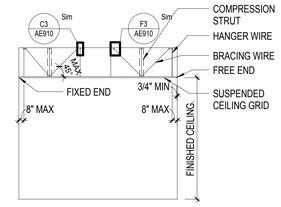

A5 SUSP ACT - SEISMIC BRACING SECTION
SCALE: NTS

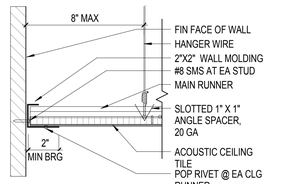

B5 SUSP ACT - FIXED JOINT AT WALL
SCALE: 3" = 1'-0"

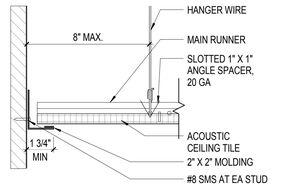

C5 SUSP ACT - SLIP JOINT AT WALL
SCALE: 3" = 1'-0"

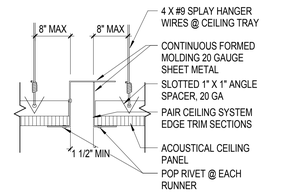

D5 SUSP ACT - SEISMIC / CONTROL JOINT
SCALE: 3" = 1'-0"

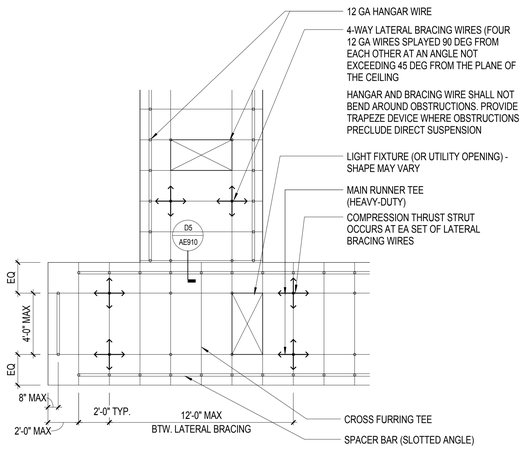

(A) CORRIDORS AND SPACES UP TO 8'-0"

DIMENSIONS SHOWN ARE MEASURED TO CENTERLINE OF RUNNER CHANNELS AND BRIDGING, TYP.

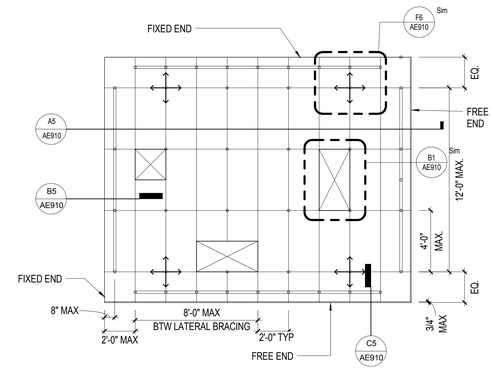

*NOTE: 8' 0" FOR ESSENTIAL SERVICES BUILDINGS ; 12'-0" FOR ALL OTHER BUILDINGS

(B) CORRIDORS AND ROOMS GREATER THAN 8'-0" WIDE

D6 SUSP ACT - DIAGRAMMATIC CEILING FRAMING KEY PLAN
SCALE: 1/4" = 1'-0"

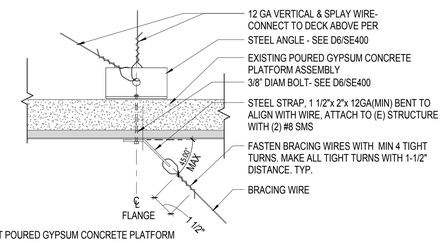

(A) AT POURED GYPSUM CONCRETE PLATFORM

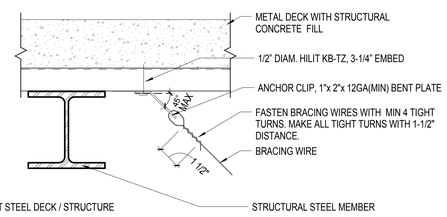

(B) AT STEEL DECK / STRUCTURE

F3 TYPICAL BRACING WIRE ATTACHMENT
SCALE: 3" = 1'-0"

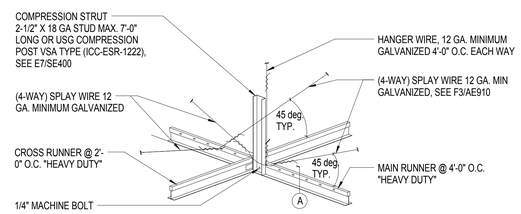

COMPRESSION STRUT SIZE TABLE:

LIMITING HEIGHT	STRUT SIZE
7' - 0 "	2 1/2" x 1 1/4" 20 GA
10' - 0"	4" 1 5/8" 20 GA
21' - 6"	4" x 2" 20 GA

NOTES:
1. MAX SLENDERNESS RATIO (K/r) OF 200. OTHER COMPRESSION STRUT SECTIONS MAY BE SUBMITTED WITH SUPPORTING CALCULTALIONS.
2. SCHEDULES COMPRESSION STRUTS BASED ON STEEL STUD MANUFACTURER'S ASSOCITATION STANDARDS WITH STEEL STRENGHT OF 33KSI
3. PREFABRICATED COMPRESSION MAY BE USED AS AN ALTERNATIVE: USG DOWN COMPRESSION POST TYPE VSA (ICC-ESR-1222) OR APPROVED EQUAL W ICC REPORT NUMBER

STEEL SECTION WITH I/R RATIO OF 200 MAXIMUM ATTACH TO MAIN RUNNERS WITHIN 2" OF CROSS RUNNER WITH (2) #12 SELF-DRILLING SELF TAPPING (SDSL) SCREWS AND TO STRUCTURE WITH (2) #12 SCREWS OR 3/8"Ø EXPANSION ANCHOR (2" MIN EMBED) AT CONCRETE. STEEL COMPRESSION STRUT SHALL NOT REPLACE HANGER WIRE.

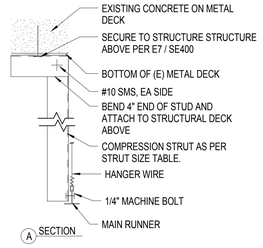

F6 SUSP ACT - COMPRESSION STRUT
SCALE: 3" = 1'-0"

SHEET NOTES

1. GENERAL REQUIREMENTS: THE FOLLOWING REQUIREMENTS AND DETAILS ON THIS SHEET DING CEILING MOUNTED AIR TERMINALS, SERVICES AND LIGHT FIXTURES, DOES NOT EXCEED FOUR (4) PSF.

1.1 THE CEILING GRID SYSTEM MUST BE RATED AS HEAVY DUTY AS DEFINED BY ASTM C635. #12 GAGE WIRE SHALL BE 0.106 INCHES IN DIAMETER CONFORMING TO ASTM A641. #12 GAGE WIRE SHALL BE SOFT ANNEALED, GALVANIZED STEEL WIRE WITH A CLASS 1 COATING.

1.2 #12 GAGE HANGER WIRES MAY BE USED FOR UP TO AND INCLUDING 4 FT. BY 4 FT. GRID SPACING AND SHALL BE ATTACHED TO MAIN RUNNERS.

1.3 PROVIDE #12 GAGE HANGER WIRES AT THE ENDS OF ALL MAIN AND CROSS RUNNERS WITHIN EIGHT (8) INCHES OF THE SUPPORT OR WITHIN ONE-FOURTH (1/4) OF THE LENGTH OF THE END TEE, WHICHEVER IS LEAST, FOR THE PERIMETER OF THE CEILING AREA. SEE FIGURE 2. PERIMETER WIRES ARE NOT REQUIRED WHEN THE LENGTH OF THE END TEE IS EIGHT (8) INCHES OR LESS.

1.4 PROVIDE TRAPEZE OR OTHER SUPPLEMENTARY SUPPORT MEMBERS AT OBSTRUCTIONS TO TYPICAL HANGER SPACING. SEE FIGURE 3A, DETAIL F. PROVIDE ADDITIONAL HANGERS, STRUTS OR BRACES AS REQUIRED AT ALL CEILING BREAKS, SOFFITS, OR DISCONTINUOUS AREAS. HANGER WIRES THAT ARE MORE THAN 1 (HORIZONTAL) IN 6 (VERTICAL) OUT OF PLUMB ARE TO HAVE COUNTER-SLOPING WIRES.

1.5 CEILING GRID MEMBERS SHALL BE ATTACHED TO TWO (2) ADJACENT WALLS PER ASCE 7-05, SECTION 13.5.6.2(B). CEILING GRID MEMBERS SHALL BE AT LEAST 3/4 INCH CLEAR OF OTHER WALLS. IF WALLS RUN DIAGONALLY TO CEILING GRID SYSTEM RUNNERS, ONE END OF MAIN AND CROSS RUNNERS SHOULD BE FREE, AND A MINIMUM OF 3/4 INCH CLEAR OF WALL.

1.6 THE WIDTH OF THE PERIMETER SUPPORTING CLOSURE ANGLE SHALL BE NOT LESS THAN 2 INCHES.
1.7 AT THE PERIMETER OF THE CEILING AREA WHERE MAIN OR CROSS RUNNERS ARE NOT CONNECTED TO THE ADJACENT WALL, PROVIDE INTERCONNECTION BETWEEN THE RUNNERS AT THE FREE END TO PREVENT LATERAL SPREADING. A METAL STRUT OR A #16 GAGE WIRE WITH A POSITIVE MECHANICAL CONNECTION TO THE RUNNER MAY BE USED. WHERE THE PERPENDICULAR DISTANCE FROM THE WALL TO THE FIRST PARALLEL RUNNER IS 12 INCHES OR LESS, THIS INTERLOCK IS NOT REQUIRED.

1.8 EXPANSION JOINTS SHALL BE PROVIDED IN THE CEILING AT INTERSECTIONS OF CORRIDORS AND AT JUNCTIONS OF CORRIDORS WITH LOBBIES OR OTHER SIMILAR AREAS. SEE DETAIL D5 THIS SHEET.

1.9 PROVIDE LATERAL-FORCE BRACING ASSEMBLIES CONSISTING OF A COMPRESSION STRUT AND FOUR (4) #12 GAGE SPLAYED BRACING WIRES ORIENTED 90 DEGREES FROM EACH OTHER. SEE DETAIL F6 THIS SHEET.

1.10 PROVIDE BRACING ASSEMBLIES AT LOCATIONS NOT MORE THAN ONE HALF (1/2) THE CALCULATED SPACING IN EACH DIRECTION FROM EACH PERIMETER WALL AND AT THE EDGES OF ANY CHANGE IN ELEVATION OF THE CEILING.

· BRACING ASSEMBLIES SPACED AT A MAXIMUM OF 12 FEET BY 12 FEET ON CENTERS FOR SCHOOL BUILDINGS AND 8 FEET BY 12 FEET ON CENTERS FOR ESSENTIAL SERVICES BUILDINGS, AND
· THE MAXIMUM SLENDERNESS RATIO (KL/R) OF THE COMPRESSION STRUT IS 200 OR LESS.

1.11 THE SLOPE OF BRACING WIRES SHALL NOT EXCEED 45 DEGREES FROM THE PLANE OF THE CEILING AND WIRES SHALL BE TAUT. SPLICES IN WIRES ARE NOT PERMITTED.

1.12 COMPRESSION STRUTS SHALL NOT BE MORE THAN 1 (HORIZONTAL) IN 6 (VERTICAL) OUT OF PLUMB.

1.13 SUSPENDED ACOUSTICAL CEILING SYSTEMS WITH A CEILING AREA OF 144 SQUARE FEET OR LESS, AND FIRE RATED SUSPENDED ACOUSTICAL CEILING SYSTEMS WITH A CEILING AREA OF 96 SQUARE FEET OR LESS, SURROUNDED BY WALLS WHICH CONNECT DIRECTLY TO THE STRUCTURE ABOVE OR WALLS INDEPENDENTLY BRACED ABOVE CEILING TO STRUCTURE ABOVE, DO NOT REQUIRE BRACING ASSEMBLIES WHEN ATTACHED TO TWO ADJACENT WALLS.

1.14 FOR CEILING AREAS EXCEEDING 2500 SQUARE FEET A SEISMIC SEPARATION JOINT SHALL BE PROVIDED IN ACCORDANCE WITH DETAIL D5 THIS SHEET TO DIVIDE THE CEILING INTO AREAS NOT EXCEEDING 2500 SQUARE FEET. ALTERNATIVELY, STRUCTURAL ANALYSIS SHALL BE PERFORMED TO DEMONSTRATE COMPLIANCE WITH ASCE 7-05, SECTION 13.5.6.2.2(D).

1.15 PENETRATIONS THROUGH THE CEILING FOR SPRINKLER HEADS AND OTHER SIMILAR DEVICES THAT ARE NOT INTEGRALLY TIED TO THE CEILING SYSTEM IN THE LATERAL DIRECTION SHALL HAVE A TWO (2) INCH OVERSIZED RING, SLEEVE OR ADAPTER THROUGH THE CEILING TILE TO ALLOW FREE MOVEMENT OF ONE (1) INCH IN ALL HORIZONTAL DIRECTIONS. ALTERNATIVELY, SWING JOINTS MAY BE PROVIDED PER ASCE 7-05, SECTION 13.5.6.2.2(E).
DETAIL -----, IS REQUIRED WHERE THE PENDANT HANGER PENETRATES THE CEILING. SPECIAL DETAILS ARE REQUIRED TO ATTACH THE PENDANT HANGER TO THE BRACING ASSEMBLY TO TRANSMIT HORIZONTAL FORCE. IF THE PENDANT MOUNTED LIGHT FIXTURE IS DIRECTLY AND INDEPENDENTLY BRACED BELOW THE CEILING, I.E. AIRCRAFT CABLES TO WALLS, THEN BRACE ASSEMBLY IS NOT REQUIRED ABOVE THE CEILING. SEE IR 16-9 FOR ADDITIONAL REQUIREMENT FOR PENDENT MOUNTED FIXTURES.

1.16 FASTEN #12 HANGER WIRES WITH NOT LESS THAN THREE (3) TIGHT TURNS. FASTEN #10 OR #12 BRACING WIRES WITH FOUR (4) TIGHT TURNS. MAKE ALL TIGHT TURNS WITHIN A DISTANCE OF 1-1/2 INCHES. HANGER OR BRACING WIRE ANCHORS TO THE STRUCTURE SHOULD BE INSTALLED IN SUCH A MANNER THAT THE DIRECTION OF THE ANCHOR ALIGNS AS CLOSELY AS POSSIBLE WITH THE DIRECTION OF THE WIRE.
NOTE: WIRE TURNS MADE BY MACHINE WHERE BOTH STRANDS HAVE BEEN DEFORMED OR BENT IN WRAPPING CAN WAIVE THE 1-1/2 INCH REQUIREMENT, BUT THE NUMBER OF TURNS SHOULD BE MAINTAINED, AND BE AS TIGHT AS POSSIBLE.

1.17 SEPARATE ALL CEILING HANGER AND BRACING WIRES AT LEAST SIX (6) INCHES FROM ALL UNBRACED DUCTS, PIPES, CONDUIT, ETC.

1.18 WHEN DRILLED-IN CONCRETE ANCHORS OR SHOT-IN ANCHORS ARE USED IN REINFORCED CONCRETE FOR HANGER WIRES, 1 OUT OF 10 WIRE/ANCHOR ASSEMBLIES MUST BE FIELD TESTED FOR 200 LBS. IN TENSION. WHEN DRILLED-IN CONCRETE ANCHORS ARE USED FOR BRACING WIRES, 1 OUT OF 2 WIRE/ANCHOR ASSEMBLIES MUST BE FIELD TESTED FOR 440 LBS. IN TENSION IN THE DIRECTION OF THE WIRE. SHOT-IN ANCHORS IN CONCRETE ARE NOT PERMITTED FOR BRACING WIRES.

NOTE: DRILLED-IN OR SHOT-IN ANCHORS REQUIRE ENGINEER APPROVAL PRIOR TO USE IN PRESTRESSED CONCRETE.

1.19 ATTACH ALL LIGHT FIXTURES AND CEILING MOUNTED AIR TERMINALS, TO THE CEILING GRID RUNNERS TO RESIST A HORIZONTAL FORCE EQUAL TO THE WEIGHT OF THE FIXTURES. SCREWS OR APPROVED FASTENERS ARE REQUIRED.

1.20 FLUSH OR RECESSED LIGHT FIXTURES, WEIGHING LESS THAN 56 LBS. AND MECHANICAL TERMINALS AND SERVICES, WEIGHING LESS THAN 20 LBS., MAY BE SUPPORTED DIRECTLY ON THE RUNNERS OF A HEAVY DUTY GRID SYSTEM BUT, IN ADDITION, THEY MUST HAVE A MINIMUM OF TWO (2) #12 GAGE SLACK SAFETY WIRES ATTACHED TO THE FIXTURE AT DIAGONAL CORNERS AND ANCHORED TO THE STRUCTURE ABOVE. ALL 4 FT. X 4 FT. LIGHT FIXTURES MUST HAVE SLACK SAFETY WIRES AT EACH CORNER.

ALL FLUSH OR RECESSED LIGHT FIXTURES WEIGHING 56 LBS. OR MORE AND MECHANICAL TERMINALS AND SERVICES, WEIGHING 20 LBS. OR MORE, MUST BE INDEPENDENTLY SUPPORTED BY NOT LESS THAN FOUR (4) TAUT #12 GAGE WIRES, EACH ATTACHED TO THE FIXTURE AND TO THE STRUCTURE ABOVE.

THE FOUR (4) TAUT #12 GAGE WIRES, INCLUDING THEIR ATTACHMENT TO THE STRUCTURE ABOVE, MUST BE CAPABLE OF SUPPORTING FOUR (4) TIMES THE WEIGHT OF THE UNIT.

1.21 SUPPORT SURFACE MOUNTED LIGHT FIXTURES BY AT LEAST TWO POSITIVE DEVICES WHICH SURROUND THE CEILING RUNNER AND WHICH ARE EACH SUPPORTED FROM THE STRUCTURE ABOVE BY A #12 GAGE WIRE. SPRING CLIPS OR CLAMPS THAT CONNECT ONLY TO THE RUNNER ARE NOT ACCEPTABLE.

PROVIDE ADDITIONAL SUPPORTS WHEN LIGHT FIXTURES ARE 8 FT. OR LONGER. MAXIMUM SPACING BETWEEN SUPPORTS SHALL NOT EXCEED 8 FEET.

CONSTRUCTION DOCUMENTS
FULLY SPRINKLERED

No.	Description	Date
1	SCHEMATIC DESIGN (SD)	10/20/2015
2	DESIGN DEVELOPMENT (DD)	01/18/2016
3	CONSTRUCTION DOCUMENTS (CD)	03/30/2016

CONSULTANTS:
(SEE PROJECT TEAM DIRECTORY ON GI000 COVER SHEET)

Seals and Signatures
LICENSED ARCHITECT MICHELLE B SAQUILAYAN C 32660 EXP. 10-31-2016 STATE OF CALIFORNIA

ARCHITECTS/ENGINEERS:
LEO A DALY
550 South Hope Street, 27th Floor
Los Angeles, California 90071, USA
213-629-0100 F213-629-0070
PLANNING ARCHITECTURE ENGINEERING INTERIORS
EST. 1915

Drawing Title: **ACOUSTICAL CEILING DETAILS**
Approved: Project Director

Project Title: **CONSTRUCT OPERATING ROOM #8**
Location: 11201 BENTON STREET LOMA LINDA, CA 92357
Date: 03/30/2016 | Checked: MS | Drawn: TV

Project Number: 605-14-640
Building Number: 1
Drawing Number: **AE910**

Office of Construction and Facilities Management
Department of Veterans Affairs

VA FORM 08-6231

3/25/2016 3:27:12 PM C:\Users\mbsaquilayan\Documents\Autodesk\Revit 2013 Projects\046-10037-000_Central_mbsaquilayan.rvt

SHEET NOTES

PURPOSE: THE PURPOSE OF THIS IR IS TO PROVIDE ADDITIONAL GUIDELINES FOR THE DESIGN AND CONSTRUCTION OF GYPSUM WALL BOARD SUSPENDED CEILING SYSTEMS.

1. MATERIALS: MATERIALS ARE TO COMPLY WITH APPLICABLE UBC STANDARDS. GYPSUM BOARD IS EITHER 1/2 INCH OR 5/8 INCH IN THICKNESS.

2. DESIGN: FOR LATERAL LOAD, REFER TO CBC,SECTION 1632A. THE WEIGHT OF THE SUSPENDED CEILING SHALL NOT BE LESS THAN FOUR (4) POUNDS PER SQUARE FOOT FOR DESIGN PURPOSES.

3. DETAILS OF CONSTRUCTION.

3.1 GENERAL: GYPBOARD CEILINGS SHOULD NOT SUPPORT BUILDING COMPONENTS OTHER THAN AIR CONDITIONING / HEATING GRILLS OR LIGHT FIXTURES. ALL SUCH COMPONENTS SHALL BE SUPPORTED EITHER DIRECTLY FROM MAIN RUNNERS, OR BY SUPPLEMENTAL FRAMING WHICH IS SUPPORTED BY MAIN RUNNERS. NO VERTICAL LOADS OTHER THAN GYPSUM BOARD DEAD LOAD SHALL BE APPLIED TO CROSS-FURRING.

3.2 VERTICAL SUPPORT SYSTEM.

3.2.1 THERE ARE MANY POSSIBLE VARIATIONS OF HANGER AND MAIN RUNNER SIZES AND SPACINGS LISTED IN CBC, TABLE NO. 25A-A, AND ALL OF THE COMBINATIONS ARE ACCEPTABLE. HOWEVER, THE MAIN RUNNERS THAT ARE MOST FREQUENTLY USED ARE 1-1/2 INCH COLD ROLLED CHANNELS, 0.475 LBS/FT. THIS IS ACCEPTABLE PROVIDED THE FOLLOWING REQUIREMENTS ARE MET:

1. VERTICAL HANGER WIRES ARE #9 GAGE AND GALVANIZED SOFT-ANNEALED STEEL.
2. CROSS-FURRING MAY BE 7/8 INCH, 25 GAGE GALVANIZED HAT SECTIONS AT 24 INCHES O.C. MAXIMUM. TO USE A MAIN RUNNER SPACING OF 4'-0" O.C. WITH A HANGER SPACING OF 4'-0" O.C., MAIN RUNNERS MUST BE 1-1/2 INCH HOT ROLLED CHANNELS WEIGHING 1.12 LBS/FT. ALSO, #8 GAGE GALVANIZED HANGER WIRES WOULD BE REQUIRED.

3.2.2 THE FOLLOWING REQUIREMENTS APPLY TO ALL WIRE HANGER/RUNNER COMBINATIONS:

1. HANGERS SHOULD BE SADDLE-TIED AROUND MAIN RUNNERS TO DEVELOP THE FULL STRENGTH OF THE HANGERS.
2. CROSS-FURRING SHOULD BE SADDLE-TIED TO THE MAIN RUNNERS WITH ONE STRAND OF #16 GAGE, OR TWO STRANDS OF #18 GAGE TIE WIRE.
3. MAIN RUNNERS SHOULD BE SPLICED BY LAPPING AND INTERLOCKING FLANGES 12 INCHES MINIMUM AND TYING NEAR EACH END WITH DOUBLE LOOPS OF #16 GAGE WIRE.
4. CROSS-FURRING SHOULD BE SPLICED BY LAPPING AND INTERLOCKING THE PIECES EIGHT (8) INCHES MINIMUM AND TYING NEAR EACH END WITH DOUBLE LOOPS OF #16 GAGE WIRE

3.2.3 FASTEN HANGER WIRES WITH NOT LESS THAN THREE (3) TIGHT TURNS. FASTEN BRACING WIRES WITH FOUR (4) TIGHT TURNS. MAKE ALL TIGHT TURNS WITHIN A DISTANCE OF 1-1/2 INCHES. HANGER OR BRACING WIRE ANCHORS TO THE STRUCTURE SHOULD BE INSTALLED IN SUCH A MANNER THAT THE DIRECTION OF THE ANCHOR ALIGNS AS CLOSELY AS POSSIBLE WITH THE DIRECTION OF THE WIRE.

NOTE: WIRE TURNS MADE BY MACHINE WHERE BOTH STRANDS HAVE BEEN DEFORMED OR BENT IN WRAPPING CAN WAIVE THE 1-1/2 INCH REQUIREMENT, BUT THE NUMBER OF TURNS SHOULD BE MAINTAINED, AND BE AS TIGHT AS POSSIBLE.

SEPARATE ALL CEILING HANGER AND BRACING WIRES AT LEAST SIX (6) INCHES FROM ALL UNBRACED DUCTS, PIPES, CONDUIT, ETC. WHEN DRILLED-IN CONCRETE ANCHORS OR SHOT-IN ANCHORS ARE USED IN REINFORCED CONCRETE FOR HANGER WIRES, 1 OUT OF 10 MUST BE FIELD TESTED FOR 200 LBS. IN TENSION. WHEN DRILLED-IN CONCRETE ANCHORS ARE USED FOR BRACING WIRES, 1 OUT OF 2 MUST BE FIELD TESTED FOR 440 LBS IN TENSION. SHOT-IN ANCHORS IN CONCRETE ARE NOT PERMITTED FOR BRACING WIRES. IF ANY SHOT-IN OR DRILLED-IN ANCHOR FAILS, SEE SECTION 1923A.3.5, TITLE 24.

NOTE: DRILLED-IN OR SHOT-IN ANCHORS REQUIRE SPECIAL DSA APPROVAL WHEN USED IN PRESTRESSED CONCRETE. PROVIDE TRAPEZE OR OTHER SUPPLEMENTARY SUPPORT MEMBERS AT OBSTRUCTIONS TO TYPICAL HANGER SPACING. PROVIDE ADDITIONAL HANGERS, STRUTS OR BRACES AS REQUIRED AT ALL CEILING BREAKS, SOFFITS OR DISCONTINUOUS AREAS. HANGER WIRES THAT ARE MORE THAN 1 IN 6 OUT OF PLUMB ARE TO HAVE COUNTER-SLOPING WIRES.

4. SUPPORT AND ANCHORAGE OF LIGHT FIXTURES AND MECHANICAL SERVICES.

4.1 ALL RECESSED OR DROP-IN LIGHT FIXTURES, AS WELL AS CEILING MOUNTED MECHANICAL AIR TERMINALS AND SERVICES, SHALL BE SUPPORTED DIRECTLY BY MAIN RUNNERS OR BY SUPPLEMENTAL FRAMING WHICH IS SUPPORTED BY MAIN RUNNERS AND POSITIVELY ATTACHED WITH SCREWS OR OTHER APPROVED CONNECTORS.

4.2 SURFACE MOUNTED FIXTURES SHALL BE ATTACHED TO A MAIN RUNNER WITH A POSITIVE CLAMPING DEVICE MADE OF MATERIAL WITH A MINIMUM OF 14 GAGE. ROTATIONAL SPRING CLAMPS DO NOT COMPLY.

5. LATERAL SYSTEM:

5.1 WIRE BRACE SYSTEM. PROVIDE BRACING ASSEMBLIES, PER FIGURE 1 OF IR 25-2, AS DETERMINED BY CALCULATIONS, WITH THE FOLLOWING LIMITATIONS:

1. FOR SCHOOL BUILDINGS, PLACE BRACING ASSEMBLIES AT A SPACING NOT MORE THAN 12 FT. BY 12 FT. ON CENTER.
2. FOR ESSENTIAL SERVICES BUILDINGS, PLACE BRACING ASSEMBLIES NOT MORE THAN 8 FT. BY 12 FT. ON CENTER.
3. PROVIDE BRACING ASSEMBLIES AT NOT MORE THAN SIX (6) FEET FROM EACH PERIMETER WALL AND AT THE EDGE OF VERTICAL CEILING OFFSETS. THE SLOPE OF RACING WIRES SHALL NOT EXCEED 45 DEGREES FROM THE PLANE OF THE CEILING AND SHALL BE TAUT. SPLICES IN BRACING WIRES ARE NOT TO BE PERMITTED WITHOUT APPROVAL.
4. CEILING GRID MEMBERS MAY BE ATTACHED TO NOT MORE THAN TWO (2) ADJACENT WALLS. CEILING GRID MEMBERS SHALL BE AT LEAST 1/2 INCH FREE OF OTHER WALLS. IF WALLS RUN DIAGONALLY TO CEILING GRID SYSTEM RUNNERS, ONE END OF MAIN AND CROSS RUNNERS SHOULD BE FREE, AND A MINIMUM OF 1/2 INCH CLEAR OF WALL.
5. SUSPENDED CEILING SYSTEMS WITH AN AREA OF 144 SQUARE FEET OR LESS, AND FIRE RATED CEILING SYSTEMS WITH AN AREA OF 96 SQUARE FEET OR LESS, SURROUNDED BY WALLS WHICH CONNECT DIRECTLY TO THE STRUCTURE ABOVE, DO NOT REQUIRE BRACING ASSEMBLIES WHEN ATTACHED TO AT LEAST TWO ADJACENT WALLS.

5.2 ALTERNATE SYSTEM: DESIGN AS A DIAPHRAGM, SIMILAR TO PLYWOOD DIAPHRAGM CONCEPT, SUBJECT TO ACCEPTANCE BY THE DSA REGIONAL OFFICE.

5.2.1 DIAPHRAGM RATIOS:

HORIZONTAL 2:1 MAXIMUM
VERTICAL 1:1 MAXIMUM

5.2.2 A MAXIMUM DIAPHRAGM SHEAR EQUAL TO 50 LBS./FT. IS ALLOWED WITH 1 INCH OR 1-1/4 INCH HI-LO TYPE S, OR S-12, BUGLE HEAD SCREWS AT 12 INCHES O.C. AT ALL GYPSUM BOARD EDGES (3/8 INCH SCREW EDGE DISTANCE) AND AT ALL INTERMEDIATE SUPPORTS. A WALL CONSTRUCTED SIMILARLY CAN RESIST THE SAME SHEAR FORCE PROVIDED THE GYPSUM BOARD IS ON THE SAME SIDE OF THE STUDS AS THE CEILING IS, AND A POSITIVE CONNECTION BETWEEN THE CEILING AND THE WALL IS DETAILED. THE GYPSUM BOARD DIAPHRAGMS ARE TO RESIST LATERAL LOADS DUE TO THEIR OWN WEIGHT AND/OR THE CEILING DIAPHRAGM(S) ONLY.

5.2.3 DETAILS ARE REQUIRED PROVIDING FOR LATERAL LOAD TRANSFER FROM THE GYPSUM BOARD TO SHEAR WALLS, OR OTHER LATERAL LOAD RESISTING ELEMENTS, ON ALL FOUR SIDES OF THE DIAPHRAGM.

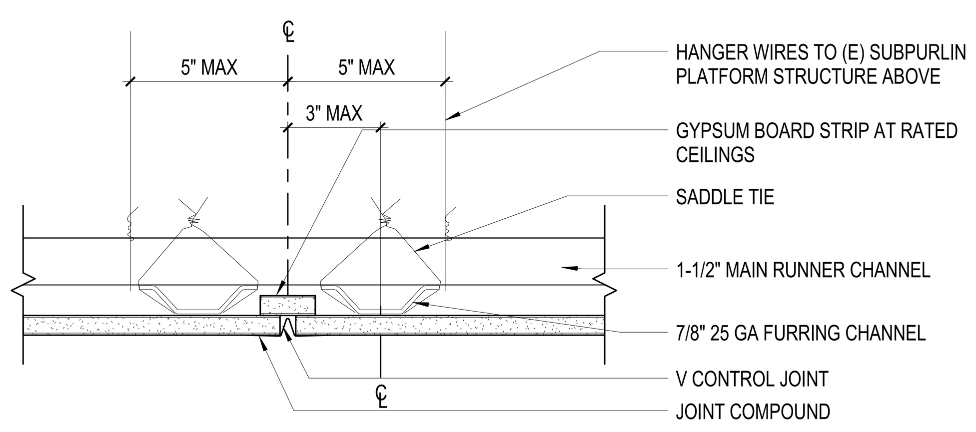

A2 TYP SUSP GYP - CONTROL JOINT
SCALE: 3" = 1'-0"

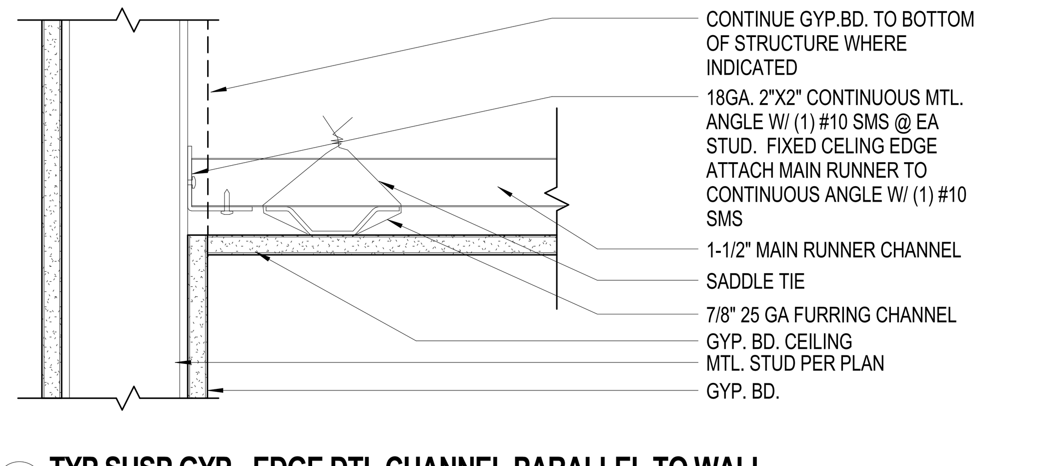

A4 TYP SUSP GYP - EDGE DTL CHANNEL PARALLEL TO WALL
SCALE: 3" = 1'-0"

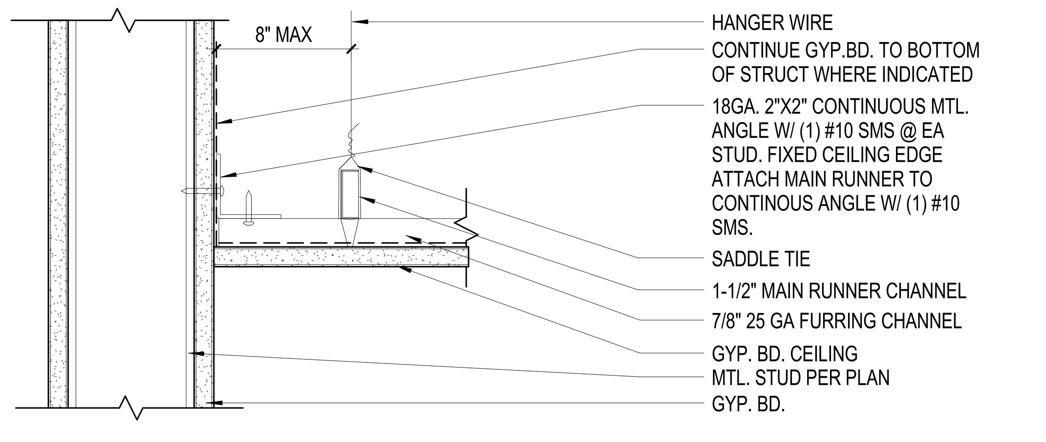

B4 TYP SUSP GYP - EDGE DTL CHANNEL PERPENDICULAR TO WALL
SCALE: 3" = 1'-0"

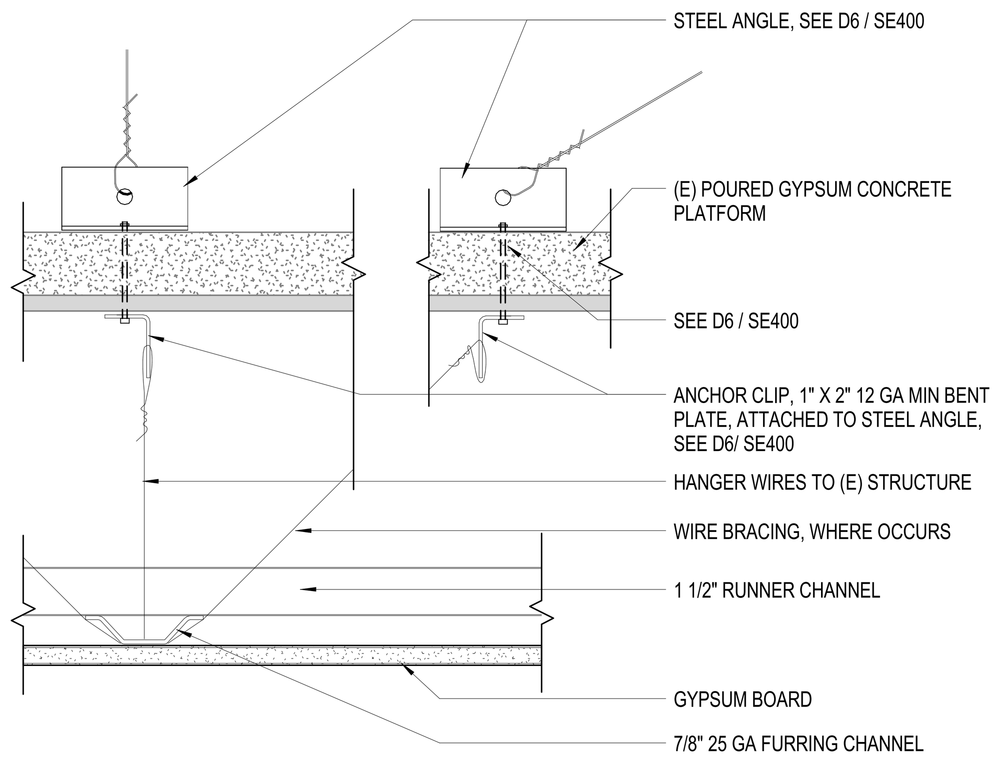

C2 TYP SUSP GYP - HANGER WIRE ATTACHMENT
SCALE: 3" = 1'-0"

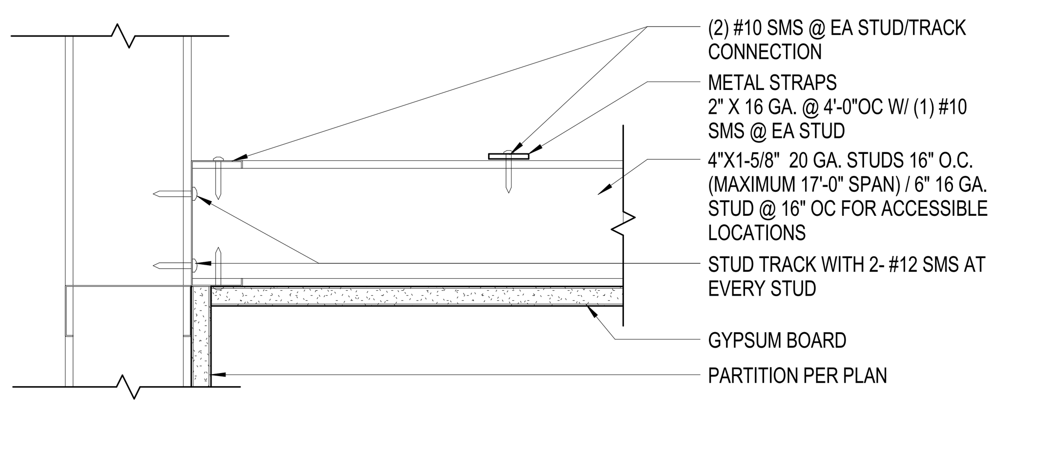

C4 JOISTED GYP CEILING (ALTERNATE) - EDGE DTL AT NON-RATED WALL
SCALE: 3" = 1'-0"

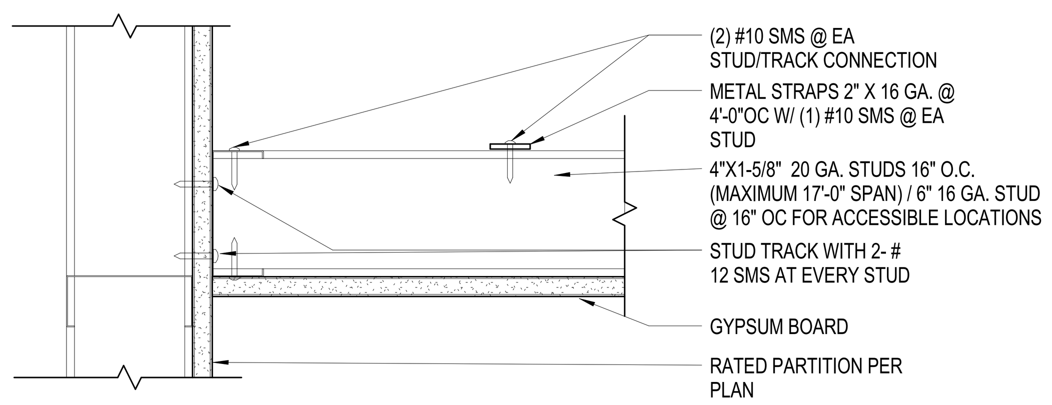

D4 JOISTED GYP CEILING (ALTERNATE)- EDGE DTL AT RATED WALL
SCALE: 3" = 1'-0"

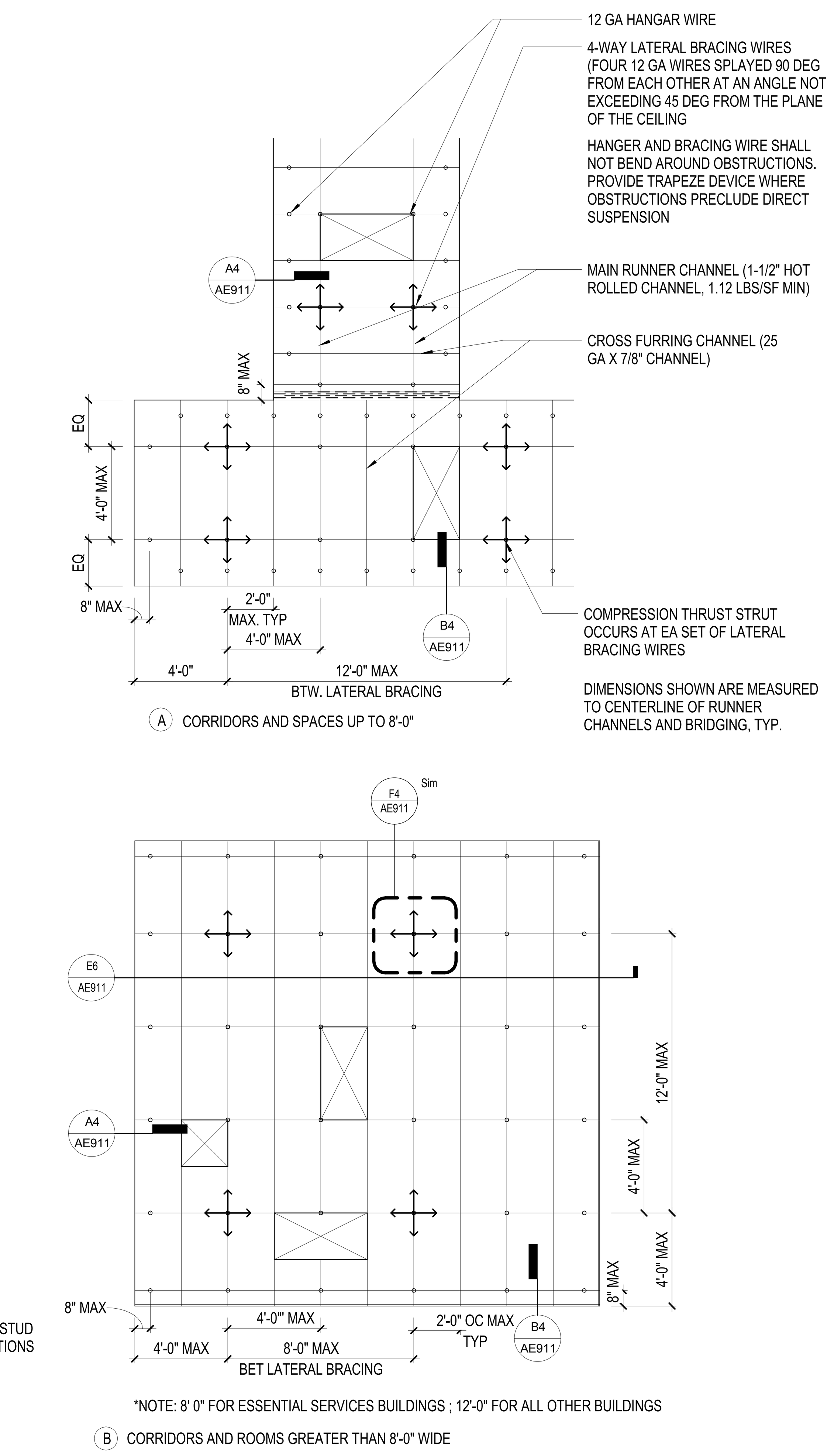

D6 SUSP GYP - SEISMIC ANCHORAGE KEY PLAN
SCALE: 1/4" = 1'-0"

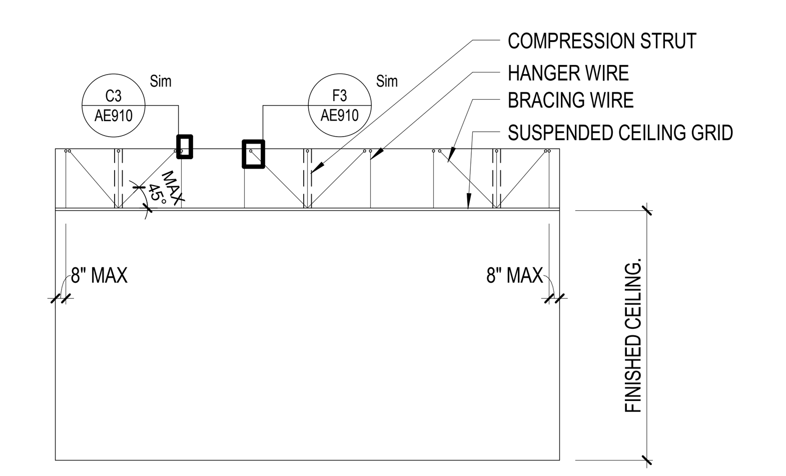

E6 SUSP GYP - SEISMIC BRACING DIAGRAM / SECTION
SCALE: 1/8" = 1'-0"

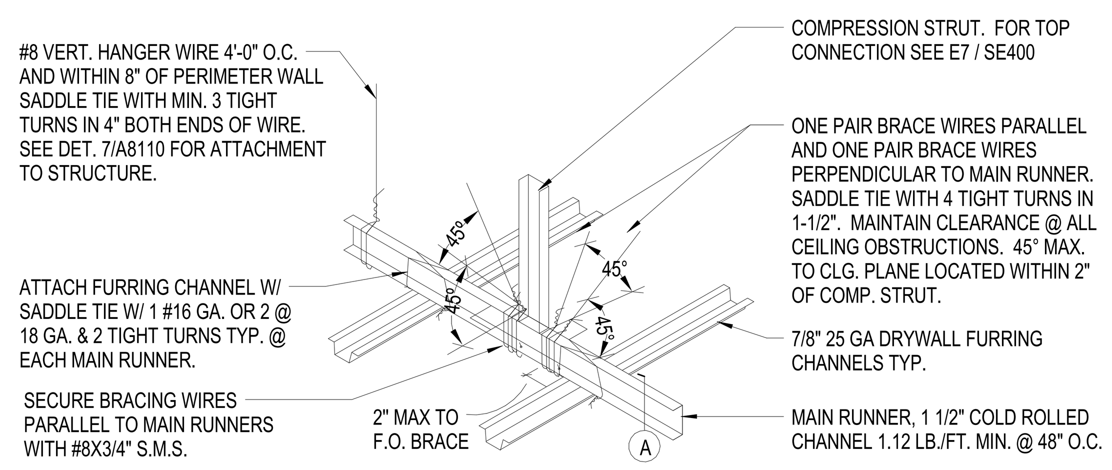

COMPRESSION STRUT SIZE TABLE:

LIMITING HEIGHT	STRUT SIZE
7' - 0 "	2 1/2" x 1 1/4" 20 GA
10' - 0"	4" 1 5/8" 20 GA
21' - 6"	4" x 2" 20 GA

NOTES:
1. MAX SLENDERNESS RATIO (K/r) OF 200. OTHER COMPRESSION STRUT SECTIONS MAY BE SUBMITTED WITH SUPPORTING CALCULTATIONS.
2. SCHEDULES COMPRESSION STRUTS BASED ON STEEL STUD MANUFACTURER'S ASSOCIATION STANDARDS WITH STEEL STRENGHT OF 33KSI
3. PREFABRICATED COMPRESSION MAY BE USED AS AN ALTERNATIVE: USG DOWN COMPRESSION POST TYPE VSA (ICC-ESR-1222) OR APPROVED EQUAL W ICC REPORT NUMBER

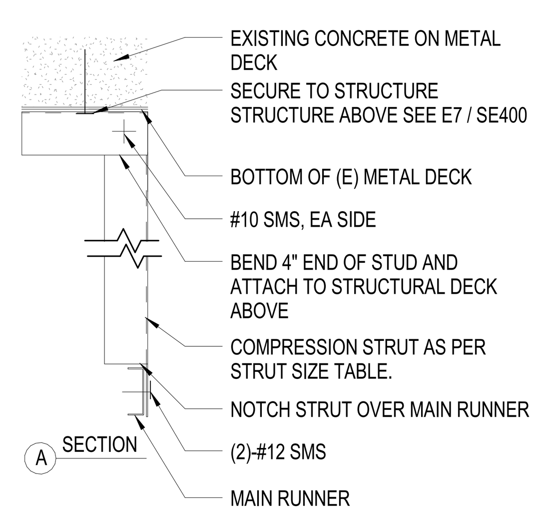

F4 SUSP GYP - COMPRESSION STRUT
SCALE: 3" = 1'-0"

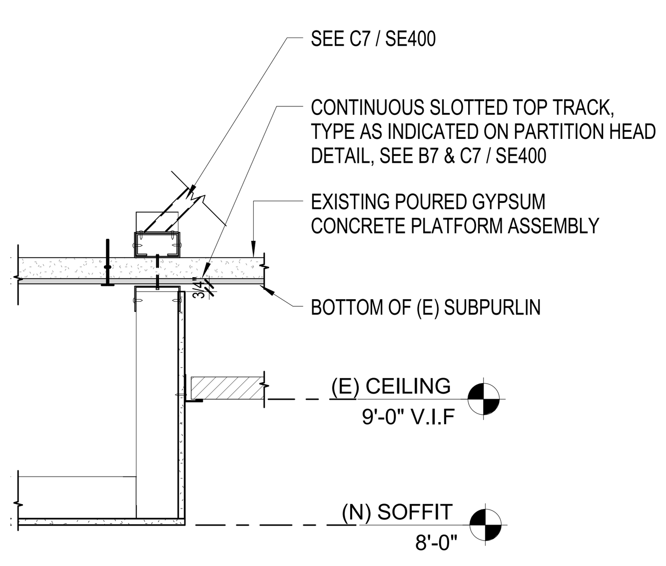

F2 SOFFIT TRANSITION
SCALE: 1" = 1'-0"

CONSTRUCTION DOCUMENTS
FULLY SPRINKLERED

No.	Description	Date
1	SCHEMATIC DESIGN (SD)	10/20/2015
2	DESIGN DEVELOPMENT (DD)	01/18/2016
3	CONSTRUCTION DOCUMENTS (CD)	03/30/2016

CONSULTANTS:
(SEE PROJECT TEAM DIRECTORY ON GI000 COVER SHEET)

Seals and Signatures

ARCHITECTS/ENGINEERS:
LEO A DALY
PLANNING ARCHITECTURE ENGINEERING INTERIORS
550 South Hope Street, 27th Floor
Los Angeles, California 90071, USA
213-629-0100 F213-629-0070
EST. 1915

Drawing Title: GYPSUM BOARD CEILING DETAILS

Approved: Project Director

Project Title: CONSTRUCT OPERATING ROOM #8

Location: 11201 BENTON STREET LOMA LINDA, CA 92357

Date: 03/30/2016 | Checked: MS | Drawn: TV

Project Number: 605-14-640
Building Number: 1
Drawing Number: AE911

Office of Construction and Facilities Management

Department of Veterans Affairs

VA FORM 08-6231
3/25/2016 3:27:14 PM C:\Users\mbsaquilayan\Documents\Autodesk\Revit 2013 Projects\046-10037-000_Central_mbsaquilayan.rvt

F1 FLOOR FINISH PLAN - LEVEL 3 - AREA D
SCALE: 1/4" = 1'-0"

SCALE : 1/4" = 1'-0"

SHEET NOTES

1. REFER TO SHEET AI301 FOR ROOM FINISH SCHEDULE AND MATERIAL FINISH SCHEDULE
2. REFER TO SHEET AE505 FOR THRESHOLD, FLOORING TRANSITION DETAILS

(E)	EXISTING
CPT	CARPET TILE
RF	RESIN FLOORING
RF-1	RESIN FLOORING
RSF	RESILIENT FLOORING
RSF-1	RESILIENT FLOORING

A	B
C	D
E	F
G	H

CONSTRUCTION DOCUMENTS
FULLY SPRINKLERED

No.	Description	Date
1	SCHEMATIC DESIGN (SD)	10/20/2015
2	DESIGN DEVELOPMENT (DD)	01/18/2016
3	CONSTRUCTION DOCUMENTS (CD)	03/30/2016

CONSULTANTS:

(SEE PROJECT TEAM DIRECTORY ON GI000 COVER SHEET)

Seals and Signatures

LICENSED ARCHITECT MICHELLE B. SAQUILAYAN No. C 32660 REN. 10-31-16 STATE OF CALIFORNIA

ARCHITECTS/ENGINEERS:

LEO A DALY
PLANNING ARCHITECTURE ENGINEERING INTERIORS
550 South Hope Street, 27th Floor
Los Angeles, California 90071, USA
213-629-0100 F213-629-0070
EST. 1915

Drawing Title: FLOOR FINISH PLAN - LEVEL 3 - AREA D

Approved: Project Director

Project Title: CONSTRUCT OPERATING ROOM #8

Location: 11201 BENTON STREET LOMA LINDA, CA 92357

Date	Checked	Drawn
03/30/2016	MS	TV

Project Number: 605-14-640

Building Number: 1

Drawing Number: AI101

Office of Construction and Facilities Management

Department of Veterans Affairs

VA FORM 08-6231

3/25/2016 7:32:53 PM C:\Users\mbsaquilayan\Documents\Autodesk\Revit 2013 Projects\046-10057-000_Central_mbsaquilayan.rvt

F1 WALL FINISH PLAN - LEVEL 3 - AREA D
SCALE: 1/4" = 1'-0"

SCALE : 1/4" = 1'-0"

SHEET NOTES

1. REFER TO SHEET AI301 FOR ROOM FINISH SCHEDULE AND MATERIAL FINISH SCHEDULE

LEGEND:

XX EXTENT OF ACCENT FINISH
XX FIELD WALL FINISH

A	B
C	D
E	F
G	H

CONSTRUCTION DOCUMENTS FULLY SPRINKLERED

No.	Description	Date
1	SCHEMATIC DESIGN (SD)	10/20/2015
2	DESIGN DEVELOPMENT (DD)	01/18/2016
3	CONSTRUCTION DOCUMENTS (CD)	03/30/2016

CONSULTANTS:

(SEE PROJECT TEAM DIRECTORY ON GI000 COVER SHEET)

Seals and Signatures

LICENSED ARCHITECT MICHELLE B. SAQUILAYAN No. C 32660 REN. 10-31-16 STATE OF CALIFORNIA

ARCHITECTS/ENGINEERS:

LEO A DALY
PLANNING ARCHITECTURE ENGINEERING INTERIORS
550 South Hope Street, 27th Floor
Los Angeles, California 90071, USA
213-629-0100 F213-629-0070
EST. 1915

Drawing Title: WALL FINISH PLAN

Approved: Project Director

Project Title: CONSTRUCT OPERATING ROOM #8

Location: 11201 BENTON STREET LOMA LINDA, CA 92357

Date: 03/30/2016 | Checked: MS | Drawn: PG

Project Number: 605-14-640

Building Number: 1

Drawing Number: AI102

Office of Construction and Facilities Management

Department of Veterans Affairs

VA FORM 08-6231

3/25/2016 7:32:58 PM C:\Users\mbsaquilayan\Documents\Autodesk\Revit 2013 Projects\046-10057-000_Central_mbsaquilayan.rvt

MATERIAL FINISH SCHEDULE

LOCATION	CODE	DESCRIPTION	BASIS OF DESIGN	NOTE
FLOOR				
RESIN FLOORING - O.R.	RF	RESIN FLOORING W/ 6" INTEGRAL COVED BASE	MNFR: STONHARD PRODUCT: STONRES RTZ COLOR: SANTA FE CONTACT: CARL BAGE, BUSINESS DEVELOPMENT GROUP - ARCHITECTURAL ENGINEER CELL: 818.516.2977 EMAIL: CBAGE@STONHARD.COM WEB: WWW.STONHARD.COM	
RESIN FLOORING - STAFF RESTROOMS & LOCKERS / SHOWERS	RF-1	RESIN FLOORING W/ 6" INTEGRAL COVED BASE	MNFR: STONHARD PRODUCT: STONTEC RF-1-1/16" FLAKE COLOR: MOJAVE BEIGE CONTACT: CARL BAGE, BUSINESS DEVELOPMENT GROUP - ARCHITECTURAL ENGINEER CELL: 818.516.2977 EMAIL: CBAGE@STONHARD.COM WEB: WWW.STONHARD.COM	
FAUX WOOD RESILIENT PLANK FLOORING AT STAFF LOUNGE	RSF	RESILIENT SHEET FLOORING	MNFR: SHANNON SPECIALTY FLOORING PRODUCT: TEKNOFLOR TYPE: FORESTSCAPES COLOR: 51022 MOUNTAIN WALNUT SIZE: 2.34MM THICK NON-CUSHIONED CONTACT: DREW ELSHOFF CELL: 626.674.3760 EMAIL: DREW@DMFLOORS.COM WEB: WWW.SHANNONSPECIALTYFLOORS.COM	
MEDICATION ROOM	RSF-1	RESILIENT / WELDED SHEET FLOORING	MNFR: JOHNSONITE IQ PRODUCT: RESILIENT WELDED SHEET FLOORING COLOR/PATTERN: GRANITE #463 CONTACT: ELLEN WREN, MARKET DEVELOPMENT MANAGER CELL: 213.842.0158 EMAIL: ELLEN.WREN@TARKETT.COM WEB: WWW.TARKETT.COM	
CARPET TILE AT STAFF WORK OFFICES	CPT	CARPET TILE	MNFR: INTERFACE PRODUCT: TO SCALE COLOR: 7776 DETAILS CONTACT: KRISTINA WURTZ COMPANY: INTERFACE TEL: 213.280.4180 EMAIL: KRISTINA.WURTZ@INTERFACE.COM WEB: WWW.INTERFACE.COM	VA LOMA LINDA STANDARD
WALLS				
PUBLIC & STAFF RESTROOM / TOILET WALL TILE	PT-1	PORCELAIN WALL TILE - FIELD	MNFR: TRINITY TILE PRODUCT: THREAD PATTERN COLOR: COTTON SIZE: 12 X 24 INSTALLATION: HORIZONTAL / STACKED CONTACT: READE PALMER COMPANY: SUSTAINABLE SURFACES TEL: 213.236.3629 CELL: 323.775.7086 EMAIL: READE@S2LA.COM WEB: WWW.S2LA.COM WEB: WWW.TRINITYTILE.COM	FULL HEIGHT (STACKED) USE 1/6" GROUT LINES (UNSANDED) CUSTOM BUILDING PRODUCTS PROVIDE APPROPRIATE PROFILE EDGING TRIMS (PE) AT EXPOSED EDGES STANDARD VA LOMA LINDA PORCELAIN TILE
PUBLIC & STAFF RESTROOM / TOILET WALL TILE	PT-2	PORCELAIN WALL TILE - ACCENT	MNFR: TRINITY TILE PRODUCT: THREAD PATTERN COLOR: FLAX SIZE: 12 X 24 INSTALLATION: HORIZONTAL / STACKED CONTACT: READE PALMER COMPANY: SUSTAINABLE SURFACES TEL: 213.236.3629 CELL: 323.775.7086 EMAIL: READE@S2LA.COM WEB: WWW.S2LA.COM WEB: WWW.TRINITYTILE.COM	FULL HEIGHT (STACKED) USE 1/6" GROUT LINES (UNSANDED) CUSTOM BUILDING PRODUCTS PROVIDE APPROPRIATE PROFILE EDGING TRIMS (PE) AT EXPOSED EDGES STANDARD VA LOMA LINDA PORCELAIN TILE
FIELD COLOR ON GWB	P-1	PAINT	MNFR: DUNN EDWARDS COLOR: DDE5497 TAPERING LIGHT FINISH: EGGSHELL CONTACT: LARRY LOO TEL: 626-590-7777 WEB: WWW.DUNNEDWARDS.COM	STANDARD VA LOMA LINDA PAINT COLOR
FIELD COLOR ON GWB - WET AREAS	P-1S	PAINT	FINISH: SATIN	
FIELD COLOR ON GWB - OR AREAS	P-1SS	SCRUB-ABLE PAINT	RUSTOLEUM S60 COLOR: DDE5497 TAPERING LIGHT FINISH: WATER BASED EXPOXY PRIMER: ULTRASHIELD MULTI SURFACE ULMS00	
FIELD COLOR ON GWB	P-2	ACCENT PAINT	MNFR: DUNN EDWARDS COLOR: DEC761 COCHISE FINISH: EGGSHELL CONTACT: LARRY LOO TEL: 626-590-7777 WEB: WWW.DUNNEDWARDS.COM	STANDARD VA LOMA LINDA PAINT COLOR
FIELD COLOR ON GWB - WET AREAS	P-2S	PAINT	FINISH: SATIN	
ACCENT COLOR ON GWB	P-3	ACCENT PAINT	MNFR: DUNN EDWARDS COLOR: DE5794 LAKE WINNIPEG FINISH: EGGSHELL CONTACT: LARRY LOO TEL: 626-590-7777 WEB: WWW.DUNNEDWARDS.COM	
FIELD COLOR ON GWB - WET AREAS	P-3S	PAINT	FINISH: SATIN	
FIELD COLOR ON GWB - OR AREAS	P-3SS	SCRUB-ABLE PAINT	RUSTOLEUM S60 COLOR: DE5794 LAKE WINNIPEG FINISH: WATER BASED EXPOXY PRIMER: ULTRASHIELD MULTI SURFACE ULMS00	
ACCENT COLOR ON GWB	P-4	ACCENT PAINT	MNFR: DUNN EDWARDS COLOR: DE5500 OLIVE HINT FINISH: EGGSHELL CONTACT: LARRY LOO TEL: 626-590-7777 WEB: WWW.DUNNEDWARDS.COM	
FIELD COLOR ON GWB - WET AREAS	P-4S	PAINT	FINISH: SATIN	

MATERIAL FINISH SCHEDULE (CONTINUED)

LOCATION	CODE	DESCRIPTION	BASIS OF DESIGN	NOTE
WALLS (CONT'D)				
ACCENT WALL PROTECTION	CG-1 WP-1	IMPACT RESISTANT ACROVYN WALL PROTECTION	MNFR: C/S ACROVYN FRAME SYSTEMS COLOR: #517 TETON WHITE FINISH: SUEDE TEXTURE CONTACT: ELISA CONTRERAS COMPANY: INTEGRATED MARKETING CONCEPTS, INC. TEL: 909.392.5500 CELL: 626.665.1321 EMAIL: ELISA@IMC-CA.COM WEB: WWW.IMC-CA.COM	
WALL SURROUND - O.R. & STORAGE ROOM	SS-1	WALL SURROUND - PROTECTION (FIELD)	MNFR: CORIAN MODEL: WET WALL PANEL SYSTEM OPTIONAL PANS COLOR: RICE PAPER THK: 1/4" FOR WALL CONTACT: MONICA SAMS TEL: 562.631.1078 EMAIL: MONICA.SAMS@DUPONT.COM WEB: WWW.DUPONT.COM	
WALL SURROUND - SHOWERS (TOILET ROOM / LOCKER ROOM)	SS-2	WALL SURROUND - PROTECTION	MNFR: AVONITE MODEL: WET WALL PANEL SYSTEM OPTIONAL PANS COLOR: MALT F1-7810 THK: 1/4" FOR WALL CONTACT: DEINISE BREITENBUCHER, ARCHITECTURAL CONSULTANT, CGBP-ROYAL PLYWOOD CO. TEL: 626.221.0494 EMAIL: DENISE@ROYALPLYWOOD.COM WEB: WWW.AVONITESURFACES.COM	
PLASTIC WALL GLAZING - WOMEN'S LOCKER ROOM	PG-2	PLASTIC WALL GLAZING - FEATURED WALL APPLICATION	MNFR: 3FORM STYLE: FLOCK STEM GAUGE: 1/2" SIZE: 16"W X 6'-10"H FINISH: FRONT - SANDSTONE CONTACT: HARRIET MORGAN CELL: 213.507.7910 EMAIL: HARRIETMORGAN@3-FORM.COM WEB: WWW.3-FORM.COM	
PLASTIC WALL GLAZING - MEN'S LOCKER ROOM	PG-3	PLASTIC WALL GLAZING - FEATURED WALL APPLICATION	MNFR: 3FORM STYLE: FLOCK COVE GAUGE: 1/2" SIZE: 16"W X 6'-10"H FINISH: FRONT - PATINA CONTACT: HARRIET MORGAN CELL: 213.507.7910 EMAIL: HARRIETMORGAN@3-FORM.COM WEB: WWW.3-FORM.COM	
WALL BASE				
RUBBER WALL BASE AT PUBLIC SPACES - CORRIDORS, LOBBY, & WAITING AREA	RB	RUBBER BASE	MNFR: JOHNSONITE PRODUCT: FINISHING BORDERS / WALL BASE COLOR #: 45 SANDALWOOD WB THICKNESS: 1/8" TOELESS BASE HEIGHT: 6" CONTACT: ELLEN WREN COMPANY: TARKETT JOHNSONITE, INC. CELL: 213.842.0158 EMAIL: ELLEN.WREN@TARKETT.COM WEB: WWW.JOHNSONITE.COM	
CEILING				
MEDICATION ROOM	ACT-SP	ACOUSTIC CEILING TILE	MNFR: ARMSTRONG PRODUCT: ULTIMA HEALTH ZONE SIZE: 2' x 4' GRID SUSPENSION: 15/16" SQUARE LAY-IN CONTACT: MATTHEW J. SANDER, CSI TEL: 323.219.5036 EMAIL: MJSANDER@ARMSTRONGCEILINGS.COM WEB: WWW.ARMSTRONG.COM	
OFFICES & BACK OF HOUSE SPACES (SEE ROOM FINISH SCHEDULE)	ACT-1	ACOUSTIC CEILING TILE	MNFR: ARMSTRONG PRODUCT: MESA SECOND LOOK, TEGULAR SIZE: 2' x 4' GRID SUSPENSION: SILHOUETTE XL 9/16" BOLT-SLOT 1/4" REVEAL CONTACT: MATTHEW J. SANDER TEL: 323.219.5036 EMAIL: MJSANDER@ARMSTRONGCEILINGS.COM WEB: WWW.ARMSTRONG.COM	
FIELD COLOR ON GWB CEILING	P-GWB	PAINT	MNFR: DUNN EDWARDS COLOR: DE5497 TAPERING LIGHT FINISH: FLAT CONTACT: LARRY LOO TEL: 626-590-7777 WEB: WWW.DUNNEDWARDS.COM	STANDARD VA LOMA LINDA PAINT COLOR

MATERIAL FINISH SCHEDULE (CONTINUED)

LOCATION	CODE	DESCRIPTION	BASIS OF DESIGN	NOTE
MISCELLANEOUS				
SLIDER DOORS BETWEEN O.R. & STORAGE ROOM	GL-2	SLIDER DOOR SYSTEM W/ SWITCHABLE GLASS	MNFR: HORTON DOORS TYPE: ICU SLIDING GLASS DOORS WITH BREAKAWAY DOOR GLAZING: SWITCHABLE TEMPERED GLASS THICKNESS: 4MM THICK HORTON DOORS CONTACT: KARL SHARLAKIAN EMAIL: KARL_SHARLAKIAN@OVERHEADDOOR.COM WEB: WWW.HORTONDOORS.COM SWITCHABLE TEMPERED & LEAD SHIELDED GLASS ULTRARAY CONTACT: ROBERT FINCH MOBILE: 905.338.6857 X 235 RFINCH@ULTRARAY.COM WEB: HTTP://ULTRARAY.COM	
DOORS & FRAMES	IRP	IMPACT RESISTANT ACROVYN DOOR & FRAME PROTECTION	MNFR: C/S ACROVYN COLOR: #656 SUNLIT MAPLE FINISH: SUEDE TEXTURE CONTACT: ELISA CONTRERAS COMPANY: INTEGRATED MARKETING CONCEPTS, INC. TEL: 909.392.5500 CELL: 626.665.1321 EMAIL: ELISA@IMC-CA.COM WEB: WWW.IMC-CA.COM	
TOILET PARTITIONS	SP-1	SPC PANELS - HPDL (HIGH PRESSURE DECORATIVE LAMINATE)	MNFR: WILSONART TYPE: COMPACT HPDL COLOR: AMBER CHERRY 7919-60 CONTACT: JOE CHON, SPECIFICATIONS REPRESENTATIVE CELL: 562.781.4056 EMAIL: CHONJ@WILSONART.COM WEB: WWW.WILSONART.COM	
UNIT SHOWER/ BATHS	MT-1	SHOWER ROD	MNFR: BOBRICK MATERIAL: TYPE 304 STAINLESS STEEL FINISH: SATIN MODEL: CLASSIC SERIES B-6107 SIZE: 1"Ø X 20 GA CONTACT: CUSTOMER SERVICE TEL: 818-982-9600 www.bobrick.com	
STAFF SHOWERS	SC-1	SHOWER CURTAIN	MNFR: ARC | COM PATTERN: TIDAL STRIPE-X NUMBER: AC-33238 X COLOR: TROPICANA #9 CONTENT: 57% RECYCLED FR POLYESTER, 40% FR POLYESTER, 3% XSTATIC SILVER ANTIMICROBIAL FIBER ENVIRONMENTAL: RECYCLED CONTENT CONTACT: STACY NOCHENSON, SALES REPRESENTATIVE CELL: 310.903.7342 EMAIL: SNOCHENSON@ARC-COM.COM WEB: WWW.ARC-COM.COM	STANDARD VA LOMA LINDA CUBICLE CURTAIN PROVIDE CLEAR LINING
GUARDRAILS / HANDRAILS / CRASH RAILS CORRIDORS/HALLWAYS	R-1	GUARDRAILS / HANDRAILS / CRASH RAILS	MNFR: C/S ACROVYN COLOR: #656 SUNLIT MAPLE TYPE: ACROVYN 4000 (HRB-20N) TYPE: ACROVYN SCR-50N CONTACT: ELISA CONTRERAS COMPANY: INTEGRATED MARKETING CONCEPTS, INC. TEL: 909.392.5500 CELL: 626.665.1321 EMAIL: ELISA@IMC-CA.COM WEB: WWW.IMC-CA.COM	GUARDRAILS / HANDRAILS CRASH RAIL
PROFILE EDGE TRIM	PE-1	STAINLESS STEEL PROFILE EDGING	MNFR: SCHLUTER SYSTEMS TYPE: TBD CONTACT: COMPANY: TEL: CELL: EMAIL: WEB: WWW.SCHLUTER.COM	
MEDICAL EQUIPMENT STRAP	STP-1	MEDICAL EQUIPMENT STRAP	MNFR: SAFE - T -PROOF TYPE: STP-MP-202-16 COLOR: PUTTY WEB: WWW.SAFE-T-PROOF.COM	

ROOM FINISH SCHEDULE

ROOM NO.	ROOM NAME	FLOOR	BASE	WALLS NORTH	WALLS EAST	WALLS SOUTH	WALLS WEST	CEILING	REMARKS
3F-01	ANESTHESIA CHIEF OFFICE	CPT	RB	P-2	P-1	P-1	P-2	ACT-1	
3F-02	ANESTHESIA WORKSTATIONS	CPT	RB	P-1	P-1	P-1	P-2/P-3	ACT-1	CG-1 & P-2 AT COLUMN
3F-02A	MEDICATION RM	RSF-1	RSF-1	P-3SS	P-1SS	P-1SS	P-3SS	ACT-SP	WP-1
3F-03	STAFF LOUNGE / BREAKROOM	RSF	RB	P-1S	P-2S	P-4S	P-2S	ACT-1	WP-1
3F-04	ANESTHESIA WORKSTATIONS / MTG ROOM	CPT	RB	P-1	P-1	P-1	P-2	ACT-1	
3F-10	(E) RECEPTION	(E)	RB	(E)		(E)	P-1	(E)	MATCH EXISTING RUBBER BASE
3F-11	ROBOTIC STORAGE	RF	RF	P-1SS	GL-2/P-1SS	P-1SS	P-1SS	ACT-SP	WP-1
3F-22	MNGR. OFFICE	CPT	RB	P-1	P-1	P-2	P-2	ACT-1	
3F-25	VESTIBULE	RSF	RSF	P-2	P-1	P-1	P-2	P-GWB	PG-1
3F-26	FEMALE STAFF LOCKERS	RF-1	RF-1	P-1S	P-1S/PG-2/ P-2S/PT-1	PT-1	P-2S	P-GWB	CG-1
3F-26A	FEMALE STAFF TOILETS / SHOWERS	RF-1	RF-1	PT-1/SS-2	PT-1/SS-2	PT-1/PT-2	PT-1	P-GWB	PG-2 / SP-1 / MT-1
3F-27	VESTIBULE	RSF	RF-1	P-1	P-1	P-4	P-1	P-GWB	PG-1
3F-28	MALE STAFF LOCKERS	RF-1	RF-1	P-1S	P-2S	PT-1	P-1S/PG-3/ P-2S/PT-1	P-GWB	CG-1 / MT-1
3F-28A	MALE STAFF TOILETS / SHOWERS	RF-1	RF-1	PT-1	PT-1	PT-1	PT-1	P-GWB	PG-3 / SP-1 / MT-1
3F-33	ROBOTIC OR	RF	RF	SS-1	SS-1	SS-1	GL-2/SS-1	GWB-SC	

C3-42C	(E) CORR	RSF	RB	(E)	(E)	(E)	P-1	(E)	DF-1 / R-1 / CG-1
C3-44A	ALCOVE, D.F.	RSF-1	RSF-1	PT-2	PT-1		PT-1	P-3S	CG-1
C3-61A	SCRUB SINK	RF	RF	P-1S		P-1S	P-3S	ACT-1	CG-1
C3-44	(E) CORR	(E)	(E)	P-1	(E)	P-1		(E)	CG-1 / R-1
C3-61	(E) CORR	(E)	(E) / RB	P-1S	(E)	(E)	P-2S	(E)	DF-1 / R-1 / CG-1

CONSTRUCTION DOCUMENTS
FULLY SPRINKLERED

No.	Description	Date
1	SCHEMATIC DESIGN (SD)	10/20/2015
2	DESIGN DEVELOPMENT (DD)	01/18/2016
3	CONSTRUCTION DOCUMENTS (CD)	03/30/2016

CONSULTANTS:
(SEE PROJECT TEAM DIRECTORY ON GI000 COVER SHEET)

Seals and Signatures

ARCHITECTS/ENGINEERS:

LEO A DALY
PLANNING ARCHITECTURE ENGINEERING INTERIORS
550 South Hope Street, 27th Floor
Los Angeles, California 90071, USA
213-629-0100 F213-629-0070
EST. 1915

Drawing Title: MATERIAL FINISH SCHEDULE

Project Title: CONSTRUCT OPERATING ROOM #8

Project Number: 605-14-640

Building Number: 1

Approved: Project Director

Location: 11201 BENTON STREET LOMA LINDA, CA 92357

Drawing Number: AI301

Date: 03/30/2016 | Checked: MS | Drawn: PG

Office of Construction and Facilities Management

Department of Veterans Affairs

VA FORM 08-6231

3/25/2016 7:33:00 PM C:\Users\mbsaguilayan\Documents\Autodesk\Revit 2013 Projects\046-10037-000_Central_mbsaguilayan.rvt

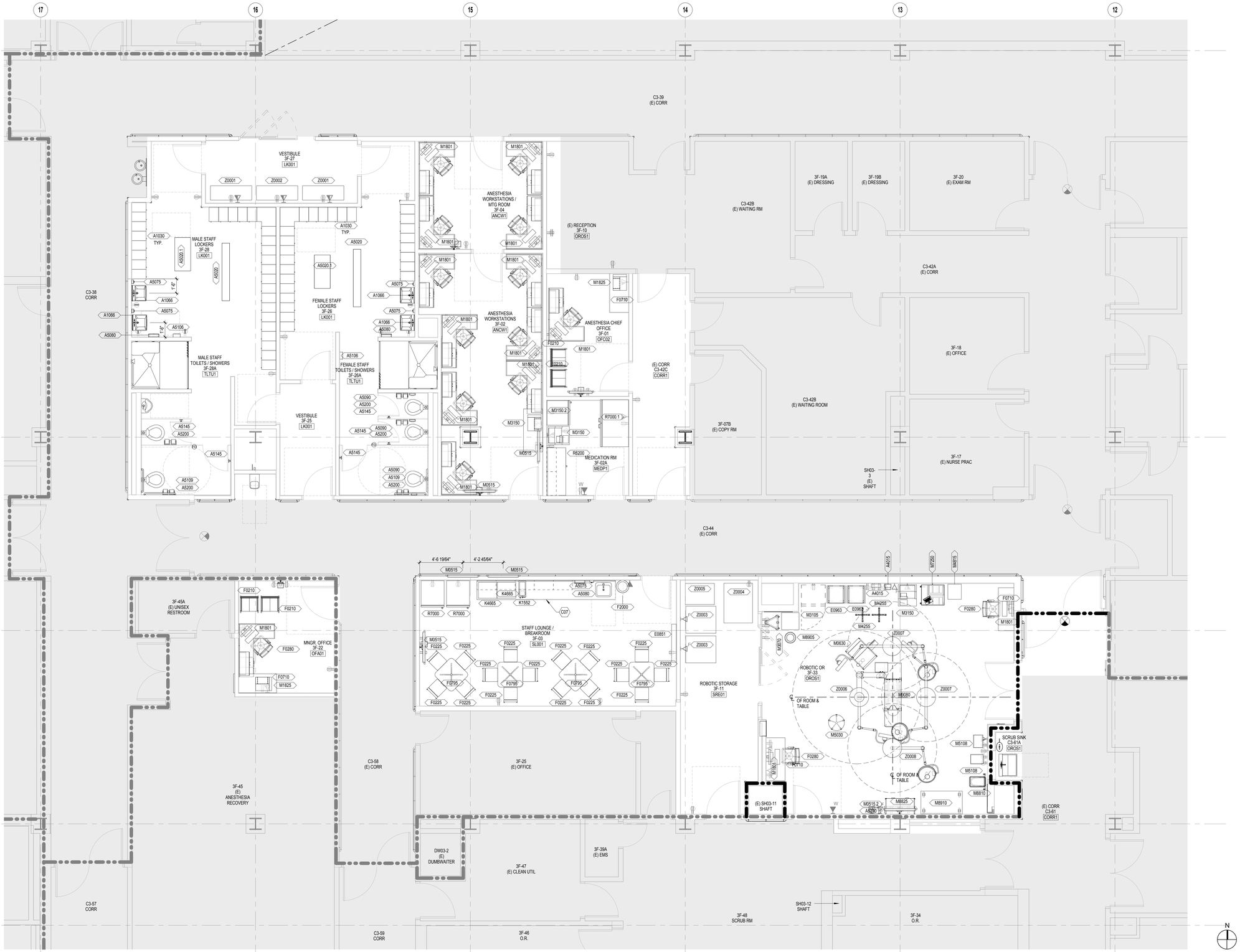

F1 **FF&E PLAN - LEVEL 3 - AREA D**
SCALE: 1/4" = 1'-0"

0 2' 4' 8'
SCALE : 1/4" = 1'-0"

SHEET NOTES

1. ALL AREAS OUTSIDE OF THE PROJECT SCOPE MUST REMAIN IN OPERATION THROUGHOUT CONSTRUCTION.
2. ALL FF & E IS TO BE PROVIDED BY THE VA, BUT INSTALLED BY THE CONTRACTOR, U.O.N.
3. ELECTRICAL AND DATA OUTLETS SHOWN ARE ONLY FOR REFERENCE. REFER TO ELECTRICAL AND LOW VOLTAGE DRAWINGS FOR ADDITIONAL INFORMATION

KEYNOTES

C07	MODULAR BASE CABINET,PROVIDE BACKING PER DETAIL A5/SE400 AND D5/SE400

LEGEND: FLOOR PLAN

- EXISTING CONSTRUCTION TO REMAIN
- NEW CONSTRUCTION
- EXISTING 1-HR RATED WALL TO REMAIN
- NEW 1-HR RATED WALL
- EXISTING 2-HR RATED WALL TO REMAIN
- NEW 2-HR RATED WALL
- (N) EQUIPMENT OR RELOCATED (E) EQUIPMENT- SEE EQUIPMENT LIST WITH SPECIFICATIONS
- AREA OF BUILDING NOT IN SCOPE OF WORK
- # EXTENT OF LEAD SHIELDING, SEE PLAN NOTES #8

KEY PLAN

A	B
C	D
E	F
G	H

CONSTRUCTION DOCUMENTS
FULLY SPRINKLERED

No.	Description	Date
1	SCHEMATIC DESIGN (SD)	10/20/2015
2	DESIGN DEVELOPMENT (DD)	01/18/2016
3	CONSTRUCTION DOCUMENTS (CD)	03/30/2016

CONSULTANTS:

(SEE PROJECT TEAM DIRECTORY ON GI000 COVER SHEET)

Seals and Signatures

LICENSED ARCHITECT MICHELLE B SAGULAPAN C 32660 EXP. 10-31-16 STATE OF CALIFORNIA

ARCHITECTS/ENGINEERS:

LEO A DALY
PLANNING ARCHITECTURE ENGINEERING INTERIORS
550 South Hope Street, 27th Floor
Los Angeles, California 90071, USA
213-629-0100 F213-629-0070
EST. 1915

Drawing Title
FURNITURE, FURNISHING, AND EQUIPMENT PLAN - LEVEL 3 - AREA D

Approved: Project Director

Project Title
CONSTRUCT OPERATING ROOM #8

Location
11201 BENTON STREET
LOMA LINDA, CA 92357

Date 03/30/2016 | Checked MS | Drawn TV

Project Number 605-14-640

Building Number 1

Drawing Number **QH101**

Office of Construction and Facilities Management

Department of Veterans Affairs

VA FORM 08-6231

3/30/2016 2:51:17 PM \\ldc-sbr-104c1-001-v01.LDP.P_PUBLISHED\Y-C08-ARCH-100-CD-v01
Documents:16-330-100PHED-Y-C08-ARCH-100-CD-v01.rvt

FF&E SCHEDULE - ANCW1 - ANESTHESIA WORKSTATIONS/ MTG ROOM

JSN	DESCRIPTION	Manufacturer	Model	QTY	VA CAT	PLUMBING	ELECTRICAL/ DATA	REMARKS
A5210	WALL MNTD TV BRACKET W/ ADJ. ARM	TBD	TBD	1	B			REFER TO BACKING DETAILS A5/SE500 AND D5/SE400
F0280	LOW BACK SWIVEL CHAIR	TBD	TBD	4	C			
M0515.1	32" TELEVISION/ MONITOR	TBD	TBD	1	B		YES	
M1801	COMPUTER W/ MONITOR	TBD	TBD	4	C		YES	

FF&E SCHEDULE - OFC02- ANESTHESIA CHIEF OFFICE

JSN	DESCRIPTION	Manufacturer	Model	QTY	VA CAT	PLUMBING	ELECTRICAL/ DATA	REMARKS
A5210	WALL MNTD TV BRACKET W/ ADJ. ARM	TBD	TBD	1	B			REFER TO BACKING DETAILS A5/SE500 AND D5/SE400
F0210	SIDE CHAIR W/O ARMS	TBD	TBD	2	C			
F0280	LOW BACK SWIVEL CHAIR	TBD	TBD	1	C			
F0710	COMPUTER TABLE	TBD	TBD	1	C		YES	
M0515.1	32" TELEVISION/ MONITOR	TBD	TBD	1	B		YES	
M1801	COMPUTER W/ MONITOR	TBD	TBD	1	C		YES	
M1825	PRINTER, COMPUTER	TBD	TBD	1	C		YES	

FF&E SCHEDULE - OFA01- OR NURSE MANAGER OFFICE

JSN	DESCRIPTION	Manufacturer	Model	QTY	VA CAT	PLUMBING	ELECTRICAL/ DATA	REMARKS
A5210	WALL MNTD TV BRACKET W/ ADJ. ARM	TBD	TBD	1	B			REFER TO BACKING DETAILS A5/SE500 AND D5/SE400
F0210	SIDE CHAIR W/O ARMS	TBD	TBD	2	C			
F0280	LOW BACK SWIVEL CHAIR	TBD	TBD	1	C			
F0710	COMPUTER TABLE	TBD	TBD	1	C		YES	
M0515.1	32" TELEVISION/ MONITOR	TBD	TBD	1	B		YES	
M1801	COMPUTER W/ MONITOR	TBD	TBD	1	C		YES	
M1825	PRINTER, COMPUTER	TBD	TBD	1	C		YES	

FF&E SCHEDULE - LK001 - MALE STAFF LOCKERS / SHOWER / TOILET

JSN	DESCRIPTION	Manufacturer	Model	QTY	VA CAT	PLUMBING	ELECTRICAL/ DATA	REMARKS
A1030	OVER-UNDER 2 PERSON LOCKER	IDEAL	IDEAL 2000 MODEL B	28	B			SEE DETAIL F4/AE505 FOR ANCHORAGE; PROVIDE SLOPING TOP AND FINISHED PANELS AT ALL EXPOSED ENDS
A1066	MIRROR W/ S.S. FRAME	AMERICAN SPECIALTIES, INC.	20650-B	2	B			
A5020	FLOOR MOUNTED LOCKER ROOM BENCH	TBD	TBD	1	B			
A5020.1	FLOOR MOUNTED LOCKER ROOM ACCESSIBLE BENCH	TBD	TBD	1	B			WITH BACK SUPPORT
A5075	SURFACE MNTD SOAP DISPENSER	GEORGIA PACIFIC	52053	2	B			REFER TO BACKING DETAILS A5/SE500 AND D5/SE400
A5080	SURFACE MNTD PAPER TOWEL DISPENSER	GEORGIA PACIFIC	59462	1	B			REFER TO BACKING DETAILS A5/SE500 AND D5/SE400
A5106	WALL MNTD SURGICAL GLOVE DISPENSER	TBD	TBD	1	B			
A5109	GRAB BAR SS	BOBRICK	B-5837.99	1	A			REFER TO BACKING DETAILS A5/SE500 AND D5/SE400
A5145	SURFACE MNTD DOUBLE GARMENT HOOK	AMERICAN SPECIALTIES	7340	2	B			
A5170	ROD, SHOWER CURTAIN, 1" DIAMETER CURTAIN HOOKS	TBD	TBD	1	C			
A5200	SURFACE MNTD TOILET TISSUE DISPENSER	TBD	TBD	2	B			

FF&E SCHEDULE - LK001 - FEMALE STAFF LOCKERS / SHOWER / TOILETS

JSN	DESCRIPTION	Manufacturer	Model	QTY	VA CAT	PLUMBING	ELECTRICAL / DATA	REMARKS
A1030	OVER-UNDER 2 PERSON LOCKER	IDEAL	IDEAL 2000 MODEL B	25	B			SEE DETAIL F4/AE505 FOR ANCHORAGE; PROVIDE SLOPING TOP AND FINISHED PANELS AT ALL EXPOSED ENDS
A1066	MIRROR W/ S.S. FRAME	AMERICAN SPECIALTIES, INC.	20650-B	2	B			
A5020	FLOOR MOUNTED LOCKER ROOM BENCH	TBD	TBD	1	B			
A5020.1	FLOOR MOUNTED LOCKER ROOM ACCESSIBLE BENCH	TBD	TBD	1	B			WITH BACK SUPPORT
A5075	SURFACE MNTD SOAP DISPENSER	GEORGIA PACIFIC	52053	2	B			REFER TO BACKING DETAILS A5/SE500 AND D5/SE400
A5080	SURFACE MNTD PAPER TOWEL DISPENSER	GEORGIA PACIFIC	59462	1	B			REFER TO BACKING DETAILS A5/SE500 AND D5/SE400
A5090	SURFACE MNTD FEMININE NAPKIN DISPOSAL	TBD	TBD	4	B			
A5106	WALL MNTD SURGICAL GLOVE DISPENSER	TBD	TBD	1	B			
A5109	GRAB BAR SS	BOBRICK	B-5837.99	1	A			REFER TO BACKING DETAILS A5/SE500 AND D5/SE400
A5145	SURFACE MNTD DOUBLE GARMENT HOOK	AMERICAN SPECIALTIES	7340	3	B			
A5170	ROD, SHOWER CURTAIN, 1" DIAMETER CURTAIN HOOKS	TBD	TBD	1	C			
A5200	SURFACE MNTD TOILET TISSUE DISPENSER	TBD	TBD	3	B			

FF&E SCHEDULE - LK001 - LOCKER VESTIBULE

JSN	DESCRIPTION	Manufacturer	Model	QTY	VA CAT	PLUMBING	ELECTRICAL/ DATA	REMARKS
Z0001	SCRUBS AUTOMATED DISPENSER	INNOVATION PASSION AUTOMATION	SCRUBEX 128 LV	2	B		YES	RELOCATE EXISTING; ANCHORAGE PER MANUFACTURER'S RECOMMENDATION
Z0002	SCRUBS AUTOMATED RECEIVER	INNOVATION PASSION AUTOMATION	SCRUBEX 128 LV	1	B		YES	RELOCATE EXISTING; ANCHORAGE PER MANUFACTURER'S RECOMMENDATION

FF&E SCHEDULE - MEDP1- MEDICATION ROOM

JSN	DESCRIPTION	Manufacturer	Model	QTY	VA CAT	PLUMBING	ELECTRICAL/ DATA	REMARKS
CE080	UPPER CABINET, MODULAR	TBD	TBD	2	B			5'-0" TOTAL LENGTH. PROVIDE VERTICAL FILLER; REFER TO BACKING DETAILS A5/SE500 AND D5/SE400
CT030	BASE CABINET WITH COUNTERTOP, MODULAR	TBD	TBD	1	B			5'-0" TOTAL LENGTH; REFER TO BACKING DETAILS A5/SE500 AND D5/SE400
M3150	MEDICATION DISTRIBUTION SYSTEM	PYXIS CORPORATION	MEDSTATION 4000 (6-MAIN DRAWER)	1	B		YES	TETHERING PER DETAIL F5/AE610
M3150.2	AUXILIARY CABINET	TBD	TBD	1	B		YES	TETHERING PER DETAIL F5/AE610
R6200	PHARMACY REFRIGERATOR, UNDERCOUNTER	HELMET SCIENTIFIC	i.Series iLR105	1	B		YES	REQUIRES 29" CLEARANCE IN FRONT
R7000.1	PHARMACY REFRIGERATOR	HELMET SCIENTIFIC	i.Series iPR256	1	B		YES	TETHERING PER DETAIL F5/AE610

FF&E SCHEDULE - SL001- BREAKROOM

JSN	DESCRIPTION	Manufacturer	Model	QTY	VA CAT	PLUMBING	ELECTRICAL/ DATA	REMARKS
A5075	SURFACE MNTD SOAP DISPENSER	GEORGIA PACIFIC	52053	1	B			REFER TO BACKING DETAILS A5/SE500 AND D5/SE400
A5080	SURFACE MNTD PAPER TOWEL DISPENSER	GEORGIA PACIFIC	59462	1	B			REFER TO BACKING DETAILS A5/SE500 AND D5/SE400
A5210	WALL MNTD TV BRACKET W/ ADJ. ARM	TBD	TBD	1	B			REFER TO BACKING DETAILS A5/SE500 AND D5/SE400
CE080	UPPER CABINET, MODULAR	TBD	TBD	5	B			10'-0" TOTAL LENGTH; PROVIDE SLOPING TOP; REFER TO BACKING DETAILS A5/SE500 AND D5/SE400
CT030	BASE CABINET WITH COUNTERTOP, MODULAR	TBD	TBD	1	B			14'-6" TOTAL LENGTH; 36" WIDE MODULE FOR ACCESSIBLE BASE CABINET WITH SINK; REFER TO BACKING DETAILS A5/SE500 AND D5/SE400
E0851	WALL MOUNTED DISPLAY TAKBOARD/ MARKERBOARD	TBD	TBD	1	B			REFER TO BACKING DETAILS A5/SE500 AND D5/SE400
F0225	DINING ROOM CHAIR	TBD	TBD	16	C			
F0795	DINING TABLE	TBD	TBD	4	C			
F2000	WASTE BASKET	TBD	TBD	1	C			
K1552	COFFEE BREWER	TBD	TBD	1	C		YES	
K4665	MICROWAVE	TBD	TBD	2	C		YES	
M0515	42" TELEVISION/ MONITOR	TBD	TBD	1	B		YES	
R7000	REFRIGERATOR 14CF	TBD	TBD	2	B		YES	TETHERING PER DETAIL F5/AE610

FF&E SCHEDULE - OROS1- ROBOTIC OR

JSN	DESCRIPTION	Manufacturer	Model	QTY	VA CAT	PLUMBING	ELECTRICAL/ DATA	REMARKS
A4015	ELAPSE TIMER	TBD	TBD	2	B			REFER TO BACKING DETAILS A5/SE500 AND D5/SE400
A5108	WASTE DISPOSAL UNIT, SHARPS	TBD	TBD	2	B			REFER TO BACKING DETAILS A5/SE500 AND D5/SE400
A5210	WALL MNTD TV BRACKET W/ ADJ. ARM	TBD	TBD	1	B			REFER TO BACKING DETAILS A5/SE500 AND D5/SE400
E0963	CART, GENERAL STORAGE, MOBILE	TBD	TBD	2	B			TETHERING PER DETAIL F5/AE610
F0280	LOW BACK SWIVEL CHAIR	TBD	TBD	2	C			
F0710	COMPUTER TABLE	TBD	TBD	2	C		YES	
M0515.2	55" MONITOR	TBD	TBD	1	B			
M0630	ANESTHESIA APPARATUS, 3 GAS	TBD	TBD	1	C			
M1801	COMPUTER W/ MONITOR	TBD	TBD	2	C		YES	
M3070	MOBILE LINEN HAMPER	TBD	TBD	1	C			
M3105	CABINET, WARMING	TBD	5524	1	B		YES	TETHERING PER DETAIL F5/AE610
M3150	MEDICATION DISTRIBUTION SYSTEM	PYXIS CORPORATION	MEDSTATION 4000 (6-MAIN DRAWER)	1	B		YES	TETHERING PER DETAIL F5/AE610
M4255	STAND, IV, ADJUSTABLE	TBD	TBD	2	C			
M4815	HYPERTHERMIA UNIT	TBD	TBD	1	C			
M5030	STOOL	TBD	TBD	1	C			
M7250	MEDICATION CART	TBD	TBD	1	C			
M8810	STAND, MAYO	TBD	TBD	1	C			
M8825	TABLE, INSTRUMENT, DRESSING	TBD	TBD	1	C			
M8905	PAIL, UTLITY, CRS, WITHOUT CARRIAGE	TBD	TBD	1	C			
M8910	CART, SURGICAL CASE	TBD	TBD	1	C			
M9080	TABLE, OPERATING	STRYKER	TBD	1	B			
Z0006	CEILING MOUNTED SURGICAL BOOM AND MONITOR	STRYKER	TP-622-C	1	B		YES	SEE SHEET SE500 FOR ANCHORAGE
Z0007	CEILING MOUNTED SURGICAL LIGHT AND MONITOR	STRYKER	CHROMOPHARE F 628/ SFP	2	B		YES	SEE SHEET SE500 FOR ANCHORAGE
Z0008	CEILING MOUNTED SURGICAL LIGHT	STRYKER	CHROMOPHARE F 628/ SFP	1	B		YES	SEE SHEET SE500 FOR ANCHORAGE

FF&E SCHEDULE - SRE01- EQUIPMENT STORAGE

JSN	DESCRIPTION	Manufacturer	Model	QTY	VA CAT	PLUMBING	ELECTRICAL/ DATA	REMARKS
Z0003	DA VINCI SURGEON CONSOLE	DA VINCI SURGICAL SYSTEM	DA VINCI SI	2	B		YES	RELOCATED EXISTING
Z0004	PATIENT CART	DA VINCI SURGICAL SYSTEM	DA VINCI SI	1	B		YES	RELOCATE EXISTING
Z0005	DA VINCI SURGEON CONSOLE	DA VINCI SURGICAL SYSTEM	DA VINCI SI	1	B		YES	RELOCATED EXISTING

FF&E SCHEDULE - ANCW1 - ANESTHESIA WORKSTATIONS

JSN	DESCRIPTION	Manufacturer	Model	QTY	VA CAT	PLUMBING	ELECTRICAL/ DATA	REMARKS
A5210	WALL MNTD TV BRACKET W/ ADJ. ARM	TBD	TBD	2	B			REFER TO BACKING DETAILS A5/SE500 AND D5/SE400
F0280	LOW BACK SWIVEL CHAIR	TBD	TBD	7	C			
F0710	COMPUTER TABLE	TBD	TBD	1	C		YES	
M0515	42" TELEVISION/ MONITOR	TBD	TBD	2	B		YES	
M1801	COMPUTER W/ MONITOR	TBD	TBD	7	C		YES	
M1825	PRINTER, COMPUTER	TBD	TBD	1	C		YES	

LEGEND:

A - CONTRACTOR FURNISHED, CONTRACTOR INSTALLED
B - OWNER FURNISHED, CONTRACTOR INSTALLED
C - OWNER FURNISHED, OWNER INSTALLED

CONSTRUCTION DOCUMENTS
FULLY SPRINKLERED

No.	Description	Date
1	SCHEMATIC DESIGN (SD)	10/20/2015
2	DESIGN DEVELOPMENT (DD)	01/18/2016
3	CONSTRUCTION DOCUMENTS (CD)	03/30/2016

CONSULTANTS:

(SEE PROJECT TEAM DIRECTORY ON GI000 COVER SHEET)

Seals and Signatures

LICENSED ARCHITECT MICHELLE B SAQUILAYAN C 32660 R.N. 10-31-16 STATE OF CALIFORNIA

ARCHITECTS/ENGINEERS:

LEO A DALY
PLANNING ARCHITECTURE ENGINEERING INTERIORS
550 South Hope Street, 27th Floor
Los Angeles, California 90071, USA
213-629-0100 F213-629-0070
EST. 1915

Drawing Title: **EQUIPMENT SCHEDULE**

Approved: Project Director

Project Title: **CONSTRUCT OPERATING ROOM #8**

Location: 11201 BENTON STREET, LOMA LINDA, CA 92357

Date: 03/30/2016 | Checked: MS | Drawn: TV

Project Number: 605-14-640

Building Number: 1

Drawing Number: **QH201**

Office of Construction and Facilities Management

Department of Veterans Affairs

VA FORM 08-6231

3/25/2016 7:35:38 PM C:\Users\msaquilayan\Documents\Autodesk\Revit 2013 Projects\046-16037-000_Central_msaquilayan.rvt

ABBREVIATIONS

AC	ALTERNATING CURRENT
AC	AIR CONDITIONER
AFF	ABOVE FINISHED FLOOR
AFG	ABOVE FINISHED GRADE
AIC	AMPERES INTERRUPTING CAPACITY SYMM
A	AMPERE
AMP	AMPERE
ANN	FIRE ALARM ANNUNCIATOR
ATS	AUTOMATIC TRANSFER SWITCH
AV	AUDIO/VISUAL
BATT	BATTERY
BLDG	BUILDING
BRKR	BREAKER
C	CONDUIT
CB	CIRCUIT BREAKER
CD	CANDELA
CFSD	COMBINATION FIRE SMOKE DAMPER
CIR	CIRCUIT
CKT	CIRCUIT
CO	CONDUIT ONLY WITH PULL ROPE
COM	COMMON
COMM	COMMUNICATION
CONN	CONNECT
CONT	CONTINUE
CT	CURRENT TRANSFORMER
CU	COPPER
DAA	DIGITAL AUDIO AMPLIFIERS
DB	DIRECT BURIED
DEF	DUAL ELEMENT FUSE
DISC	DISCONNECT
DN	DOWN
DPDT	DOUBLE-POLE DOUBLE-THROW
DPST	DOUBLE-POLE SINGLE-THROW
EM	EMERGENCY
EMT	ELECTRICAL METALLIC TUBING
EMY	EMERGENCY
ENCL	ENCLOSURE
EOL	END OF LINE
EQUIP	EQUIPMENT
EX	EXISTING
EXIST	EXISTING
F	FUSE
FACP	FIRE ALARM CONTROL PANEL
FLA	FULL LOAD AMPERES
FLEX	FLEXIBLE METALLIC TUBING
G	GROUND
GRD	GROUND
GND	GROUND
GFCI	GROUND FAULT CIRCUIT INTERRUPTER
HID	HIGH INTENSITY DISCHARGE
HOA	HAND-OFF-AUTO SWITCH
HP	HORSEPOWER
HZ	HERTZ
HPF	HIGH POWER FACTOR
IC	INTERRUPTING CAPACITY IN AMPS RMS
IG	ISOLATED GROUND
J	JUNCTION BOX
JB	JUNCTION BOX
J-BOX	JUNCTION BOX
K	KILO
KCMIL	THOUSAND CIRCULAR MILS
KVA	KILOVOLT-AMPERES
KW	KILOWATT
KWH	KILOWATT-HOUR
KVAR	KILOVAR
LCL	LONG CONTINUOUS LOAD
LRA	LOCKED ROTOR AMP
LTG	LIGHTING
LV	LOW VOLTAGE
M	MAGNETIC STARTER COIL
M	MOTOR
M	METER
MCC	MOTOR CONTROL CENTER
MCM	THOUSAND CIRCULAR MILS
MTG	MOUNTING
MTS	MANUAL TRANSFER SWITCH
N	NEUTRAL
NC	NORMALLY CLOSED
NEC	NATIONAL ELECTRIC CODE
NF	NONFUSED
NIC	NOT IN CONTRACT
NO	NORMALLY OPEN
NTS	NOT TO SCALE
2P	2 POLE, SIMILAR FOR OTHER QTY
PB	PULLBOX
PNL	PANEL
PT	POTENTIAL TRANSFORMER
PVC	POLYVINYL CHLORIDE
PWR	POWER
ø PH	PHASE
SCA	SHORT CIRCUIT AMPS
SQ FT	SQUARE FEET
SW	SWITCH
SWBD	SWITCHBOARD
SWGR	SWITCHGEAR
TC	TIME CLOCK
TEL	TELEPHONE
TEMP	TEMPORARY
XFMR	TRANSFORMER
TFMR	TRANSFORMER
TYP	TYPICAL
UG	UNDERGROUND
UON	UNLESS OTHERWISE NOTED
UPS	UNINTERRUPTIBLE POWER SYSTEM
VFD	VARIABLE FREQUENCY DRIVE
WP	WEATHERPROOF
WT	WATERTIGHT

SYMBOLS

CEILING WALL

POWER

JUNCTION BOX 4" SQUARE MINIMUM FOR WALL OR CEILING MOUNTED

JUNCTION BOX SIZE AS REQUIRED FOR NUMBER OF WIRES

GENERAL

CONDUIT DOWN

CONDUIT UP

CONDUIT RUN EXPOSED, PARALLEL WITH STRUCTURE

CONDUIT RUN UNDERGROUND OR BELOW FLOOR.

CONDUIT CONCEALED IN WALL OR CEILING.

SURFACE MOUNTED MISCELLANEOUS CABINET AS INDICATED ON PLANS

FLUSH MOUNTED MISCELLANEOUS CABINET AS INDICATED ON PLANS

EXISTING EQUIPMENT/RACEWAYS TO REMAIN

EXISTING EQUIPMENT/RACEWAYS TO BE REMOVED

NEW EQUIPMENT/RACEWAYS

SH1A ELECTRICAL EQUIPMENT DESIGNATED 'SH1A'

+4'-6" MOUNTING HEIGHT FROM FINISHED FLOOR TO CENTERLINE OF OUTLET OR EQUIPMENT

MH=4'-6" MOUNTING HEIGHT FROM FINISHED FLOOR TO BOTTOM OF OUTLET OR EQUIPMENT

REMODEL

TYPICAL SYMBOL DESIGNATION FOR:

EXISTING, DEVICES, FIXTURES AND EQUIPMENT TO REMAIN

EXISTING, DEVICES, FIXTURES AND EQUIPMENT TO BE REMOVED

NEW, DEVICES, FIXTURES AND EQUIPMENT

FIRE ALARM SYSTEM DEVICES

QUANTITY	SYMBOL	DESCRIPTION	MODEL	MANUFACTURER	BACKBOX	MOUNTING HEIGHT	C.S.F.M. NUMBER
EX	FACP	FIRE ALARM CONTROL PANEL	NFS2-640	EXISTING	EXISTING	EXISTING	EXISTING
13	P	AREA SMOKE DETECTOR (ADDRESSABLE - PHOTO)	FSP-851 B210LP	NOTIFIER	4S DEEP BOX W/ 3-0 RING	CEILING MOUNTED	7272-0028:0206 7300-1653:0109
1	P DC	AREA SMOKE DETECTOR (FOR DAMPER CONTROL)	FSP-851 B210LP	NOTIFIER	4S DEEP BOX W/ 3-0 RING	CEILING MOUNTED	7272-0028:0206 7300-1653:0109
2	15	FIRE ALARM CEILING STROBE	RSS-24MCCFW (WHITE)	WHEELOCK	4S DEEP BOX W/ 4S EXTENSION	CEILING MOUNTED	7125-0785:0141
2	30	FIRE ALARM CEILING STROBE	RSS-24MCCFW (WHITE)	WHEELOCK	4S DEEP BOX W/ 4S EXTENSION	CEILING MOUNTED	7125-0785:0141
2	15	FIRE ALARM CEILING SPEAKER/STROBE	E90-24MCCFW (WHITE)	WHEELOCK	4S DEEP BOX W/ 4S EXTENSION	CEILING MOUNTED	7125-0785:0152
3	30	FIRE ALARM CEILING SPEAKER/STROBE	E90-24MCCFW (WHITE)	WHEELOCK	4S DEEP BOX W/ 4S EXTENSION	CEILING MOUNTED	7125-0785:0152
2	75	FIRE ALARM CEILING SPEAKER/STROBE	E90-24MCCFW (WHITE)	WHEELOCK	4S DEEP BOX W/ 4S EXTENSION	CEILING MOUNTED	7125-0785:0152
1	CR	FIRE ALARM RELAY MODULE	FRM-1	NOTIFIER	4S DEEP BOX W/ 4S EXTENSION	VERIFY IN FIELD	7300-0028:0219
1	R	MULTI-VOLTAGE RELAY	PR-1	SYSTEM SENSOR	4S DEEP BOX W/ 4S EXTENSION	VERIFY IN FIELD	7300-1653:0172
EX	J	FIRE ALARM JUNCTION BOX	N/A	EXISTING	EXISTING	EXISTING	EXISTING
EX	FATC	FIRE ALARM TERMINAL CABINET	N/A	EXISTING	EXISTING	EXISTING	EXISTING

WIRE LEGEND

WIRE DESIGNATION	CONDUCTOR COLORS	WIRE IN CONDUIT
ADDRESS. LOOP Z	RED JACKET RED / BLACK	2 CONDUCTOR #16 FPL SOLID TWISTED/UNSHIELDED
DOOR HOLDER H	WHITE / BLACK	(2) #14 STRANDED TYPE THHN
AUD/VIS CKT. V	YELLOW / BLUE ORANGE / BROWN RED / BLACK PINK / PURPLE	(2) #12 STRANDED TYPE THHN
SPEAKER CKT. S	RED / BLACK	(2) #14 STRANDED TYPE THHN TWISTED

NOTES:
ALL SHIELDED CABLE MUST HAVE SHIELDS CONNECTED THROUGH AND LANDED AT PANEL.
ALL SQUARE INCH MEASUREMENTS ARE CROSS-SECTION AREA FOR CONDUIT FILLS

CONDUIT FILL CHART

DIMENSIONS OF INSULATED CONDUCTORS AND FIXTURE WIRES (BASED ON CHAPTER 9TABLE 5, 2013 CEC)

CONDUCTOR SIZE AWG	12 GA. THHN/THWN	14 GA. THHN/THWN	16 GA. TFN/TFFN	18 GA. TFN/TFFN
AREA (IN²)	0.0133	0.0097	0.0072	0.0055

TOTAL AREAS OF ELECTRICAL METALLIC TUBING (EMT) (BASED ON CHAPTER 9 TABLE 4, 2013 CEC)

		3/4" CONDUIT	1" CONDUIT	1 1/4" CONDUIT	1 1/2" CONDUIT	2" CONDUIT
TOTAL AREA		0.533 IN ^{2}	0.864 IN ^{2}	1.496 IN ^{2}	2.036 IN ^{2}	3.356 IN ^{2}
40% FILL		0.213 IN ^{2}	0.346 IN ^{2}	0.598 IN ^{2}	0.814 IN ^{2}	1.342 IN ^{2}

MAXIMUM NUMBER OF CONDUCTORS OR FIXTURE IN ELECTRICAL METALLIC TUBING (EMT) (BASED CHAPTER 9, TABLE C.1 2013 CEC)

CONDUCTOR SIZE AWG		3/4" CONDUIT	1" CONDUIT	1 1/4" CONDUIT	1 1/2" CONDUIT	2" CONDUIT
18 TFN/TFFN		36	62	108	148	244
16 TFN/TFFN		29	48	83	113	186
14 THHN/THWN		22	35	61	84	138
12 THHN/THWN		16	26	45	61	101

GENERAL NOTES

1. IT IS THE INTENT OF THESE PLANS AND SPECIFICATIONS THAT A COMPLETE AND FUNCTIONAL FIRE ALARM INSTALLATION BE PROVIDED. TOWARD THIS END, FURNISH ALL LABOR AND TOOLS NECESSARY AND INSTALL ALL APPARATUS, MATERIALS, AND EQUIPMENT IN COMPLIANCE WITH DRAWING, SPECIFICATION AND ALL APPLICABLE CODES. ITEMS REQUIRED BUT NOT NORMALLY SHOWN, SUCH AS COUPLINGS, HANGERS, BRACKETS, CLAMPS, BOXES, CONNECTORS AND HARDWARE.
2. SEE SPECIFICATIONS FOR THE COMPLETE DESCRIPTION AND REQUIREMENTS.
3. INSTALL WIRING IN CONDUIT, MINIMUM 3/4" EMT U.O.N. CONDUIT RUNS AS SHOWN ARE DIAGRAMMATIC. EXACT LOCATION SHALL BE DETERMINED IN THE FIELD TO SUIT.
4. BOXES OR CABINETS PENETRATING FIRE RATED WALLS OR CEILINGS SHALL BE SEALED AT BACK OF BOXES OR CABINETS WITH APPROVED FIRE STOP MATERIAL TO MAINTAIN THE INTEGRITY OF THE FIRE RATING.
5. ALL CONDUCTORS SHALL BE COPPER, TYPE 'THWN/THHN' 90 DEGREE INSULATION. ALL LUGS SHALL BE 75 DEGREE RATED, MINIMUM.
6. WIRE SPLICING IN ANY UNDERGROUND OR BUILDING EXTERIOR PULLBOX IS NOT ALLOWED, ALL TERMINATION'S SHALL BE DONE IN TERMINAL CABINETS, OR ON EQUIPMENT TERMINALS.
7. ALL NEW OUTDOOR PULLBOXES SHALL BE MINIMUM OF 18"x18"x6", CIRCLE AW NEMA 3R SCREW COVER WITHOUT KNOCKOUTS UNLESS OTHERWISE NOTED.
8. ALL INTERIOR TERMINAL CABINETS SHALL BE CIRCLE AW TCS/TCF SERIES WITH TUMBLER LOCK AND KEY.
9. PROVIDE TERMINAL BLOCKS, TYPE AND QUANTITY TO SUIT WITH 30% SPARE CAPACITY IN EACH FIRE ALARM CONTROL PANEL AND TERMINAL CABINET.
10. UPON COMPLETION OF THE SYSTEM INSTALLATION, THE ENTIRE SYSTEM SHALL BE TESTED IN THE PRESENCE OF AND IN A MANNER ACCEPTABLE TO VA.
11. PROVIDE NECESSARY HARDWARE FOR ONE SPARE ADDRESSABLE LOOP IN THE FIRE ALARM PANEL.
12. DRAWINGS REPRESENT THE DESIGN OF A NEW AUTOMATIC ADDRESSABLE FIRE ALARM SYSTEM.
13. ALL FIRE ALARM EQUIPMENT SHALL BE U.L. APPROVED AND LISTED BY CALIFORNIA STATE FIRE MARSHAL WHERE APPLICABLE.
14. FIRE ALARM SYSTEM SHALL BE PROVIDED WITH AUTOMATIC OPERATION OF BATTERY CHARGING AND RE-CHARGING. RECHARGING RATE SHALL REACH 70% IN 12 HRS.
15. DEVICES MOUNTED OUTSIDE OF BUILDING SHALL BE W.P. WITH WEATHER PROOF BACK BOX AND GASKET.
16. QUANTITIES/SIZE SHOWN FOR CONTROL PANEL MODULES AND BATTERIES REFLECT THE MINIMUM DISIGN LOAD CALCULATION. HOWEVER, CONTRACTOR IS REQUIRED TO SUBMIT SHOP DRAWINGS SHOWING THE CALCULATED BATTERY SIZE FOR THE FINAL QUANTITY OF MODULES. ALL SUCH RELATED COSTS SHALL BE INCLUDED IN THE BID AND AT NO ADDITIONAL COSTS TO THE OWNER.
17. PANELS SHALL BE NO HIGHER THAN 6 FEET AND SYSTEM STATUS DISPLAYS ARE TO BE AT EYE LEVEL (+60" AFF). NO EQUIPMENT OR RACEWAY MAY BE LOCATED UNDER A CABINET CONTAINING BATTERIES.
18. THE FIRE ALARM SYSTEM SHALL PASS TESTS REQUIRED BY LOCAL FIRE DEPARTMENTS, INCLUDING CHIEF'S REGULATION NO. 4 PROGRAM REQUIRED BY "CITY LOS ANGELES FIRE DEPARTMENT" AND ADMINISTERED BY LAUSD.
19. CONTRACTOR SHALL FURNISH AND INSTALL A COMPLETE FIRE ALARM SYSTEM, INCLUDING BUT NOT LIMITED TO WIRING, CONDUITS AND DEVICES REQUIRED FOR A SATISFACTORY OPERATION OF THE SYSTEM.

APPLICABLE CODES:

- NEC 2014
- NFPA 72 2016
- NFPA 101 2015
- IBC 2015

CONSTRUCTION PHASING

A. THE DEMOLITION AND NEW CONSTRUCTION WORK ARE DIVIDED INTO (5) PHASES. REFER TO LAD ARCHITECTURAL PLANS G100B AND G100BA FOR DETAILS.

B. DURING THE CONSTRUCTION PHASING PROCESS, THIS CONTRACTOR IS TO PROVIDE AND INSTALL TEMPORARY WIRING AS REQUIRED, IN PROJECT AREA ADJACENT TO DEMOLITION WORK, TO MAINTAIN THE EXISTING INITIATING DEVICES AND NOTIFICATION APPLIANCES IN NORMAL OPERATION.

CONSTRUCTION DOCUMENTS
FULLY SPRINKLERED

No.	Description	Date
1	SCHEMATIC DESIGN (SD)	10/20/2015
2	DESIGN DEVELOPMENT (DD)	01/18/2016
3	CONSTRUCTION DOCUMENTS (CD)	03/30/2016

VA FORM 08-6231

CONSULTANTS:
(SEE PROJECT TEAM DIRECTORY ON G1000 COVER SHEET)

KOCHER SCHIRRA GOHARIZI
Consulting Engineers, Inc.
111 N JACKSON SUITE 121 GLENDALE CA 91206-4371
PHONE: 818.240.5630 FAX: 818.240.5144

Seals and Signatures

REGISTERED PROFESSIONAL ENGINEER
RAZMIK MATHEVOSIAN
No. E-17015
9/30/2017
ELECTRICAL
STATE OF CALIFORNIA

ARCHITECTS/ENGINEERS:

LEO A DALY
PLANNING
ARCHITECTURE
ENGINEERING
INTERIORS
550 South Hope Street, 27 th Floor
Los Angeles, California 90071, USA
213-629-0100 F213-629-0070
EST. 1915

Drawing Title: FIRE ALARM SYSTEM LEGEND AND GENERAL NOTES

Approved: Project Director

Project Title: CONSTRUCT OPERATING ROOM #8

Location: 11201 BENTON STREET LOMA LINDA, CA 92357

Date: 03/30/2016 | Checked: TC | Drawn: JR

Project Number: 605-14-640

Building Number: 1

Drawing Number: FA001

Office of Construction and Facilities Management

Department of Veterans Affairs

SCALE: 1/4"=1'-0"

SHEET NOTES

1. EXISTING FIRE ALARM DEVICES TO REMAIN.
2. DISCONNECT AND REMOVE FIRE ALARM DEVICE. REMOVE RELATED WIRING AND CONDUITS TO THE NEXT DEVICE TO STAY.
3. REFER TO CONSTRUCTION PHASING NOTES, SHEET FA001 FOR MORE WORK.
4. DOOR HOLD-OPEN DEVICE.

KEY PLAN

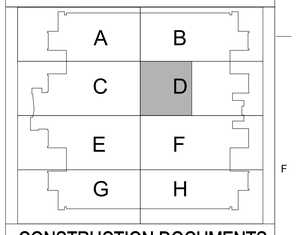

CONSTRUCTION DOCUMENTS
FULLY SPRINKLERED

No.	Description	Date
1	SCHEMATIC DESIGN (SD)	10/20/2015
2	DESIGN DEVELOPMENT (DD)	01/18/2016
3	CONSTRUCTION DOCUMENTS (CD)	03/30/2016

CONSULTANTS:

(SEE PROJECT TEAM DIRECTORY ON GI000 COVER SHEET)

KOCHER SCHIRRA GOHARIZI
Consulting Engineers, Inc.
111 N. JACKSON SUITE 121 GLENDALE CA 91206-4371
PHONE: 818.240.5630 FAX: 818.240.5144

Seals and Signatures

REGISTERED PROFESSIONAL ENGINEER
RAZMIK MATHEVOSIAN
No. E-17015
9/30/2017
ELECTRICAL
STATE OF CALIFORNIA

ARCHITECTS/ENGINEERS:

LEO A DALY
PLANNING
ARCHITECTURE
ENGINEERING
INTERIORS
550 South Hope Street, 27 th Floor
Los Angeles, California 90071, USA
213-629-0100 F213-629-0070
EST. 1915

Drawing Title
FIRE ALARM SYSTEM DEMOLITION PLAN

Approved: Project Director

Project Title
CONSTRUCT OPERATING ROOM #8

Location
11201 BENTON STREET
LOMA LINDA, CA 92357

Date	Checked	Drawn
03/30/2016	TC	JR

Project Number
605-14-640

Building Number
1

Drawing Number
FAD101

Office of Construction and Facilities Management

Department of Veterans Affairs

VA FORM 08-6231

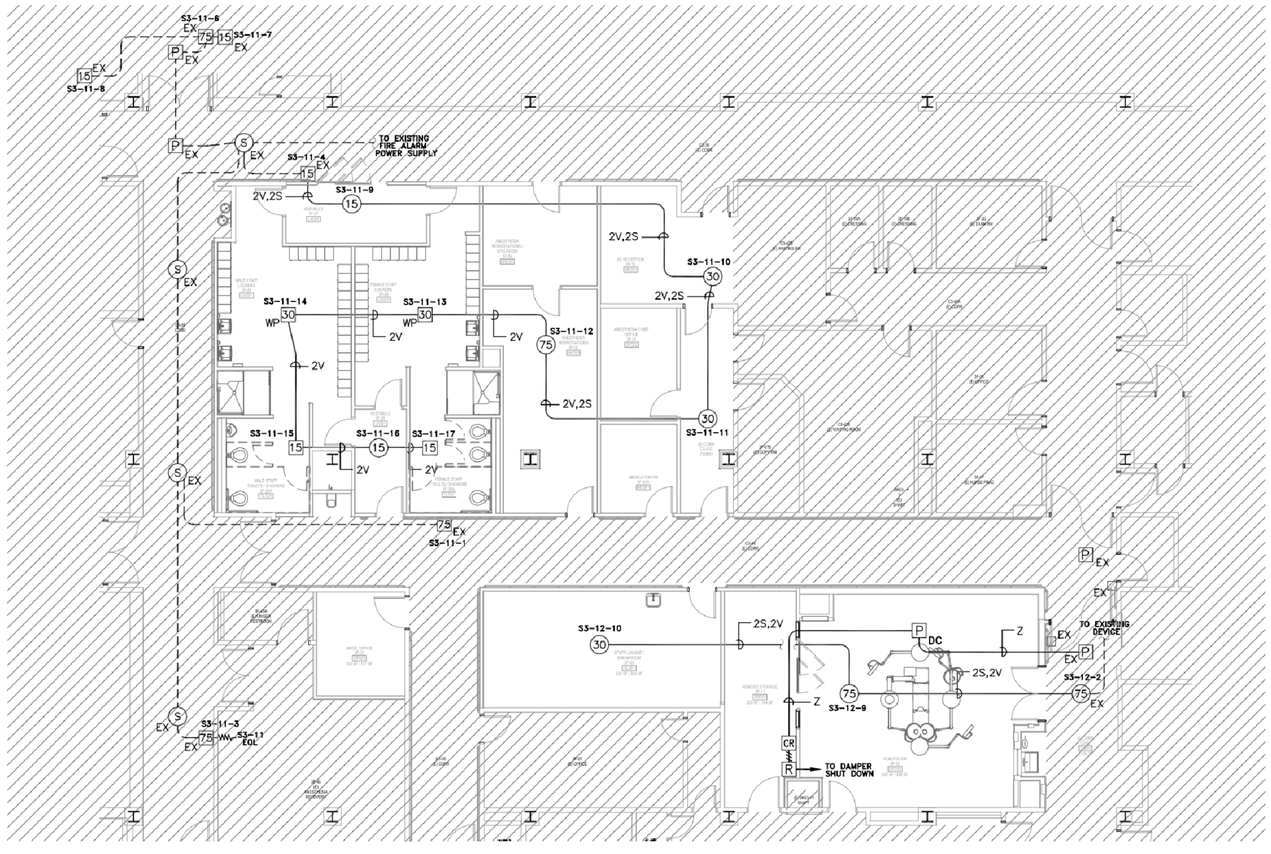

SHEET NOTES

KEY PLAN

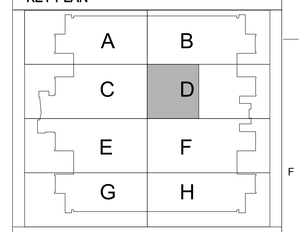

CONSTRUCTION DOCUMENTS
FULLY SPRINKLERED

SCALE: 1/8"=1'-0"

No.	Description	Date
1	SCHEMATIC DESIGN (SD)	10/20/2015
2	DESIGN DEVELOPMENT (DD)	01/18/2016
3	CONSTRUCTION DOCUMENTS (CD)	03/30/2016

CONSULTANTS:

(SEE PROJECT TEAM DIRECTORY ON GI000 COVER SHEET)

KOCHER SCHIRRA GOHARIZI
Consulting Engineers, Inc.
111 N. JACKSON SUITE 121 GLENDALE CA 91206-4371
PHONE: 818.240.5630 FAX: 818.240.5144

Seals and Signatures

REGISTERED PROFESSIONAL ENGINEER
RAZMIK MATHEVOSIAN
No. E-17015
9/30/2017
ELECTRICAL
STATE OF CALIFORNIA

ARCHITECTS/ENGINEERS:

LEO A DALY
PLANNING
ARCHITECTURE
ENGINEERING
INTERIORS
550 South Hope Street, 27 th Floor
Los Angeles, California 90071, USA
213-629-0100 F213-629-0070
EST. 1915

Drawing Title
FIRE ALARM SYSTEM PLAN

Approved: Project Director

Project Title
CONSTRUCT OPERATING ROOM #8

Location
11201 BENTON STREET
LOMA LINDA, CA 92357

Date	Checked	Drawn
03/30/2016	TC	JR

Project Number
605-14-640

Building Number
1

Drawing Number
FA101

Office of Construction and Facilities Management

Department of Veterans Affairs

VA FORM 08-6231

SHEET NOTES

1. EXISTING AUDIO AMPLIFIER. NOTIFIER #DAA-5070. FOR SPEAKER ZONE 2-4-4 MASS NOTIFICATION OF FIRE AND EMERGENCY AND SPEAKER ZONE 2-4-4 FIRE AND EMERGENCY PAGING ONLY.
2. REFER TO SHEET FAD101 FOR FIRE ALARM SYSTEM DEMOLITION PLAN.
3. REFER TO SHEET FA101 FOR FIRE ALARM SYSTEM PLAN.

KEY PLAN

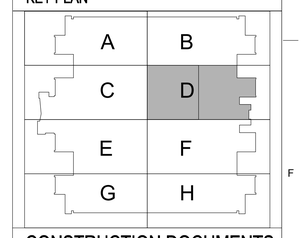

CONSTRUCTION DOCUMENTS
FULLY SPRINKLERED

N

SCALE: 1/8"=1'-0"

No.	Description	Date
1	SCHEMATIC DESIGN (SD)	10/20/2015
2	DESIGN DEVELOPMENT (DD)	01/18/2016
3	CONSTRUCTION DOCUMENTS (CD)	03/30/2016

VA FORM 08-6231

CONSULTANTS:

(SEE PROJECT TEAM DIRECTORY ON GI000 COVER SHEET)

KOCHER SCHIRRA GOHARIZI
Consulting Engineers, Inc.
111 N JACKSON SUITE 121 GLENDALE CA 91206-4371
PHONE: 818.240.5630 FAX: 818.240.5144

Seals and Signatures

REGISTERED PROFESSIONAL ENGINEER
ROZANIK MATHEOSSIAN
No. E-17015
9/30/2017
ELECTRICAL
STATE OF CALIFORNIA

ARCHITECTS/ENGINEERS:

LEO A DALY
PLANNING
ARCHITECTURE
ENGINEERING
INTERIORS
550 South Hope Street, 27 th Floor
Los Angeles, California 90071, USA
213-629-0100 F213-629-0070
EST. 1915

Drawing Title
FIRE ALARM SYSTEM
PARTIAL 3RD FLOOR PLAN

Approved: Project Director

Project Title
CONSTRUCT OPERATING ROOM #8

Location
11201 BENTON STREET
LOMA LINDA, CA 92357

Date 03/30/2016 | Checked TC | Drawn JR

Project Number 605-14-640

Building Number 1

Drawing Number **FA102**

Office of Construction and Facilities Management

Department of Veterans Affairs

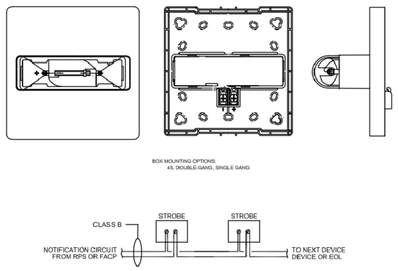

STROBE DEVICE DETAIL — NTS — B1

AREA OF WORK

VOLTAGE DROP CALCULATION — 03/14/

LOMA LINDA HEALTH CARE
FCPS-2456 THIRD FLOOR SERVICE BAY #4

WHEELOCK	DEVICE CURR. (AMPS)	SIGNAL CIRCUIT 53-9 QTY	CURR.	SIGNAL CIRCUIT 53-10 QTY	CURR.	SIGNAL CIRCUIT 53-11 QTY	CURR.	SIGNAL CIRCUIT 53-12 QTY	CURR.	QTY TOTAL
Speaker/Strobe (Strobe ONLY)										
E90-24MCC (15cd)	0.065		0.000		0.000		0.000	1	0.065	1
E90-24MCC (30cd)	0.105		0.000		0.000	1	0.105	2	0.210	3
E90-24MCC (75cd)	0.189		0.000		0.000	1	0.189	1	0.189	2
Strobe										
RSS-24MCW (15cd)	0.060	7	0.420	9	0.540	4	0.240	5	0.300	25
RSS-24MCW (30cd)	0.092		0.000		0.000		0.000	2	0.184	2
RSS-24MCW (75cd)	0.165		0.000		0.000	5	0.825	3	0.495	8
TOTAL CURRENT ON CIRCUIT		0.420 AMPS		0.540 AMPS		1.359 AMPS		1.443 AMPS		
TOTAL WIRE LENGTH		847 FT.		720 FT.		750 FT.		750 FT.		
WIRE SIZE		12 AWG		12 AWG		12 AWG		12 AWG		
CIRCULAR MILS		6530 CIRC MILS		6530 CIRC MILS		6530 CIRC MILS		6530 CIRC MILS		
VOLTAGE DROP		1.18 VOLTS		1.29 VOLTS		3.37 VOLTS		3.58 VOLTS		
VOLTAGE @ END OF CIRCUIT		19.22 VOLTS		19.11 VOLTS		17.03 VOLTS		16.82 VOLTS		
CIRCUIT LOCATION										

VOLTAGE DROP = (TOTAL CURRENT x DISTANCE x 21.6) / CIRCULAR MILS

CIRC. MILS
18 AWG = 1620
16 AWG = 2580
14 AWG = 4110
12 AWG = 6530

OLTAGE @ END = STARTING CIRCUIT VOLTAGE - VOLTAGE DROP OF CIRCUIT

LISTED CIRCUIT VOLTAGE = 24V
STARTING CIRCUIT VOLTAGE = 20.4V (85% LISTED VOLTAGE)
OPERATING VOLTAGE RANGE FOR 24V NOTIFICATION APPLIANCES TO BE 16V-33V

BATTERY SIZING CALCULATION — 03/14/16

LOMA LINDA HEALTH CARE
DAA-5070 ZONE 2-4-4 SERVICE BAY#4 3RD FLOOR

Quantity	Device Type	Model Number	Standby Current	Total Standby Current	Alarm Current	Total Alarm Current
1	Voice	DAA-5070	0.35000	0.35000	0.60000	0.60000
* 20	Speaker 70V	Speaker - 1/2 Watt Tap	0.04000	0.80000	0.04000	0.80000
1	Speaker 70V	Speaker - 1 Watt Tap	0.08000	0.08000	0.08000	0.08000

	Standby Load	Alarm Load
***BUILDING PROVIDED WITH ENGINE-DRIVEN GENERATOR WITH 24HR STANDBY PER NFPA 72, 10.5.6.1.1	1.230	1.480

*DENOTES QUANTITIES AFFECTED BY THIS SCOPE

Standby Load: 1.230 Amps
Standby Time: 4 Hours
Total Standby Load: 4.92 Amp*Hours

Alarm Load: 1.480 Amps
Alarm Time: 15 Minutes
Total Alarm Load: 0.37 Amp*Hours

Batteries Provided: (2) BAT-12120
Battery Size: 12.00 A.H.

Standby Load	4.92 A.H.
Alarm Load +	0.37 A.H.
Load(STBY+ALM)	5.29 A.H.
Multiply by safety factor x	1.20
Load with 20% safety factor	6.35 A.H.
Available Battery:	**12.00** A.H.
Load w/ safety factor) -	**6.35** A.H.
Spare Capacity	**5.65** A.H.
120VAC MAX Load	**4.50** Amps

BATTERY SIZING CALCULATION — 03/14/16

LOMA LINDA HEALTH CARE
EXISTING POWER SUPPLY THIRD FLOOR SERVICE BAY #6

Quantity	Device Type	Model Number	Standby Current	Total Standby Current	Alarm Current	Total Alarm Current
1	FCPS-2456	FCPS-2456	0.06500	0.06500	0.14500	0.14500
* 2	S/S (Strobe ONLY)	E90-24MCC (15cd)	0.00000	0.00000	0.06500	0.13000
* 3	S/S (Strobe ONLY)	E90-24MCC (30cd)	0.00000	0.00000	0.10500	0.31500
* 2	S/S (Strobe ONLY)	E90-24MCC (75cd)	0.00000	0.00000	0.18900	0.37800
* 5	Strobe	RSS-24MCC (15cd)	0.00000	0.00000	0.06500	0.32500
* 2	Strobe	RSS-24MCC (30cd)	0.00000	0.00000	0.10500	0.21000
29	Strobe	RSS-24MCC (75cd)	0.00000	0.00000	0.18900	5.48100

	Standby Load	Alarm Load
***BUILDING PROVIDED WITH ENGINE-DRIVEN GENERATOR WITH 24HR STANDBY PER NFPA 72, 10.5.6.1.1	0.065	6.984

*DENOTES QUANTITIES AFFECTED BY THIS SCOPE

Standby Load: 0.065 Amps
Standby Time: 4 Hours
Total Standby Load: 0.26 Amp*Hours

Alarm Load: 6.984 Amps
Alarm Time: 15 Minutes
Total Alarm Load: 1.75 Amp*Hours

Batteries Provided: (2) BAT-1270
Battery Size: 7.00 A.H.

Standby Load	0.26 A.H.
Alarm Load +	1.75 A.H.
Load(STBY+ALM)	2.01 A.H.
Multiply by safety factor x	1.20
Load with 20% safety factor	2.41 A.H.
Available Battery:	**7.00** A.H.
Load w/ safety factor) -	**2.41** A.H.
Spare Capacity	**4.59** A.H.
120VAC MAX Load	**3.20** Amps

BATTERY AND VOLTAGE DROP CALCULATIONS — NTS — B3

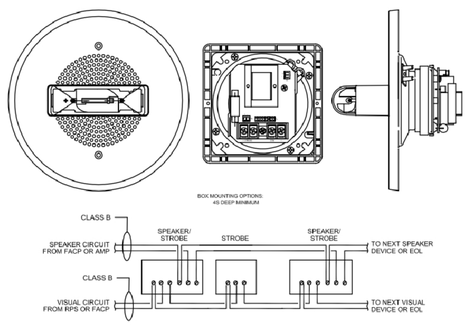

CEILIING MOUNT DEVICE DETAIL — NTS — D1

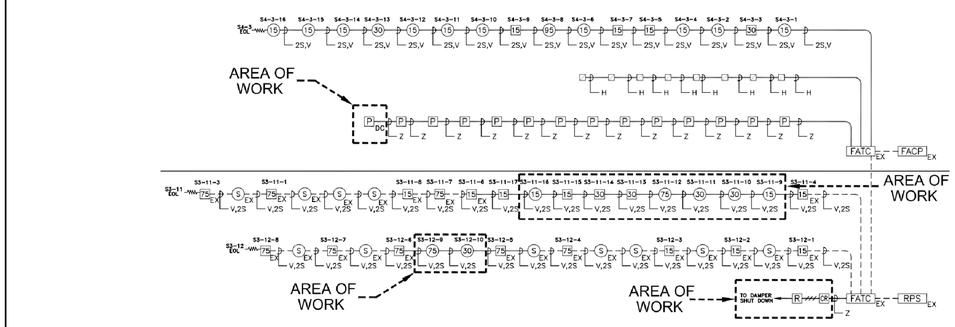

RISER DIAGRAM — NTS — D4

NOTES:

1. ALL WALL-MOUNTED VISUAL SIGNALING APPLIANCES SHALL BE MOUNTED SUCH THAT THE ENTIRE BOTTOM LENS IS NOT LESS THAN 80 IN. AND TOP OF LENS IS NOT GREATER THAN 96 IN. ABOVE THE FINISHED FLOOR (A.F.F.) PER NFPA 72.

   ALL WALL MOUNTED AUDIBLE DEVICES SHALL BE A MINIMUM OF 60 IN. A.F.F. TO TOP OF DEVICE PER NFPA 72.
   AREAS HAVING MORE THAN 2 STROBES IN THE FIELD OF VIEW SHALL BE SYNCHRONIZED PER NFPA 72.

2. MANUAL STATION SHALL BE INSTALLED AT 48" CENTER OR THE BOX ABOVE FINISHED FLOOR.

3. WEATHERPROOF HORN/STROBE SHALL BE WALL MOUNTED A MINIMUM OF 90" ABOVE FLOOR OR 6" MINIMUM BELOW THE CEILING, WHICHEVER IS LOWER. MEASUREMENTS ARE TO BE TAKEN FROM THE HIGHEST PORTION OF THE HORN.

4. PER NFPA 72, SPOT-TYPE SMOKE DETECTORS SHALL BE LOCATED ON THE CEILING OR, IF ON A SIDEWALL, BETWEEN THE CEILING AND 12 in (300mm) DOWN FROM THE CEILING TO THE TOP OF THE DETECTOR.

5. PER NFPA 72, SPOT-TYPE HEAT-SENSING FIRE DETECTORS SHALL BE LOCATED ON THE CEILING NOT LESS THAN 4 in. (100 mm) FROM THE SIDEWALL OR ON THE SIDEWALLS BETWEEN THE 4 in AND 12 in (100 mm AND 300mm) FROM THE CEILING.

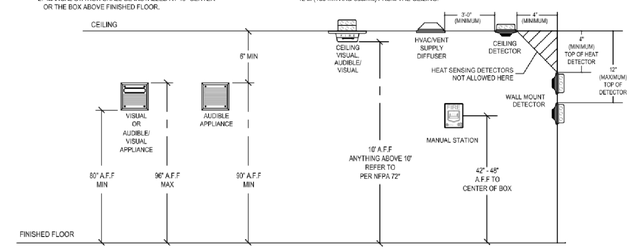

* DE-RATED STROBES SHALL MEET THE REQUIREMENTS OF NFPA 72. "PERFORMANCE - BASED ALTERNATIVE".

CODE-BASED LOCATION REQUIREMENTS - SEE SYMBOLS LIST FOR PROJECT MOUNTING HEIGHT

DEVICE MOUNTING ELEVATION DETAILS — NTS — D7

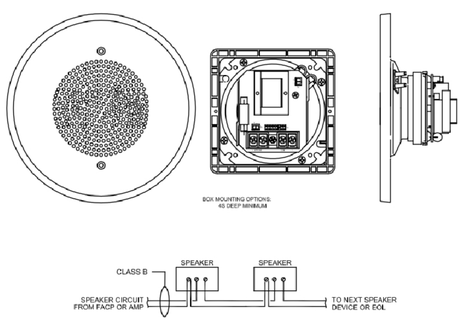

CEILING SPEAKER DEVICE DETAIL — NTS — F1

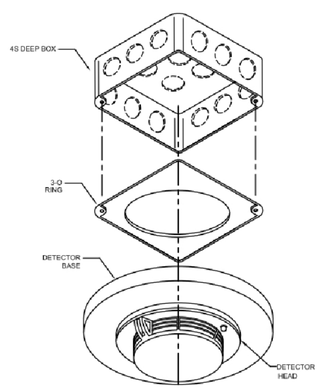

4S DEEP BOX & O-RING DETECTOR MOUNTING — NTS — F3

- NTS E5
- NTS E6
- NTS E7
- NTS E8
- NTS E9
- NTS F5
- NTS F6
- NTS F7
- NTS F8
- NTS F9

CONSTRUCTION DOCUMENTS
FULLY SPRINKLERED

No.	Description	Date
1	SCHEMATIC DESIGN (SD)	10/20/2015
2	DESIGN DEVELOPMENT (DD)	01/18/2016
3	CONSTRUCTION DOCUMENTS (CD)	03/30/2016

VA FORM 08-6231

CONSULTANTS:

(SEE PROJECT TEAM DIRECTORY ON GI000 COVER SHEET)

KOCHER SCHIRRA GOHARIZI
Consulting Engineers, Inc.
111 N JACKSON SUITE 121 GLENDALE CA 91206-4371
PHONE: 818.240.5630 FAX: 818.240.5144

Seals and Signatures

REGISTERED PROFESSIONAL ENGINEER — NAZIK K. MATHEOSYAN — No. E-17015 — 9/30/2017 — ELECTRICAL — STATE OF CALIFORNIA

ARCHITECTS/ENGINEERS:

LEO A DALY
PLANNING ARCHITECTURE ENGINEERING INTERIORS
550 South Hope Street, 27 th Floor
Los Angeles, California 90071, USA
213-629-0100 F213-629-0070
EST. 1915

Drawing Title: **FIRE ALARM SYSTEM RISER DIAGRAM SCHEDULES & DETAILS**

Approved: Project Director

Project Title: **CONSTRUCT OPERATING ROOM #8**

Project Number: 605-14-640

Building Number: 1

Location: 11201 BENTON STREET, LOMA LINDA, CA 92357

Date: 03/30/2016 | Checked: TC | Drawn: JR

Drawing Number: **FA201**

Office of Construction and Facilities Management

Department of Veterans Affairs

ACTION \ DEVICE	MANUAL PULL STATION	FA SYSTEM SMOKE DETECTOR	FA SYSTEM SMOKE DETECTOR WITH SOUNDER BASE	AREA HEAT DETECTOR	DUCT SMOKE DETECTOR	ELEVATOR SMOKE DETECTOR 1ST FLOOR ELEV. LOBBY	ELEVATOR SHAFT MACHINE RM, OTHER LOBBY FLR. SMOKE DETECTOR	ELEVATOR SHAFT MACHINE RM. HEAT DETECTOR	ANSUL HOOD EXTINGUSHING SYSTEM	SPRINKLER WATER FLOW SWITCH	SPRINKLER VALVE TAMPER SWITCH	PIV TAMPER	24 VDC POWER MONITOR	FIRE PUMP RUNNING	FIRE PUMP POWER FAILURE	FIRE PUMP POWER PHASE REVERSAL	NAC EXTENDER POWER SUPPLY	VOICE EVAC DVC DAA MONITOR	FACP 120 VAC POWER FAILURE	AUXILIARY BUILDINGS LOCAL FIRE ALARM SYSTEM	120 VAC RESIDENTAL ROOM SMOKE DETECTOR
ANNUNCIATE AT FIRE CONTROL PANEL	YES	YES	NO	YES	NO	YES	YES	YES	YES	YES	NO	NO	NO	NO	NO	NO	NO	NO	NO	YES	NO
ANNUNCIATE ALARM AT FOUR REMOTE ANNUNCIATORS	YES	YES	NO	YES	NO	YES	YES	YES	YES	YES	NO	NO	NO	NO	NO	NO	NO	NO	NO	YES	NO
ANNUNCIATE ALARM AT PBX & GRAPHICS CONTROL ROOM	YES	YES	NO	YES	NO	YES	YES	YES	YES	YES	NO	NO	NO	NO	NO	NO	NO	NO	NO	YES	NO
ANNUNCIATE TROUBLE AT FACP REMOTE ANNUNCIATORS PBX & GRAPHICS CONTROL ROOM	ON FAULT	ON FAULT	ON FAULT	ON FAULT	ON FAULT	ON FAULT	ON FAULT	ON FAULT	ON FAULT	ON FAULT	ON FAULT	ON FAULT	ON FAULT	ON FAULT	ON FAULT	ON FAULT	ON FAULT	ON FAULT	ON FAULT	ON FAULT	NO
ANNUNCIATE SUPERVISORY AT FACP'S REMOTE ANNUNCIATORS PBX & GRAPHICS CONTROL ROOM	NO	NO	YES	NO	YES	NO	NO	NO	NO	NO	YES	YES	YES	YES	YES	YES	YES	YES	YES	YES	NO
ACTIVATE SPEAKERS AUDIBLE ON FLOOR OF ALARM, FLOOR ABOVE, FLOOR BELOW & ALL INTERSTITIAL SPACES	YES	YES	NO	YES	NO	YES	YES	YES	YES	YES	NO	NO	NO	NO	NO	NO	NO	NO	NO	NO	NO
ACTIVATE VISUAL STROBES ON THE FLOOR OF ALARM	YES	YES	NO	YES	NO	YES	YES	YES	YES	YES	NO	NO	NO	NO	NO	NO	NO	NO	NO	NO	NO
ACTIVATE INCANDESCENT FIRE LIGHTS ON FLOOR OF ALARM	YES	YES	NO	YES	NO	YES	YES	YES	NO	YES	NO	NO	NO	NO	NO	NO	NO	NO	NO	NO	NO
RELEASE MAGNETIC DOOR HOLDERS ON FLOOR OF ALARM	YES	YES	NO	YES	NO	YES	YES	YES	YES	YES	NO	NO	NO	NO	NO	NO	NO	NO	NO	NO	NO
ACTIVATE LOCAL SOUNDER BASE OF SD IN SLEEPING ROOM	NO	NO	YES	NO	NO	NO	NO	NO	NO	NO	NO	NO	NO	NO	NO	NO	NO	NO	NO	NO	NO
ACTIVATE EXISTING NFPA 13 WATER FLOW BELL	NO	NO	NO	NO	NO	NO	NO	NO	NO	YES	NO	NO	NO	NO	NO	NO	NO	NO	NO	NO	NO
RECALL ELEVATORS TO FIRST FLOOR-PRIMARY RECALL FLR	NO	NO	NO	NO	NO	NO	YES	NO	NO	NO	NO	NO	NO	NO	NO	NO	NO	NO	NO	NO	NO
RECALL ELEVATORS TO SECONDARY RECALL FLOOR	NO	NO	NO	NO	NO	YES	NO	NO	NO	NO	NO	NO	NO	NO	NO	NO	NO	NO	NO	NO	NO
SHUNT TRIP ELEVATOR POWER AFTER ELEVATOR RETURN DELAY	NO	NO	NO	NO	NO	NO	NO	YES	NO	NO	NO	NO	NO	NO	NO	NO	NO	NO	NO	NO	NO
CLOSE ASSOCIATED DAMPER/ HVAC UNIT	NO	NO	NO	NO	YES	NO	NO	NO	NO	NO	NO	NO	NO	NO	NO	NO	NO	NO	NO	NO	NO
CLOSE SMOKE ZONE DAMPER/ SHUT DOWN ZONE HVAC UNIT	YES	YES	NO	NO	YES	YES	YES	NO	NO	YES	NO	NO	NO	NO	NO	NO	NO	NO	NO	NO	NO
ACTIVATE RESIDENTIAL ROOM 120VAC AUDIBLE SOUNDER	NO	NO	NO	NO	NO	NO	NO	NO	NO	NO	NO	NO	NO	NO	NO	NO	NO	NO	NO	NO	YES
REPORT FIRE ALARM STATUS TO CENTRAL STATION MONITORING	YES	YES	YES	YES	YES	YES	YES	YES	YES	YES	YES	YES	YES	YES	YES	YES	YES	YES	YES	YES	NO

CONSTRUCTION DOCUMENTS
FULLY SPRINKLERED

No.	Description	Date
1	SCHEMATIC DESIGN (SD)	10/20/2015
2	DESIGN DEVELOPMENT (DD)	01/18/2016
3	CONSTRUCTION DOCUMENTS (CD)	03/30/2016

CONSULTANTS:

(SEE PROJECT TEAM DIRECTORY ON GI000 COVER SHEET)

KOCHER SCHIRRA GOHARIZI Consulting Engineers, Inc.
111 N JACKSON SUITE 121 GLENDALE CA 91206-4371
PHONE: 818.240.5630 FAX: 818.240.5144

Seals and Signatures

REGISTERED PROFESSIONAL ENGINEER RAZAN K. MATHEWOS YAN No. E-17015 9/30/2017 ELECTRICAL STATE OF CALIFORNIA

ARCHITECTS/ENGINEERS:

LEO A DALY
PLANNING ARCHITECTURE ENGINEERING INTERIORS
550 South Hope Street, 27 th Floor
Los Angeles, California 90071, USA
213-629-0100 F213-629-0070
EST. 1915

Drawing Title: **SEQUENCE OF OPERATIONS**

Approved: Project Director

Project Title: **CONSTRUCT OPERATING ROOM #8**

Location: 11201 BENTON STREET LOMA LINDA, CA 92357

Date: 03/30/2016 | Checked: TC | Drawn: JR

Project Number: 605-14-640

Building Number: 1

Drawing Number: **FA301**

Office of Construction and Facilities Management

Department of Veterans Affairs

VA FORM 08-6231

FIRE SPRINKLER GENERAL NOTES

A. CONTRACTOR SHALL DESIGN, FURNISH AND INSTALL COMPLETE AUTOMATIC SPRINKLER FIRE PROTECTION SYSTEMS AS SPECIFIED AND AS FOLLOWS:

1. PROVIDE WET PIPE AUTOMATIC SPRINKLER SYSTEM FOR ENTIRE REMODEL AREA.

2. CEILING GRID SYSTEM WHERE IT OCCURS SHALL BE THE BASIS FOR SPRINKLER LOCATION. SPRINKLER SHALL BE AS SYMMETRICAL AS POSSIBLE WITH THE GRID SYSTEM.

3. WHERE PROPOSED SPRINKLER LOCATIONS INTERFERE WITH NEW OR EXISTING DUCTWORK LIGHT FIXTURES, DIFFUSERS OR REGISTERS, THE LIGHT, DIFFUSER OR REGISTER LOCATION SHALL GOVERN AND ADDITIONAL SPRINKLERS SHALL BE PROVIDED IN AREA WHERE LAKE OF SPRINKLER WILL ACCRUE.

4. SPACING AND DETAIL FOR HANGERS, SUPPORTS AND BRACING OF PIPING SHALL COMPLY WITH THE LATEST EDITION OF NFPA 13. PROVIDE CALCULATION SIGNED BY LICENSED STRUCTURAL ENGINEER AND SHOW DETAIL FOR SUPPORTS, BRACING MEMBERS AND CONNECTIONS NOT COVERED BY NFPA.

5. ALL FIRE ALARM DEVICES INCLUDING FLOW SWITCHES, ALARM BELL, MODULES, AND TAMPER SWITCHES MUST BE CONNECTED TO EXISTING FIRE ALARM PANEL BY A QUALIFIED FIRE ALARM CONTRACTOR. FIELD VERIFY EXACT LOCATION.

6. EXISTING ARCHITECTURAL, STRUCTURAL, MECHANICAL, PLUMBING AND ELECTRICAL DRAWINGS AND SPECIFICATION SHALL BE REVIEWED BY THE CONTRACTOR AND ARE PART OF THIS CONTRACT. NO EXTRAS WILL BE ALLOWED FOR INTERFERENCE WITH WORK OF OTHER TRADES.

7. SEE SPECIFICATIONS 21 05 11 AND 21 13 13 FOR ADDITIONAL REQUIREMENT AND SUBMITTAL DATA.

8. PAY FOR INSPECTIONS AND SUBMITTALS FOR A COMPLETE OPERATIONAL SYSTEM.

9. BEFORE PROCEEDING WITH CONSTRUCTION WORK, SPRINKLER DESIGN DRAWINGS, INCLUDING COMPLETE PIPING LAYOUT, SPRINKLER LOCATION, HYDRAULIC CALCULATION AND PRODUCT SUBMITTALS SHALL BE APPROVED BY CITY OF LONG BEACH FIRE DEPARTMENT, THE ARCHITECT, AND VA PROJECT MANAGER.

10. IMPAIRMENT OF EXISTING SPRINKLER SYSTEM FOR MODIFICATION SHALL BE LIMITED TO A MINIMUM AND SHALL BE AUTHORIZED BY THE VA AND ARCHITECT. BEFORE AUTHORIZATION IS GIVEN, VERIFY THAT THE FOLLOWING ITEMS ARE ACCOMPLISHED:

    10.1. DETERMINE THE EXACT AREA OF THE INTENDED IMPAIRMENT AND DURATION.

    10.2. INSPECT THE AREA INVOLVED AND DETERMINE THE INCREASED FIRE AND LIFE SAFETY RISKS.

    10.3. NOTIFY THE VA AND ARCHITECT OF THE AFFECTED AREA OF THE IMPAIRMENT.

    10.4. SUBMIT RECOMMENDATIONS TO VA & ARCHITECT FOR TEMPORARY PROTECTION, TERMINATION OF ALL HAZARDOUS OPERATIONS (WELDING, OPEN FLAME SOLDERING, ETC. AND ADVISE FREQUENT INSPECTION OF THE AREAS INVOLVED WITH 24 HOURS PER DAY WATCHMAN SERVICE.

    10.5. CONTRACTOR SHALL OBTAIN THE NAME OF THE INSURANCE CARRIER AND FIRE ALARM COMPANY FROM THE ARCHITECT AND VA TO VERIFY THAT THE INSURANCE AND FIRE ALARM COMPANIES HAVE BEEN NOTIFIED AS TO WHICH EXISTING SPRINKLER SYSTEM IS IMPAIRED.

11. WHEN IMPAIRED PIPING OR EQUIPMENT IS RESTORED TO NORMAL WORKING ORDER PROVIDE VERIFICATION OF THE FOLLOWING:

    11.1. VERIFY THAT CONTROL VALVES ARE FULLY OPEN AND LOCKED, SEALED OR EQUIPPED WITH A TAMPER SWITCH.

    11.2. CONDUCT A MAIN DRAIN AND ALARM TEST ON EACH SPRINKLER SYSTEM AFFECTED.

    11.3. ADVISE THE OWNER, THE INSURANCE COMPANIES AND THE ALARM COMPANY THAT PROTECTION HAS BEEN RESTORED.

12. DESIGN SHALL COMPLY WITH FIRE PROTECTION SECTIONS OF VA DESIGN MANUALS, PG-18-10; AND "EQUIPMENT GUIDE LIST", PG-18-5; ALSO NFPA AND VA STANDARDS, WITH NFPA TAKING PRECEDENCE.

13. SEISMIC DESIGN REQUIREMENTS OF THE PROJECT SHALL CONFORM TO VA DESIGN HANDBOOK H-18-8.

14. PROVIDE APPROVED GUARDS FOR SPRINKLERS IN LOW CEILINGS, BELOW DUCTS, BEAMS OR OTHER SPRINKLER HEADS LESS THAN 7'-0" ABOVE THE FINISHED FLOOR.

15. REFER TO GENERAL SHEETS FOR PHASING DIAGRAM.

FIRE SPRINKLER LEGEND

SYMBOL	ABBREV.	IDENTIFICATION
		LIGHT HAZARD OCCUPANCY
		ORDINARY HAZARD GROUP 1 OCCUPANCY
		ORDINARY HAZARD GROUP 2 OCCUPANCY
	(E)	EXISTING TO REMAIN
	(E)F	EXISTING TO BE REMOVED
	(N)	NEW
F	F	FIRE WATER PIPING
(E)F	(E)F	EXISTING FIRE WATER PIPING
AS	AS	AUTOMATIC SPRINKLER PIPING
(E)AS	(E)AS	EXISTING AUTOMATIC SPRINKLER PIPING
D	D	DRAIN PIPING
E	E	ELECTRICAL WIRING (BY ELECTRICAL CONTRACTOR)
		ANGLE VALVE
		FIRE RISER
		FIRE BELL
	POC	POINT OF CONNECTION
	POD	POINT OF DISCONNECTION
	ABV.	ABOVE
	AS	AUTOMATIC SPRINKLERS
	BEL.	BELOW
	CLG.	CEILING
	CSP	COMBINATION STAND PIPE
	DN	DOWN
	DS	DRY SPRINKLERS
	EXIST.	EXISTING
	(E)	EXISTING
	NFPA	NATIONAL FIRE PROTECTION ASSOCIATION
	TP	TRAP PRIMER
	UFC	UNIFORM FIRE CODE

CONSTRUCTION DOCUMENTS
FULLY SPRINKLERED

F9

No.	Description	Date
1	SCHEMATIC DESIGN (SD)	10/20/2015
2	DESIGN DEVELOPMENT (DD)	01/18/2016
3	CONSTRUCTION DOCUMENTS (CD)	03/30/2016

CONSULTANTS:

15371

dHA + CALPEC
150 S. ARROYO PARKWAY
SUITE NO. 100
PASADENA, CA. 91105
TEL: (626) 445-8580
FAX: (626) 445-8081

Seals and Signatures

REGISTERED PROFESSIONAL ENGINEER
KEVIN TROY GUSTAFSON
Exp 12-31-16
NO. 31405
MECHANICAL
STATE OF CALIFORNIA

ARCHITECTS/ENGINEERS:

LEO A DALY
PLANNING
ARCHITECTURE
ENGINEERING
INTERIORS
550 South Hope Street, 27th Floor
Los Angeles, California 90071, USA
213-629-0100 F213-629-0070
EST. 1915

Drawing Title: FIRE SUPPRESSION LEGEND AND NOTES

Approved: Project Director

Project Title: CONSTRUCT OPERATING ROOM #8

Location: 11201 BENTON STREET, LOMA LINDA, CA 92357

Date: 3/30/2016 | Checked: KG | Drawn: dHA+CALPEC

Project Number: 605-14-640

Building Number: 1

Drawing Number: FX001

Dwg. of

Office of Construction and Facilities Management

Department of Veterans Affairs

VA FORM 08-6231

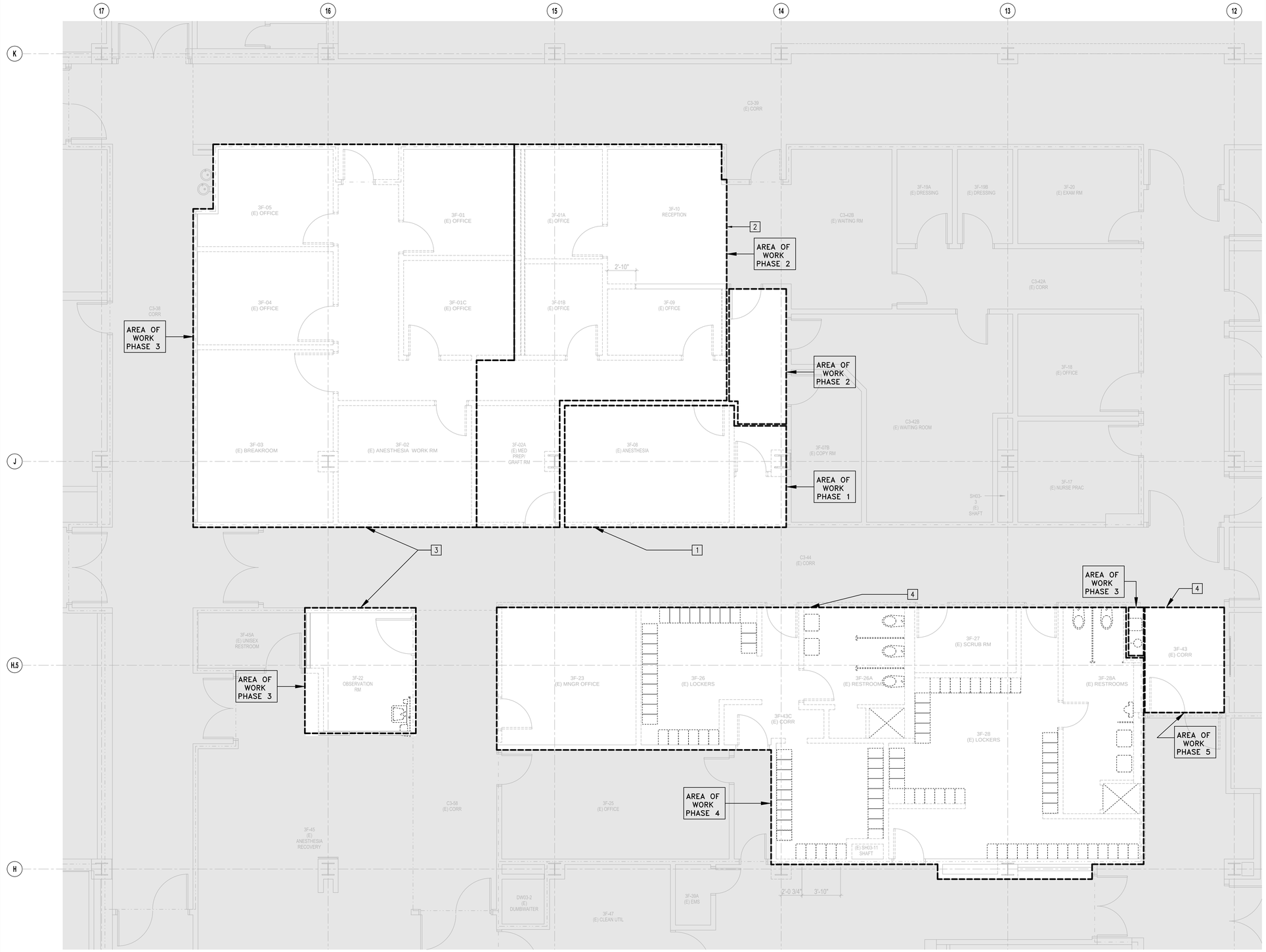

1 FIRE SUPPRESSION FLOOR PLAN - LEVEL 3 - AREA D
SCALE: 1/4" = 1'-0"

DEMO SHEET NOTES

1. PHASE 1: REMOVE ALL (E)FIRE SPRINKLER HEAD AND ANY RELATED ITEM. CUT & CAP (E)FS PIPE ABV CLG TO THE MAIN LINE IN 3TH FLOOR INTERSTITIAL SPACE FOR INSTALLATION OF NEW.
2. PHASE 2: REMOVE ALL (E)FIRE SPRINKLER HEAD AND ANY RELATED ITEM. CUT & CAP (E)FS PIPE ABV CLG TO THE MAIN LINE IN 3TH FLOOR INTERSTITIAL SPACE FOR INSTALLATION OF NEW.
3. PHASE 3: REMOVE ALL (E)FIRE SPRINKLER HEAD AND ANY RELATED ITEM. CUT & CAP (E)FS PIPE ABV CLG TO THE MAIN LINE IN 3TH FLOOR INTERSTITIAL SPACE FOR INSTALLATION OF NEW.
4. PHASE 4: REMOVE ALL (E)FIRE SPRINKLER HEAD AND ANY RELATED ITEM. CUT & CAP (E)FS PIPE ABV CLG TO THE MAIN LINE IN 3TH FLOOR INTERSTITIAL SPACE FOR INSTALLATION OF NEW.
5. PHASE 5: REMOVE ALL (E)FIRE SPRINKLER HEAD AND ANY RELATED ITEM. CUT & CAP (E)FS PIPE ABV CLG TO THE MAIN LINE IN 3TH FLOOR INTERSTITIAL SPACE FOR INSTALLATION OF NEW.

EXACT SIZE, ELEVATION, & LOCATION OF EXISTING SHALL BE FIELD VERIFIED.

CONSTRUCTION DOCUMENTS
FULLY SPRINKLERED
F9

No.	Description	Date
1	SCHEMATIC DESIGN (SD)	10/20/2015
2	DESIGN DEVELOPMENT (DD)	01/18/2016
3	CONSTRUCTION DOCUMENTS (CD)	03/30/2016

CONSULTANTS:

15371 dHA + CALPEC
150 S. ARROYO PARKWAY
SUITE NO. 100
PASADENA, CA. 91105
TEL: (626) 445-8580
FAX: (626) 445-8081

Seals and Signatures

REGISTERED PROFESSIONAL ENGINEER KEVIN TROY GUAY EXP 12-31-16 NO. 31496 MECHANICAL STATE OF CALIFORNIA

ARCHITECTS/ENGINEERS:

LEO A DALY
PLANNING ARCHITECTURE ENGINEERING INTERIORS
550 South Hope Street, 27th Floor
Los Angeles, California 90071, USA
213-629-0100 F213-629-0070
EST. 1915

Drawing Title: FIRE SUPPRESSION DEMO FLOOR PLAN - LEVEL 3 AREA D

Approved: Project Director

Project Title: CONSTRUCT OPERATING ROOM #8

Location: 11201 BENTON STREET, LOMA LINDA, CA 92357

Date: 3/30/2016 | Checked: KG | Drawn: dHA+CALPEC

Project Number: 605-14-640

Building Number: 1

Drawing Number: FD101

Dwg. of

Office of Construction and Facilities Management

Department of Veterans Affairs

VA FORM 08-6231

1 FIRE SUPPRESSION FLOOR PLAN
SCALE: 1/4" = 1'-0"

CONSTRUCTION DOCUMENTS
FULLY SPRINKLERED

F9

No.	Description	Date
1	SCHEMATIC DESIGN (SD)	10/20/2015
2	DESIGN DEVELOPMENT (DD)	01/18/2016
3	CONSTRUCTION DOCUMENTS (CD)	03/30/2016

CONSULTANTS:

15371
dHA + CALPEC
150 S. ARROYO PARKWAY
SUITE NO. 100
PASADENA, CA. 91105
TEL: (626) 445-8580
FAX: (626) 445-8081

Seals and Signatures

REGISTERED PROFESSIONAL ENGINEER
KEVIN TROY GUSTAFSON
NO. 31496
MECHANICAL
STATE OF CALIFORNIA

ARCHITECTS/ENGINEERS:

LEO A DALY
PLANNING
ARCHITECTURE
ENGINEERING
INTERIORS
550 South Hope Street, 27th Floor
Los Angeles, California 90071, USA
213-629-0100 F213-629-0070
EST. 1915

Drawing Title
FIRE SUPPRESSION - LEVEL 3 - AREA D

Approved: Project Director

Project Title
CONSTRUCT OPERATING ROOM #8

Location
11201 BENTON STREET, LOMA LINDA, CA 92357

Date 3/30/2016
Checked KG
Drawn dHA+CALPEC

Project Number 605-14-640
Building Number 1
Drawing Number FX101
Dwg. of

Office of Construction and Facilities Management
Department of Veterans Affairs

VA FORM 08-6231

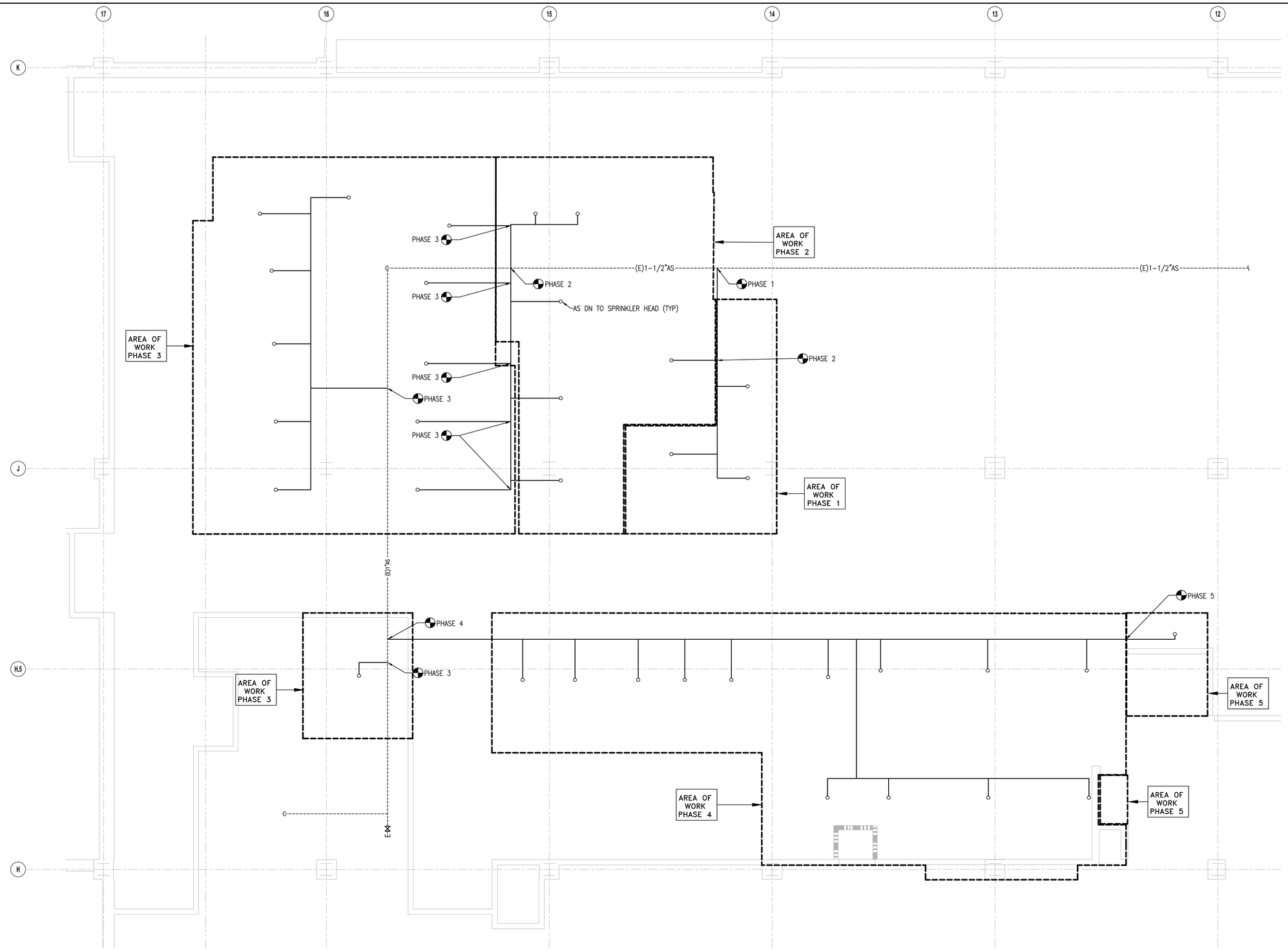

1 **FIRE SUPPRESSION INTERSTITIAL PLAN - LEVEL 3 - AREA D**
SCALE: 1/4" = 1'-0"

CONSTRUCTION DOCUMENTS
FULLY SPRINKLERED

F9

No.	Description	Date
1	SCHEMATIC DESIGN (SD)	10/20/2015
2	DESIGN DEVELOPMENT (DD)	01/18/2016
3	CONSTRUCTION DOCUMENTS (CD)	03/30/2016

CONSULTANTS:

15371

dHA + CALPEC
150 S. ARROYO PARKWAY
SUITE NO. 100
PASADENA, CA. 91105
TEL: (626) 445-8580
FAX: (626) 445-8081

Seals and Signatures

REGISTERED PROFESSIONAL ENGINEER
KEVIN TROY GUALDONI
EXP 12-31-16
NO. 31496
MECHANICAL
STATE OF CALIFORNIA

ARCHITECTS/ENGINEERS:

LEO A DALY
PLANNING
ARCHITECTURE
ENGINEERING
INTERIORS
550 South Hope Street, 27th Floor
Los Angeles, California 90071, USA
213-629-0100 F213-629-0070
EST. 1915

Drawing Title
FIRE SUPPRESSION
INTERSTITIAL PLAN - LEVEL 3

Approved: Project Director

Project Title
CONSTRUCT OPERATING
ROOM #8

Location
11201 BENTON STREET, LOMA LINDA, CA 92357

Date 3/30/2016
Checked KG
Drawn dHA+CALPEC

Project Number 605-14-640
Building Number 1
Drawing Number FX102
Dwg. of

Office of Construction and Facilities Management
Department of Veterans Affairs

VA FORM 08-6231

GENERAL NOTES

A. GENERAL:

1. SCOPE OF THE PROJECT INCLUDES WORK SHOWN ON THE DRAWINGS AND IN THE SPECIFICATIONS.
2. WORK SHOWN ON THE DRAWINGS IS INCLUSIVE, WHETHER SHOWN AT EACH LOCATION OR NOT, AS LONG AS IT IS SHOWN IN ONE LOCATION ON THE DRAWINGS OR IN THE SPECIFICATIONS WORK SHALL BE PROVIDED.
3. THE CONTRACT DRAWINGS AND SPECIFICATIONS REPRESENT THE FINISHED WORK. THEY DO NOT INDICATE THE METHOD OF CONSTRUCTION. CONTRACTOR SHALL SUPERVISE AND DIRECT THE WORK AND SHALL BE RESPONSIBLE FOR CONSTRUCTION MEANS AND METHODS, TECHNIQUES, SEQUENCES AND PROCEDURES.
4. THESE DRAWINGS ARE DIAGRAMMATIC. THE CONTRACTOR SHALL ASSUME FULL RESPONSIBILITY OF COORDINATION WITH VARIOUS TRADES AND INCLUDE TURNS, BENDS, ADDITIONAL LENGTHS OF PIPING AND ELEVATION CHANGES, AND TRANSITIONS WITHOUT ADDITIONAL COST TO THE OWNER.
5. THE CONTRACTOR MUST EXAMINE CONSTRAINTS AND THE AVAILABLE SPACE AT THE JOB SITE THAT MAY REQUIRE CUSTOM FABRICATION OR DISASSEMBLY AND RE-ASSEMBLY OF CERTAIN EQUIPMENT.
6. PROTECT MATERIALS INCLUDING PIPES FROM DUST AND DEBRIS AND KEEP OPEN END OF PIPES COVERED UNTIL READY FOR INSTALLATION OF NEXT SEGMENT OF WORK.
7. WORK AND EXISTING CONDITIONS DAMAGED OR CUT INTO DURING CONSTRUCTION SHALL BE PATCHED, REPAIRED, PAINTED AND FINISHED TO MATCH ADJACENT SURFACES IN TEXTURE, COLOR, AND FINISH.
8. PLUMBING EQUIPMENT, MATERIALS, AND INSTALLATION SHALL BE IN ACCORDANCE WITH THE LATEST INTERNATIONAL BUILDING CODE, INTERNATIONAL MECHANICAL CODE, INTERNATIONAL PLUMBING CODE AND INTERNATIONAL FIRE CODE.
9. WORK TO BE INSTALLED OUTDOORS; INCLUDING, BUT NOT LIMITED TO; EQUIPMENT, PIPING, AND CONTROL DEVICES SHALL BE COMPLETELY WEATHERPROOFED.
10. VENTS SHALL BE A MINIMUM OF 25'-0" AWAY FROM OUTSIDE AIR INTAKES.
11. PIPE PENETRATIONS, ROOF JACKS AND EQUIPMENT SUPPORT PADS SHALL BE COMPATIBLE WITH ROOFING SYSTEM. FLASH AND COUNTERFLASH WEATHER EXPOSED ROOF OPENINGS. REFER TO ARCHITECTURAL DRAWINGS FOR REQUIRED FLASHING DETAILS.
12. CUTTING, BORING, SAWCUTTING OR DRILLING THROUGH NEW OR EXISTING STRUCTURAL ELEMENTS SHALL BE DONE ONLY WHEN SO DETAILED ON THE STRUCTURAL DRAWINGS. COORDINATE EXACT LOCATION OF CORE DRILLING, CUTTING OF FLOOR SLAB, OR WALLS OF THE BUILDING WITH THE STRUCTURAL DRAWINGS. DO NOT CUT OR DRILL HOLES IN ANY STRUCTURAL ELEMENT WITHOUT APPROVAL OF THE ARCHITECT.
13. CONDITIONS THAT, IN THE CONTRACTOR'S OPINION, PREVENT THE EXECUTION OF THE WORK AS INTENDED SHALL BE BROUGHT TO THE ATTENTION OF THE ARCHITECT IN THE FORM OF AN RFI BEFORE BEGINNING THE WORK IN QUESTION.
14. WORK PERFORMED UNDER THIS CONTRACT IS SUBJECT TO INSPECTION BY THE BUILDING OWNER, ARCHITECT, AND ENGINEER FOR CONFORMITY WITH EXISTING BUILDING SYSTEMS, QUALITY OF PRODUCTS AND INSTALLATION. CONTRACTOR SHALL NOT PERFORM WORK THAT MAY ADVERSELY AFFECT THE EXISTING BUILDING SYSTEMS OPERATION, EITHER DUE TO IMPROPER INSTALLATION, INADEQUATE COORDINATION OR POOR WORKMANSHIP. WORK INSPECTED AND FOUND UNACCEPTABLE BY THE OWNER, ARCHITECT SHALL BE PROMPTLY REPLACED OR CORRECTED AT NO ADDITIONAL COST.
15. FIELD OBSERVATION AND SUPPORT SERVICES PERFORMED BY THE ENGINEER PRIOR TO, DURING, OR AFTER CONSTRUCTION ARE FOR THE PURPOSE OF ACHIEVING QUALITY CONTROL AND SHALL NOT BE CONSTRUED AS SUPERVISION OF CONSTRUCTION.
16. PROVIDE ACCESS DOORS/PANELS REQUIRED FOR SERVICING LISTED ITEMS SUCH AS VALVES, PIPE CLEANOUTS AND DEVICES REQUIRING ACCESS WHETHER OR NOT SUCH ACCESS IS SHOWN ON DRAWINGS. COORDINATE EXACT LOCATION OF CEILING, WALL, OR FLOOR ACCESS PANELS WITH ARCHITECTURAL DRAWINGS. ACCESS PANELS FOR VALVES AND PIPE CLEANOUTS ABOVE CEILINGS SHALL BE A MINIMUM OF 18-INCH BY 18-INCH.
17. PLUMBING FIXTURES OR FITTINGS INTENDED TO DISPENSE WATER FOR HUMAN CONSUMPTION WHICH CONTAIN MORE THAN 25% LEAD ARE NOT PERMITTED TO BE SOLD OR INSTALLED ANYWHERE WITHIN THE STATE OF CALIFORNIA. THESE DEVICES SHALL BE LISTED TO ANNEX G OF NSF/ANSI 61-2008 OR OTHER APPROVED TESTING STANDARD. EVIDENCE OF COMPLIANCE SHALL BE PRESENTED TO THE BUILDING INSPECTOR PRIOR TO FINAL INSPECTION (AB1963).
18. SHUTDOWN OF UTILITIES REQUIRED TO PERFORM WORK SHALL BE COORDINATED WITH THE OWNER.

B. EQUIPMENT AND FIXTURES:

1. MANUFACTURERS AND MODEL NUMBERS SHOWN ON EQUIPMENT AND FIXTURES SCHEDULES HAVE BEEN UTILIZED FOR DESIGN. REFER TO SPECIFICATIONS FOR ALTERNATE MANUFACTURERS AND/OR EQUIVALENTS.
2. A MAINTENANCE LABEL SHALL BE AFFIXED TO PLUMBING EQUIPMENT AND A MAINTENANCE MANUAL SHALL BE PROVIDED FOR THE OWNER'S USE.
3. INSTALL EQUIPMENT IN ACCESSIBLE LOCATION AND PROVIDE ADEQUATE SERVICE CLEARANCE FOR NORMAL MAINTENANCE WITHOUT REQUIRING REMOVAL OF MECHANICAL, ARCHITECTURAL, ELECTRICAL OR STRUCTURAL ELEMENTS.
4. FOR EQUIPMENT LOCATED ABOVE CEILING, INSTALL SUCH EQUIPMENT CLOSE ENOUGH TO THE CEILING ELEVATION TO FACILITATE READY ACCESS FOR MAINTENANCE AND SERVICING.
5. VERIFY ELECTRICAL CHARACTERISTICS WITH ELECTRICAL DRAWINGS PRIOR TO BID, MATERIAL PURCHASE, AND INSTALLATION.

C. PIPING:

1. PIPING PENETRATING SLAB TO SLAB PARTITIONS SHALL BE SEALED AIRTIGHT. A RESILIENT CAULKING AND PACKING SHALL BE USED. SEAL ALL OPENINGS AROUND PIPING PENETRATING FIRE RESISTIVE RATED WALLS AND FLOORS TO MAINTAIN RATING INTEGRITY.
2. PIPING SHALL BE TESTED PER REQUIREMENTS OF AUTHORITY HAVING JURISDICTION.
3. VALVES SHALL BE LINE SIZE UNLESS OTHERWISE NOTED.
4. LOCATE VALVES IN EASILY ACCESSIBLE LOCATIONS.
5. PROVIDE ISOLATING VALVES AND UNIONS ON PIPING ADJACENT TO EQUIPMENT. LOCATE VALVES SO THE EQUIPMENT CAN BE REMOVED WITHOUT DISMANTLING BRANCH LINES.
6. CIRCUIT SETTERS AND BALANCING VALVES FOR HOT WATER RETURN SYSTEMS SHALL BE INSTALLED PER MANUFACTURER'S RECOMMENDED UPSTREAM AND DOWNSTREAM STRAIGHT PIPE LENGTHS.
7. REFER TO MECHANICAL DRAWINGS FOR CONDENSATE DRAIN PIPING.
8. CLEANOUTS SHALL BE PROVIDED ON WASTE PIPING AS REQUIRED BY INTERNATIONAL PLUMBING CODE AND WHERE INDICATED ON THE DRAWINGS. PROVIDE CLEARANCE IN FRONT OF CLEANOUTS AS REQUIRED BY CODE AS MINIMUM.
9. BURRED ENDS OF PIPING AND TUBING SHALL BE REAMED TO THE FULL BORE OF THE PIPE OR TUBE AND CHIPS SHALL BE REMOVED PER INTERNATIONAL PLUMBING CODE. ADDITIONALLY, TOOLS USED IN CUTTING OR REAMING SHALL BE KEPT FREE FROM OIL OR GREASE. WHERE SUCH CONTAMINATION HAS OCCURRED, THE AFFECTED SHALL BE REWORKED AND RINSED PER NFPA 56-F-5.1-1.
10. PIPING BELOW GRADE SHALL BE INSTALLED WITH NOT LESS THAN 24-INCH BETWEEN TOP OF PIPE AND FINISHED GRADE.
11. STORM DRAINAGE SYSTEM IS SIZED BASED UPON 2-INCH PER HOUR RAINFALL.
12. STORM DRAIN AND OVERFLOW DRAIN PIPING SHALL BE INSTALLED AT 1/4-INCH PER FOOT (2%) SLOPE UNLESS OTHERWISE NOTED.
13. WASTE AND VENT PIPING SHALL BE INSTALLED AT 1/4-INCH PER FOOT (2%) SLOPE UNLESS OTHERWISE NOTED.
14. CONNECTIONS BETWEEN PIPING OF DISSIMILAR METALS SHALL BE MADE WITH DIELECTRIC UNIONS.
15. COMPLETE LAYOUT DRAWINGS SHALL BE REQUIRED BY PARAGRAPH, SUBMITTALS. CONSTRUCTION WORK SHALL NOT START ON ANY SYSTEM UNTIL THE LAYOUT DRAWINGS HAVE BEEN APPROVED BY VA.
16. EXTEND HOT WATER LOOP CLOSE TO THE FIXTURE AS POSSIBLE. NO DEAD LEG ALLOWED.

PLUMBING ABBREVIATIONS

ABBREV.	DESCRIPTION	ABBREV.	DESCRIPTION
A, AMPS	AMPERES	LO2	LIQUID OXYGEN
ABV	ABOVE	MAX	MAXIMUM
AD	ACCESS DOOR	MBH	THOUSAND BRITISH THERMAL UNITS PER HOUR
AFF	ABOVE FINISHED FLOOR	MCA	MINIMUM CIRCUIT AMPACITY
AFG	ABOVE FINISHED GRADE	MCC	MOTOR CONTROL CENTER
AFS	AUTOMATIC FIRE SPRINKLER	MFGR	MANUFACTURER
AP	ACCESS PANEL	MIN	MINIMUM
ARCH	ARCHITECTURAL	MOCP	MAXIMUM OVERCURRENT PROTECTION
AUTO	AUTOMATIC	NEMA	NATIONAL ELECTRICAL MANUFACTURERS ASSOCIATION
BEH	BEHIND	NIC	NOT IN CONTRACT
BEL	BELOW	NO.	NUMBER
BFG	BELOW FINISHED GRADE	OC	ON CENTER
BHP	BRAKE HORSEPOWER	OFCI	OWNER FURNISHED AND CONTRACTOR INSTALLED
BTUH	BRITISH THERMAL UNITS PER HOUR	OPNG	OPENING
C.C.	CENTER TO CENTER	OP, OPER	OPERATING
CD	CONDENSATE DRAIN	PD	PRESSURE DROP
CFH	CUBIC FEET PER HOUR	PH	PHASE
CLG	CEILING	PIV	POST INDICATOR VALVE
COMP	COMPRESSOR	PR, PRESS	PRESSURE
CONC	CONCRETE	PSI	POUND PER SQUARE INCH
CONN	CONNECTION	QTY	QUANTITY
CP	CIRCULATING PUMP	RPM	REVOLUTIONS PER MINUTE
CTR	COUNTER	SH	SHOWER
CV	CHECK VALVE	SHD	SHOWER DRAIN
D	DRAIN	SEER	SEASONAL ENERGY EFFICIENCY RATIO
DI	DEIONIZED WATER	SF, SQ FT	SQUARE FEET
DEMO	DEMOLITION	SK	SINK
DN	DOWN	SKT	SINK TRIM
DWGS	DRAWINGS	SOV	SHUT-OFF VALVE
EX, EXIST	EXISTING	SP	SUMP PUMP
EA	EACH	SPEC(S)	SPECIFICATIONS
ESEW	EMERGENCY SHOWER AND EYEWASH	SS	SERVICE SINK
EWC	ELECTRIC WATER COOLING	SW	SWITCH
ELECT	ELECTRICAL	T	TRANSFORMER
ELEV	ELEVATION	TMV	THERMOSTATIC MIXING VALVE
ENCL	ENCLOSURE	TP	TRAP PRIMER
°F	DEGREES FAHRENHEIT	TYP	TYPICAL
FD	FLOOR DRAIN	UG	UNDERGROUND
FDC	FIRE DEPARTMENT CONNECTION	UL	UNDERWRITER'S LABORATORY
FF	FINISHED FLOOR	UON	UNLESS OTHERWISE NOTED
FLA	FULL LOAD AMPS	UOS	UNDER OTHER SECTION OF SPECIFICATIONS
FLEX	FLEXIBLE	UR	URINAL
FLR	FLOOR	UTR	UP THRU ROOF
FR	FROM	V	VOLTS
FS	FLOOR SINK	VB	VACUUM BREAKER
FT	FOOT	VO	VENT OFFSET
FUT	FUTURE	VR	VENT RISER
FV	FLUSH VALVE	VFD	VARIABLE FREQUENCY DRIVE
GAL	GALLON	VTR	VENT THRU ROOF
GC	GAS COCK	W	WIDTH
GPF	GALLONS PER FLUSH	W/	WITH
GPM	GALLONS PER MINUTE	WC	WATER CLOSET
GT	GAS TURRET	WCS	SECURITY WATER GAUGE
H	HEIGHT	WH	WATER HEATER
HB	HOSE BIBB	W/O	WITHOUT
HP	HORSEPOWER	WP	WEATHER PROOF
HR	HOUR	WT	WEIGHT
HZ	HERTZ	WTR	WATER
IN	INCH	YB	YARD BOX
KW	KILOWATT		
L	LENGTH		
LAV	LAVATORY		
LBS	POUNDS		

SEISMIC BRACING NOTES

1. CONTRACTOR TO PROVIDE SEISMIC ANCHORAGE AND BRACING FOR MECHANICAL EQUIPMENT THAT IS DIRECTLY MOUNTED ON THE FLOOR OR ROOF AND MECHANICAL EQUIPMENT THAT IS SUSPENDED FROM THE FLOOR, WALL OR SUPPORTED BY VIBRATION ISOLATORS IN COMPLIANCE WITH THE 2013 CALIFORNIA BUILDING CODE AND VA H-18-8 (AUG. 2013).
2. ANCHORAGE AND SUPPORTING STRUCTURAL ELEMENTS SHALL BE DESIGNED TO WITHSTAND THE LATERAL FORCES AS REQUIRED BY 2013 CALIFORNIA BUILDING CODE AND VA H-18-8 (AUG. 2013).
3. PROVIDE ANCHORAGE CALCULATIONS AND DETAILS CERTIFIED BY A STRUCTURAL ENGINEER REGISTERED IN THE STATE OF CALIFORNIA.
4. SEISMIC BRACING AND ANCHORAGE OF PIPING, DUCTWORK, AND SUSPENDED EQUIPMENT SHALL BE PROVIDED USING A SEISMIC RESTRAINT MANUAL: MASON INDUSTRIES "SEISMIC RESTRAINT GUIDELINES FOR SUSPENDED PIPING, DUCTWORK, AND ELECTRICAL SYSTEMS", I.S.A.T. "ENGINEERED SEISMIC BRACING OF SUSPENDED UTILITIES", OR APPROVED EQUAL.
   A. A COPY OF THE APPROVED SEISMIC RESTRAINT SYSTEMS INSTALLATION GUIDE/MANUAL SHALL BE PROVIDED BY THE CONTRACTOR PRIOR TO STARTING INSTALLATION AND KEPT ON THE JOB SITE.
   B. PROVIDE SHOP DRAWINGS SHOWING HOW PRE-APPROVED SYSTEM WILL BE APPLIED TO EACH PIPE AND DUCT SYSTEM. STRUCTURAL ENGINEER OF RECORD SHALL VERIFY ADEQUACY OF SUPPORTING STRUCTURE TO SUPPORT LOADS OF ANCHORAGE AND BRACING SYSTEM BASED ON SHOP DRAWINGS. STRUCTURAL ENGINEER OF RECORD SHALL REVIEW SHOP DRAWINGS.
   C. SHOP DRAWINGS OF SEISMIC BRACING SHALL BE AVAILABLE TO THE INSPECTOR OF RECORD TO VERIFY THE INSTALLATION OF THE SEISMIC BRACING.
5. THE INSTALLATION SHALL BE SUBJECT TO THE APPROVAL OF THE STRUCTURAL ENGINEER AND VA ENGINEER.
6. WHERE BRACING AND ANCHORAGE DETAILS ARE NOT SHOWN ON THE DRAWINGS OR IN THE GUIDELINES, THE FIELD INSTALLATION SHALL BE SUBJECT TO THE APPROVAL OF VA ENGINEER, THE ARCHITECT, STRUCTURAL ENGINEER, AND MECHANICAL ENGINEER.
7. REFER TO STRUCTURAL DRAWINGS FOR CONCRETE ANCHOR TYPE AND INSTALLATION REQUIREMENTS.
8. PIPING, DUCTWORK AND CONDUIT CROSSING BUILDING SEISMIC SEPARATIONS SHALL BE PROVIDED WITH APPROVED FLEXIBLE CONNECTORS.

PLUMBING PIPE TYPE LEGEND

SYMBOL	FLUID ABBREV.	DESCRIPTION
	S OR W	SOIL OR WASTE PIPING
	S OR W	SOIL OR WASTE PIPING BELOW FLOOR OR GRADE
CWV	CWV	COMBINATION WASTE AND VENT PIPING
CWV	CWV	COMBINATION WASTE & VENT PIPING BELOW FLOOR OR GRADE
FM	FM	FORCED MAIN WASTE PIPING
V	V	VENT PIPING
SD	SD	STORM DRAIN PIPING
SD	SD	STORM DRAIN PIPING BELOW FLOOR OR GRADE
OD	OD	OVERFLOW STORM DRAIN PIPING
OD	OD	OVERFLOW STORM DRAIN PIPING BELOW FLOOR OR GRADE
	CW	POTABLE COLD PIPING
CW	CW	POTABLE COLD WATER PIPING BELOW FLOOR OR GRADE
	HW	POTABLE HOT WATER PIPING (ABOVE 110°F)
HW	HW	POTABLE HOT WATER PIPING BELOW FLOOR OR GRADE
	HWR	POTABLE HOT WATER RETURN PIPING
HWR	HWR	POTABLE HOT WATER RETURN PIPING BELOW FLOOR OR GRADE
TP	TP	TRAP PRIMER WATER SUPPLY PIPING BELOW FLOOR OR GRADE
TW	TW	POTABLE TEMPERED WATER (85°F TO 110°F)
ICW	ICW	INDUSTRIAL COLD WATER
G	G	LOW PRESSURE GAS PIPING (8 TO 14-INCH WATER GAUGE)
G	G	LOW PRESSURE GAS PIPING BELOW FLOOR OR GRADE
MPG	MPG	MEDIUM PRESSURE GAS PIPING (3 OR 5-PSIG)
MPG	MPG	MEDIUM PRESSURE GAS PIPING BELOW FLOOR OR GRADE
SCW	SCW	SOFT COLD WATER
DIS	DIS	DEIONIZED WATER SUPPLY PIPING
(E)S OR (E)W	(E)S OR (E)W	EXISTING SOIL OR WASTE PIPING
(E)MA	(E)MA	EXISTING MEDICAL AIR PIPING
(E)MV	(E)MV	EXISTING MEDICAL VACUUM PIPING
(E)O2	(E)O2	EXISTING OXYGEN PIPING
(E)V	(E)V	EXISTING VENT PIPING
(E)CW	(E)CW	EXISTING POTABLE COLD WATER PIPING
(E)HW	(E)HW	EXISTING POTABLE HOT WATER PIPING
(E)HWR	(E)CW	EXISTING POTABLE HOT WATER RETURN PIPING
MA	MA	MEDICAL AIR PIPING
MV	MV	MEDICAL VACUUM PIPING
O2	O2	OXYGEN PIPING
(E)N2O	(E)N2O	EXISTING NITROUS OXIDE PIPING
N2O	N2O	NITROUS OXIDE PIPING
(E)N2	(E)N2	EXISTING NITROGEN PIPING
N2	N2	NITROGEN PIPING
(E)WAGD	(E)WAGD	EXISTING WASTE ANESTHETIC GAS DISPOSAL PIPING
WAGD	WAGD	WASTE ANESTHETIC GAS DISPOSAL PIPING
(E)CO2	(E)CO2	EXISTING CARBON DIOXIDE PIPING
CO2	CO2	WASTE CARBON DIOXIDE PIPING

PLUMBING SYMBOL LEGEND

SYMBOL	ABBREV.	DESCRIPTION
(E)XX	(E)	EXISTING TO REMAIN (XX INDICATES FLUID ABBREVIATION, REFER TO PLUMBING PIPE TYPE LEGEND)
(E)XX		EXISTING TO BE REMOVED (XX INDICATES FLUID ABBREVIATION, REFER TO PLUMBING PIPE TYPE LEGEND)
XX	(N)	NEW WORK (XX INDICATES FLUID ABBREVIATION, REFER TO PLUMBING PIPE TYPE LEGEND)
		FLOW IN DIRECTION OF ARROW
		PIPE ELBOW DOWN OR AWAY FROM VIEWER
		PIPE ELBOW UP OR TOWARD VIEWER
		PIPE TEE DOWN OR AWAY FROM VIEWER
		PIPE TEE UP OR TOWARD VIEWER
		ANCHOR
BFP	BFP	BACKFLOW PRENVENTOR (REFER TO DRAWINGS FOR TYPE)
		BALL VALVE
		BUTTERFLY VALVE
	CBV	CALIBRATED BALANCE VALVE
		CAPPED PIPE END
		CHECK VALVE
FCO	FCO	CLEAN-OUT (FLOOR)
COTG	COTG	CLEAN-OUT TO GRADE
WCO	WCO	CLEAN-OUT (WALL)
		INCREASER OR REDUCER
	EJ	EXPANSION JOINT
	CO	CLEAN-OUT
		FLEXIBLE PIPING CONNECTION
FSW	FSW	FLOW SWITCH
		GATE VALVE
		GLOBE VALVE
		PIPE SUPPORT
		PLUG VALVE
PT		PRESSURE AND TEMPERATURE TEST PORT
	PG	PRESSURE GAUGE
	PRV	PRESSURE REGULATING VALVE
PRV		PRESSURE RELIEF VALVE
P&TR	P&TR	PRESSURE AND TEMPERATURE RELIEF VALVE
		PUMP
		SOLENOID VALVE
	RD	STORM (ROOF) DRAIN
	OD	STORM DRAIN (OVERFLOW)
		STRAINER
		THERMOMETER IN PIPING
		UNION
		VALVE IN PIPE RISER DOWN OR AWAY FROM VIEWER
	VTR	VENT THROUGH ROOF
OR	WHA	WATER HAMMER ARRESTOR (LOCATE BEHIND ACCESS PANEL)

PLUMBING NOTATION LEGEND

SYMBOL	ABBREV.	DESCRIPTION
	POC	POINT OF CONNECTION
	POD	POINT OF DISCONNECT OR DEMOLITION
1		SHEET KEY NOTES DEMOLITION
1		SHEET KEY NOTES NEW WORK
ø	DIA	DIAMETER
3 / P6.1		DETAIL NUMBER
		DETAIL SYMBOL
		DRAWING NUMBER WHERE DETAIL IS SHOWN
SK / 1		PLUMBING EQUIPMENT OR FIXTURE ABBREVIATION
		PLUMBING EQUIPMENT OR FIXTURE SYMBOL
		PLUMBING EQUIPMENT OR FIXTURE NUMBER

CONSTRUCTION DOCUMENTS
FULLY SPRINKLERED

F9

No.	Description	Date
1	SCHEMATIC DESIGN (SD)	10/20/2015
2	DESIGN DEVELOPMENT (DD)	01/18/2016
3	CONSTRUCTION DOCUMENTS (CD)	03/30/2016

CONSULTANTS:

15371
dHA + CALPEC
150 S. ARROYO PARKWAY
SUITE NO. 100
PASADENA, CA. 91105
TEL: (626) 445-8580
FAX: (626) 445-8081

Seals and Signatures

ARCHITECTS/ENGINEERS:

LEO A DALY
PLANNING ARCHITECTURE ENGINEERING INTERIORS
550 South Hope Street, 27th Floor
Los Angeles, California 90071, USA
213-629-0100 F213-629-0070
EST. 1915

Drawing Title: PLUMBING LEGENDS AND NOTES

Approved: Project Director

Project Title: CONSTRUCT OPERATING ROOM #8

Location: 11201 BENTON STREET, LOMA LINDA, CA 92357

Date: 3/30/2016 | Checked: KG | Drawn: dHA+CALPEC

Project Number: 605-14-640

Building Number: 1

Drawing Number: PL001

Dwg. of

Office of Construction and Facilities Management

Department of Veterans Affairs

PLUMBING FIXTURE SCHEDULE

SYMBOL	FIXTURE	BRANCH CONNECTION TRAP	WASTE	VENT	HW	CW	CARRIER	REMARKS
WC 1	WATER CLOSET WALL HUNG – ADA	INTEGRAL	4"	2"	–	1-1/2"	"J. R. SMITH" 0210	"AMERICAN STANDARD" AFWALL FLOWISE MODEL 3351.128 VITREOUS CHINA, WHITE, ELONGATED BOWL, SIPHON JET, COMPLETE WITH SLOAN "G2 OPTIMA PLUS" 8111-1.28 BATTERY POWERED SENSOR ACTIVATED FLUSHOMETER, 1.28 GALLONS PER FLUSH WITH OVERRIDE BUTTON, "BEMIS" 2155SSCT ELONGT'D OPEN FRONT SEAT LESS COVER. MOUNT PER A.D.A REQ'S.
WC 2	WATER CLOSET WALL HUNG	INTEGRAL	4"	2"	–	1-1/2"	"J. R. SMITH" 0210	"AMERICAN STANDARD" AFWALL FLOWISE MODEL 3351.128 VITREOUS CHINA, WHITE, ELONGATED BOWL, SIPHON JET, COMPLETE WITH SLOAN "G2 OPTIMA PLUS" 8111-1.28 BATTERY POWERED SENSOR ACTIVATED FLUSHOMETER, 1.28 GALLONS PER FLUSH WITH OVERRIDE BUTTON, "BEMIS" 2155SSCT ELONGT'D OPEN FRONT SEAT LESS COVER.
UR 1	URINAL WALL HUNG –ADA	INTEGRAL	4"	2"	–	1-1/2"	0635 WALL SUPPORT	"AMERICAN STANDARD" WASHBROOK MOEL 6590.125, VITREOUS CHINA, WHITE, WASHOUT FLUSH ACTION, INLET TOP SPUD, FLUSHOMETER SHALL BE SLOAN 8186-0.125 BATTERY POWER SENSOR ACTIVATED 0.125-GALLONS PER FLUSH WITH OVERRIDE BUTTON. PROVIDE WALL CLEANOUT BEH. A.P. ABV. URINAL OVER AND ABV. FLUSH VA. MOUNT PER A.D.A. REQ'S.
L 1	LAVATORY WALL HUNG	1-1/2" CP 17 GA. CAST BRASS	2"	1-1/2"	3/4"	3/4"	"J. R. SMITH" 0710 WALL SUPPORT WITH CONCEALED ARMS.	"AMERICAN STANDARD" REGALYN MODEL NO. 4869.001, CENTER SINGLE HOLE, WALL HUNG. FAUCET SHALL BE "RADA" (KOHLER) #MX1 20NUS, PLUG-IN AND BELOW DECK THERMOSTATIC MIXING VALVE, SENSOR ACTIVATED, FLOW RATE 0.5-GPM FOR A 15-SEC. PROVIDE "TRUEBRO" INSULATING KIT FOR WASTE & HW SUPPLY, TRIMS & SUPPLIES (SELFCLOSING).
L 2	LAVATORY WALL HUNG	1-1/2" CP 17 GA. CAST BRASS	2"	1-1/2"	3/4"	3/4"	"J. R. SMITH" 0710 WALL SUPPORT WITH CONCEALED ARMS.	"AMERICAN STANDARD" REGALYN MODEL NO. 4869.001, CENTER SINGLE HOLE, WALL HUNG. FAUCET SHALL BE "RADA" (KOHLER) #MX1 20NUS, PLUG-IN AND BELOW DECK THERMOSTATIC MIXING VALVE, SENSOR ACTIVATED, FLOW RATE 0.5-GPM FOR A 15-SEC. PROVIDE "TRUEBRO" INSULATING KIT FOR WASTE & HW SUPPLY, TRIMS & SUPPLIES (SELFCLOSING). MOUNT PER A.D.A REQ'S.
SK 1	SINK	2"	2"	1-1/2"	3/4"	3/4"	–	"ELKAY" LUSTERTONE STAINLESS STEEL MODEL LRADQ172045, THREE HOLES 4" CENTER. FAUCET SHALL BE "AMERICAN STANDARD" MONTERREY #7500.174, WRIST BLADE HANDLES AND BELOW DECK THERMOSTATIC MIXING VALVE, FLOW RATE 0.35-GPM. PROVIDE "TRUEBRO" INSULATING KIT FOR WASTE & HW SUPPLY, TRIMS & SUPPLIES.
SK 2	SINK	2"	2"	1-1/2"	3/4"	3/4"	–	"ELKAY" MODEL EWSFAD13620 STAINLESS STEEL WASH SINK CENTER SINGLE HOLE 16" GAUGE SLANT FRONT SCRUB-UP SINK. WITH "CHICAGO" FAUCET MODEL 116.414.AB.1 DUAL BEAM INFRARED 6 VOLT BATTERY POWERED SENSOR ACTIVATED WITH "CHICAGO" GN2FCJKABCP RIGID/SWING GOOSENECK SPOUT-PLAIN END, COMPLETE WITH "ELKAY" DRAIN LK18B.
SH 1	SHOWER ACCESSIBLE	2"	2"	1-1/2"	3/4"	3/4"	–	"LEONARD" SHOWERMASTER #7600VP-515P-D-2L-H-06-1.5-D, THERMOSTATIC AND PRESSURE MIXING VALVE, HAND HELD SPRAY, DIVERTERS, FIXED SHOWER HEAD, FLOW RATE 1.5-GPM.
SHD 1	SHOWER DRAIN	2"	2"	1-1/2"	–	1/2"TP	–	"J.R. SMITH" FIG. 2005Y-P050-PB CAST IRON BODY COMPLETE WITH FLASHING COLLAR, NO HUB CONNECTION, TRAP PRIMER CONNECTION, ADJUSTABLE POLISHED BRONZE STRAINER HEAD OR APPROVED EQUAL.
FD 1	FLOOR DRAIN	2"	2"	1-1/2"	–	1/2"TP	–	"J.R. SMITH" FIG. 2005Y-P050-PB CAST IRON BODY COMPLETE WITH FLASHING COLLAR, NO HUB CONNECTION, TRAP PRIMER CONNECTION, ADJUSTABLE POLISHED BRONZE STRAINER HEAD OR APPROVED EQUAL.
TP 1	TRAP PRIMER	–	–	–	–	1/2"	–	TRAP PRIMER SHALL BE PPP INC. "PRIME-RITE" #PR-500 COMPLETE WITH DISTRIBUTION #DU-X UNIT AS REQUIRED OR APPROVED EQUAL BY MIFAB OR SIOUX CHIEF. PROVIDE ACCESS PANEL AND SHUT-OFF VALVE FOR EACH ASSEMBLY.
GD 1	GARBAGE DISPOSER	–	–	–	–	–	–	"INSINKERATOR" EVOLUTION SERIES 3/4 H.P.; 8.1 AMPS; 120V,1PH,60HZ. OPERATING WT=19.5 LBS.

DOMESTIC INSTANTANEOUS ELECTRIC HOT WATER HEATER SCHEDULE

SYMBOL	DESCRIPTION	LOCATION	MANUFACTURER & MODEL NUMBER	RECOVERY TEMP RISE @ 0.75 GPM	ELECTRICAL REQUIREMENTS KW	VOLTS	PHASE	HERTZ	OPERATING WEIGHT (LBS.)	REMARKS
IWH 1	WATER HEATER INSTANTANEOUS	STAFF LOUNGE/ BREAKROOM 3F-03 SL001	"CHRONOMITE" M-20L / 208	38	4.15	208	1	60	10	20 AMPS, PROVIDE WITH WIRES AND J-BOX.

THERMOSTATIC MIXING VALVE SCHEDULE

SYMBOL	DESCRIPTION	LOCATION	MANUFACTURER & MODEL NUMBER	CW IN	HW IN	HW/TW OUT	REMARKS
TMV 1	THERMOSTATIC MIXING VALVE	FOR SK-1 & SK-2	"LEONARD" 170-LF-BP-BRKT	3/4"	3/4"	3/4"	LEAD FREE THERMOSTATIC POINT OF USE MIXING VALVE WITH COLD WATER BY-PASS AND MOUNTING BRACKET. SET MIXING VALVE TEMPERATURE AT 105°F MIN. AND 110°F MAX.

MEDICAL GASES ZONE VALVE BOX ASSEMBLY

SYMBOL	MANUFACTURER & MODEL NO.	LOCATION	VALVE SIZE IN	ELECTRICAL REQ'D VOLTS	PHASE	HERTZ	REMARKS
ZVB 1	BEACONMEDAES SSB-821-01 ZVB-6-AAAABB-ENG	(E)CORRIDOR	1/2"x1/2"x1/2"x1/2"x3/4"x3/4"	–	–	–	

A SPECIAL INSPECTION OF THE MEDICAL GAS SYSTEM IS REQUIRED TO BE PERFORMED BY A QUALIFIED PROFESSIONAL.
RETAIN THE COMPLETED FORM ON SITE FOR REVIEW BY THE FIRE/BUIDING INSPECTOR

MEDICAL GASES ALARM

SYMBOL	MANUFACTURER & MODEL NO.	LOCATION	VALVE SIZE IN	ELECTRICAL REQ'D VOLTS	AMP	HERTZ	REMARKS
MGA 1	BEACONMEDAES SSB-835-01	ROBOTIC OR 3F-33 OROS1	–	120	0.25	60	AREA ALARM PANEL. CONNECT TO NEAREST (E) MASTER ALARM PANEL, EMERGENCY POWER. BACNET COMPATIBLE.

MEDICAL GASES CEILING OUTLET

SYMBOL	MANUFACTURER & MODEL NO.	LOCATION	VALVE SIZE IN	REMARKS
CLNGA 1	BEACONMEDAES SSB-840-15	ROBOTIC OR 3F-33 OROS1	–	--

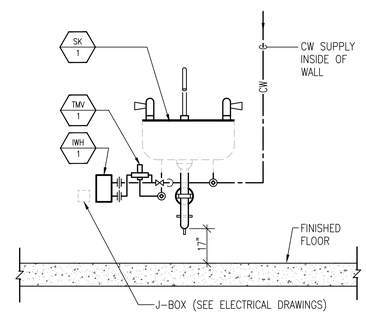

ELECTRIC INSTANTANEOUS HOT WATER HEATER N.T.S. 2

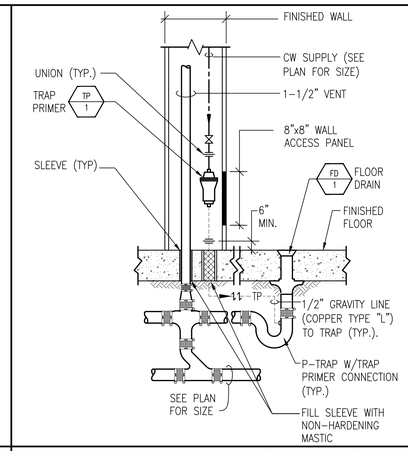

TRAP PRIMER ASSEMBLY N.T.S. 1

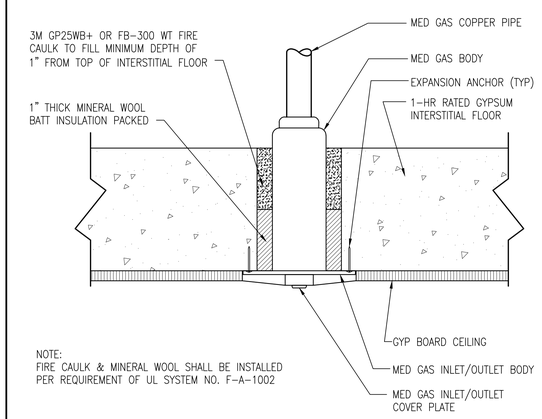

NOTE:
FIRE CAULK & MINERAL WOOL SHALL BE INSTALLED PER REQUIREMENT OF UL SYSTEM NO. F-A-1002

MEDICAL GAS CEILING OUTLET N.T.S. 3

CONSTRUCTION DOCUMENTS
FULLY SPRINKLERED

F9

No.	Description	Date
1	SCHEMATIC DESIGN (SD)	10/20/2015
2	DESIGN DEVELOPMENT (DD)	01/18/2016
3	CONSTRUCTION DOCUMENTS (CD)	03/30/2016

CONSULTANTS:

15371 dHA + CALPEC
150 S. ARROYO PARKWAY
SUITE NO. 100
PASADENA, CA. 91105
TEL: (626) 445-8580
FAX: (626) 445-8081

Seals and Signatures

REGISTERED PROFESSIONAL ENGINEER KEVIN TROY GUDE NO. 31496 MECHANICAL STATE OF CALIFORNIA
Exp 12-31-16

ARCHITECTS/ENGINEERS:

LEO A DALY
PLANNING ARCHITECTURE ENGINEERING INTERIORS
550 South Hope Street, 27th Floor
Los Angeles, California 90071, USA
213-629-0100 F213-629-0070
EST. 1915

Drawing Title: PLUMBING EQUIPMENT, FIXTURE SCHEDULES AND DEATILS

Approved: Project Director

Project Title: CONSTRUCT OPERATING ROOM #8

Location: 11201 BENTON STREET, LOMA LINDA, CA 92357

Date: 3/30/2016 | Checked: KG | Drawn: dHA+CALPEC

Project Number: 605-14-640

Building Number: 1

Drawing Number: PL002

Dwg. of

Office of Construction and Facilities Management

Department of Veterans Affairs

VA FORM 08-6231

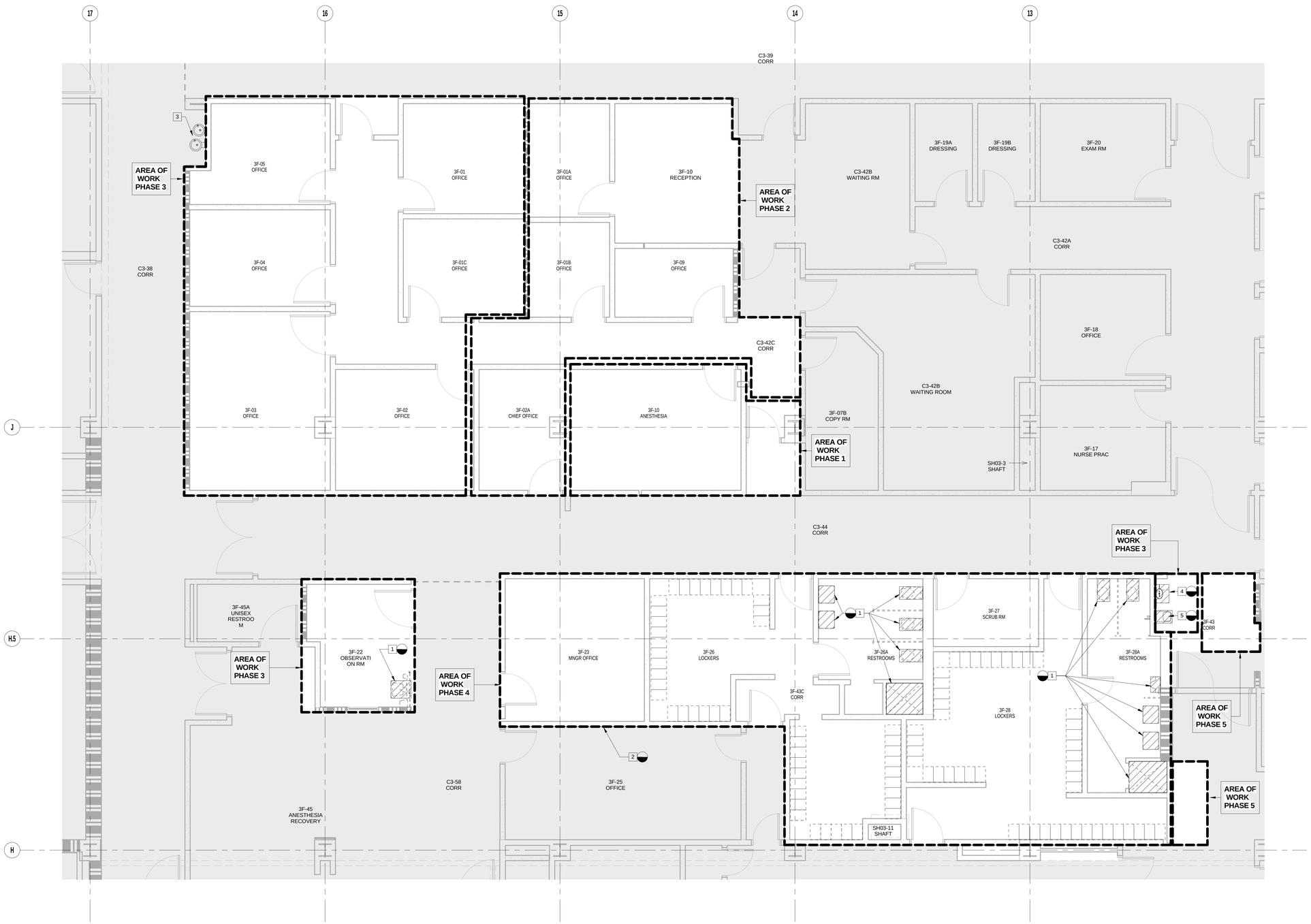

DEMOLITION NOTES

1. REMOVE ALL (E) FIXTURE AND ANY RELATED ITEM. CUT AND REMOVE (E)CW,(E)V, (E)O2, (E)MA, & (E)MV ABV THE CEILING IN INTERSTITIAL SPACE TO THE NEAREST MAIN BRANCH.
   CUT AND REMOVE (E)HW ABV THE CEILING IN INTERSTITIAL SPACE TO THE MAIN LOOP. NO DEAD LEG ALLOWED.
   CUT AND REMOVE (E)S, (E)W & (E)TP BEL FLR IN 3RD FLR INTERSTITIAL SPACE TO THE NEAREST MAIN BRANCH.
2. REMOVE (E)MED GAS ALARM PANEL AND ANY RELATED ITEM.
3. EXISTING FIXTURE TO REMAIN.
4. REMOVE (E)DF AND STORE AWAY IN SAVE LOCATION FOR REINSTALLATION. CUT AND REMOVE (E)CW, (E)HW & (E)V ABV THE CEILING IN INTERSTITIAL SPACE TO THE NEAREST MAIN BRANCH.
   CUT AND REMOVE (E)S OR (E)W BEL FLR IN 3RD FLR INTERSTITIAL SPACE TO THE NEAREST MAIN BRANCH. SEE ARCH DWG'S FOR EXACT LOCATION
5. REMOVE (E)EYEWASH AND STORE AWAY IN SAVE LOCATION FOR REINSTALLATION. CUT AND REMOVE (E)CW, (E)HW & (E)V ABV THE CEILING IN INTERSTITIAL SPACE TO THE NEAREST MAIN BRANCH.
   CUT AND REMOVE (E)S OR (E)W BEL FLR IN 3RD FLR INTERSTITIAL SPACE TO THE NEAREST MAIN BRANCH. SEE ARCH DWG'S FOR EXACT LOCATION

EXACT SIZE, ELEVATION, & LOCATION OF EXISTING SHALL BE FIELD VERIFIED.

F1 PLUMBING DEMOLITION PLAN - LEVEL 3 - AREA D
SCALE: 1/4" = 1'-0"

SCALE : 1/4" = 1'-0"

A	B
C	D
E	F
G	H

CONSTRUCTION DOCUMENTS
FULLY SPRINKLERED

No.	Description	Date
1	SCHEMATIC DESIGN (SD)	09/18/2015
2	DESIGN DEVELOPMENT (DD)	01/18/2016
3	CONSTRUCTION DOCUMENTS(CD)	03/30/2016

CONSULTANTS:

15371 dHA + CALPEC
150 S. ARROYO PARKWAY
SUITE NO. 100
PASADENA, CA. 91105
TEL: (626) 445-8580
FAX: (626) 445-8081

Seals and Signatures

REGISTERED PROFESSIONAL ENGINEER KEVIN S. CHEK M-31154 Exp. 12/31/17 MECHANICAL STATE OF CALIFORNIA

ARCHITECTS/ENGINEERS:

LEO A DALY
PLANNING ARCHITECTURE ENGINEERING INTERIORS
550 South Hope Street, 27th Floor
Los Angeles, California 90071, USA
213-629-0100 F213-629-0070
EST. 1915

Drawing Title: PLUMBING DEMOLITION PLAN - LEVEL 3 - AREA D

Approved: Project Director

Project Title: CONSTRUCT OPERATING ROOM #8

Location: 11201 BENTON STREET, LOMA LINDA, CA 92357

Date: 3/30/2016 | Checked: Checker | Drawn: Author

Project Number: 605- 14-640

Building Number:

Drawing Number: PD101

Office of Construction and Facilities Management

Department of Veterans Affairs

VA FORM 08-6231

3/24/2016 5:48:06 PM C:\Users\TonyC\Documents\X-MECH VA LL OR RELOCATION_TonyC.rvt

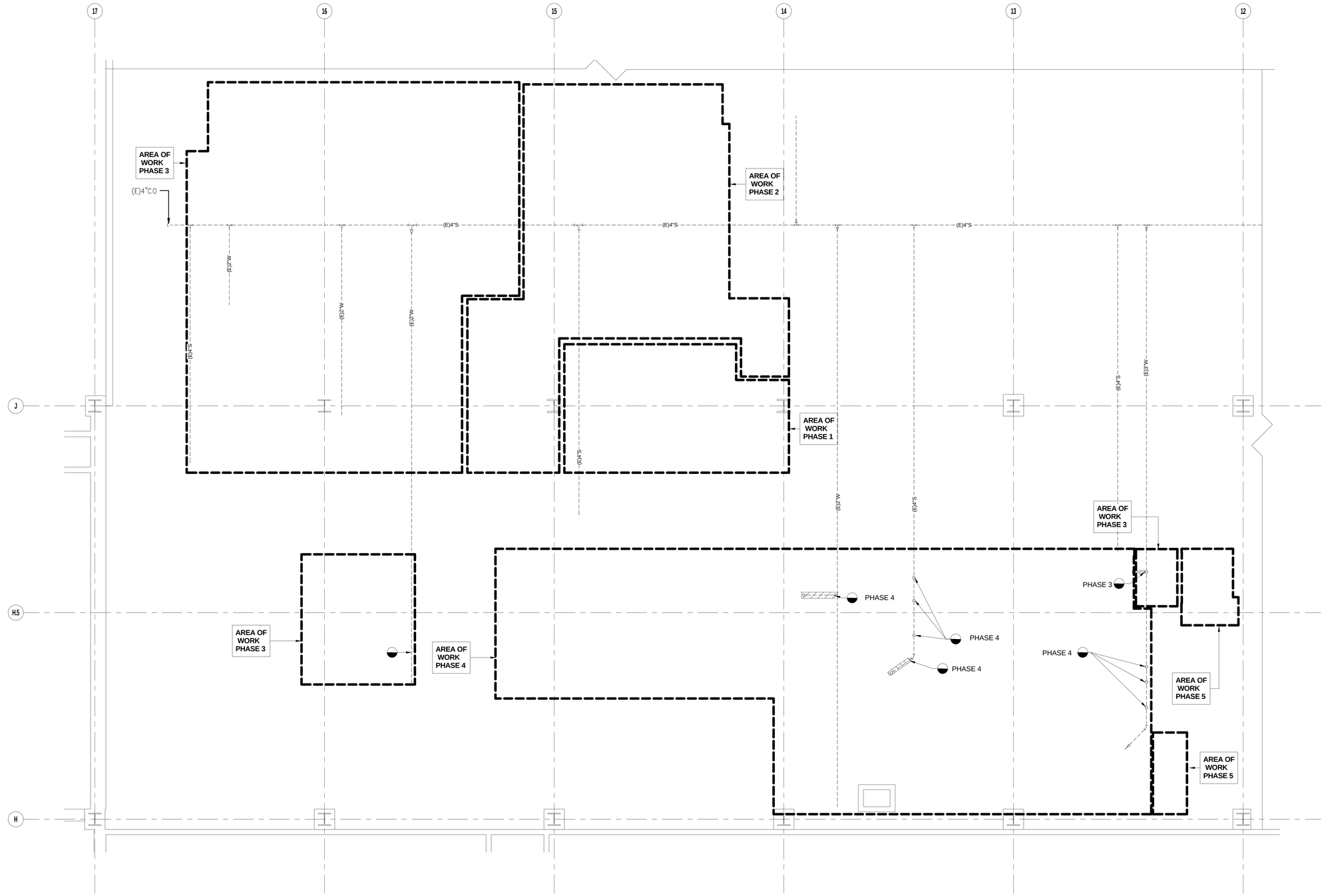

F1 PLUMBING INTERSTITIAL DEMOLITION PLAN - LEVEL 2P - AREA D
SCALE: 1/4" = 1'-0"

N

0 2' 4' 8'
SCALE : 1/4" = 1'-0"

A	B
C	D
E	F
G	H

CONSTRUCTION DOCUMENTS
FULLY SPRINKLERED

No.	Description	Date
1	SCHEMATIC DESIGN (SD)	09/18/2015
2	DESIGN DEVELOPMENT (DD)	01/18/2016
3	CONSTRUCTION DOCUMENTS(CD)	03/30/2016

CONSULTANTS:

15371 dHA + CALPEC
150 S. ARROYO PARKWAY
SUITE NO. 100
PASADENA, CA. 91105
TEL: (626) 445-8580
FAX: (626) 445-8081

Seals and Signatures

REGISTERED PROFESSIONAL ENGINEER
KEVIN S. CHEK
M-31154
Exp. 12/31/17
MECHANICAL
STATE OF CALIFORNIA

ARCHITECTS/ENGINEERS:

LEO A DALY
PLANNING
ARCHITECTURE
ENGINEERING
INTERIORS
550 South Hope Street, 27th Floor
Los Angeles, California 90071, USA
213-629-0100 F213-629-0070
EST. 1915

Drawing Title
PLUMBING DEMOLITION INTERSTITIAL PLAN LEVEL 2P - AREA D (SOIL & WASTE)

Approved: Project Director

Project Title
CONSTRUCT OPERATING ROOM #8

Location
11201 BENTON STREET, LOMA LINDA, CA 92357

Date 3/30/2016
Checked Checker
Drawn Author

Project Number 605- 14-640
Building Number
Drawing Number PD102

Office of Construction and Facilities Management
Department of Veterans Affairs

VA FORM 08-6231

3/24/2016 5:48:07 PM C:\Users\TonyC\Documents\X-MECH VA LL OR RELOCATION_TonyC.rvt

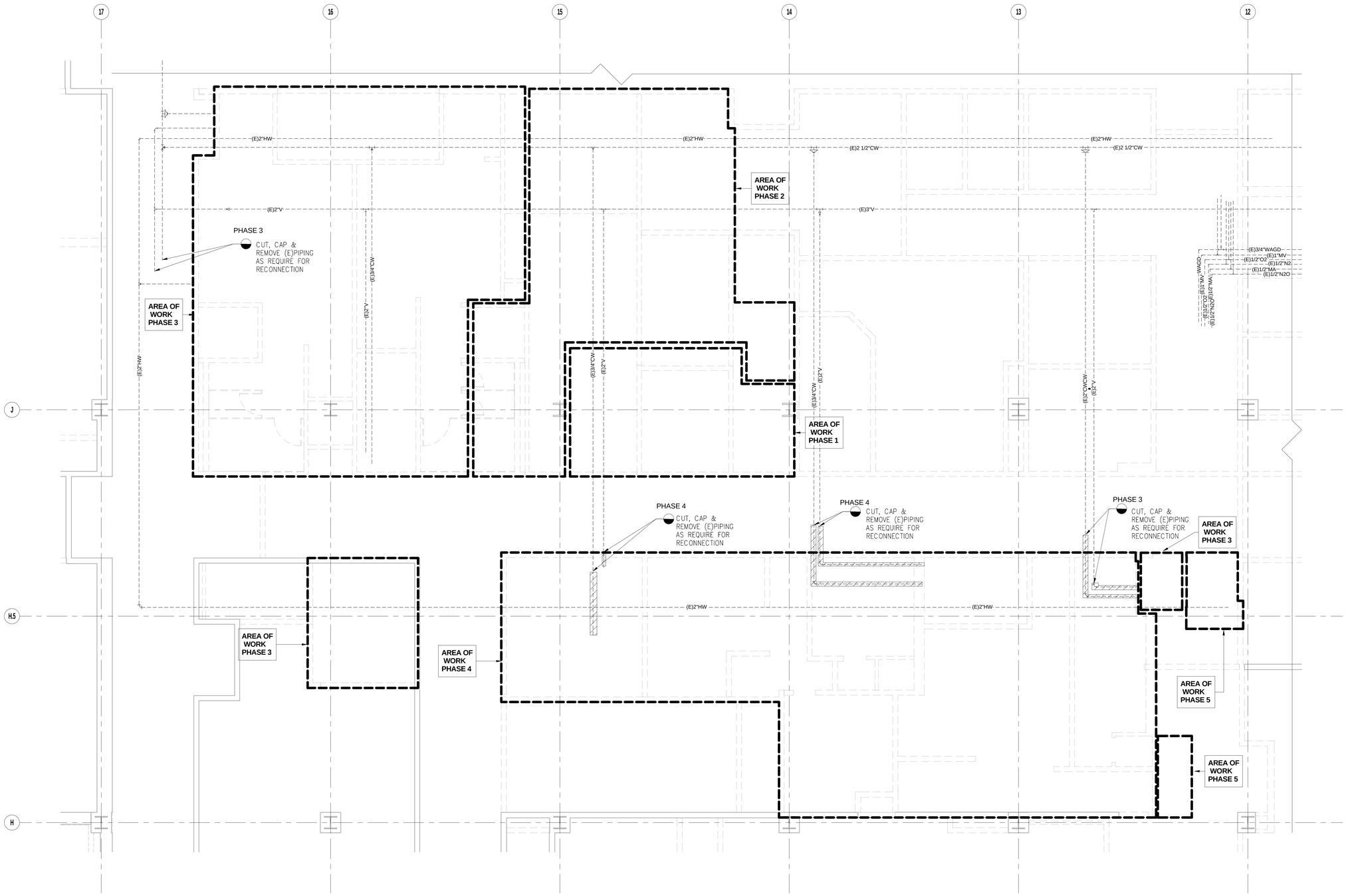

F1 **PLUMBING INTERSTITIAL DEMOLITION PLAN - LEVEL 3 - AREA D**
SCALE: 1/4" = 1'-0"

N

0 2' 4' 8'
SCALE : 1/4" = 1'-0"

A	B
C	D
E	F
G	H

CONSTRUCTION DOCUMENTS
FULLY SPRINKLERED

No.	Description	Date
1	SCHEMATIC DESIGN (SD)	09/18/2015
2	DESIGN DEVELOPMENT (DD)	01/18/2016
3	CONSTRUCTION DOCUMENTS(CD)	03/30/2016

CONSULTANTS:

15371
dHA + CALPEC
150 S. ARROYO PARKWAY
SUITE NO. 100
PASADENA, CA. 91105
TEL: (626) 445-8580
FAX: (626) 445-8081

Seals and Signatures

REGISTERED PROFESSIONAL ENGINEER
KEVIN S. CHEN
M-31154
Exp. 12/31/17
MECHANICAL
STATE OF CALIFORNIA

ARCHITECTS/ENGINEERS:

LEO A DALY
PLANNING
ARCHITECTURE
ENGINEERING
INTERIORS
550 South Hope Street, 27th Floor
Los Angeles, California 90071, USA
213-629-0100 F213-629-0070
EST. 1915

Drawing Title
PLUMBING DEMOLITION INTERSTITIAL PLAN - LEVEL 3 - AREA D

Approved: Project Director

Project Title
CONSTRUCT OPERATING ROOM #8

Location
11201 BENTON STREET, LOMA LINDA, CA 92357

Date: 3/30/2016
Checked: Checker
Drawn: Author

Project Number: 605- 14-640
Building Number:
Drawing Number: PD103

Office of Construction and Facilities Management
Department of Veterans Affairs

VA FORM 08-6231

3/24/2016 5:48:08 PM C:\Users.TonyC.Documents\X-MECH VA LL OR RELOCATION_TonyC.rvt

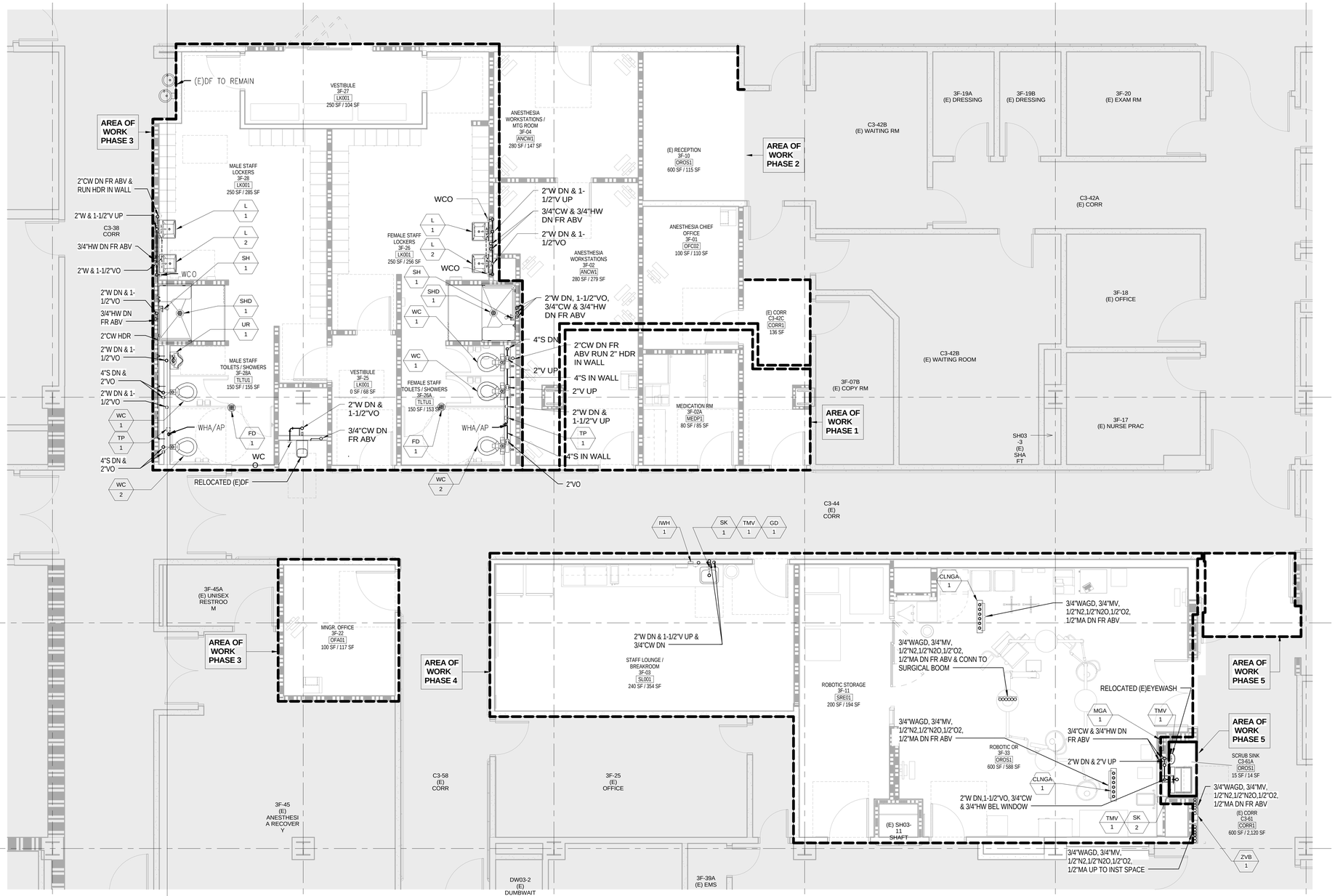

F1 PLUMBING FLOOR PLAN - LEVEL 3 - AREA D

SCALE: 1/4" = 1'-0"

N

0 2' 4' 8'

SCALE : 1/4" = 1'-0"

A	B
C	D
E	F
G	H

CONSTRUCTION DOCUMENTS
FULLY SPRINKLERED

No.	Description	Date
1	SCHEMATIC DESIGN (SD)	09/18/2015
2	DESIGN DEVELOPMENT (DD)	01/18/2016
3	CONSTRUCTION DOCUMENTS(CD)	03/30/2016

CONSULTANTS:

15371 dHA + CALPEC
150 S. ARROYO PARKWAY
SUITE NO. 100
PASADENA, CA. 91105
TEL: (626) 445-8580
FAX: (626) 445-8081

Seals and Signatures

REGISTERED PROFESSIONAL ENGINEER KEVIN S. CHEN M-31154 Exp. 12/31/17 MECHANICAL STATE OF CALIFORNIA

ARCHITECTS/ENGINEERS:

LEO A DALY
PLANNING ARCHITECTURE ENGINEERING INTERIORS
550 South Hope Street, 27th Floor
Los Angeles, California 90071, USA
213-629-0100 F213-629-0070
EST. 1915

Drawing Title: PLUMBING FLOOR PLAN - LEVEL 3 - AREA D

Approved: Project Director

Project Title: CONSTRUCT OPERATING ROOM #8

Location: 11201 BENTON STREET, LOMA LINDA, CA 92357

Date: 3/30/2016 | Checked: Checker | Drawn: Author

Project Number: 605- 14-640

Building Number:

Drawing Number: PL101

Office of Construction and Facilities Management

Department of Veterans Affairs

VA FORM 08-6231

3/24/2016 5:48:16 PM C:\Users\TonyC\Documents\X-MECH VALL OR RELOCATION_TonyC.rvt

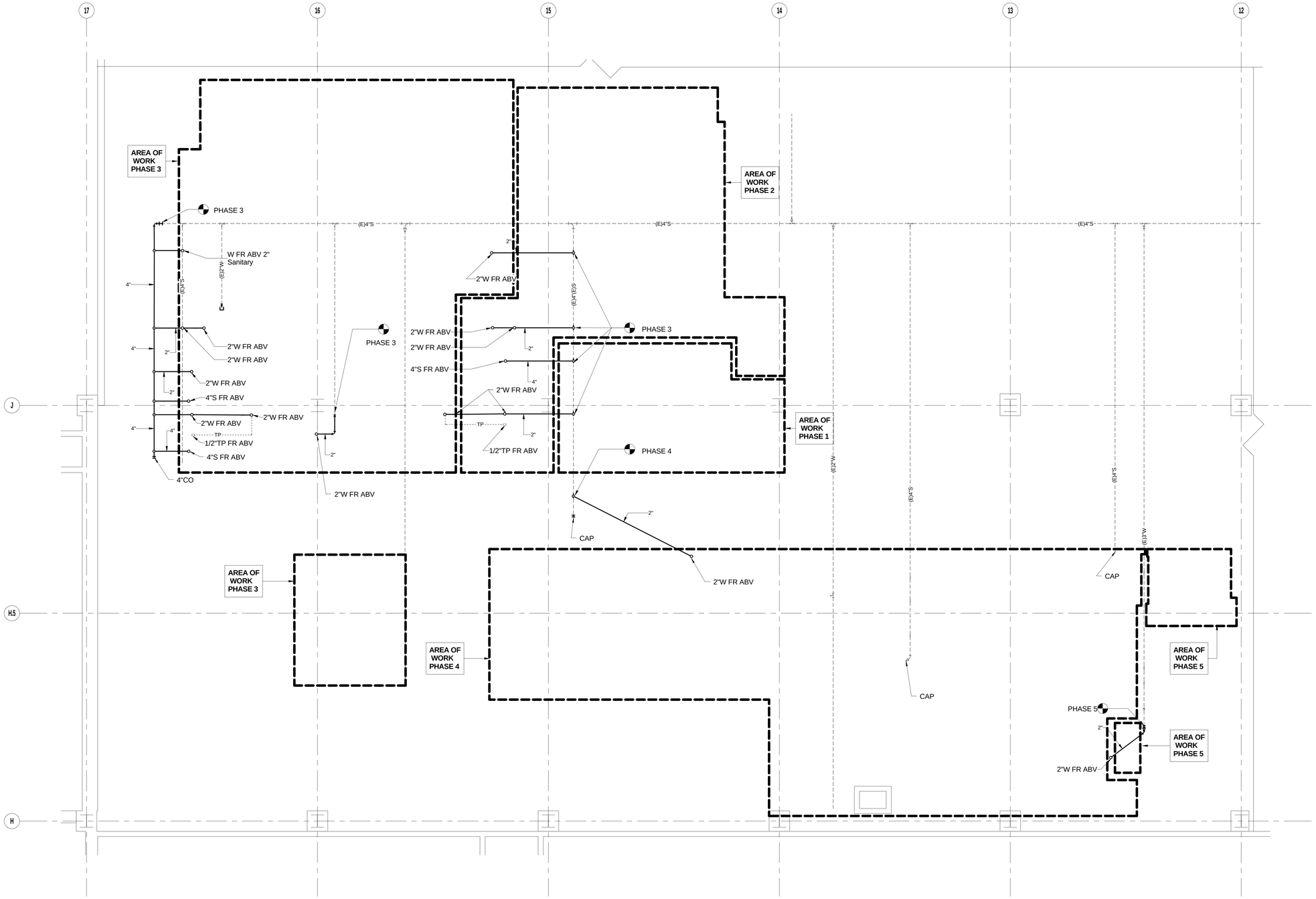

F1 PLUMBING INTERSTITIAL PLAN - LEVEL 2P - AREA D
SCALE: 1/4" = 1'-0"

N

0 2' 4' 8'
SCALE : 1/4" = 1'-0"

A	B
C	D
E	F
G	H

CONSTRUCTION DOCUMENTS FULLY SPRINKLERED

No.	Description	Date
1	SCHEMATIC DESIGN (SD)	09/18/2015
2	DESIGN DEVELOPMENT (DD)	01/18/2016
3	CONSTRUCTION DOCUMENTS(CD)	03/30/2016

CONSULTANTS:

15371
dHA + CALPEC
150 S. ARROYO PARKWAY
SUITE NO. 100
PASADENA, CA. 91105
TEL: (626) 445-8580
FAX: (626) 445-8081

Seals and Signatures

REGISTERED PROFESSIONAL ENGINEER
KEVIN S. CHEN
M-31154
Exp. 12/31/17
MECHANICAL
STATE OF CALIFORNIA

ARCHITECTS/ENGINEERS:

LEO A DALY
PLANNING
ARCHITECTURE
ENGINEERING
INTERIORS
550 South Hope Street, 27th Floor
Los Angeles, California 90071, USA
213-629-0100 F213-629-0070
EST. 1915

Drawing Title: PLUMBING INTERSTITIAL PLAN - LEVEL 2P - AREA D (SOIL & WASTE)

Approved: Project Director

Project Title: CONSTRUCT OPERATING ROOM #8

Location: 11201 BENTON STREET, LOMA LINDA, CA 92357

Date: 3/30/2016 | Checked: Checker | Drawn: Author

Project Number: 605- 14-640

Building Number:

Drawing Number: PL102

Office of Construction and Facilities Management

Department of Veterans Affairs

VA FORM 08-6231

3/24/2016 5:48:16 PM C:\Users\TonyC\Documents\X-MECH VA LL OR RELOCATION_TonyC.rvt

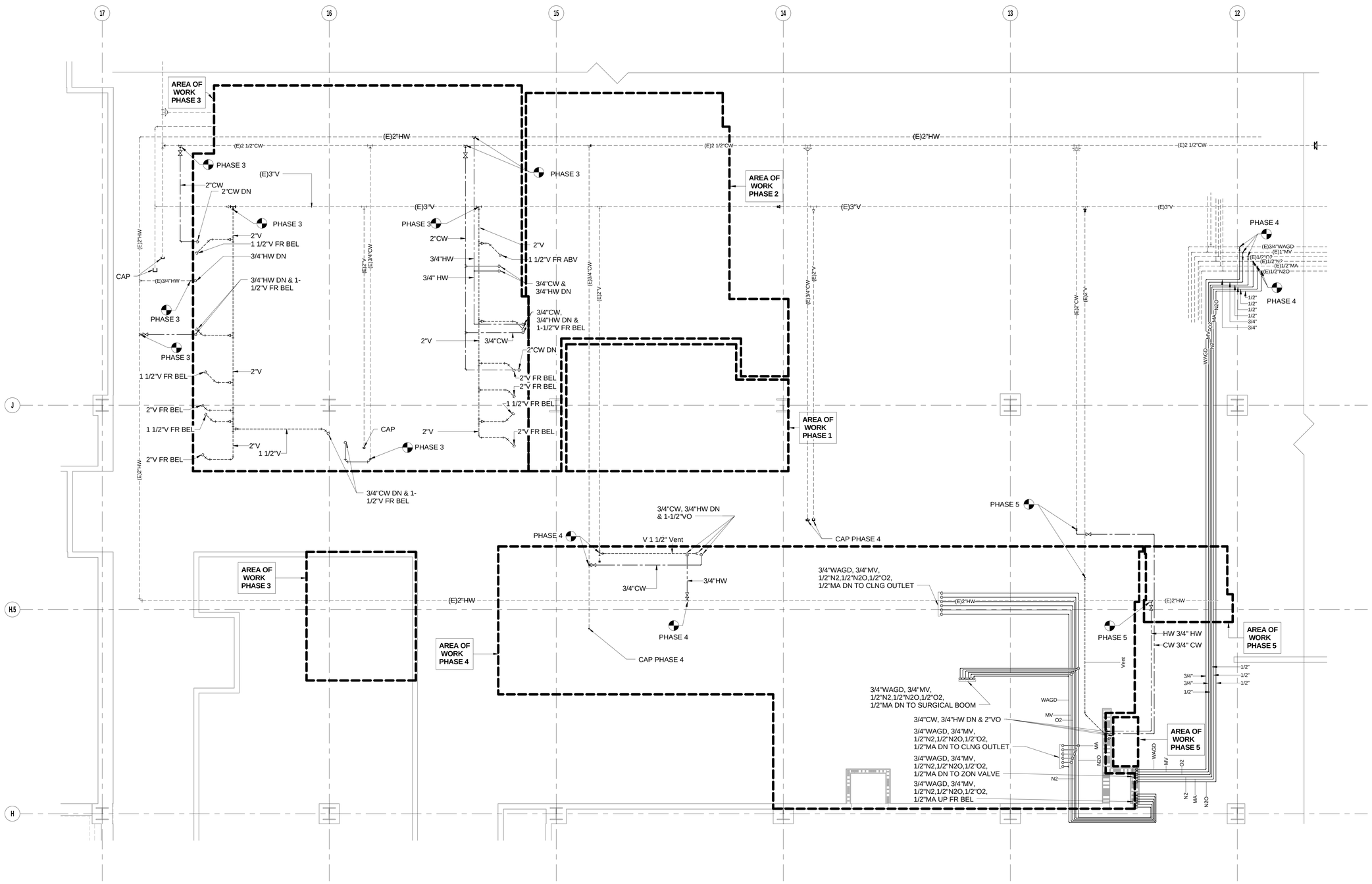

F1 PLUMBING INTERSTITIAL PLAN - LEVEL 3 - AREA D

SCALE: 1/4" = 1'-0"

N

0 2' 4' 8'

SCALE : 1/4" = 1'-0"

A	B
C	D
E	F
G	H

CONSTRUCTION DOCUMENTS
FULLY SPRINKLERED

No.	Description	Date
1	SCHEMATIC DESIGN (SD)	09/18/2015
2	DESIGN DEVELOPMENT (DD)	01/18/2016
3	CONSTRUCTION DOCUMENTS(CD)	03/30/2016

CONSULTANTS:

15371 dHA + CALPEC
150 S. ARROYO PARKWAY
SUITE NO. 100
PASADENA, CA. 91105
TEL: (626) 445-8580
FAX: (626) 445-8081

Seals and Signatures

REGISTERED PROFESSIONAL ENGINEER KEVIN S. CHEN M-31154 Exp. 12/31/17 MECHANICAL STATE OF CALIFORNIA

ARCHITECTS/ENGINEERS:

LEO A DALY
550 South Hope Street, 27th Floor
Los Angeles, California 90071, USA
213-629-0100 F213-629-0070

PLANNING ARCHITECTURE ENGINEERING INTERIORS

EST. 1915

Drawing Title: PLUMBING INTERSTITIAL PLAN - LEVEL 3 - AREA D

Approved: Project Director

Project Title: CONSTRUCT OPERATING ROOM #8

Location: 11201 BENTON STREET, LOMA LINDA, CA 92357

Date: 3/30/2016 | Checked: Checker | Drawn: Author

Project Number: 605- 14-640

Building Number:

Drawing Number: PL103

Office of Construction and Facilities Management

Department of Veterans Affairs

VA FORM 08-6231

3/24/2016 5:48:18 PM C:\Users\TonyC\Documents\X-MECH VA LL OR RELOCATION_TonyC.rvt

GENERAL NOTES

A. GENERAL:

1. SCOPE OF THE PROJECT INCLUDES WORK SHOWN ON THE DRAWINGS AND IN THE SPECIFICATIONS.
2. WORK SHOWN ON THE DRAWINGS IS INCLUSIVE, WHETHER SHOWN AT EACH LOCATION OR NOT, AS LONG AS IT IS SHOWN IN ONE LOCATION ON THE DRAWINGS OR IN THE SPECIFICATIONS WORK SHALL BE PROVIDED.
3. THE CONTRACT DRAWINGS AND SPECIFICATIONS REPRESENT THE FINISHED WORK. THEY DO NOT INDICATE THE METHOD OF CONSTRUCTION. CONTRACTOR SHALL SUPERVISE AND DIRECT THE WORK AND SHALL BE RESPONSIBLE FOR CONSTRUCTION MEANS AND METHODS, TECHNIQUES, SEQUENCES AND PROCEDURES.
4. THESE DRAWINGS ARE DIAGRAMMATIC. THE CONTRACTOR SHALL ASSUME FULL RESPONSIBILITY OF COORDINATION WITH VARIOUS TRADES AND INCLUDE TURNS, BENDS, ADDITIONAL LENGTHS OF DUCTS, PIPING AND ELEVATION CHANGES, AND TRANSITIONS WITHOUT ADDITIONAL COST TO THE OWNER.
5. THE CONTRACTOR MUST EXAMINE CONSTRAINTS AND THE AVAILABLE SPACE AT THE JOB SITE THAT MAY REQUIRE CUSTOM FABRICATION OR DISASSEMBLY AND RE-ASSEMBLY OF CERTAIN EQUIPMENT.
6. PROTECT MATERIALS INCLUDING DUCTS AND PIPES FROM DUST AND DEBRIS AND KEEP OPEN END OF PIPES AND DUCTS COVERED UNTIL READY FOR INSTALLATION OF NEXT SEGMENT OF WORK. LINED DUCTS THAT ARE DIRTY WILL NOT BE ACCEPTABLE.
7. WORK DAMAGED OR CUT INTO DURING CONSTRUCTION SHALL BE PATCHED, REPAIRED, PAINTED AND FINISHED TO MATCH EXISTING ADJACENT SURFACES IN TEXTURE, COLOR, AND FINISH.
8. MECHANICAL EQUIPMENT, MATERIALS, AND INSTALLATION SHALL BE IN ACCORDANCE WITH THE 2010 CALIFORNIA BUILDING CODE, CALIFORNIA MECHANICAL CODE, CALIFORNIA ENERGY CODE, CALIFORNIA PLUMBING CODE AND CALIFORNIA FIRE CODE.
9. INSULATION SHALL COMPLY WITH THE REQUIREMENTS OF CALIFORNIA ENERGY CODE AND PROJECT SPECIFICATIONS, WHICHEVER IS MORE STRINGENT.
10. AIR CONDITIONING UNITS SHALL BE CERTIFIED PER THE REQUIREMENTS OF THE CALIFORNIA ENERGY COMMISSION.
11. WORK TO BE INSTALLED OUTDOORS; INCLUDING, BUT NOT LIMITED TO; EQUIPMENT, DUCTS, PIPING, CONTROL DEVICES, SMOKE DETECTORS, AND VARIABLE FREQUENCY DRIVES SHALL BE COMPLETELY WEATHERPROOFED.
12. CURBS, ROOF JACKS AND EQUIPMENT SUPPORT PADS SHALL BE COMPATIBLE WITH ROOFING SYSTEM. FLASH AND COUNTERFLASH WEATHER EXPOSED ROOF OPENINGS. REFER TO ARCHITECTURAL DRAWINGS FOR REQUIRED FLASHING DETAILS.
13. CUTTING, BORING, SAWCUTTING OR DRILLING THROUGH NEW OR EXISTING STRUCTURAL ELEMENTS SHALL BE DONE ONLY WHEN SO DETAILED ON THE STRUCTURAL DRAWINGS. COORDINATE EXACT LOCATION OF CORE DRILLING, CUTTING OF FLOOR SLAB, OR WALLS OF THE BUILDING WITH THE STRUCTURAL DRAWINGS. DO NOT CUT OR DRILL HOLES IN ANY STRUCTURAL ELEMENT WITHOUT APPROVAL OF THE ARCHITECT.
14. COORDINATE TEMPERATURE SENSOR AND THERMOSTAT LOCATION WITH FLOOR ARCHITECTURAL AND FURNITURE FLOOR PLANS. TEMPERATURE SENSOR AND THERMOSTAT ELEVATION SHALL BE 46-INCH ABOVE FINISHED FLOOR AT CENTERLINE OF THE DEVICE AND IN COMPLIANCE WITH ADA.
15. ROOM THERMOSTATS SHALL HAVE THE CAPABILITY TO SEQUENCE HEATING AND COOLING, AND TO TERMINATE HEATING AT 70°F. THE HEATING SETPOINT MUST BE ADJUSTABLE DOWN TO 55°F OR HIGHER.
16. CONDITIONS THAT, IN THE CONTRACTOR'S OPINION, PREVENT THE EXECUTION OF THE WORK AS INTENDED SHALL BE BROUGHT TO THE ATTENTION OF THE ARCHITECT IN THE FORM OF AN RFI BEFORE BEGINNING THE WORK IN QUESTION.
17. WORK PERFORMED UNDER THIS CONTRACT IS SUBJECT TO INSPECTION BY THE BUILDING OWNER, ARCHITECT, AND ENGINEER FOR CONFORMITY WITH EXISTING BUILDING SYSTEMS, QUALITY OF PRODUCTS AND INSTALLATION. CONTRACTOR SHALL NOT PERFORM WORK THAT MAY ADVERSELY AFFECT THE EXISTING BUILDING SYSTEMS OPERATION, EITHER DUE TO IMPROPER INSTALLATION, INADEQUATE COORDINATION OR POOR WORKMANSHIP. WORK INSPECTED AND FOUND UNACCEPTABLE BY THE OWNER, ARCHITECT SHALL BE PROMPTLY REPLACED OR CORRECTED AT NO ADDITIONAL COST.
18. FIELD OBSERVATION AND SUPPORT SERVICES PERFORMED BY THE ENGINEER PRIOR TO, DURING, OR AFTER CONSTRUCTION ARE FOR THE PURPOSE OF ACHIEVING QUALITY CONTROL AND SHALL NOT BE CONSTRUED AS SUPERVISION OF CONSTRUCTION.
19. DUCTWORK AND PIPING PENETRATING SLAB TO SLAB PARTITIONS SHALL BE SEALED AIRTIGHT. A RESILIENT CAULKING AND PACKING SHALL BE USED. SEAL OPENINGS AROUND DUCTWORK AND PIPING PENETRATING FIRE RESISTIVE RATED WALLS AND FLOORS TO MAINTAIN RATING INTEGRITY.
20. PROVIDE ACCESS DOORS/PANELS REQUIRED FOR SERVICING LISTED ITEMS SUCH AS AIR TERMINAL UNITS, FIRE DAMPERS, COMBINATION SMOKE/FIRE DAMPERS, VOLUME DAMPERS, VALVES, AND DEVICES REQUIRING ACCESS WHETHER OR NOT SUCH ACCESS IS SHOWN ON DRAWINGS. COORDINATE EXACT LOCATION OF CEILING, WALL, OR FLOOR ACCESS PANELS WITH ARCHITECTURAL DRAWINGS.
21. IN THE EVENT THE CONTRACTOR ENCOUNTERS ASBESTOS OR ASBESTOS RELATED MATERIALS DURING PERFORMANCE OF WORK. WORK WITHIN THE AFFECTED AREA SHALL IMMEDIATELY STOP AND THE CONTRACTOR SHALL NOTIFY THE OWNER AND ARCHITECT. WORK WITHIN THE AFFECTED AREA SHALL NOT COMMENCE UNTIL ASBESTOS IS ABATED AND OWNER HAS GIVEN WRITTEN PERMISSION TO RESUME.

B. EQUIPMENT:

1. A MAINTENANCE LABEL SHALL BE AFFIXED TO MECHANICAL EQUIPMENT AND A MAINTENANCE MANUAL SHALL BE PROVIDED FOR THE OWNER'S USE.
2. INSTALL EQUIPMENT IN ACCESSIBLE LOCATION AND PROVIDE ADEQUATE SERVICE CLEARANCE FOR NORMAL MAINTENANCE WITHOUT REQUIRING REMOVAL OF MECHANICAL, ARCHITECTURAL, ELECTRICAL OR STRUCTURAL ELEMENTS.
3. FOR EQUIPMENT LOCATED ABOVE CEILING, INSTALL SUCH EQUIPMENT CLOSE ENOUGH TO THE CEILING ELEVATION TO FACILITATE READY ACCESS FOR MAINTENANCE AND SERVICING.
4. VERIFY ELECTRICAL CHARACTERISTICS WITH ELECTRICAL DRAWINGS PRIOR TO BID, MATERIAL PURCHASE, AND INSTALLATION.

C. DUCTWORK:

1. UNLESS OTHERWISE NOTED, DIMENSIONS FOR DUCTS, GRILLES, DAMPERS, ETC. ARE IN INCHES.
2. DUCTWORK DIMENSIONS ARE INSIDE FREE AREA.
3. DIMENSIONS OF ACOUSTICALLY LINED DUCTWORK AS SHOWN ON PLANS ARE CLEAR INSIDE DIMENSIONS. INCREASE SIZE OF DUCT BY THICKNESS OF ACOUSTICAL LINING.
4. EXPOSED DUCTWORK IN CONDITIONED SPACE SHALL BE INTERNALLY LINED WHETHER SHOWN ON THE DRAWINGS OR NOT.
5. MATERIAL EXPOSED WITHIN A DUCT OR PLENUM SHALL COMPLY WITH 2010 CALIFORNIA MECHANICAL CODE.
6. DUCTWORK LOCATED IN SHAFTS OR ENCLOSURES SHALL BE PRESSURE TESTED PER REQUIREMENTS STATED IN THE SPECIFICATIONS PRIOR TO BEING CONCEALED.
7. FOR EXACT LOCATIONS OF DIFFUSERS AND GRILLES, SEE ARCHITECTURAL DRAWINGS.
8. COORDINATE THE CORRECT TYPE OF CEILING DIFFUSER AND GRILLES MARGINS TO BE INSTALLED WITH CEILING SUSPENSION SYSTEM TO BE USED.
9. PROVIDE BUTTERFLY DAMPERS FOR ROUND DUCTS AND OPPOSED BLADE DAMPERS FOR RECTANGULAR DUCTS FOR ALL BRANCH TAKEOFFS.
10. MANUAL VOLUME DAMPERS SHALL BE PROVIDED FOR EACH AND EVERY AIR INLET AND OUTLET. LOCATE MANUAL VOLUME DAMPER AT BRANCH TAKE OFF FOR THE OUTLET, OR AS FAR FROM THE OUTLET AS POSSIBLE.
11. PROVIDE MANUAL VOLUME DAMPERS DUCTS CONNECTING TO DUCT RISER AT EACH FLOOR. LOCATE DAMPERS NEAR (BUT NOT INSIDE) THE SHAFT ENCLOSURE.
12. PROVIDE MANUAL VOLUME DAMPER REMOTE REGULATOR FOR THE MANUAL VOLUME DAMPER LOCATED ABOVE INACCESSIBLE CEILING AND AT THE LOCATION NOT READILY ACCESSIBLE. REFER TO SPECIFICATIONS FOR TYPE AND FLOOR PLANS FOR LOCATIONS.
13. COMBINATION FIRE/SMOKE DAMPERS SHALL BE FIRE MARSHALL APPROVED AND INSTALLED STRICTLY IN ACCORDANCE WITH THE MANUFACTURER'S INSTRUCTIONS. MANUFACTURER'S INSTRUCTIONS SHALL BE MADE AVAILABLE TO THE INSPECTING AUTHORITY.
14. PROVIDE DUCT ACCESS PANELS FOR COMBINATION FIRE/SMOKE DAMPERS.
15. PROVIDE DOUBLE RADIUS TURNING VANES IN RECTANGULAR 90° DUCT ELBOWS.
16. PROVIDE SPLITTER VANES IN RECTANGULAR RADIUS 90° DUCT ELBOWS WITH RADIUS TO WIDTH RATIO OF ONE OR LESS.
17. CIRCULAR METAL DUCTWORK SHALL BE SPIRAL WITH PRE-FABRICATED FITTINGS.
18. ROUND DUCT TAKEOFFS FROM RECTANGULAR DUCT SHALL BE MADE WITH FACTORY FABRICATED SPIN-IN OR CONICAL FITTINGS.
19. LOW PRESSURE FLEXIBLE DUCT LENGTH SHALL NOT EXCEED 6-FOOT AND NOT LESS THAN 4-FOOT. USE OF MEDIUM PRESSURE FLEXIBLE DUCT AT INLET TO AIR TERMINAL UNITS IS NOT PERMITTED. MINIMUM RADIUS SHALL BE 1.5 TIMES DIAMETER OF DUCT.
20. PROVIDE NECESSARY PLENUMS OR TRANSITIONS FOR FLEXIBLE DUCT CONNECTIONS TO DIFFUSERS AND REGISTERS.
21. PROVIDE 1-INCH THICK ACOUSTICAL DUCT LINER INSIDE THE FIRST 50-FOOT (MINIMUM) OF THE DUCT LEAVING OR RETURNING TO AIR HANDLING UNIT.
22. SUPPLY DIFFUSERS AND RETURN/EXHAUST GRILLES SHALL BE ALUMINUM IN SHOWER, TOILET, AND WHIRLPOOL ROOMS. EXHAUST DUCTS SERVING THESE ROOMS SHALL BE ALUMINUM DUCT. ALUMINUM DUCT SHALL BE SLOPED TOWARD GRILLES.
23. LOCATION OF POWER AND LOCAL DISCONNECTS FOR COMBINATION FIRE/SMOKE DAMPERS SHALL BE PROVIDED BY MECHANICAL CONTRACTOR UNLESS OTHERWISE INDICATED ON ELECTRICAL DRAWINGS.
24. EXPOSED DUCTWORK AND FITTINGS IN SYSTEM DESIGNATED FOR PAINTING SHALL BE SANDED AND SEALED IN PREPARATION FOR PAINTING.

D. PIPING:

1. PROVIDE HOSE END DRAIN VALVE ON PIPE STRAINERS.
2. LOCATE VALVES IN EASILY ACCESSIBLE LOCATIONS.
3. PROVIDE ISOLATING VALVES AND UNIONS ON PIPING ADJACENT TO CONTROL VALVES OR EQUIPMENT. LOCATE VALVES SO THE EQUIPMENT CAN BE REMOVED WITHOUT DISMANTLING BRANCH LINES.
4. BALANCING, FLOW, CONTROL AND AUTOMATIC FLOW LIMITERS SHALL BE INSTALLED PER MANUFACTURER'S RECOMMENDED UPSTREAM AND DOWNSTREAM STRAIGHT PIPE LENGTHS.
5. PROVIDE BALANCING VALVES WITH READOUT PORTS IN HYDRONIC PIPING CONNECTING TO PIPE RISERS AT EACH FLOOR. LOCATE VALVES NEAR (BUT NOT INSIDE) THE SHAFT ENCLOSURE.
6. INSTALL DRAIN VALVES AT LOW POINTS OF PIPING SYSTEM TO ENABLE COMPLETE DRAINAGE. PROVIDE AIR VENT AT EACH HIGH POINT IN THE PIPING SYSTEM.
7. SLOPE HYDRONIC PIPING FOR PROPER DRAINAGE AND ELIMINATION OF AIR.
8. PROVIDE CONDENSATE DRAIN PIPING WITH DRAINAGE FITTINGS FOR COOLING COILS AND ROUTE TO THE NEAREST APPROVED RECEPTOR.
9. SIZE REFRIGERANT PIPING PER MANUFACTURER'S REQUIREMENTS. PROVIDE NECESSARY RISER TRAPS AS REQUIRED TO ENSURE PROPER RETURN OF REFRIGERANT.

G. REMODEL:

1. DEMOLISHED MATERIALS SHALL BECOME THE PROPERTY OF THE CONTRACTOR WHO SHALL BE RESPONSIBLE FOR PROMPT DAILY REMOVAL FROM THE SITE. REMOVE DEBRIS FROM THE SITE RESULTING FROM THE WORK AT THE CONCLUSION OF DAILY CONSTRUCTION. REMOVE TEMPORARY CONSTRUCTION FROM THE SITE. THE AREA OF THE SITE SHALL BE LEFT BROOM CLEAN. IF NOT, UPON NOTIFICATION, OWNER WILL PERFORM NECESSARY CLEAN-UP WORK AND BACK CHARGE THE CONTRACTOR FOR THE EXPENSE THUS INCURRED.
2. MODIFICATIONS AND ADDITIONS TO THE HVAC SYSTEM AS INDICATED ON THE CONTRACT DRAWINGS ARE BASED UPON THE BEST AVAILABLE RECORDS AND SHALL BE CONSIDERED APPROXIMATE AND INCOMPLETE. BEFORE WORK IS STARTED. VERIFY AND COORDINATE ELEVATIONS, SIZES, AND POINTS OF CONNECTION FOR EXISTING HVAC SYSTEMS. DISCREPANCIES BETWEEN FIELD DATA AND DRAWINGS AND SPECIFICATIONS SHALL BE REPORTED TO THE ARCHITECT. DO NOT PROCEED WITH INSTALLATION IN AREA OF DISCREPANCIES UNTIL RESOLVED.
3. THE WORK TO BE PERFORMED UNDER THIS CONTRACT MUST MATCH THE EXISTING SYSTEM, EQUIPMENT, PRODUCT, AND INSTALLATION QUALITY, UNLESS OTHERWISE INDICATED IN THE CONTRACT DOCUMENTS.
4. EXERCISE CAUTION DURING PHASES OF THE WORK TO LOCATE, IDENTIFY AND PROTECT EXISTING DUCTWORK AND PIPING THAT ARE TO REMAIN. MAINTAIN SERVICES TO EXISTING OCCUPIED AREAS OR PROVIDE TEMPORARY SERVICES AS REQUIRED.
5. WORK SCHEDULE SHALL BE BASED UPON MINIMIZING DISRUPTIONS TO EXISTING BUILDING OPERATION.
6. CONTRACTOR SHALL PROVIDE DUST BARRIERS AS REQUIRED TO PREVENT CONTAMINATION OF THE EXISTING BUILDING FROM DUST AND DEBRIS. STATIC FREE DUST BARRIERS FORMED WITH PLASTIC SHEETS SHALL BE PROVIDED (USING FACILE OR GRIFFOLYN WITH FIRE RATING) WITH THE APPROVAL OF THE CONSTRUCTION MANAGER.
7. REMOVE DISCONNECTED OR ABANDONED PORTIONS OF EXISTING PIPING AS NECESSARY TO ALLOW FOR NEW CONSTRUCTION.

SEISMIC BRACING NOTES

1. CONTRACTOR TO PROVIDE SEISMIC ANCHORAGE AND BRACING FOR MECHANICAL EQUIPMENT THAT IS DIRECTLY MOUNTED ON THE FLOOR OR ROOF AND MECHANICAL EQUIPMENT THAT IS SUSPENDED FROM THE FLOOR, WALL OR SUPPORTED BY VIBRATION ISOLATORS IN COMPLIANCE WITH THE 2013 CALIFORNIA BUILDING CODE AND VA H-18-8 (AUG. 2013).
2. ANCHORAGE AND SUPPORTING STRUCTURAL ELEMENTS SHALL BE DESIGNED TO WITHSTAND THE LATERAL FORCES AS REQUIRED BY 2013 CALIFORNIA BUILDING CODE AND VA H-18-8 (AUG. 2013).
3. PROVIDE ANCHORAGE CALCULATIONS AND DETAILS CERTIFIED BY A STRUCTURAL ENGINEER REGISTERED IN THE STATE OF CALIFORNIA.
4. SEISMIC BRACING AND ANCHORAGE OF PIPING, DUCTWORK, AND SUSPENDED EQUIPMENT SHALL BE PROVIDED USING A SEISMIC RESTRAINT MANUAL: MASON INDUSTRIES "SEISMIC RESTRAINT GUIDELINES FOR SUSPENDED PIPING, DUCTWORK, AND ELECTRICAL SYSTEMS", I.S.A.T. "ENGINEERED SEISMIC BRACING OF SUSPENDED UTILITIES", OR APPROVED EQUAL.
   A. A COPY OF THE APPROVED SEISMIC RESTRAINT SYSTEMS INSTALLATION GUIDE/MANUAL SHALL BE PROVIDED BY THE CONTRACTOR PRIOR TO STARTING INSTALLATION AND KEPT ON THE JOB SITE.
   B. PROVIDE SHOP DRAWINGS SHOWING HOW PRE-APPROVED SYSTEM WILL BE APPLIED TO EACH PIPE AND DUCT SYSTEM. STRUCTURAL ENGINEER OF RECORD SHALL VERIFY ADEQUACY OF SUPPORTING STRUCTURE TO SUPPORT LOADS OF ANCHORAGE AND BRACING SYSTEM BASED ON SHOP DRAWINGS. STRUCTURAL ENGINEER OF RECORD SHALL REVIEW SHOP DRAWINGS.
   C. SHOP DRAWINGS OF SEISMIC BRACING SHALL BE AVAILABLE TO THE INSPECTOR OF RECORD TO VERIFY THE INSTALLATION OF THE SEISMIC BRACING.
5. THE INSTALLATION SHALL BE SUBJECT TO THE APPROVAL OF THE STRUCTURAL ENGINEER AND VA ENGINEER.
6. WHERE BRACING AND ANCHORAGE DETAILS ARE NOT SHOWN ON THE DRAWINGS OR IN THE GUIDELINES, THE FIELD INSTALLATION SHALL BE SUBJECT TO THE APPROVAL OF VA ENGINEER, THE ARCHITECT, STRUCTURAL ENGINEER, AND MECHANICAL ENGINEER.
7. REFER TO STRUCTURAL DRAWINGS FOR CONCRETE ANCHOR TYPE AND INSTALLATION REQUIREMENTS.
8. PIPING, DUCTWORK AND CONDUIT CROSSING BUILDING SEISMIC SEPARATIONS SHALL BE PROVIDED WITH APPROVED FLEXIBLE CONNECTORS.

HVAC ABBREVIATIONS

ABBREV.	DESCRIPTION
A, AMPS	AMPERES
ABV	ABOVE
AD	ACCESS DOOR
AFF	ABOVE FINISHED FLOOR
AFG	ABOVE FINISHED GRADE
AHU	AIR HANDLING UNIT
AMB	AMBIENT
AP	ACCESS PANEL
ARCH	ARCHITECTURAL
AUTO	AUTOMATIC
BEL	BELOW
BFG	BELOW FINISHED GRADE
BHP	BRAKE HORSEPOWER
BTUH	BRITISH THERMAL UNITS PER HOUR
CAP	CAPACITY
CB	CIRCUIT BREAKER
CFM	CUBIC FEET PER MINUTE
CLG	CEILING
COMP	COMPRESSOR
COND	CONDITION
CONDR	CONDENSER
COP	COEFFICIENT OF PERFORMANCE
CU	CONDENSING UNIT
CV	CONSTANT VOLUME
dB	DECIBEL
DB	DRY BULB TEMPERATURE
DDC	DIRECT DIGITAL CONTROL
DEFL	DEFLECTION
DEMO	DEMOLITION
DL	DOOR LOUVER
DN	DOWN
DPSW	DIFFERENTIAL PRESSURE SWITCH
DS	DUCT SILENCER
DSW	DISCONNECT SWITCH
DWGS	DRAWINGS
EX, EXIST	EXISTING
EA	EACH
EER	ENERGY EFFICIENCY RATIO
EF	EXHAUST FAN
EFF	EFFICIENCY
ELECT	ELECTRICAL
ELEV	ELEVATION
ENCL	ENCLOSURE
ENT	ENTERING
ESP	EXTERNAL STATIC PRESSURE
EVAP	EVAPORATOR, EVAPORATIVE
°F	DEGREES FAHRENHEIT
FD	FLOOR DRAIN
FLA	FULL LOAD AMPS
FLEX	FLEXIBLE
FPI	FINS PER INCH
FPM	FEET PER MINUTE
FS	FLOOR SINK
FT	FOOT
FV	FACE VELOCITY
GAL	GALLON
GPM	GALLONS PER MINUTE
H	HEIGHT
HC	HEATING COIL
HP	HORSEPOWER
HR	HOUR
HTG	HEATING
HVAC	HEATING, VENTILATING AND AIR CONDITIONING
HZ	HERTZ
IN	INCH
KW	KILOWATT
L	LENGTH
LBS	POUNDS
LD	LINEAR DIFFUSER
LRA	LOCKED ROTOR AMPERES

ABBREV.	DESCRIPTION
LVG	LEAVING
MA	MIXED AIR
MAX	MAXIMUM
MBH	THOUSAND BRITISH THERMAL UNITS PER HOUR
MCA	MINIMUM CIRCUIT AMPACITY
MCC	MOTOR CONTROL CENTER
MFGR	MANUFACTURER
MIN	MINIMUM
MOCP	MAXIMUM OVERCURRENT PROTECTION
MPH	MILES PER HOUR
NC	NOISE CRITERIA
NEMA	NATIONAL ELECTRICAL MANUFACTURERS ASSOCIATION
NIC	NOT IN CONTRACT
OBD	OPPOSED BLADE DAMPER
OC	ON CENTER
OFCI	OWNER FURNISHED AND CONTRACTOR INSTALLED
OPNG	OPENING
OP, OPER	OPERATING
OV	OUTLET VELOCITY
PERF	PERFORATED
PD	PRESSURE DROP
PH	PHASE
PR, PRESS	PRESSURE
PSI	POUND PER SQUARE INCH
QTY	QUANTITY
REFR	REFRIGERANT
RH	RELATIVE HUMIDITY
RLA	RATED LOAD AMPERES
RPM	REVOLUTIONS PER MINUTE
SC	SENSIBLE CAPACITY
SD	SMOKE DETECTOR
SEER	SEASONAL ENERGY EFFICIENCY RATIO
SF, SQ FT	SQUARE FEET
SG	SUPPLY GRILLE
SHT	SHEET
SO	SCREENED OPENING
SP	STATIC PRESSURE
SPEC(S)	SPECIFICATIONS
SS	STAINLESS STEEL
ST	STEAM TRAP
SW	SWITCH
T	TANK
TA	TRANSFER AIR
TC	TOTAL CAPACITY
TDH	TOTAL DYNAMIC HEAD
TE	TOP ELEVATION
TEMP	TEMPERATURE
TSP	TOTAL STATIC PRESSURE
TYP	TYPICAL
UC	UNDER CUT
UG	UNDERGROUND
UL	UNDERWRITER'S LABORATORY
UON	UNLESS OTHERWISE NOTED
UTR	UP THRU ROOF
V	VOLTS
VAV	VARIABLE AIR VOLUME
VEL	VELOCITY
VFD	VARIABLE FREQUENCY DRIVE
VTR	VENT THRU ROOF
W	WIDTH
W/	WITH
WB	WET BULB TEMPERATURE
WG	WATER GAUGE
WMS	WIRE MESH SCREEN
W/O	WITHOUT
WP	WEATHER PROOF
WT	WEIGHT
WTR	WATER

HVAC NOTATION LEGEND

SYMBOL	ABBREV.	DESCRIPTION
Ⓣ	STAT	THERMOSTAT
Ⓣ	TS	IN-DUCT TEMPERATURE SENSOR
Ⓗ	HS	HUMIDITY SENSOR
Ⓗ	STAT	IN-DUCT HUMIDITY SENSOR
Ⓢ	SW	SWITCH
	POC	POINT OF CONNECTION
	POD	POINT OF DISCONNECT OR DEMOLITION
1		SHEET KEY NOTES DEMOLITION
1		SHEET KEY NOTES NEW WORK
ø	DIA	DIAMETER
3		DETAIL NUMBER
		DETAIL SYMBOL
M6.1		DRAWING NUMBER WHERE DETAIL IS SHOWN
AHU		MECHANICAL EQUIPMENT ABBREVIATION
		MECHANICAL EQUIPMENT SYMBOL
1		MECHANICAL EQUIPMENT NUMBER

HVAC WATERSIDE LEGEND

SYMBOL	ABBREV.	DESCRIPTION
HS	HS	HEATING HOT WATER SUPPLY PIPING
HR	HR	HEATING HOT WATER RETURN PIPING
CHS	CHS	CHILLED WATER SUPPLY PIPING
CHR	CHR	CHILLED WATER RETURN PIPING
CD	CD	CONDENSATE DRAIN PIPING
CDS	CDS	CONDENSER WATER SUPPLY PIPING
CDR	CDR	CONDENSER WATER RETURN PIPING
HPS	HPS	HIGH PRESSURE STEAM PIPING (ABOVE 80-PSIG)
HPR	HPR	HIGH PRESSURE CONDENSATE RETURN PIPING
MPS	MPS	MEDIUM PRESSURE STEAM PIPING (31 TO 80-PSIG)
MPR	MPR	MEDIUM PRESSURE CONDENSATE RETURN PIPING
LPS	LPS	LOW PRESSURE STEAM PIPING (0 TO 30-PSIG)
LPR	LPR	LOW PRESSURE CONDENSATE RETURN PIPING
PC	PC	PUMPED CONDENSATE PIPING
RL	RL	REFRIGERANT LIQUID PIPING
RS	RS	REFRIGERANT SUCTION PIPING

SYMBOL		DESCRIPTION
DOUBLE	SINGLE	
		PIPE ELBOW DOWN OR AWAY FROM VIEWER
		PIPE ELBOW UP OR TOWARD VIEWER
		CHECK VALVE
		BUTTERFLY VALVE
M / M SECTION PLAN		CONTROL VALVE
		FLEXIBLE PIPING CONNECTION
SECTION PLAN		STRAINER

SYMBOL	ABBREV.	DESCRIPTION
		ANCHOR
	AV	AUTOMATIC AIR VENT
		BALL VALVE
	CBV	CALIBRATED BALANCE VALVE
DPS		DIFFERENTIAL PRESSURE SENSOR
	EJ	EXPANSION JOINT
		FLANGE
FS	FS	FLOOR SINK (REFER TO PLUMBING DRAWINGS)
		FLOW IN DIRECTION OF ARROW
FMD		FLOW MEASURING DEVICE
FSW	FSW	FLOW SWITCH
		GATE VALVE
	MV	MANUAL AIR VENT
		PIPE SUPPORT
PT		PRESSURE AND TEMPERATURE TEST PORT
Ⓟ	PG	PRESSURE GAUGE
		PUMP
		CONCENTRIC REDUCER
		TEMPERATURE SENSOR IN PIPING
		THERMOMETER IN PIPING
		UNION
BT	BT	BUCKET TYPE STEAM TRAP
FT	F&T	FLOAT AND THERMOSTATIC STEAM TRAP
TD	TD	THERMODYNAMIC STEAM TRAP
6" CTR		PIPE SIZE AND DESCRIPTION
455 GPM		FLOW IN PIPING
95°F		FLUID TEMPERATURE

HVAC AIRSIDE LEGEND

SYMBOL	FLOW ARROW	ABBREV.	DESCRIPTION
		SA	SUPPLY AIR
		RA	RETURN AIR
	EXH	EXH	EXHAUST AIR
	OSA	OSA	OUTSIDE AIR
	REL	REL	RELIEF AIR

SYMBOL				ABBREV.	DESCRIPTION
DOUBLE		SINGLE			
RECT	RND	RECT	RND		
WxH	Dø	WxH	Dø		DUCTWORK (FIRST DIMENSION IN SIZE FACES THE VIEWER)
					DUCT RISE OR TURN TOWARD VIEWER
					DUCT DROP OR TURN AWAY FROM VIEWER

SYMBOL		ABBREV.	DESCRIPTION
DOUBLE	SINGLE		
		(E)	EXISTING DUCT, PIPE, OR EQUIPMENT
			EXISTING DUCT, PIPE, OR EQUIPMENT TO BE REMOVED
		(N)	NEW DUCT, PIPE, OR EQUIPMENT
WxH(L)	WxH(L)	(L)	LINED DUCT: L = 1-INCH, 2L = 2-INCH, 3L = 3-INCH, ETC.
			FLEXIBLE DUCT CONNECTION
			TRANSITION: RECTANGULAR TO RECTANGULAR OR ROUND TO ROUND
			TRANSITION: RECTANGULAR TO ROUND
R	R		RISE IN DIRECTION OF AIRFLOW
D	D		DROP IN DIRECTION OF AIRFLOW
			MITERED ELBOW WITH TURNING VANES
			SMOOTH RADIUS ELBOW
			BRANCH DUCT PRESSURE TAP OR WYE BRANCH CONNECTION
			ROUND BRANCH DUCT CONICAL TAP
			FLEXIBLE DUCT TO CEILING DIFFUSER
BDD	BDD	BDD	BACKDRAFT DAMPER
FSD	FSD	FSD	COMBINATION FIRE/SMOKE DAMPER
		VD	MANUAL VOLUME DAMPER
MD	MD	MD	MODULATING DAMPER
SD	SD	SD	DUCT MOUNTED SMOKE DETECTOR PROVIDED UNDER ELECTRICAL
		H	DUCT MOUNTED HUMIDIFIER DISTRIBUTION TUBE OR HEADER
500	500		SIDE WALL GRILLE OF 500 CFM (FLOW ARROW INDICATES TYPE)
			CAPPED DUCTWORK

SYMBOL	ABBREV.	DESCRIPTION
	ATU	AIR TERMINAL UNIT
	SCV	SUPPLY VENTURI AIR CONTROL VALVE WITH REHEAT COIL
	ECV	EXHAUST VENTURI AIR CONTROL VALVE
300 300 300 300 300	CD	CEILING DIFFUSER OF 300 CFM (SHADING INDICATES BLANK OFF FOR NO THOW IN THAT DIRECTION)
300	RG	RETURN GRILLE OF 300 CFM
300	EG	EXHAUST GRILLE OF 300 CFM
200		LINEAR AIR BAR FOR SUPPLY AIR AT 200 CFM
200		LINEAR AIR BAR FOR RETURN OR EXHAUST AT 200 CFM
		LINEAR AIR BAR BLANKED OFF
OSA		LOUVER (FLOW ARROW INDICATES TYPE)

CONSTRUCTION DOCUMENTS
FULLY SPRINKLERED

F9

No.	Description	Date
1	SCHEMATIC DESIGN (SD)	10/20/2015
2	DESIGN DEVELOPMENT (DD)	01/18/2016
3	CONSTRUCTION DOCUMENTS (CD)	03/30/2016

CONSULTANTS:

15371
dHA + CALPEC
150 S. ARROYO PARKWAY
SUITE NO. 100
PASADENA, CA. 91105
TEL: (626) 445-8580
FAX: (626) 445-8081

Seals and Signatures

REGISTERED PROFESSIONAL ENGINEER
KEVIN TROY GUST
EXP 12-31-16
NO. 31496
MECHANICAL
STATE OF CALIFORNIA

ARCHITECTS/ENGINEERS:

LEO A DALY
PLANNING ARCHITECTURE ENGINEERING INTERIORS
550 South Hope Street, 27th Floor
Los Angeles, California 90071, USA
213-629-0100 F213-629-0070
EST. 1915

Drawing Title: MECHANICAL LEGENDS AND NOTES

Approved: Project Director

Project Title: CONSTRUCT OPERATING ROOM #8

Location: 11201 BENTON STREET, LOMA LINDA, CA 92357

Date: 3/30/2016 | Checked: KG | Drawn: dHA+CALPEC

Project Number: 605-14-640

Building Number: 1

Drawing Number: MH001

Dwg. of

Office of Construction and Facilities Management

Department of Veterans Affairs

VA FORM 08-6231

CEILING DIFFUSER SCHEDULE, CD-1

SYMBOL	DESCRIPTION	NECK SIZE (1)	FACE DIMENSION (2)	CFM RANGE	MAX. TOTAL PRESSURE (IN. W.C.)	MAX. NC	MAX THROW @ 50 FPM (FT) 1-WAY	2-WAY	3-WAY	4-WAY
1-WAY THROW 2-WAY CORNER THROW 2-WAY OPPOSITE THROW 3-WAY THROW 4-WAY THROW	DIRECTIONAL AIR PATTERN PERFORATED FACE WITH MODULAR CORES	6"x6"	12"x12"	0–100	0.08	20	17	12	12	9
		8"x8"	16"x16"	101–200	0.08	20	22	15	15	11
		10"x10"	16"x16"	201–300	0.08	20	27	19	19	13
		12"x12"	24"x24"	301–400	0.07	20	32	22	22	16
		14"x14"	24"x24"	401–550	0.07	20	36	26	26	18
		16"x16"	24"x24"	551–700	0.06	20	41	29	29	21
		18"x18"	24"x24"	701–800	0.06	20	46	32	32	23

REMARKS

1. UNLESS OTHERWISE NOTED ON DRAWINGS.
2. FACE DIMENSION INDICATED IS FOR SURFACE MOUNT IN GYP. BOARD CEILING APPLICATIONS. PROVIDE 24"x24" PANEL FOR ALL NECK SIZES IN ACOUSTICAL LAY-IN T-BAR APPLICATIONS.
3. COORDINATE WITH ARCHITECTURAL DRAWINGS FOR CEILING GRID AND BORDER TYPE.
4. PROVIDE DUCT TO NECK TRANSITION AS REQUIRED.

CEILING RETURN AND EXHAUST GRILLE SCHEDULE, CG-1

SYMBOL	DESCRIPTION	NECK SIZE (1)	FACE DIMENSION (2)	CFM RANGE	MAX. TOTAL PRESSURE (IN. W.C.)	MAX. NC
RETURN EXHAUST	PERFORATED FACE GRILLE	6"x6"	12"x12"	0–100	0.09	15
		8"x8"	16"x16"	101–200	0.10	15
		10"x10"	16"x16"	201–300	0.10	15
		12"x12"	20"x20"	301–400	0.10	20
		14"x14"	20"x20"	401–500	0.10	20
		16"x16"	24"x24"	501–700	0.10	20
		18"x18"	24"x24"	701–800	0.10	20
		20"x20"	24"x24"	801–1030	0.10	20
		22"x22"	24"x24"	1031–1260	0.10	20

REMARKS

1. UNLESS OTHERWISE NOTED ON DRAWINGS.
2. FACE DIMENSION INDICATED IS FOR SURFACE MOUNT IN GYP. BOARD CEILING APPLICATIONS. PROVIDE 24"x24" PANEL FOR ALL NECK SIZES IN ACOUSTICAL LAY-IN T-BAR CEILING APPLICATIONS.
3. COORDINATE WITH ARCHITECTURAL DRAWINGS FOR CEILING AND BORDER TYPE.
4. GRILLE BACKPAN SHALL BE SAME FINISH AS GRILLE. ALL DAMPERS, EQUALIZING GRIDS, DUCT SURFACES, AND OTHER ACCESSORIES VISIBLE THROUGH GRILLE SHALL BE FLAT BLACK FINISH.

STEAM HUMIDIFIER SCHEDULE

SYMBOL	MANUFACTURER AND MODEL NUMBER	LOCATION AND DRAWING REFERENCE	SERVICE	AIRFLOW (CFM)	MOISTURE ADDED (LBS/HR)	MANIFOLD FACE WIDTH (IN)	FACE HEIGHT (IN)	STEAM TUBE QUANTITY	ABSORBTION DISTANCE (FT)	STEAM INLET PRESSURE (PSIG)	MAXIMUM PD (PSIG)	MAXIMUM HEAT GAIN (°F)	OPERATING WEIGHT (LB)	REMARKS
H 1	DRISTEEM ULTRA-SORB XV	INTERSTITIAL MH102A	CV-3	3930	75	30	18	2	1	10	–	0.1	150	STEAM TRAP, SEISMIC CERTIFICATION, SOLENOID VALVE, ELECTRIC MODULATING CONTROL, INSULATED HEADERS

AIR TERMINAL UNIT SCHEDULE

SYMBOL	MANUFACTURER MAKE	MODEL	INLET SIZE	AIRFLOW (CFM) COOLING	HEATING	MINIMUM	NC AT MAX P.D. DISCH	RAD	REHEAT COIL CAPACITY (MBH)	AIR TEMP ENT (°F)	LVG (°F)	HS ENT (°F)	NO. OF ROWS	GPM	HS & HR SIZE (IN.)	CONTROL VALVE	OPER. WEIGHT (LBS.)	REMARKS
CV- 1	TITUS	DESV	10"	935	935	290	<20	<20	22.63	55	77	200	1	2.00	0.75	2-WAY	50	
CV- 2	TITUS	DESV	10"	730	730	290	<20	<20	16.06	55	75	200	1	1.50	0.75	3-WAY	50	
CV- 3	TITUS	DESV	24"x16"	3930	3930	1400	<20	<20	77.81	55	73	200	1	5.50	0.75	2-WAY	125	

NOTE 1. PROVIDE 120V-1 PH POWER TO AIR TERMINAL UNITS. CONTROL CONTRACTOR SHALL PROVIDE 120V TO 24V TRANSFORMER FOR AIR TERMINAL UNITS.
2. ALL AIR TERMINAL UNITS SHALL BE PRESSURE INDEPENDENT.

AHU-1 AIR BALANCE TABLE

Room Information: Room Number	Room Name	CMC Table 4-A Designation	Area (sq ft)	Ceiling Height (ft)	Volume (cu ft)	Proposed Design: Supply Air (cfm)	Outdoor Air (cfm)	Return Air (cfm)	Exhaust Air (cfm)	Transfer Air [SA-(RA+EXH)] (cfm)	Air Change Per Hour: Outdoor Air	Total Air	Air Balance	OSHPD Requirement Air Change Per Hour: Outdoor Air	Total Air	Air Balance
3F-25	VESTIBULE	Patient area corridor	68	9	612	120	37	0	0	120	3.7	11.8	NR	2	4	NR
3F-27	VESTIBULE	Patient area corridor	96	9	864	120	37	0	0	120	2.6	8.3	NR	2	4	NR
3F-28	MALE STAFF LOCKERS	Toilet room	296	9	2664	380	119	0	450	-70	2.7	10.1	N	0	10	N
3F-28A	MALE STAFF TOILETS/SHOWERS	Toilet room	196	9	1764	250	78	0	300	-50	2.7	10.2	N	0	10	N
3F-26	FEMALE STAFF LOCKERS	Toilet room	308	9	2772	400	125	0	470	-70	2.7	10.2	N	0	10	N
3F-26A	FEMALE STAFF TOILETS/SHOWERS	Toilet room	217	9	1953	280	87	0	330	-50	2.7	10.1	N	0	10	N
3F-02	ANESTHESIA WORKSTATIONS	Anesthesia storage	285	9	2565	380	119	0	380	0	2.8	8.9	NR	0	8	NR
3F-01	ANESTHESIA CHIEF OFFICE	Adminstrative	107	9	963	130	41	130	0	0	2.5	8.1	NR	2	4	NR
3F-02A	MEDICATION ROOM	Pharmacy/medicine room	119	9	1071	150	47	120	0	30	2.6	8.4	P	2	4	P
3F-04	ANESTHIESIA WORKSTATIONS/ MNGR. OFFICE	Adminstrative	146	9	1314	190	59	190	0	0	2.7	8.7	NR	2	4	NR
3F-22	MNGR.OFFICE	Adminstrative	118	9	1062	140	44	140	0	0	2.5	7.9	NR	2	4	NR
3F-03	STAFF LOUNGE/BREAKROOM	Adminstrative	387	9	3483	730	228	0	730	0	3.9	12.6	NR	2	4	NR
3F-11	ROBOTIC STORAGE	Operating room, cardiac cath lab and cystoscopy	216	9	1944	650	203	550	0	100	6.3	20.1	P	5	20	P
3F-11	ROBOTIC OR	Operating room, cardiac cath lab and cystoscopy	710	9	6390	3280	1025	2790	0	490	9.6	30.8	P	5	20	P

CONSTRUCTION DOCUMENTS
FULLY SPRINKLERED

F9

No.	Description	Date
1	SCHEMATIC DESIGN (SD)	10/20/2015
2	DESIGN DEVELOPMENT (DD)	01/18/2016
3	CONSTRUCTION DOCUMENTS (CD)	03/30/2016

CONSULTANTS:

15371 dHA + CALPEC
150 S. ARROYO PARKWAY
SUITE NO. 100
PASADENA, CA. 91105
TEL: (626) 445-8580
FAX: (626) 445-8081

Seals and Signatures

REGISTERED PROFESSIONAL ENGINEER
KEVIN TROY GUO
NO. 31496
MECHANICAL
STATE OF CALIFORNIA
Exp 12-31-16

ARCHITECTS/ENGINEERS:

LEO A DALY
PLANNING ARCHITECTURE ENGINEERING INTERIORS
550 South Hope Street, 27th Floor
Los Angeles, California 90071, USA
213-629-0100 F213-629-0070
EST. 1915

Drawing Title: MECHANICAL SCHEDULES

Approved: Project Director

Project Title: CONSTRUCT OPERATING ROOM #8

Location: 11201 BENTON STREET, LOMA LINDA, CA 92357

Date: 3/30/2016 | Checked: KG | Drawn: dHA+CALPEC

Project Number: 605-14-640

Building Number: 1

Drawing Number: MH002

Dwg. of

Office of Construction and Facilities Management

Department of Veterans Affairs

VA FORM 08-6231

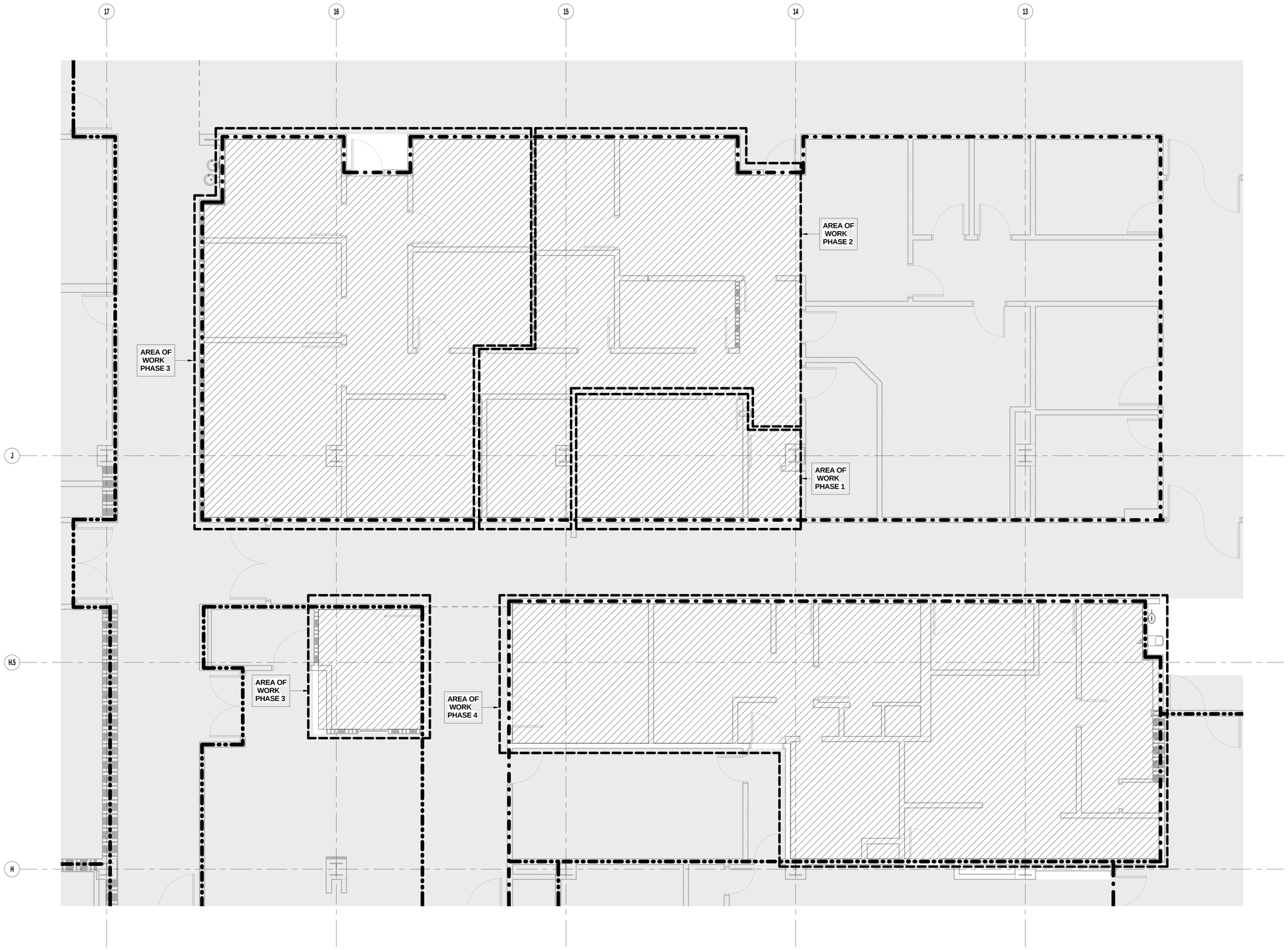

F1 MECHANICAL DEMOLITION PLAN - LEVEL 3 - AREA D
SCALE: 1/4" = 1'-0"

GENERAL DEMOLITION NOTES

1. REMOVE EXISTING DUCTWORK AND ALL ASSOCIATED GRILLES, REGISTERS AND DIFFUSERS BACK TO THE AIR TERMINAL UNIT.

EXACT SIZE, ELEVATION, & LOCATION OF EXISTING SHALL BE FIELD VERIFIED.

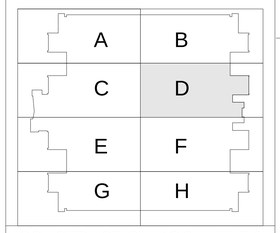

CONSTRUCTION DOCUMENTS
FULLY SPRINKLERED

N

0 2' 4' 8'
SCALE : 1/4" = 1'-0"

No.	Description	Date
1	SCHEMATIC DESIGN (SD)	09/18/2015
2	DESIGN DEVELOPMENT (DD)	01/18/2016
3	CONSTRUCTION DOCUMENTS(CD)	03/30/2016

CONSULTANTS:

15371
dHA + CALPEC
150 S. ARROYO PARKWAY
SUITE NO. 100
PASADENA, CA. 91105
TEL: (626) 445-8580
FAX: (626) 445-8081

Seals and Signatures

REGISTERED PROFESSIONAL ENGINEER
KEVIN S. CHEN
M-31154
Exp. 12/31/17
MECHANICAL
STATE OF CALIFORNIA

ARCHITECTS/ENGINEERS:

LEO A DALY
PLANNING
ARCHITECTURE
ENGINEERING
INTERIORS
550 South Hope Street, 27th Floor
Los Angeles, California 90071, USA
213-629-0100 F213-629-0070
EST. 1915

Drawing Title
MECHANICAL DEMOLITION PLAN - LEVEL 3 - AREA D

Approved: Project Director

Project Title
CONSTRUCT OPERATING ROOM #8

Location
11201 BENTON STREET, LOMA LINDA, CA 92357

Date	Checked	Drawn
3/30/2016	KG	dHA+CALPEC

Project Number
605- 14-640

Building Number

Drawing Number
MD101

Office of Construction and Facilities Management

Department of Veterans Affairs

3/24/2016 4:33:28 PM C:\Users\MikeS\Documents\X-MECH VA LL OR RELOCATION_MikeS.rvt

VA FORM 08-6231

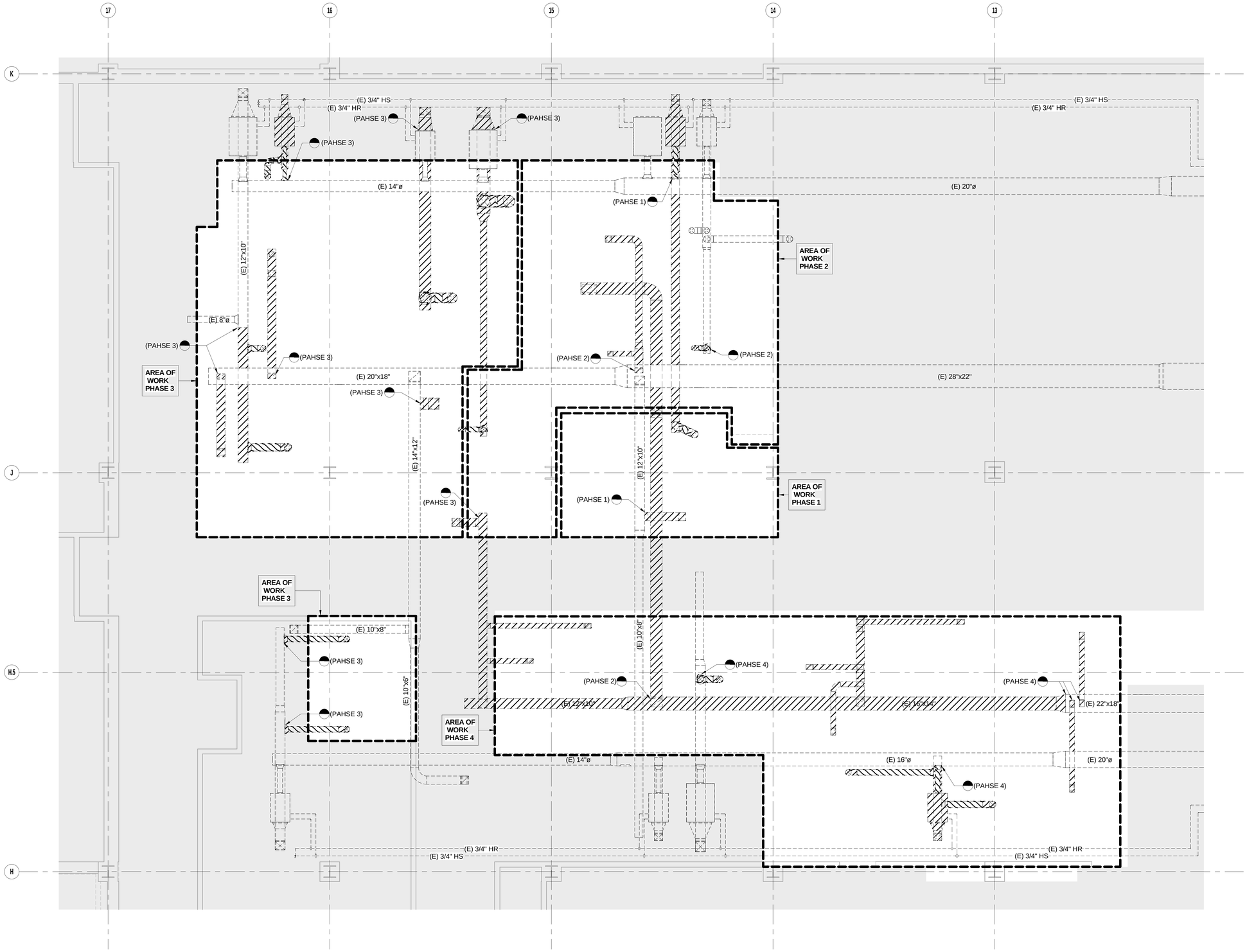

GENERAL DEMOLITION NOTES

1. REMOVE EXISTING DUCTWORK AND ALL ASSOCIATED GRILLES, REGISTERS AND DIFFUSERS BACK TO THE AIR TERMINAL UNIT.

EXACT SIZE, ELEVATION, & LOCATION OF EXISTING SHALL BE FIELD VERIFIED.

F1 MECHANICAL INTERSTITIAL DEMOLITION PLAN - LEVEL 3 - AREA D
SCALE: 1/4" = 1'-0"

N

0 2' 4' 8'
SCALE : 1/4" = 1'-0"

A	B
C	D
E	F
G	H

CONSTRUCTION DOCUMENTS
FULLY SPRINKLERED

No.	Description	Date
1	SCHEMATIC DESIGN (SD)	09/18/2015
2	DESIGN DEVELOPMENT (DD)	01/18/2016
3	CONSTRUCTION DOCUMENTS(CD)	03/30/2016

CONSULTANTS:

15371 dHA + CALPEC
150 S. ARROYO PARKWAY
SUITE NO. 100
PASADENA, CA. 91105
TEL: (626) 445-8580
FAX: (626) 445-8081

Seals and Signatures

REGISTERED PROFESSIONAL ENGINEER KEVIN S. CHEN M-31154 Exp. 12/31/17 MECHANICAL STATE OF CALIFORNIA

ARCHITECTS/ENGINEERS:

LEO A DALY
550 South Hope Street, 27th Floor
Los Angeles, California 90071, USA
213-629-0100 F213-629-0070

PLANNING
ARCHITECTURE
ENGINEERING
INTERIORS

EST. 1915

Drawing Title: MECHANICAL INTERSTITIAL DEMOLITION PLAN - LEVEL 3 - AREA D

Approved: Project Director

Project Title: CONSTRUCT OPERATING ROOM #8

Location: 11201 BENTON STREET, LOMA LINDA, CA 92357

Date: 3/30/2016 | Checked: KG | Drawn: dHA+CALPEC

Project Number: 605- 14-640

Building Number

Drawing Number: MD102

Office of Construction and Facilities Management

Department of Veterans Affairs

VA FORM 08-6231

3/24/2016 4:33:31 PM C:\Users\MMack\Documents\X-MECH VALLE OR RELOCATION_MMack.rvt

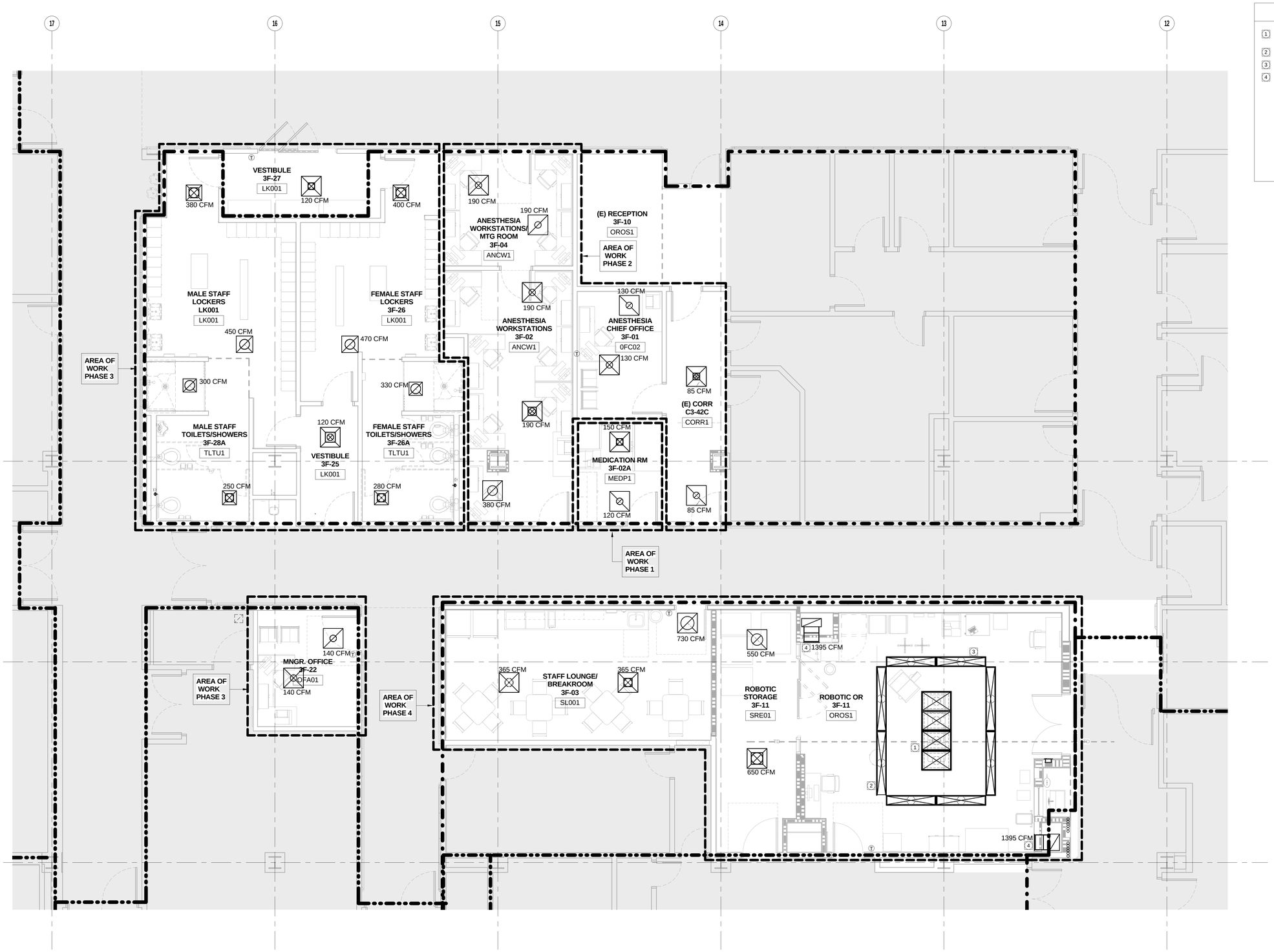

F1 MECHANICAL FLOOR PLAN - LEVEL 3 - AREA D
SCALE: 1/4" = 1'-0"

REFERENCE NOTES

1. (4)24x36 LAMINAR FLOW DIFFUSER WITH HEPA FILTER. PRICE MODEL LFDC, 245 CFM EACH.
2. (4)6'-6" AIR CURTAIN . PRICE MODEL HORD, 330 CFM EACH.
3. (4)5'-0" AIR CURTAIN . PRICE MODEL HORD, 245 CFM EACH.
4. 30x18 RETURN AIR GRILLE 6" ABOVE FINISHED FLOOR.

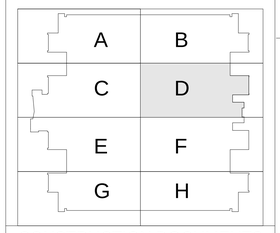

CONSTRUCTION DOCUMENTS
FULLY SPRINKLERED

SCALE : 1/4" = 1'-0"

No.	Description	Date
1	SCHEMATIC DESIGN (SD)	09/18/2015
2	DESIGN DEVELOPMENT (DD)	01/18/2016
3	CONSTRUCTION DOCUMENTS(CD)	03/30/2016

CONSULTANTS:

15371 dHA + CALPEC
150 S. ARROYO PARKWAY
SUITE NO. 100
PASADENA, CA. 91105
TEL: (626) 445-8580
FAX: (626) 445-8081

Seals and Signatures

REGISTERED PROFESSIONAL ENGINEER KEVIN S. CHEN M-31154 Exp. 12/31/17 MECHANICAL STATE OF CALIFORNIA

ARCHITECTS/ENGINEERS:

LEO A DALY
PLANNING ARCHITECTURE ENGINEERING INTERIORS
550 South Hope Street, 27th Floor
Los Angeles, California 90071, USA
213-629-0100 F213-629-0070
EST. 1915

Drawing Title: MECHANICAL FLOOR PLAN - LEVEL 3 - AREA D

Approved: Project Director

Project Title: CONSTRUCT OPERATING ROOM #8

Location: 11201 BENTON STREET, LOMA LINDA, CA 92357

Date: 3/30/2016 | Checked: KG | Drawn: dHA+CALPEC

Project Number: 605- 14-640

Building Number:

Drawing Number: MH101

Office of Construction and Facilities Management

Department of Veterans Affairs

VA FORM 08-6231

3/24/2016 4:33:35 PM C:\Users\MikeS\Documents\X-MECH VA LL OR RELOCATION_MikeS.rvt

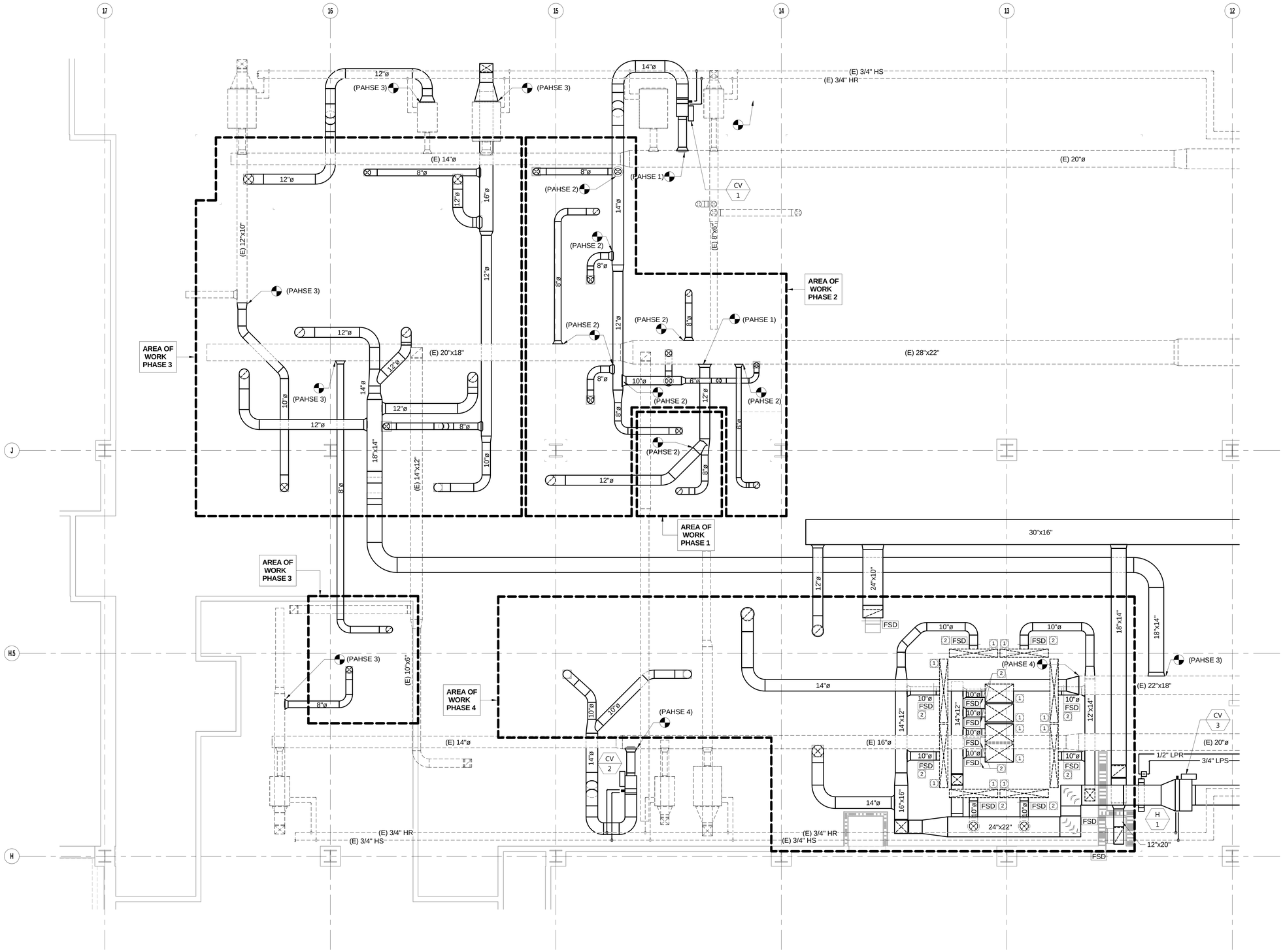

REFERENCE NOTES

1. 3M FIRE WRAP AROUND DIFFUSER PLENUM
2. FSD @ DUCT PENETRATION OF FIRE WRAP. CONNECT FSD TO AREA SMOKE DETECTOR SYSTEM. SEE FIRE ALARM DWG'S.

EXACT SIZE, ELEVATION, & LOCATION OF EXISTING SHALL BE FIELD VERIFIED.

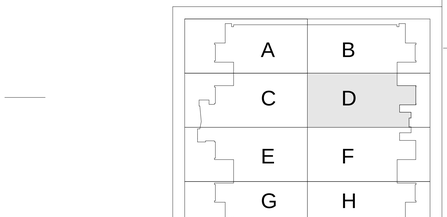

CONSTRUCTION DOCUMENTS
FULLY SPRINKLERED

SCALE : 1/4" = 1'-0"

No.	Description	Date
1	SCHEMATIC DESIGN (SD)	09/18/2015
2	DESIGN DEVELOPMENT (DD)	01/18/2016
3	CONSTRUCTION DOCUMENTS(CD)	03/30/2016

CONSULTANTS:

15371 dHA + CALPEC
150 S. ARROYO PARKWAY
SUITE NO. 100
PASADENA, CA. 91105
TEL: (626) 445-8580
FAX: (626) 445-8081

Seals and Signatures

REGISTERED PROFESSIONAL ENGINEER KEVIN S. CHEN M-31154 Exp. 12/31/17 MECHANICAL STATE OF CALIFORNIA

ARCHITECTS/ENGINEERS:

LEO A DALY
550 South Hope Street, 27th Floor
Los Angeles, California 90071, USA
213-629-0100 F213-629-0070

PLANNING ARCHITECTURE ENGINEERING INTERIORS

EST. 1915

Drawing Title: MECHANICAL INTERSTITIAL PLAN - LEVEL 3 - AREA D

Approved: Project Director

Project Title: CONSTRUCT OPERATING ROOM #8

Location: 11201 BENTON STREET, LOMA LINDA, CA 92357

Date: 3/30/2016 | Checked: KG | Drawn: dHA+CALPEC

Project Number: 605- 14-640

Building Number:

Drawing Number: MH102A

Office of Construction and Facilities Management

Department of Veterans Affairs

VA FORM 08-6231

3/24/2016 4:33:37 PM C:\Users\Mikes\Documents\X-MECH VA LL OR RELOCATION_MikeS.rvt

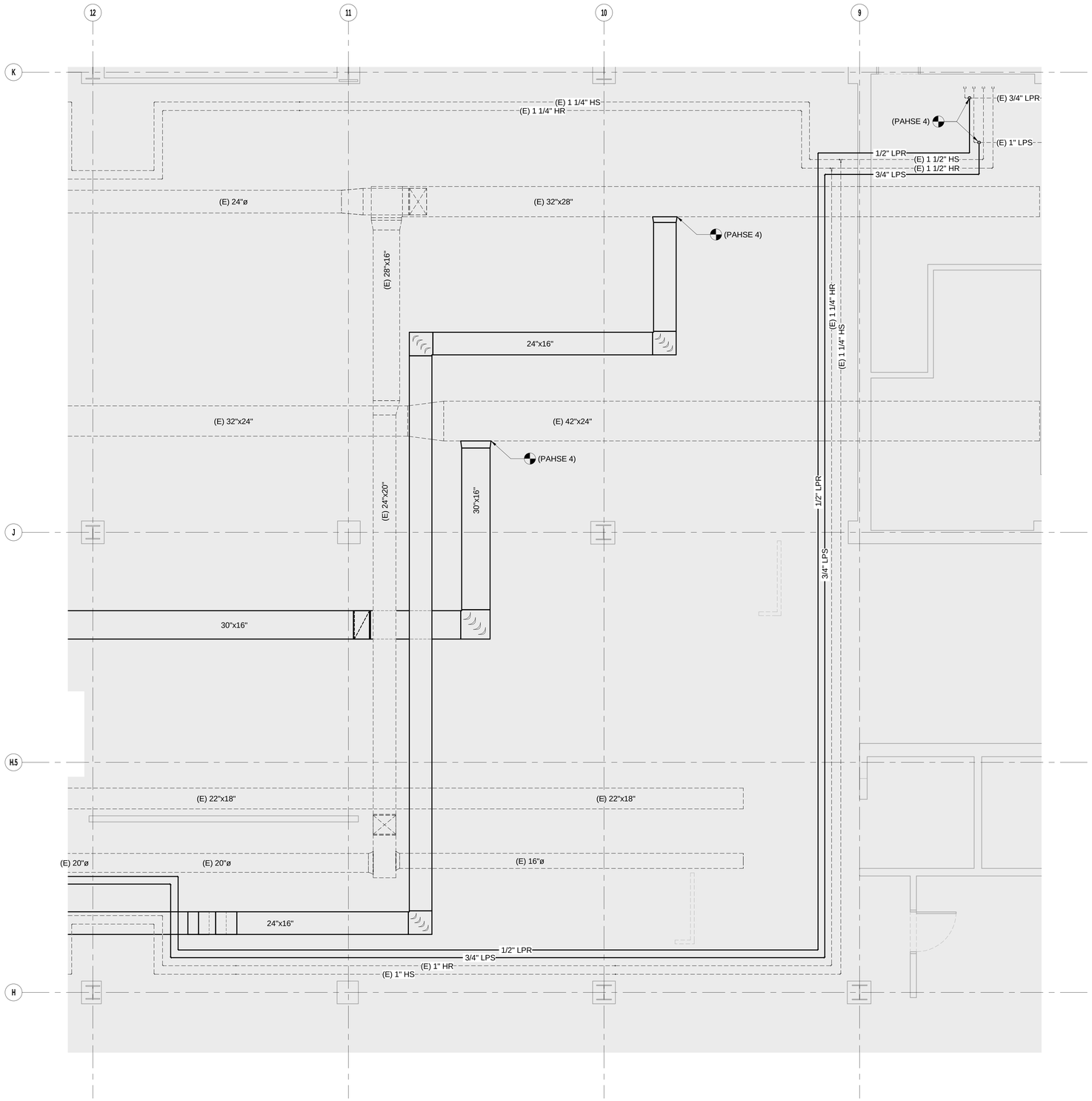

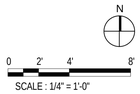

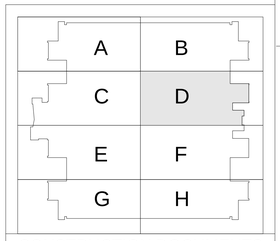

CONSTRUCTION DOCUMENTS
FULLY SPRINKLERED

No.	Description	Date
1	SCHEMATIC DESIGN (SD)	09/18/2015
2	DESIGN DEVELOPMENT (DD)	01/18/2016
3	CONSTRUCTION DOCUMENTS(CD)	03/30/2016

CONSULTANTS:

15371

dHA + CALPEC
150 S. ARROYO PARKWAY
SUITE NO. 100
PASADENA, CA. 91105
TEL: (626) 445-8580
FAX: (626) 445-8081

Seals and Signatures

REGISTERED PROFESSIONAL ENGINEER
KEVIN S. CHEN
M-31154
Exp. 12/31/17
MECHANICAL
STATE OF CALIFORNIA

ARCHITECTS/ENGINEERS:

LEO A DALY
PLANNING
ARCHITECTURE
ENGINEERING
INTERIORS
550 South Hope Street, 27th Floor
Los Angeles, California 90071, USA
213-629-0100 F213-629-0070
EST. 1915

Drawing Title
MECHANICAL INTERSTITIAL PLAN - LEVEL 3 - AREA D

Approved: Project Director

Project Title
CONSTRUCT OPERATING ROOM #8

Location
11201 BENTON STREET, LOMA LINDA, CA 92357

Date 3/30/2016
Checked KG
Drawn dHA+CALPEC

Project Number
605- 14-640

Building Number

Drawing Number
MH102B

Office of Construction and Facilities Management

Department of Veterans Affairs

VA FORM 08-6231

3/24/2016 4:33:38 PM C:\Users\Mikes\Documents\X-MECH VA LL OR RELOCATION_Mike5.rvt

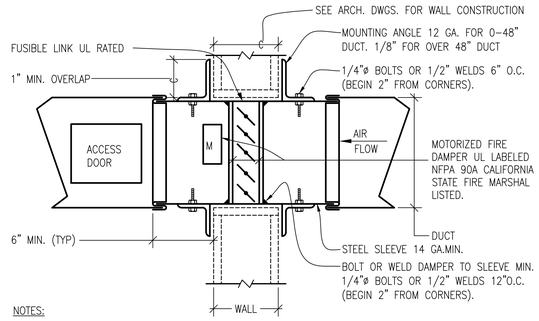

NOTES:

1. COMBINATION FIRE/SMOKE DAMPER "POTTORFF" MODEL FSD–142 WITH ROUND DUCT ADAPTER FOR ROUND DUCTS.
2. FIRE/SMOKE DAMPER TO BE ACTIVATED BY AREA SMOKE DETECTOR.
3. PROVIDE "POTTORFF" MODEL PI DUAL POSITION INDICATOR SWITCH. NO FIRESTAT SHALL BE PERMITTED.
4. DAMPER SHALL BE INSTALLED IN ACCORDANCE WITH THE MANUFACTURERS INSTALLATION INSTRUCTIONS.
5. COMBINATION FIRE/SMOKE DAMPERS SHALL BE "NORMALLY CLOSED" SO THEY WILL CLOSE UPON LOSS OF POWER.

COMBINATION FIRE/SMOKE DAMPER — B3

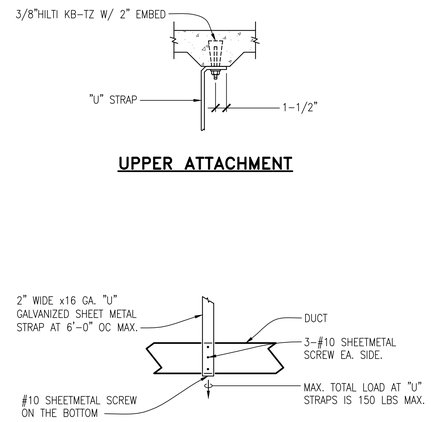

UPPER ATTACHMENT

SIDE ELEVATION

STRAP HANGER — B5

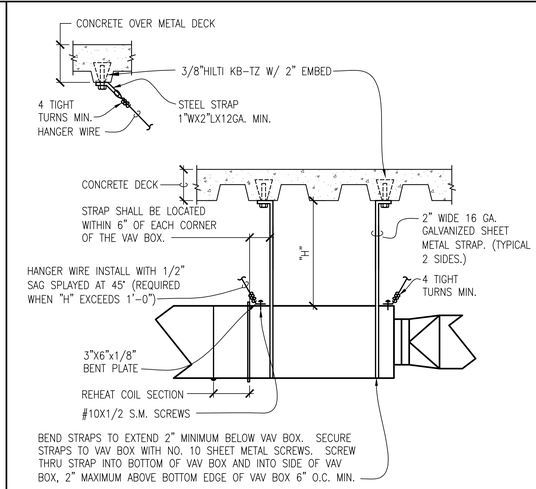

AIR TERMINAL UNIT MOUNTING — B7

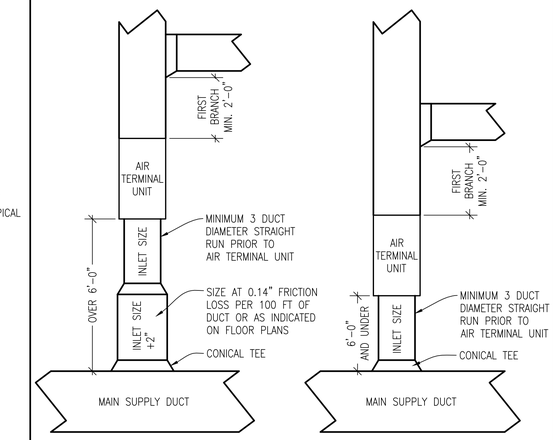

AIR TERMINAL UNIT BRANCH DUCT INSTALLATION — B9

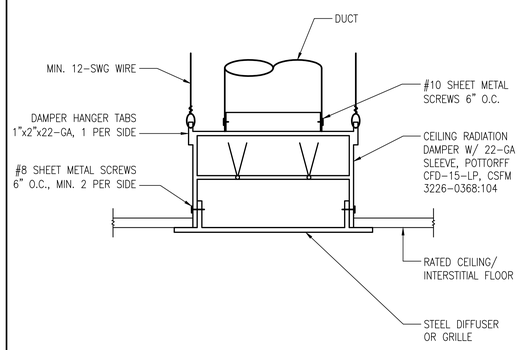

DIFFUSER/GRILLE WITH CEILING RADIATION DAMPER — D5

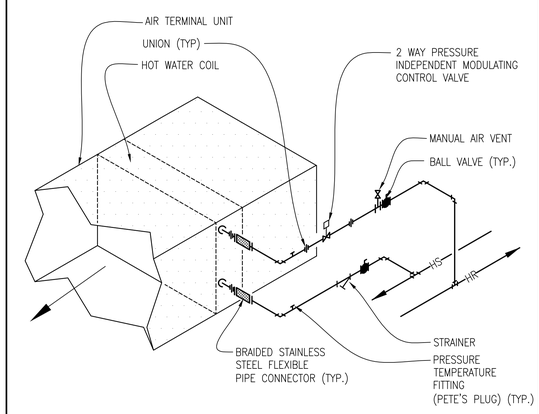

HOT WATER COIL PIPING CONNECTION — D7

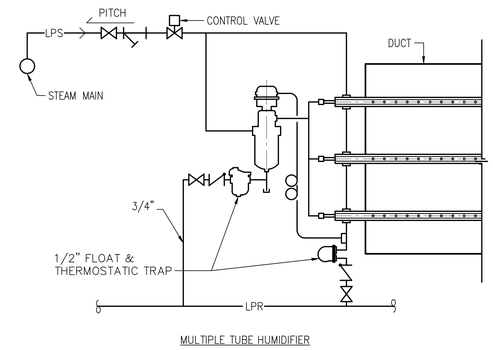

MULTIPLE TUBE HUMIDIFIER

HUMIDIFIER PIPING CONNECTION — D9

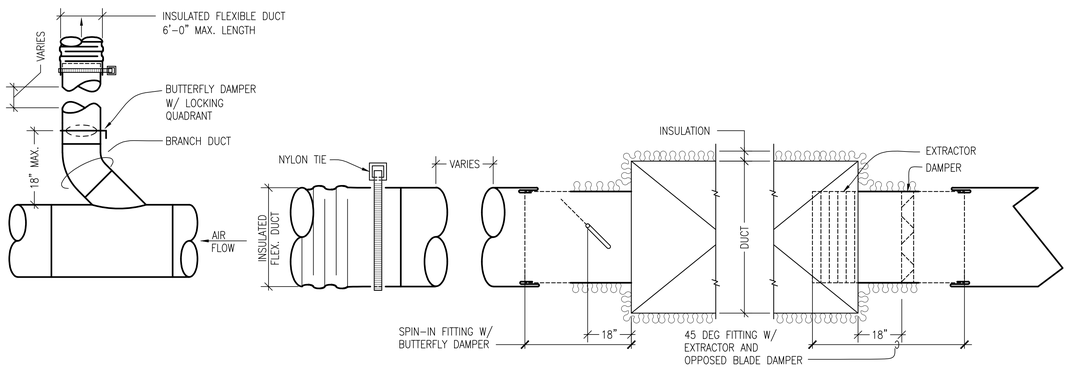

ROUND DUCT

RECTANGULAR DUCT

RECTANGULAR DUCT

ROUND AND RECTANGULAR DUCT TAKE–OFF — F5

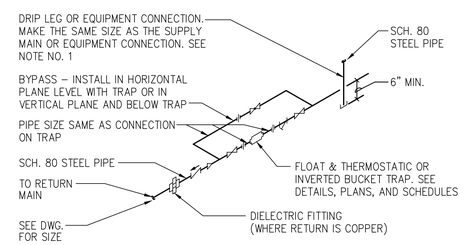

NOTES:

1. ALL DRIP POINTS ON STEAM MAINS SHALL BE PROVIDED WITH A 12" MINIMUM HIGH DRIP LEG FROM BOTTOM OF STEAM MAIN TO TRAP INLET. DRIP LEG SHALL HAVE 6" SCALE POCKET BELOW TRAP INLET.
2. NO BYPASS IS REQUIRED ON THE TRAP SET PROVIDED FOR THE DRIPPING OF LOW PRESSURE SUPPLY MAINS (15 PSIG OF LESS).
3. NO CHECK VALVE IS REQUIRED FOR LOW PRESSURE STEAM SYSTEM WITH GRAVITY RETURN.
4. NO BYPASS OR STRAINER IS REQUIRED ON TRAP SETS IN PARALLEL FOR PREHEAT COILS. ONLY ONE CHECK VALVE & ONE DIELECTRIC FITTING IS REQUIRED.

STEAM TRAP SET CONNECTIONS — F7

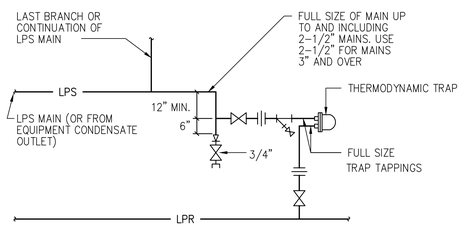

NOTES:

1. DRIP TRAP ASSEMBLY SHOWN. TRAP ASSEMBLY FOR EQUIPMENT CONDENSATE SHALL BE SIMILAR.

LOW PRESSURE STEAM TRAP ASSEMBLY — F9

CONSTRUCTION DOCUMENTS
FULLY SPRINKLERED
F9

No.	Description	Date
1	SCHEMATIC DESIGN (SD)	10/20/2015
2	DESIGN DEVELOPMENT (DD)	01/18/2016
3	CONSTRUCTION DOCUMENTS (CD)	03/30/2016

CONSULTANTS:

15371
dHA + CALPEC
150 S. ARROYO PARKWAY
SUITE NO. 100
PASADENA, CA. 91105
TEL: (626) 445-8580
FAX: (626) 445-8081

Seals and Signatures

REGISTERED PROFESSIONAL ENGINEER KEVIN TROY GUSTAFSON EXP 12-31-16 NO. 31498 MECHANICAL STATE OF CALIFORNIA

ARCHITECTS/ENGINEERS:

LEO A DALY
550 South Hope Street, 27th Floor
Los Angeles, California 90071, USA
213-629-0100 F213-629-0070
PLANNING ARCHITECTURE ENGINEERING INTERIORS
EST. 1915

Drawing Title: MECHANICAL DETAILS

Approved: Project Director

Project Title: CONSTRUCT OPERATING ROOM #8

Location: 11201 BENTON STREET, LOMA LINDA, CA 92357

Date: 3/30/2016 | Checked: KG | Drawn: dHA+CALPEC

Project Number: 605-14-640

Building Number: 1

Drawing Number: MH401

Dwg. of

Office of Construction and Facilities Management

Department of Veterans Affairs

VA FORM 08-6231

SEQUENCE OF OPERATION

1. GENERAL

   A. HVAC SYSTEMS SHALL BE CONTROLLED WITH A DIRECT DIGITAL CONTROL (DDC) ACCORDING TO THE POINTS INDICATED ON THE CONTROL DIAGRAMS, AND SHALL BE STAND-ALONE. ADDITIONAL POINTS (WHETHER HARDWARE OR SOFTWARE POINTS) NOT INDICATED ON THE CONTROL DIAGRAMS BUT ARE REQUIRED TO MEET THE FOLLOWING SEQUENCES OF OPERATION SHALL BE PROVIDED. POINTS INDICATED ON CONTROL DIAGRAMS SHALL BE AVAILABLE FOR PROGRAMMING, TRENDING, AND REPORTING ON THE DDC SYSTEM AND ITS PC WORKSTATION.

   B. SOFTWARE PROGRAMMING, TRENDING, REPORTS AND ALARMS SHALL BE PROVIDED TO MEET THE FOLLOWING SEQUENCES OF OPERATION.

   C. CONTROL SETPOINTS, SCHEDULES AND LIMITS SHALL BE ADJUSTABLE.

   D. ACTUATORS FOR VALVES, DAMPERS AND TERMINAL CONTROLLERS SHALL BE ELECTRIC/ELECTRONIC CONTROL.

   E. PUMP AND FAN OPERATION (STATUS) SHALL BE MONITORED BY THE CORRESPONDING CURRENT SENSORS.

   F. CONTROLLERS, RELAYS, TRANSDUCERS, ETC., REQUIRED FOR STAND-ALONE CONTROL SHALL BE HOUSED IN A NEMA 1 ENCLOSURE WITH A SCREW DRIVER LATCH ON DOOR BY CONTROL CONTRACTOR.

   G. FOR EACH CATEGORY OF ALARM LISTED IN THE SEQUENCE OF OPERATION THE ALARM SHALL ACTIVATE AS FOLLOWS (UNLESS OTHERWISE NOTED):
      1) FOR EACH "FAULT", "FAILURE", "IN HAND", "RUNTIME", AND "FILTER CHANGE OUT" THE ALARM SHALL ACTIVATE AS SOON AS THE INDICATED CONDITION OCCURS
      2) FOR EACH "AIRFLOW", "STATIC PRESSURE", "DIFFERENTIAL PRESSURE", "TEMPERATURE", "CO2 CONCENTRATION", AND "HUMIDITY" THE ALARM SHALL ACTIVATE WHEN THE INDICATED CONDITION OCCURS FOR 5-MINUTES (ADJ.)

   H. FOR EACH CATEGORY OF ALARM LISTED IN THE SEQUENCE OF OPERATION THE ALARM SHALL RETURN TO NORMAL AS FOLLOWS (UNLESS OTHERWISE NOTED):
      1) FOR EACH "FAULT", "FAILURE", "IN HAND", "TEMPERATURE", "CO2 CONCENTRATION", AND "HUMIDITY" THE ALARM SHALL RETURN TO NORMAL WHEN THE INDICATED CONDITION NO LONGER OCCURS.
      2) FOR EACH "AIRFLOW", "STATIC PRESSURE", AND "DIFFERENTIAL PRESSURE" THE ALARM SHALL RETURN TO NORMAL WHEN THE INDICATED CONDITION DOES NOT OCCUR FOR A 5-MINUTE DURATION.
      3) FOR EACH "RUNTIME" AND "FILTER CHANGE OUT" THE ALARM SHALL BE RESET TO ZERO (0) MANUALLY.

2. STEAM HUMIDIFIER

   A. THE HUMIDIFIER SHALL RUN WHENEVER AIRFLOW IS PROVEN USING DUCT MOUNTED AIRFLOW SWITCH. THE CONTROLLER SHALL CLOSE THE STEAM VALVE UPON LOSS OF AIRFLOW.

   B. THE CONTROLLER SHALL MODULATE THE STEAM VALVE TO MAINTAIN A SPACE HUMIDITY OF 50% RH (ADJ.)

   C. THE CONTROLLER SHALL CLOSE THE STEAM VALVE WHEN DUCT HUMIDITY REACHES A HIGH LIMIT SETPOINT OF 85% (ADJ.)

   D. ALARMS SHALL BE PROVIDED AS FOLLOWS:

      1) HIGH SUPPLY AIR HUMIDITY: IF THE SUPPLY AIR HUMIDITY IS GREATER THAN 90% RH (ADJ.)
      2) LOW SUPPLY AIR HUMIDITY: IF THE SUPPLY AIR HUMIDITY IS LESS THAN 30% RH (ADJ.)
      3) HIGH ROOM HUMIDITY: IF THE ROOM HUMIDITY IS GIREATER THAN 65% RH (ADJ.)
      4) LOW ROOM HUMIDITY: IF THE ROOM HUMIDITY IS LESS THAN 35% RH (ADJ.)

3. AIR TERMINAL UNIT WITH REHEAT COIL (CV)

   A. RUN CONDITIONS – SCHEDULED: THE UNIT SHALL RUN ACCORDING TO A USER DEFINABLE TIME SCHEDULE IN THE FOLLOWING MODES:

      1) OCCUPIED MODE: THE UNIT SHALL MAINTAIN
         a) A 70°F (ADJ.) COOLING SETPOINT
         b) A 70°F (ADJ.) HEATING SETPOINT.

      2) UNOCCUPIED MODE (NIGHT SETBACK): THE UNIT SHALL MAINTAIN
         a) A 75°F (ADJ.) COOLING SETPOINT.
         b) A 55°F (ADJ.) HEATING SETPOINT.

   B. ZONE SETPOINT ADJUST: THE OCCUPANT SHALL BE ABLE TO ADJUST THE ZONE TEMPERATURE HEATING AND COOLING SETPOINTS AT THE ZONE SENSOR.

   C. ZONE OPTIMAL START: THE UNIT SHALL USE AN OPTIMAL START ALGORITHM FOR MORNING START-UP. THIS ALGORITHM SHALL MINIMIZE THE UNOCCUPIED WARM-UP OR COOL-DOWN PERIOD WHILE STILL ACHIEVING COMFORT CONDITIONS BY THE START OF SCHEDULED OCCUPIED PERIOD.

   D. ZONE UNOCCUPIED OVERRIDE: A TIMED LOCAL OVERRIDE CONTROL SHALL ALLOW AN OCCUPANT TO OVERRIDE THE SCHEDULE AND PLACE THE UNIT INTO AN OCCUPIED MODE FOR AN ADJUSTABLE PERIOD OF TIME. AT THE EXPIRATION OF THIS TIME, CONTROL OF THE UNIT SHALL AUTOMATICALLY RETURN TO THE SCHEDULE.

   E. CONSTANT VOLUME TERMINAL UNIT – FLOW CONTROL:

      1) THE UNIT SHALL MAINTAIN ZONE SETPOINTS BY CONTROLLING THE AIRFLOW THROUGH ONE OF THE FOLLOWING:

      2) OCCUPIED:
         a) THE DAMPER SHALL MODULATE TO MAINTAIN AIRFLOW INDEPENDENT OF PRESSURE FLUCTUATIONS OF THE AIR HANDLING UNIT.
         b) WHEN ZONE TEMPERATURE IS LESS THAN ITS HEATING SETPOINT, THE CONTROLLER SHALL ENABLE HEATING TO MAINTAIN THE ZONE TEMPERATURE AT ITS HEATING SETPOINT.

      3) UNOCCUPIED:
         a) WHEN THE ZONE IS UNOCCUPIED THE ZONE DAMPER SHALL CONTROL TO ITS MINIMUM UNOCCUPIED AIRFLOW (ADJ.).
         b) WHEN ZONE TEMPERATURE IS LESS THAN ITS UNOCCUPIED HEATING SETPOINT, THE CONTROLLER SHALL ENABLE HEATING TO MAINTAIN THE ZONE TEMPERATURE AT THE SETPOINT.

   F. REHEATING COIL VALVE: THE CONTROLLER SHALL MEASURE THE ZONE TEMPERATURE AND MODULATE THE REHEATING COIL VALVE OPEN ON DROPPING TEMPERATURE TO MAINTAIN ITS HEATING SETPOINT.

   G. REHEATING – HIGH DISCHARGE AIR TEMPERATURE LIMIT: THE CONTROLLER SHALL MEASURE THE DISCHARGE AIR TEMPERATURE AND LIMIT REHEATING IF THE DISCHARGE AIR TEMPERATURE IS MORE THAN 15°F (ADJ.) ABOVE THE ZONE TEMPERATURE.

   H. DISCHARGE AIR TEMPERATURE: THE CONTROLLER SHALL MONITOR THE DISCHARGE AIR TEMPERATURE.

   I. ALARMS SHALL BE PROVIDED AS FOLLOWS:
      1) HIGH ZONE TEMP: IF THE ZONE TEMPERATURE IS GREATER THAN THE COOLING SETPOINT BY A USER DEFINABLE AMOUNT (ADJ.).
      2) LOW ZONE TEMP: IF THE ZONE TEMPERATURE IS LESS THAN THE HEATING SETPOINT BY A USER DEFINABLE AMOUNT (ADJ.).
      3) HIGH DISCHARGE AIR TEMP: IF THE DISCHARGE AIR TEMPERATURE IS GREATER THAN 100°F (ADJ.).
      4) LOW DISCHARGE AIR TEMP: IF THE DISCHARGE AIR TEMPERATURE IS LESS THAN 40°F (ADJ.).
      5) RH VALVE POSITION FAILURE: VALVE FEEDBACK SIGNAL DOES NOT CORRESPOND TO VALVE POSITION.

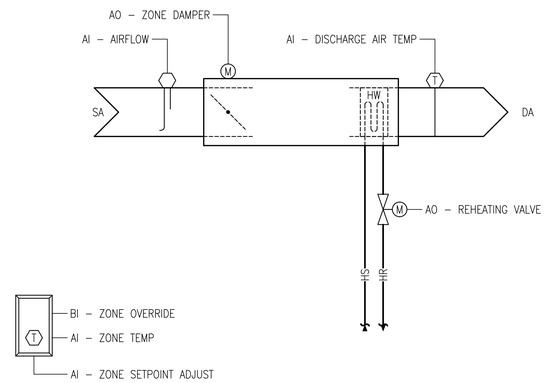

AIR TERMINAL UNIT WITH REHEAT (VH) CONTROL DIAGRAM | B6

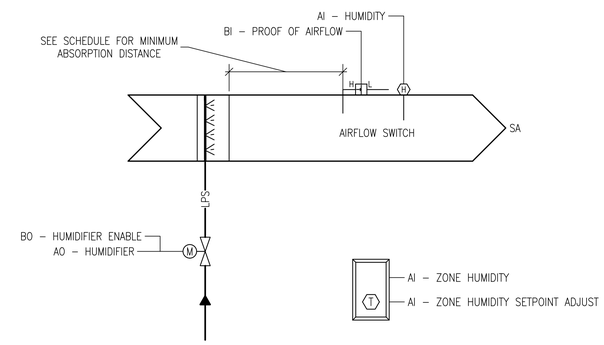

HUMIDIFIER CONTROL DIAGRAM | D6

CONTROL LEGEND

SYMBOL	ABBREV.	INDENTIFICATION
		LOW VOLTAGE WIRING IS PROVIDED AND INSTALLED UNDER DIVISION 15 AND CONDUIT IS INSTALLED UNDER DIVISION 16.
		FAN
		DAMPER – OPPOSED
		FILTER
HW		HOT WATER HEATING COIL
CHW		CHILLED WATER COOLING COIL
		PUMP
M		MOTOR
STARTER		MAGNETIC STARTER
VFD	VFD	VARIABLE FREQUENCY DRIVE
CT	CT	CURRENT SWITCH
DSW	DSW	DISCONNECT SWITCH
		2-WAY CONTROL VALVE
		3-WAY CONTROL VALVE
		TEMPERATURE SENSOR WITH PIPE WELL INSERTION
		TEMPERATURE SENSOR IN DUCT
		HUMIDITY SENSOR IN DUCT
		CARBON DIOXIDE SENSOR IN DUCT
		TEMPERATURE SENSOR
		HUMIDITY SENSOR
		CARBON DIOXIDE SENSOR
		DIFFERENTIAL PRESSURE SENSOR IN DUCT
SD	SD	SMOKE DETECTOR IN DUCT
		DIFFERENTIAL PRESSURE SENSOR IN PIPING OR ACROSS FILTER
		FLOW METER IN PIPING
		FLOW SWITCH IN PIPING
		AIR FLOW SENSOR IN DUCT
	AI	ANALOG INPUT
	AO	ANALOG OUTPUT
	BBD	BAROMETRIC BACKDRAFT DAMPER
	BI	BINARY INPUT
	BO	BINARY OUTPUT
	CCP	CENTRAL CONTROL PANEL
	DHW	DOMESTIC HOT WATER
	DHWR	DOMESTIC HOT WATER RETURN
	EF	EXHAUST FAN
	N.C.	NORMALLY CLOSED
	N.O.	NORMALLY OPEN
	RF	RETURN FAN
	SF	SUPPLY FAN

CONTROLS NOTES

1. CONTROL SYSTEM BASIS OF DESIGN: SIEMENS TO MATCH FACILITY STANDARD.
2. VERIFY ELECTRICAL CHARACTERISTICS WITH ELECTRICAL PLANS PRIOR TO BID AND MATERIAL PURCHASE.
3. CONTROL DIAGRAM IS FUNCTIONAL, SINGLE LINE DIAGRAM. CONTROL CONTRACTOR SHALL SUBMIT DETAILED WIRING DIAGRAM FOR APPROVAL. PRIOR TO PURCHASE OR INSTALLATION.
4. CONTROL CONTRACTOR SHALL FURNISH AND INSTALL LOW VOLTAGE CONTROL WIRING AND CONDUIT FOR LOW VOLTAGE CONTROL WIRING. ALL LOW VOLTAGE WIRING SHALL BE IN CONDUIT.
5. CONTROL CONTRACTOR SHALL COORDINATE, REVIEW AND APPROVE CONTROL RELATED CONDUIT AND JUNCTION BOXES LOCATIONS FOR LINE VOLTAGE WIRING PROVIDED BY ELECTRICAL CONTRACTOR.
6. SEE FLOOR PLANS FOR EQUIPMENT QUANTITY AND LOCATION.
7. CONTROL PANELS AND UNITARY CONTROLLERS SHALL BE PROVIDED AND INSTALLED BY THE CONTROL CONTRACTOR AND POWERED BY THE ELECTRICAL CONTRACTOR.
8. ELECTRICAL CONTRACTOR SHALL POWER CONTROL PANELS AND UNITARY CONTROLLERS. POWER REQUIREMENTS SHALL BE COORDINATED WITH THE CONTROL CONTRACTOR.

CONSTRUCTION DOCUMENTS
FULLY SPRINKLERED

F9

No.	Description	Date
1	SCHEMATIC DESIGN (SD)	10/20/2015
2	DESIGN DEVELOPMENT (DD)	01/18/2016
3	CONSTRUCTION DOCUMENTS (CD)	03/30/2016

CONSULTANTS:

15371
dHA + CALPEC
150 S. ARROYO PARKWAY
SUITE NO. 100
PASADENA, CA. 91105
TEL: (626) 445-8580
FAX: (626) 445-8081

Seals and Signatures

REGISTERED PROFESSIONAL ENGINEER KEVIN TROY GUSTAFSON NO. 31498 MECHANICAL STATE OF CALIFORNIA
EXP 12-31-16

ARCHITECTS/ENGINEERS:

LEO A DALY
PLANNING ARCHITECTURE ENGINEERING INTERIORS
550 South Hope Street, 27th Floor
Los Angeles, California 90071, USA
213-629-0100 F213-629-0070
EST. 1915

Drawing Title: MECHANICAL CONTROL LEGEND, NOTES, AND DIAGRAMS

Approved: Project Director

Project Title: CONSTRUCT OPERATING ROOM #8

Location: 11201 BENTON STREET, LOMA LINDA, CA 92357

Date: 3/30/2016 | Checked: KG | Drawn: dHA+CALPEC

Project Number: 605-14-640

Building Number: 1

Drawing Number: MI501

Dwg. of

Office of Construction and Facilities Management

Department of Veterans Affairs

VA FORM 08-6231

ABBREVIATIONS

AC	ALTERNATING CURRENT
AC	AIR CONDITIONER
AFF	ABOVE FINISHED FLOOR
AFG	ABOVE FINISHED GRADE
AIC	AMPERES INTERRUPTING CAPACITY SYMM
A	AMPERE
AMP	AMPERE
ANN	FIRE ALARM ANNUNCIATOR
ATS	AUTOMATIC TRANSFER SWITCH
AV	AUDIO/VISUAL
BATT	BATTERY
BLDG	BUILDING
BRKR	BREAKER
C	CONDUIT
CB	CIRCUIT BREAKER
CFSD	COMBINATION FIRE SMOKE DAMPER
CIR	CIRCUIT
CKT	CIRCUIT
CO	CONDUIT ONLY WITH PULL ROPE
COM	COMMON
COMM	COMMUNICATION
CONN	CONNECT
CONT	CONTINUE
CT	CURRENT TRANSFORMER
CU	COPPER
DB	DIRECT BURIED
DEF	DUAL ELEMENT FUSE
DISC	DISCONNECT
DN	DOWN
DPDT	DOUBLE-POLE DOUBLE-THROW
DPST	DOUBLE-POLE SINGLE-THROW
EES	ESSENTIAL ELECTRICAL SYSTEMS
EM	EMERGENCY
EMT	ELECTRICAL METALLIC TUBING
EMY	EMERGENCY
ENCL	ENCLOSURE
EOL	END OF LINE
EQUIP	EQUIPMENT
EX	EXISTING
EXIST	EXISTING
F	FUSE
FACP	FIRE ALARM CONTROL PANEL
FLA	FULL LOAD AMPERES
FLEX	FLEXIBLE METALLIC TUBING
G	GROUND
GRD	GROUND
GND	GROUND
GFCI	GROUND FAULT CIRCUIT INTERRUPTER
HID	HIGH INTENSITY DISCHARGE
HOA	HAND-OFF-AUTO SWITCH
HP	HORSEPOWER
HZ	HERTZ
HPF	HIGH POWER FACTOR
IC	INTERRUPTING CAPACITY IN AMPS RMS
IG	ISOLATED GROUND
J	JUNCTION BOX
JB	JUNCTION BOX
J-BOX	JUNCTION BOX
K	KILO
KCMIL	THOUSAND CIRCULAR MILS
KVA	KILOVOLT-AMPERES
KW	KILOWATT
KWH	KILOWATT-HOUR
KVAR	KILOVAR
LCL	LONG CONTINUOUS LOAD
LRA	LOCKED ROTOR AMP
LTG	LIGHTING
LV	LOW VOLTAGE
M	MAGNETIC STARTER COIL
M	MOTOR
M	METER
MCC	MOTOR CONTROL CENTER
MCM	THOUSAND CIRCULAR MILS
MTG	MOUNTING
MTS	MANUAL TRANSFER SWITCH
N	NEUTRAL
NC	NORMALLY CLOSED
NEC	NATIONAL ELECTRIC CODE
NF	NONFUSED
NIC	NOT IN CONTRACT
NO	NORMALLY OPEN
NTS	NOT TO SCALE
2P	2 POLE, SIMILAR FOR OTHER QTY
PB	PULLBOX
PBPU	PREFABRICATED BEDSIDE PATIENT UNIT
PNL	PANEL
PT	POTENTIAL TRANSFORMER
PVC	POLYVINYL CHLORIDE
PWR	POWER
ø PH	PHASE
SCA	SHORT CIRCUIT AMPS
SQ FT	SQUARE FEET
SW	SWITCH
SWBD	SWITCHBOARD
SWGR	SWITCHGEAR
TC	TIME CLOCK
TEL	TELEPHONE
TEMP	TEMPORARY
XFMR	TRANSFORMER
TFMR	TRANSFORMER
TYP	TYPICAL
UG	UNDERGROUND
UON	UNLESS OTHERWISE NOTED
UPS	UNINTERRUPTIBLE POWER SYSTEM
VFD	VARIABLE FREQUENCY DRIVE
WP	WEATHERPROOF
WT	WATERTIGHT

SYMBOLS

FLOOR	CEILING	WALL	GROUNDING SYSTEM
			GROUND PLATE, FLAT TAPPED SIDE TO BE FLUSH WITH FINISHED SURFACE. CADWELD B164-2Q OR EQUIVALENT.
		G	GROUND BUS
		TG	TECHNICAL GROUND BUS
			GROUND ROD, MINIMUM 3/4"ø X 10' LONG
			EXOTHERMIC GROUND CONNECTION
	G		GROUND CONDUCTOR IN CONDUIT

FLOOR	CEILING	WALL	LIGHTING
			LUMINAIRE, AS INDICATED BY LUMINAIRE TYPE. PROVIDE MAXIMUM 6' FLEXIBLE CONDUIT CONNECTION TO LAY-IN TYPE.
			LUMINAIRE, SHADING MEANS ON EMERGENCY POWER, AS INDICATED BY LUMINAIRE TYPE.
			STRIP LUMINAIRE, SURFACE OR PENDENT CEILING MOUNT AS INDICATED BY LUMINAIRE TYPE.
			SURFACE MOUNTED LUMINAIRE AS INDICATED BY LUMINAIRE TYPE.
			RECESSED MOUNTED LUMINAIRE AS INDICATED BY LUMINAIRE TYPE.
			SURFACE MOUNTED WALL WASHER AS INDICATED BY LUMINAIRE TYPE.
			RECESSED MOUNTED WALL WASHER AS INDICATED BY LUMINAIRE TYPE.
			EXIT SIGN; SHADED PORTION INDICATES ILLUMINATED FACE. DIRECTIONAL ARROWS AS INDICATED ON PLANS.
			EMERGENCY LIGHTING UNIT.
			TRACK LIGHTING, SURFACE, PENDENT OR CEILING MOUNTED AS INDICATED BY TYPE. PROVIDE CONFIGURATION AND NUMBER OF FIXTURES AS INDICATED ON ARCHITECTURAL DOCUMENTS. OR SPECIFICATIONS, WHICHEVER IS GREATER.
			COMBINATION EMERGENCY LIGHTING UNIT AND EXIT SIGN; SHADED PORTION INDICATES ILLUMINATED FACE. DIRECTIONAL ARROWS AS INDICATED ON PLANS.

FLOOR	CEILING	WALL	SWITCHING
		S_M	MANUAL MOTOR STARTER WITH THERMAL OVERLOAD NUMBER OF POLES AS REQUIRED
		S_X	SWITCH, +42" UON. SUBSCRIPT INDICATES: X=NONE – SINGLE POLE X=3 – THREE WAY X=a,b,c – LUMINAIRE CONTROLLED X=2 – DOUBLE POLE X=PK – KEY OPERATED WITH PILOT LIGHT X=R – MOMENTARY ON/OFF
		S_{pb}	2-SINGLE POLE SWITCHES, UNDER COMMON PLATE, +42" UON.
		S_{abc}	3-SINGLE POLE SWITCHES, ETC, UNDER COMMON PLATE,+42" UON.
			WALL BOX DIMMER, +42" U.O.N.
			WALL BOX OCCUPANCY SENSOR AND DIMMER
			ROOM TYPE OCCUPANT SENSOR, ARROW INDICATES DIRECTION, SUBSCRIPT INDICATES SWITCH LEG OR CIRCUIT TO BE CONTROLLED.
			ROOM TYPE OCCUPANT SENSOR, ARROWS INDICATE DIRECTION, SUBSCRIPT INDICATES SWITCH LEG OR CIRCUIT TO BE CONTROLLED.
			CORRIDOR TYPE OCCUPANT SENSOR, ARROWS INDICATE DIRECTION, SUBSCRIPT INDICATES SWITCH LEG OR CIRCUIT TO BE CONTROLLED.
			PUSH-BUTTON STATION. +42" U.O.N.

FLOOR	CEILING	WALL	POWER
			SIMPLEX RECEPTACLE, 5-20R UON
			DUPLEX RECEPTACLE, 5-20R UON
			QUADRUPLEX RECEPTACLE, 5-20R UON
X	X	X	SPECIAL RECEPTACLE, REFER TO SPECIAL RECEPTACLE SCHEDULE, THIS SHEET
			CLOCK RECEPTACLE. 5-20R UON.
	J	J	JUNCTION BOX 4" SQUARE MINIMUM FOR WALL OR CEILING MOUNTED
J	J	J	JUNCTION BOX SIZE AS REQUIRED FOR NUMBER OF WIRES

SPECIAL RECEPTACLE SCHEDULE

LETTER	RATING	NEMA	
A	125V,1ø,30A,2P,3W	5-30R	
B	125V,1ø,50A,2P,3W	5-50R	
C	125V,1ø,20A,2P,3W		
D	125/250V,1ø,20A,3P,4W	14-20R	
F	125/250V,1ø,30A,3P,4W	14-30R	
GF	125V,1ø,20A,2P,3W	5-20R	DUPLEX GROUND FAULT INTERRUPTING
H	250V,1ø,15A,2P,3W	6-15R	
J	250V,1ø,20A,2P,3W	6-20R	
K	250V,1ø,30A,2P,3W	6-30R	
L			'L' INDICATES ASSOCIATED RECEPTACLE IS LOCKING TYPE.
M	250V,1ø,50A,2P,3W	6-50R	
N	250V,3ø,20A,3P,4W	15-20R	
P	250V,3ø,30A,3P,4W	15-30R	
R	250V,3ø,50A,3P,4W	15-50R	
S	480V,3ø,30A,3P,4W	L16-30R	

NOTE: NUMBER OF WIRES INCLUDES GROUND.

NUMBER OF WIRES AND CONDUIT SIZE

3	12,1/2"C
4	12,1/2"C
5	12,1/2"C
6	12,1/2"C
7	12,1/2"C
8	12,3/4"C
9	12,3/4"C
3	10,1/2"C
4	10,1/2"C
5	10,3/4"C
6	10,3/4"C
7	10,3/4"C
8	10,1"C
9	10,1"C
2	8,1#10,1/2"C
3	8,1#10,3/4"C
4	8,1#10,3/4"C
5	8,1#10,1"C
6	8,1#10,1"C
7	8,1#10,1"C
8	8,1#10,1"C
9	8,1#10,1"C
2	6,1#10,3/4"C
3	6,1#10,1"C
4	6,1#10,1"C
5	6,1#10,1"C
6	6,1#10,1"C
7	6,1#10,1"C
8	6,1#10,1"C

NOTE:
CONDUIT SIZES ARE MINIMUM. PROVIDE EQUIPMENT GROUND (NOT INDICATED IN WIRE HATCH COUNT). FOR ISOLATED GROUND DEVICES INCLUDE ADDITIONAL ISOLATED GROUND CONDUCTOR.

NUMBER OF WIRES AND CONDUIT SIZE DEDICATED NEUTRAL SYSTEMS

N 2	12,2#12N,1#12G,1/2"C
N 3	12,3#12N,1#12G,1/2"C
N 3	12,3#12N,1#12G,1/2"C
N 4	12,4#12N,1#12G,3/4"C
N 5	12,5#12N,1#12G,3/4"C
N 6	12,6#12N,1#12G,3/4"C
10N 1	10,1#10N,1#10G,1/2"C
10N 2	10,2#10N,1#10G,3/4"C
10N 3	10,3#10N,1#10G,3/4"C
10N 3	10,3#10N,1#10G,3/4"C
10N 4	10,4#10N,1#10G,1"C
10N 5	10,5#10N,1#10G,1"C
10N 6	10,6#10N,1#10G,1"C
8N 1	8,1#8N,1#10G,1/2"C
8N 2	8,2#8N,1#10G,3/4"C
8N 3	8,3#8N,1#10G,1"C
8N 3	8,3#8N,1#10G,1"C
8N 4	8,4#8N,1#10G,1 1/4"C
8N 5	8,5#8N,1#10G,1 1/4"C
8N 6	8,6#8N,1#10G,1 1/4"C
6N 1	6,1#6N,1#10G,3/4"C
6N 2	6,2#6N,1#10G,1"C
6N 3	6,3#6N,1#10G,1 1/4"C
6N 3	6,3#6N,1#10G,1 1/4"C
6N 4	6,4#6N,1#10G,1 1/4"C
6N 5	6,5#6N,1#10G,1 1/2"C
6N 6	6,6#6N,1#10G,1 1/2"C

WIRING

	HOMERUN TO PANELBOARD, CABINET OR TERMINAL BOARD AS INDICATED.
( )	HOMERUN TO SWITCHBOARD OR MCC AS INDICATED. REFER TO SINGLE LINE FOR CONDUIT AND WIRE SIZES.
	HOMERUN TO PANELBOARD. TERMINATE CONDUIT AT ASSOCIATED WIREWAY ON THE INTERSTITIAL FLOOR ABOVE. PULL WIRES THROUGH CONDUIT AND WIREWAY.
	CONDUIT DOWN
	CONDUIT UP
	CONDUIT RUN EXPOSED, PARALLEL WITH STRUCTURE
	CONDUIT RUN UNDERGROUND OR BELOW FLOOR.
	CONDUIT CONCEALED IN WALL OR CEILING.
W	SURFACE WIREMOLD RACEWAY
(X)	MULTIOUTLET RACEWAY. NUMBER IN (X) INDICATES OUTLET SPACING. WHERE MULTIPLE CIRCUITS ARE INDICATED, ALTERNATE CIRCUITS FOR OUTLETS ALONG RACEWAY.

GENERAL ELECTRICAL SYMBOLS

	DISCONNECT SWITCH, 30 AMP MINIMUM UON
	COMBINATION DISCONNECT SWITCH AND MOTOR STARTER
S	MOTOR, 5HP
T	TRANSFORMER
	SURFACE MOUNTED MISCELLANEOUS CABINET AS INDICATED ON PLANS
	FLUSH MOUNTED MISCELLANEOUS CABINET AS INDICATED ON PLANS
	SURFACE MOUNTED PANELBOARD
	FLUSH MOUNTED PANELBOARD
	SWITCHBOARD
	MULTIPLE COMPARTMENT FLOOR BOX
	EXISTING EQUIPMENT/RACEWAYS TO REMAIN
	EXISTING EQUIPMENT/RACEWAYS TO BE REMOVED
	NEW EQUIPMENT/RACEWAYS
SH1A	ELECTRICAL EQUIPMENT DESIGNATED "SH1A"
A 1	SEE NOTE A OR 1 ON THE SAME SHEET
F1 100	LUMINAIRE DESIGNATION F1 = TYPE 100 = TOTAL WATTAGE
AH 1	MECHANICAL EQUIPMENT DESIGNATED "AH-1"
+4'-6"	MOUNTING HEIGHT FROM FINISHED FLOOR TO CENTERLINE OF OUTLET OR EQUIPMENT
MH=4'-6"	MOUNTING HEIGHT FROM FINISHED FLOOR TO BOTTOM OF OUTLET OR EQUIPMENT
AC-1	THERMOSTAT ASSOCIATED WITH AC-1, 1-GANG BOX AND RING AND 3/4" CONDUIT TO THE ASSOCIATED HVAC UNIT.

SINGLE LINE DIAGRAM

	TRANSFORMER, AS NOTED ON SINGLE LINE
	LOW VOLTAGE CIRCUIT BREAKER, 3P UON
G	LOW VOLTAGE CIRCUIT BREAKER WITH GROUND FAULT RELAY AND SHUNT TRIP.
	NON-FUSED DISCONNECT SWITCH, 30A,3P UON
	FUSED DISCONNECT SWITCH, 3P UON
2	MAGNETIC MOTOR STARTER, SIZE-2 INDICATED (SIZE-1 MIN.)
M	DEMAND TYPE KWH METER
M	PROVISION FOR UTILITY COMPANY KWH METER
K	KIRK-KEY INTERLOCK BETWEEN DEVICES
	TRANSFER SWITCH NOTED ATS WHEN AUTOMATIC
	CURRENT TRANSFER, RATIO AS NOTED
AS	AMMETER SWITCH
AM	AMMETER
IQ	ELECTRONIC METER, CUTLER HAMMER IQ ANALYZER CAT. NO. IQA6430, UON.
	GROUND

REMODEL

TYPICAL SYMBOL DESIGNATION FOR:

	EXISTING, DEVICES, FIXTURES AND EQUIPMENT TO REMAIN
	EXISTING, DEVICES, FIXTURES AND EQUIPMENT TO BE REMOVED
	NEW, DEVICES, FIXTURES AND EQUIPMENT
	POINT OF CONDUIT INTERCEPTION
	NEW CONDUIT WITH NEW WIRES
	NEW WIRES IN EXISTING CONDUIT

GENERAL NOTES

A. IT IS THE INTENT OF THESE PLANS AND SPECIFICATIONS THAT A COMPLETE AND WORKABLE ELECTRICAL INSTALLATION BE PROVIDED FOR ALL THE EQUIPMENT DESCRIBED OR SHOWN AS BEING IN THIS CONTRACT. TOWARD THIS END FURNISH ALL LABOR AND TOOLS NECESSARY AND FURNISH AND INSTALL ALL APPARATUS, MATERIALS, AND EQUIPMENT IN A FASHION COMPLYING WITH ALL APPLICABLE CODES, INCLUDING ITEMS REQUIRED BUT NOT NORMALLY SHOWN, SUCH AS LAMPS, COUPLINGS, HANGERS, BRACKETS, CLAMPS, BOXES, CONNECTORS AND HARDWARE.

B. REFER TO SPECIFICATIONS FOR ADDITIONAL REQUIREMENTS FOR SUBMITTALS, TESTING, START-UP, TRAINING AND PROJECT CLOSEOUT.

C. PROCURE ALL PERMITS FROM LEGALLY CONSTITUTED AUTHORITIES, ARRANGE FOR ALL INSPECTIONS AND PAY ALL COSTS FOR FEES AND TESTS IN CONNECTION THEREWITH.

D. COMPLY WITH 2014 NATIONAL ELECTRICAL CODE. NOTHING IN THESE PLANS AUTHORIZES DEVIATION FROM APPLICABLE CODES.

E. ALL ELECTRICAL EQUIPMENT SHALL BE UL APPROVED.

F. PROVIDE A CODE APPROVED DISCONNECT SWITCH WITHIN SIGHT OF EVERY MOTOR. FOR LOCATION OF DISCONNECT SWITCH, COORDINATE WITH DIVISION 23 CONTRACTOR TO DETERMINE THE BEST LOCATION ON SITE TO SUIT THE PURPOSE WHILE REMAINING ACCESSIBLE. FUSIBLE SWITCH IS TO BE READILY ACCESSIBLE.

G. THE ELECTRICAL CONTRACTOR SHALL REVIEW DIVISION 23 DRAWINGS AND SPECIFICATIONS FOR THEIR SCOPE OF SUPPLY AND INSTALLATION AND SHALL COORDINATE WITH THE GENERAL CONTRACTOR IN ORDER TO PROVIDE A FINAL PRODUCT WHICH IS COMPLETE AND FUNCTIONAL. CONDUIT, AND ONLY WIRING OVER 110V FOR CONTROL SHALL BE BY DIVISION 26 CONTRACTOR. REFER TO THE DIVISION 23 PLANS FOR WIRING DIAGRAMS.

H. MOTOR HP RATINGS AND ENCLOSURES SHOWN ARE WHAT IS EXPECTED. THIS INFORMATION IS FOR GUIDANCE ONLY AND DOES NOT LIMIT THE EQUIPMENT SIZE. VERIFY WITH THE SUPPLIERS OF EQUIPMENT FOR MOTOR SIZES, VOLTAGE AND PHASE. NOTIFY THE ENGINEER WHEN MOTOR FURNISHED SIGNIFICANTLY DIFFERS FROM THE EXPECTED RATING INDICATED. MAKE THE NECESSARY ADJUSTMENTS TO WIRING, CONDUIT, DISCONNECT SWITCH, MOTOR STARTER, AND OTHER AFFECTED DEVICES AND MATERIAL TO ACCOMMODATE MOTORS ACTUALLY INSTALLED.

I. COORDINATE ROUTING OF FEEDERS AND HOMERUNS IN COOPERATION WITH OTHER TRADES TO SIMPLIFY INSTALLATION.

J. DO NOT PENETRATE STRUCTURAL ITEMS WITHOUT PRIOR APPROVAL OF STRUCTURAL ENGINEER.

K. INSTALL EXPOSED CONDUITS PARALLEL AND AT RIGHT ANGLES TO NEARBY SURFACES AND STRUCTURAL MEMBERS.

L. ALL CONDUCTORS SHALL BE COPPER, TYPE "THWN-2/THHN" 90 DEGREE INSULATION. ALL LUGS SHALL BE 75 DEGREE RATED, MINIMUM.

M. USE OF NONMETALLIC SHEATHED CABLE (NM OR NMC), ARMORED CABLE (AC), METAL CLAD CABLE (MC) OR FLEXIBLE ALUMINUM CONDUIT IS NOT ALLOWED.

N. USE OF STEEL FLEX IS NOT ALLOWED EXCEPT FOR LENGTHS UP TO 6 FEET FOR FINAL CONNECTION TO VIBRATING EQUIPMENT.

O. REFER TO ARCHITECTURAL REFLECTED CEILING PLANS FOR LUMINAIRE AND OTHER CEILING MOUNTED DEVICE LOCATIONS AND TRIM REQUIREMENTS.

P. MOUNT ALL ELECTRICAL, OUTLETS VERTICALLY 18" ABOVE FINISHED FLOOR UNLESS OTHERWISE NOTED. VERIFY OUTLET HEIGHT ON EACH WALL WITH THE ARCHITECTURAL DRAWINGS.

Q. INSTALL GREEN INSULATED COPPER GROUNDING CONDUCTOR AND CONNECT TO EACH OUTLET, ENCLOSURE, DEVICE, LUMINAIRE, ETC. THE RACEWAYS SHALL NOT BE RELIED UPON FOR 'EQUIPMENT GROUNDING'.

R. PROVIDE BARRIER BETWEEN NORMAL AND EMERGENCY POWER WHEN INSTALLED IN THE SAME ENCLOSURE.

S. LABEL RECEPTACLES, J-BOXES, DISCONNECT SWITCHES AND CONTROL APPARATUS WITH THEIR SERVING CIRCUIT NUMBERS.

T. GANG DEVICES OCCURRING IN THE SAME LOCATION. SET DEVICES NOT GANGED IN THE SAME PLATE AT THE SAME HEIGHT WITH EQUAL SPACING BETWEEN EACH PLATE.

U. COORDINATE THE WORK OF DIVISION 26 WITH OTHER TRADES, NOT LIMITED TO AUDIO-VISUAL, SECURITY, AND INFORMATION SERVICES FOR SCOPE OF SUPPLY AND SERVICE.

V. PROVIDE FIRE STOPPING AT ALL CONDUIT PENETRATIONS OF CEILINGS AND RATED WALLS.

W. SUPPORT THE LUMINAIRES AND CEILING MOUNTED DEVICES TO THE STRUCTURAL MEMBERS INDEPENDENT OF THE T-BAR CEILING. INSTALL TWO GUIDE WIRES TO THE OPPOSITE CORNERS FOR 2X2, 2X4, OR 1X4 FLUORESCENT LUMINAIRES. INSTALL ONE GUIDE WIRE TO DOWNLIGHTS AND EXIT SIGNS.

X. NO SPLICING OF FEEDERS OR BRANCH CIRCUITS SHALL BE DONE WITHOUT PRIOR APPROVAL.

Y. INSTALL WIRING AS INDICATED ON PLANS. DO NOT COMBINE HOMERUNS WITHOUT PRIOR APPROVAL.

Z. EXISTING CONDITIONS AS SHOWN IS BASED ON LIMITED SITE OBSERVATION AND AVAILABLE EXISTING PLANS. THIS CONTRACTOR IS TO VERIFY ON SITE AND REFLECT THE ACTUAL CONDITIONS ON AS-BUILT DOCUMENTS.

AA. ALL RECEPTACLES FED FROM THE EES ARE TO HAVE DISTINCTIVE COLOR TO MATCH THE HOSPITAL'S STANDARDS.

BB. PROVIDE NEW TRANSFORMERS WHICH MEET THE ENERGY EFFICIENCY STANDARDS SET FORTH IN 10 CFR PART 431 (DOE 2016) AT NO ADDITIONAL COST TO THE OWNER, IF NEMA TP-1 RATED TRANSFORMERS FOR UNITS RATED 15 TO 1000 KVA 600 VOLTS AND BELOW ARE NOT AVAILABLE.

CC. FOR ALL NEW PANELBOARDS, PROVIDE AND INSTALL WARNING SIGNS PER NEC 110.16.

DD. FOR ALL THE POWER & SIGNAL OUTLETS, VERIFY THE EXACT LOCATION WITH THE ARCHITECT BEFORE INSTALLATION.

EE. THIS CONTRACTOR IS TO PROVIDE AND INSTALL ALL THE RACEWAY INFRASTRUCTURE FOR THE TEL/DATA, COMMUNICATION AND AV SYSTEMS. THIS INCLUDES, BUT NOT LIMITED TO, CONDUITS AND BOXES. REFER TO THE ET AND TI SERIES PLANS FOR QUANTITY, SIZE, ROUTING AND REQUIREMENTS.

DEMOLITION AND EXTENSION OF EXISTING ELECTRICAL WORK

A. REMOVE, RELOCATE, AND EXTEND EXISTING INSTALLATIONS TO ACCOMMODATE NEW CONSTRUCTION.

B. MAINTAIN ACCESS TO EXISTING ELECTRICAL INSTALLATIONS WHICH REMAIN ACTIVE. MODIFY INSTALLATION OR PROVIDE ACCESS PANEL AS APPROPRIATE.

C. EXTEND EXISTING INSTALLATIONS USING MATERIALS AND METHODS COMPATIBLE WITH EXISTING ELECTRICAL INSTALLATIONS, OR AS SPECIFIED.

D. REMOVE DEMOLISHED MATERIAL FROM PROJECT SITE.

E. CLEAN AND REPAIR EXISTING MATERIALS AND EQUIPMENT WHICH REMAIN OR ARE TO BE REUSED.

F. PATCH SURFACES AND CLOSE OPENINGS RESULTING FROM DEMOLITION OR REMOVAL OF EQUIPMENT.

G. REPAIR AND REFINISH DISTURBED FINISH MATERIALS AND OTHER SURFACES TO MATCH ADJACENT UNDISTURBED SURFACES. INSTALL NEW FIREPROOFING WHERE EXISTING FIRESTOPPING HAS BEEN DISTURBED. REPAIR AND REFINISH MATERIALS AND OTHER SURFACES BY SKILLED MECHANICS OF TRADES INVOLVED.

H. PANELBOARDS: CLEAN EXPOSED SURFACES AND CHECK TIGHTNESS OF ELECTRICAL CONNECTIONS. PROVIDE TYPED CIRCUIT DIRECTORY SHOWING REVISED CIRCUITING ARRANGEMENT.

I. DISCONNECT AND REMOVE LUMINAIRES OR OUTLETS AS INDICATED ON PLAN. REMOVE BRACKETS, STEMS HANGERS AND OTHER ACCESSORIES. REMOVE EXISTING ASSOCIATED CONDUITS AND WIRES BACK TO THE SOURCE OR THE NEXT OUTLET TO REMAIN. RE-WORK WITH NEW WIRES AND CONDUITS TO MAINTAIN CONTINUITY OF EXISTING CIRCUITS AFFECTED BY THE REMOVAL OF THE ABOVE ITEMS AS REQUIRED.

CONSTRUCTION PHASING

A. THE DEMOLITION AND NEW CONSTRUCTION WORK ARE DIVIDED INTO (5) PHASES. REFER TO LAD ARCHITECTURAL PLANS G1008 AND G1008A FOR DETAILS.

B. DURING THE CONSTRUCTION PHASING PROCESS, THIS CONTRACTOR IS TO PROVIDE AND INSTALL TEMPORARY WIRING AS REQUIRED, IN PROJECT AREA ADJACENT TO DEMOLITION WORK, TO MAINTAIN THE EXISTING LIGHTING AND POWER SYSTEMS IN NORMAL OPERATION.

CONSTRUCTION DOCUMENTS
FULLY SPRINKLERED

No.	Description	Date
1	SCHEMATIC DESIGN (SD)	10/20/2015
2	DESIGN DEVELOPMENT (DD)	01/18/2016
3	CONSTRUCTION DOCUMENTS (CD)	03/30/2016

CONSULTANTS:

(SEE PROJECT TEAM DIRECTORY ON G1000 COVER SHEET)

KOCHER SCHIRRA GOHARIZI
Consulting Engineers, Inc.
111 N JACKSON SUITE 131 GLENDALE CA 91206-4371
PHONE: 818.240.5630 FAX: 818.240.5144

Seals and Signatures

REGISTERED PROFESSIONAL ENGINEER
MAZIAR K. MATHEVOSIAN
No. E-17015
9/30/2017
ELECTRICAL
STATE OF CALIFORNIA

ARCHITECTS/ENGINEERS:

LEO A DALY
PLANNING ARCHITECTURE ENGINEERING INTERIORS
550 South Hope Street, 27 thFloor
Los Angeles, California 90071, USA
213-629-0100 F213-629-0070
EST. 1915

Drawing Title	ELECTRICAL LEGEND AND GENERAL NOTES
Approved: Project Director	
Project Title	CONSTRUCT OPERATING ROOM #8
Location	11201 BENTON STREET LOMA LINDA, CA 92357
Date	03/30/2016
Checked	TC
Drawn	JR
Project Number	605-14-640
Building Number	1
Drawing Number	E001

Office of Construction and Facilities Management
Department of Veterans Affairs

VA FORM 08-6231

SCALE: 1/4"=1'-0"

SHEET NOTES

1. DISCONNECT AND REMOVE. REMOVE WIRES BACK TO SOURCE. REMOVE CONDUITS BACK TO EXISTING WIREWAYS IN INTERSTITIAL FLOOR ABOVE.
2. ALL NOTES UNDER THE "DEMOLITION AND EXTENSION OF EXISTING ELECTRICAL WORK" ON SHEET E001 APPLY.

KEY PLAN

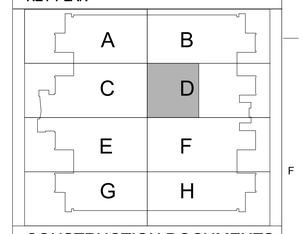

CONSTRUCTION DOCUMENTS
FULLY SPRINKLERED

No.	Description	Date
1	SCHEMATIC DESIGN (SD)	10/20/2015
2	DESIGN DEVELOPMENT (DD)	01/18/2016
3	CONSTRUCTION DOCUMENTS (CD)	03/30/2016

CONSULTANTS:

(SEE PROJECT TEAM DIRECTORY ON GI000 COVER SHEET)

KOCHER SCHIRRA GOHARIZI
Consulting Engineers, Inc.
111 N. JACKSON SUITE 121 GLENDALE CA 91206-4371
PHONE: 818.240.5630 FAX: 818.240.5144

Seals and Signatures

REGISTERED PROFESSIONAL ENGINEER
RAMIK MATTEVOSIAN
No. E-17015
9/30/2017
ELECTRICAL
STATE OF CALIFORNIA

ARCHITECTS/ENGINEERS:

LEO A DALY
550 South Hope Street, 27 th Floor
Los Angeles, California 90071, USA
213-629-0100 F213-629-0070

PLANNING
ARCHITECTURE
ENGINEERING
INTERIORS

EST. 1915

Drawing Title
LIGHTING DEMOLITION PLAN

Approved: Project Director

Project Title
CONSTRUCT OPERATING ROOM #8

Location
11201 BENTON STREET
LOMA LINDA, CA 92357

Date	Checked	Drawn
03/30/2016	TC	JR

Project Number
605-14-640

Building Number
1

Drawing Number
ED101

Office of Construction and Facilities Management

Department of Veterans Affairs

VA FORM 08-6231

SCALE: 1/4"=1'-0"

SHEET NOTES

1. DISCONNECT AND REMOVE. REMOVE CONDUIT AND WIRES TO THE SOURCE OR THE NEXT OUTLET TO REMAIN.
2. EXISTING EQUIPMENT IS TO REMAIN.
3. DISCONNECT AND REMOVE PREFABRICATED HEADWALL.
4. ALL NOTES UNDER THE "DEMOLITION AND EXTENSION OF EXISTING ELECTRICAL WORK" ON SHEET E001 APPLY.
5. REMOVE THE RECEPTACLES FOR WALL MOUNTED MONITORS AND ASSOCIATED WIRING TO FACILITATE THE WALL DEMOLITION. RELOCATE THE RECEPTACLES AND EXTEND THE CIRCUIT WIRING TO THE TEMPORARY LOCATION AS REQUIRED. REINSTALL THE RECEPTACLES AND WIRING TO MATCH THE EXISTING CONDITION WHEN THE NEW WALL IS BUILT.
6. TEMPORARY LOCATION FOR THE WALL MOUNTED MONITORS' RECEPTACLES.

KEY PLAN

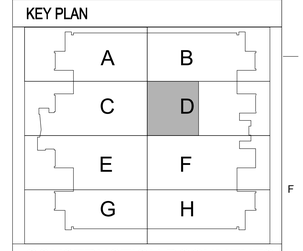

CONSTRUCTION DOCUMENTS
FULLY SPRINKLERED

No.	Description	Date
1	SCHEMATIC DESIGN (SD)	10/20/2015
2	DESIGN DEVELOPMENT (DD)	01/18/2016
3	CONSTRUCTION DOCUMENTS (CD)	03/30/2016

CONSULTANTS:

(SEE PROJECT TEAM DIRECTORY ON GI000 COVER SHEET)

KOCHER SCHIRRA GOHARIZI
Consulting Engineers, Inc.
111 N JACKSON SUITE 121 GLENDALE CA 91206-4371
PHONE: 818.240.5630 FAX: 818.240.5144

Seals and Signatures

REGISTERED PROFESSIONAL ENGINEER
NAZMIK K. MATHEOSSIAN
No. E-17015
9/30/2017
ELECTRICAL
STATE OF CALIFORNIA

ARCHITECTS/ENGINEERS:

LEO A DALY
PLANNING
ARCHITECTURE
ENGINEERING
INTERIORS
550 South Hope Street, 27 th Floor
Los Angeles, California 90071, USA
213-629-0100 F213-629-0070
EST. 1915

Drawing Title
POWER DEMOLITION PLAN

Approved: Project Director

Project Title
CONSTRUCT OPERATING ROOM #8

Location
11201 BENTON STREET
LOMA LINDA, CA 92357

Date 03/30/2016 | Checked TC | Drawn JR

Project Number 605-14-640

Building Number 1

Drawing Number
ED102

Office of Construction and Facilities Management

Department of Veterans Affairs

VA FORM 08-6231

SCALE: 1/4"=1'-0"

SHEET NOTES

1. CONNECT TO THE EXISTING EES LIFE/SAFETY LIGHTING CIRCUIT SERVING THE AREA. VERIFY ACTUAL CIRCUIT NUMBER ON SITE.
2. CONNECT TO EXISTING EES CRITICAL BRANCH CIRCUIT. VERIFY ACTUAL CIRCUIT NUMBER ON SITE.
3. INSTALL ON INTERSTITIAL FLOOR ABOVE.
4. TO WIREWAY FOR 4CL3-18 ON INTERSTITIAL FLOOR ABOVE.
5. PROVIDE AND INSTALL COMPLETE LOW VOLTAGE LIGHTING CONTROL WIRING IN CONDUIT AMONG DIMMERS AND LUMINAIRES.
6. PRE-SET 0-10V 120-277V 3 WAY DIMMER, LUTRON DIVA # DV STV OR APPROVED EQUAL. COLOR AND FINISH BY THE ARCHITECT.
7. TO WIREWAY FOR LTG INV A ON INTERSTITIAL FLOOR ABOVE.
8. ALL WALLS OF THIS ROOM HAVE LEAD LINED DRYWALL CONSTRUCTION PROVIDE AND INSTALL LEAD LINING TO COVER BEHIND ALL SIDES OF ALL OUTLET BOXES TO MAINTAIN THE X-RAY RADIATION PROTECTION.
9. DUAL TECHNOLOGY TYPE WITH POWER PACK. LUTRON # LOS-CDT-2000 AND PP-DV OR APPROVED EQUAL.
10. 0-10V TYPE, LUTRON MAESTRO # MS-Z101 OR APPROVED EQUAL.
11. PROVIDE COMPLETE LINE AND LOW VOLTAGE WIRING IN CONDUIT AS REQUIRED.
12. EMERGENCY POWER DIMMER CONTROL. LVS # EPC-1-D OR APPROVED EQUAL. REFER TO DETAIL F8, SHEET E401 FOR WIRING DIAGRAM.

KEY PLAN

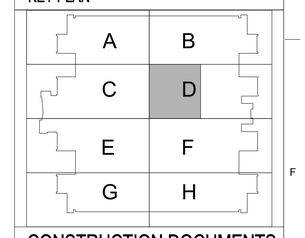

CONSTRUCTION DOCUMENTS
FULLY SPRINKLERED

No.	Description	Date
1	SCHEMATIC DESIGN (SD)	10/20/2015
2	DESIGN DEVELOPMENT (DD)	01/18/2016
3	CONSTRUCTION DOCUMENTS (CD)	03/30/2016

CONSULTANTS:

(SEE PROJECT TEAM DIRECTORY ON GI000 COVER SHEET)

KOCHER SCHIRRA GOHARIZI
Consulting Engineers, Inc.
111 N JACKSON SUITE 121 GLENDALE CA 91206-4371
PHONE: 818.240.5630 FAX: 818.240.5144

Seals and Signatures

REGISTERED PROFESSIONAL ENGINEER
RAMIK MATHEVOSIAN
No. E-17015
9/20/2017
ELECTRICAL
STATE OF CALIFORNIA

ARCHITECTS/ENGINEERS:

LEO A DALY
PLANNING
ARCHITECTURE
ENGINEERING
INTERIORS
550 South Hope Street, 27 th Floor
Los Angeles, California 90071, USA
213-629-0100 F213-629-0070
EST. 1915

Drawing Title
LIGHTING PLAN

Approved: Project Director

Project Title
CONSTRUCT OPERATING ROOM #8

Location
11201 BENTON STREET
LOMA LINDA, CA 92357

Date 03/30/2016 | Checked TC | Drawn JR

Project Number 605-14-640

Building Number 1

Drawing Number
EL101

Office of Construction and Facilities Management

Department of Veterans Affairs

VA FORM 08-6231

4:\VA\11981_VALL_OR Relocation\Drawings\Elec\Plot Sheets\Electrical\11981el101.dwg Plotted: March 24, 2016 5:52 PM jamgo (Last Saved: March 24, 2016 5:05 PM jamgo)

SCALE: 1/4"=1'-0"

SHEET NOTES

1. CONNECT TO AUTOMATIC DOOR.
2. WAVE ACTIVATED DOOR OPERATOR BY OTHERS FOR AUTOMATIC DOOR. PROVIDE AND INSTALL BOX, SIZE TO SUIT, AND 3/4" CONDUIT FOR WIRING BY OTHERS.
3. GROUND AND POWER MODULE WITH (4) GROUND JACKS AND (4) DUPLEX RECEPTACLES.
4. FOR COMPUTER STATION.
5. FOR SINK FAUCET POWER SUPPLY.
6. FOR SCRUBS AUTOMATED DISPENSER.
7. LABEL SWITCH PLATE TO READ "PRIVACY GLASS CONTROL".
8. FOR REFRIGERATOR.
9. FOR MICROWAVE.
10. FOR COFFEE MAKER.
11. FOR DISPOSAL. PROVIDE AND INSTALL POWER CORD.
12. CONNECT TO INSTA-HOT.
13. 30A-2P 600V RATED HEAVY DUTY SWITCH.
14. FOR MONITOR, VERIFY EXACT LOCATION BEFORE ROUGH-IN.
15. INSTALL ON INTERSTITIAL FLOOR ABOVE.
16. TO WIREWAY 3LLD-2 ON THE INTERSTITIAL FLOOR ABOVE.
17. TO WIREWAY 3LLD-1 ON THE INTERSTITIAL FLOOR ABOVE.
18. FOR DRINKING FOUNTAIN.
19. STUB 1" CO TO INTERSTITIAL FLOOR ABOVE AND CAP FOR FUTURE REMOTE MONITORING.
20. VERIFY NEMA CONFIGURATION WITH VA.
21. FOR STRYKER 55" LCD MONITOR.
22. VERIFY WITH STRYKER FOR EXACT LOCATION BEFORE INSTALLATION.
23. FOR STRYKER ROUTER.
24. FOR STRYKER TOUCH PANEL.
25. FOR STRYKER DIGITAL CAPTURE DEVICE.
26. TO INTERSTITIAL FLOOR ABOVE. SEE SHEET E102 FOR CONTINUATION.
27. TO WIREWAY FOR 2CL3 ON THE INTERSTITIAL FLOOR ABOVE.
28. CONNECT TO THE TELETOM JUNCTION BOX FOR BRAKE AND MOTOR CIRCUITS.
29. CONNECT TO THE TELETOM JUNCTION BOX FOR RECEPTACLE AND MONITOR CIRCUITS.
30. CONNECT TO STRYKER SK ENCLOSURE FOR SURGICAL LIGHTS.
31. CONNECT TO STRYKER MONITOR CIRCUIT.
32. FOR WARMING CABINET.
33. REFER TO DETAIL F1, SHEET E401 FOR WORK RELATED TO THE STRYKER MEDICAL EQUIPMENT.
34. TO WIREWAY FOR 4CL3 ON THE INTERSTITIAL FLOOR ABOVE.
35. REFER TO DETAIL C1, SHEET E401 FOR MORE INFORMATION.
36. ALL WALLS OF THIS ROOM HAVE LEAD LINED DRYWALL CONSTRUCTION. PROVIDE AND INSTALL LEAD LINING TO COVER BEHIND ALL SIDES OF ALL OUTLET BOXES TO MAINTAIN THE X-RAY RADIATION PROTECTION.
37. CONNECT TO CLOCK AND ELAPSE TIMER. PROVIDE AND INSTALL COMPLETE WIRING IN CONDUIT FOR ALL REMOTE CONTROL.
38. INSTALL SWITCHABLE PRIVACY GLASS POWER MODULE IN THE INTERSTITIAL SPACE.
39. CONNECT TO SWITCHABLE PRIVACY GLASS POWER LEADS AS REQUIRED.

KEY PLAN

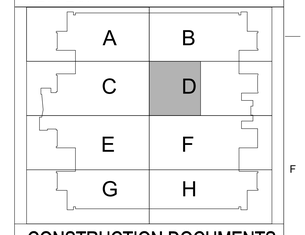

CONSTRUCTION DOCUMENTS
FULLY SPRINKLERED

No.	Description	Date
1	SCHEMATIC DESIGN (SD)	10/20/2015
2	DESIGN DEVELOPMENT (DD)	01/18/2016
3	CONSTRUCTION DOCUMENTS (CD)	03/30/2016

CONSULTANTS:

(SEE PROJECT TEAM DIRECTORY ON GI000 COVER SHEET)

KOCHER SCHIRRA GOHARIZI
Consulting Engineers, Inc.
111 N JACKSON SUITE 121 GLENDALE CA 91206-4371
PHONE: 818.240.5630 FAX: 818.240.5144

Seals and Signatures

REGISTERED PROFESSIONAL ENGINEER ARAMIK MATREVOSYAN No. E-17015 3/09/2017 ELECTRICAL STATE OF CALIFORNIA

ARCHITECTS/ENGINEERS:

LEO A DALY
PLANNING ARCHITECTURE ENGINEERING INTERIORS
550 South Hope Street, 27 th Floor
Los Angeles, California 90071, USA
213-629-0100 F213-629-0070
EST. 1915

Drawing Title
POWER PLAN

Approved: Project Director

Project Title
CONSTRUCT OPERATING ROOM #8

Location
11201 BENTON STREET
LOMA LINDA, CA 92357

Date 03/30/2016 | Checked TC | Drawn JR

Project Number 605-14-640

Building Number 1

Drawing Number
EP101

Office of Construction and Facilities Management
Department of Veterans Affairs

VA FORM 08-6231

SCALE: 1/8"=1'-0"

SHEET NOTES

1. REFER TO SHEET ED101 FOR LIGHTING DEMOLITION PLAN.
2. REFER TO SHEET ED102 FOR POWER DEMOLITION PLAN.
3. REFER TO SHEET EL101 FOR LIGHTING PLAN.
4. REFER TO SHEET EP101 FOR POWER PLAN.
5. 4.8KW 277V INPUT 277V OUTPUT LIGHTING INVERTER WITH 10 YEAR DESIGN LIFE MAINTENANCE FREE VRLA LEAD-CALCIUM BATTERY, IGBT CIRCUITY INVERTER, (5) 20A-1P OUTPUT BREAKERS, (2) YEARS WARRANTY, SEISMIC QUALIFIED, FACTORY START-UP AND UL 924 LISTED. UPON NORMAL POWER OUTAGE, THE SYSTEM WILL AUTOMATICALLY TRANSFER TO EMERGENCY MODE WITHOUT INTERRUPTION TO CONNECTED LOADS. DC BATTERY DERIVED EMERGENCY POWER IS INVERTED TO AC POWER AND SUPPLIED IN A PURE SINE WAVE OUTPUT FORM FOR 90 MINUTES. WHEN NORMAL POWER IS RESTORED, THE SYSTEM WILL AUTOMATICALLY PROVIDE POWER TO CONNECTED LOADS AND WILL BRING THE BATTERIES TO FULL CHARGE WITHIN UL TIME STANDARD. DUAL LITE # D-277-48-S-277-C-20-05-S-FSL OR APPROVED EQUAL.
6. EXISTING EQUIPMENT IS TO REMAIN.
7. RELOCATE EXISTING SURFACE MOUNTED DUPLEX RECEPTACLE TO MAKE ROOM FOR THE NEW EQUIPMENT.

KEY PLAN

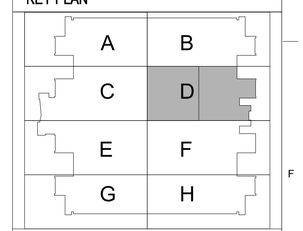

CONSTRUCTION DOCUMENTS
FULLY SPRINKLERED

No.	Description	Date
1	SCHEMATIC DESIGN (SD)	10/20/2015
2	DESIGN DEVELOPMENT (DD)	01/18/2016
3	CONSTRUCTION DOCUMENTS (CD)	03/30/2016

CONSULTANTS:

(SEE PROJECT TEAM DIRECTORY ON GI000 COVER SHEET)

KOCHER SCHIRRA GOHARIZI
Consulting Engineers, Inc.
111 N JACKSON SUITE 121 GLENDALE CA 91206-4371
PHONE: 818.240.5630 FAX: 818.240.5144

Seals and Signatures

REGISTERED PROFESSIONAL ENGINEER
RAMIK MATHEVOSIAN
No. E-17015
9/30/2017
ELECTRICAL
STATE OF CALIFORNIA

ARCHITECTS/ENGINEERS:

LEO A DALY
PLANNING
ARCHITECTURE
ENGINEERING
INTERIORS
550 South Hope Street, 27 th Floor
Los Angeles, California 90071, USA
213-629-0100 F213-629-0070
EST. 1915

Drawing Title
PARTIAL 3RD FLOOR ELECTRICAL PLAN

Approved: Project Director

Project Title
CONSTRUCT OPERATING ROOM #8

Location
11201 BENTON STREET
LOMA LINDA, CA 92357

Date	Checked	Drawn
03/30/2016	TC	JR

Project Number
605-14-640

Building Number
1

Drawing Number
E101

Office of Construction and Facilities Management

Department of Veterans Affairs

VA FORM 08-6231

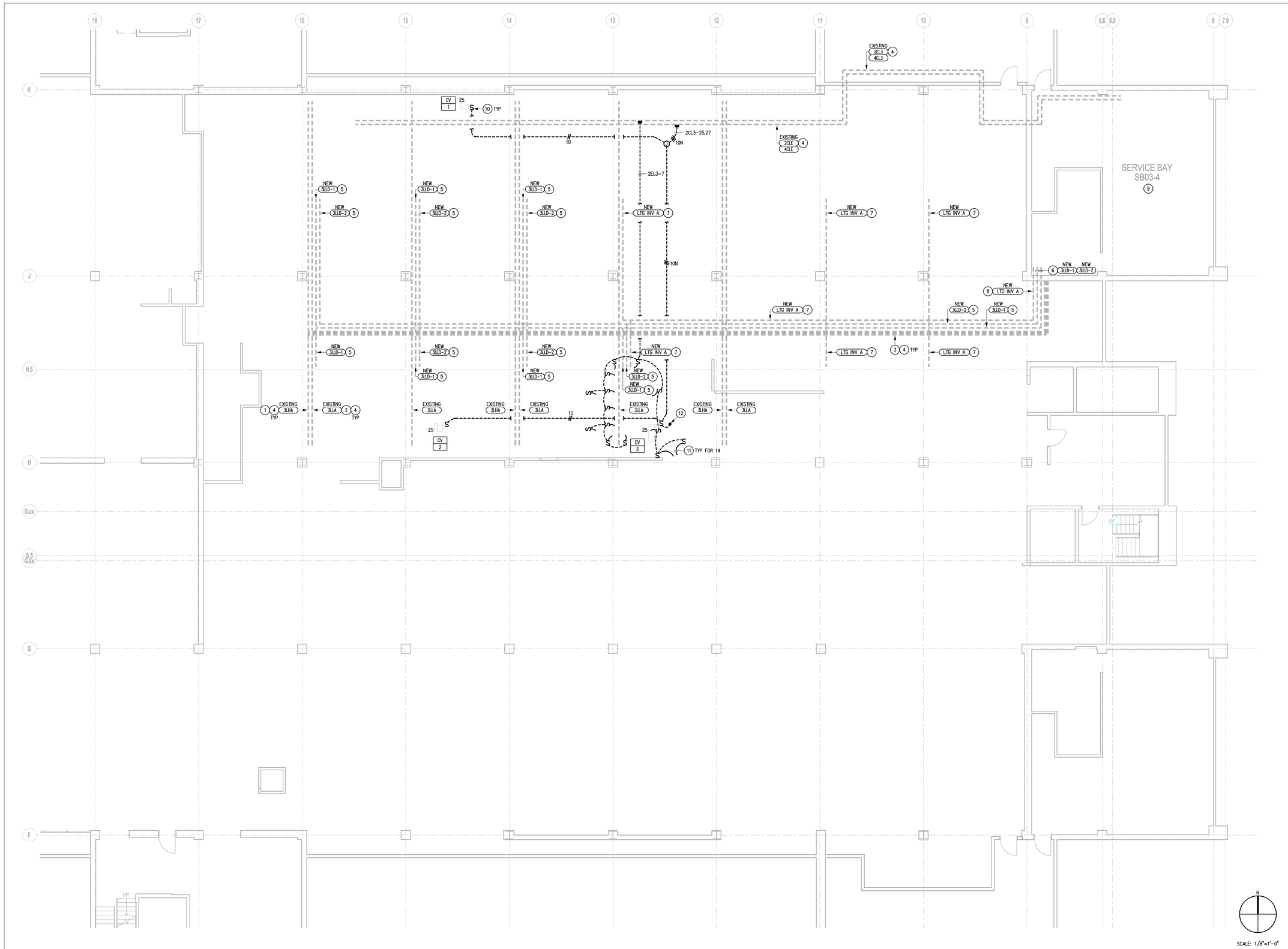

SHEET NOTES

1. EXISTING WIREWAY FOR PANEL 3LHA CIRCUIT WIRES.
2. EXISTING WIREWAY FOR PANEL 3LLA CIRCUIT WIRES.
3. EXISTING WIREWAYS HOMERUN TO PANELS IN ELECTRICAL ROOM BELOW.
4. APPROXIMATE LOCATION IS SHOWN. VERIFY ON SITE.
5. PROVIDE AND INSTALL 4"x4" HINGED COVER METAL WIREWAY, LENGTH AS REQUIRED, WITH COMPLETE FITTINGS AND SUPPORT STRUCTURE. SUGGESTED ROUTE IS SHOWN. VERIFY ON SITE FOR PROPER CLEARANCE.
6. EXTEND WIREWAYS TO PANEL 3LLD BELOW. SEE SHEET E101 FOR LOCATION.
7. PROVIDE AND INSTALL 3"x3" HINGED COVER METAL WIREWAY, LENGTH AS REQUIRED, WITH COMPLETE FITTINGS AND SUPPORT STRUCTURE. SUGGESTED ROUTE IS SHOWN. VERIFY ON SITE FOR PROPER CLEARANCE.
8. EXTEND WIREWAY TO LIGHTING INVERTER UNIT "LTG INV A" BELOW. SEE SHEET E101 FOR LOCATION.
9. REFER TO SHEET E101 FOR ELECTRICAL EQUIPMENT LAYOUT.
10. 20A, 120V LOCAL DISCONNECT SWITCH.
11. CONNECT TO CFSD. MAKE CONNECTION TO THE ASSOCIATED FIRE ALARM CONTROL MODULE CONTACT. UPON DETECTION OF SMOKE IN THE ROBOTIC OR 3F-33, ALL CFSDS WILL BE CLOSED. PROVIDE COMPLETE WIRING IN CONDUIT AS REQUIRED.
12. TO MGA-1 BELOW. SEE SHEET EP101 FOR CONTINUATION.

KEY PLAN

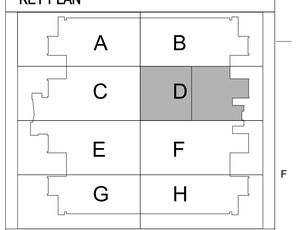

CONSTRUCTION DOCUMENTS
FULLY SPRINKLERED

No.	Description	Date
1	SCHEMATIC DESIGN (SD)	10/20/2015
2	DESIGN DEVELOPMENT (DD)	01/18/2016
3	CONSTRUCTION DOCUMENTS (CD)	03/30/2016

CONSULTANTS:

(SEE PROJECT TEAM DIRECTORY ON GI000 COVER SHEET)

KOCHER SCHIRRA GOHARIZI
Consulting Engineers, Inc.
111 N JACKSON SUITE 121 GLENDALE CA 91206-4371
PHONE: 818.240.5630 FAX: 818.240.5144

Seals and Signatures

REGISTERED PROFESSIONAL ENGINEER
RAMIK MATHEVOSIAN
No. E-17015
9/30/2017
ELECTRICAL
STATE OF CALIFORNIA

ARCHITECTS/ENGINEERS:

LEO A DALY
PLANNING
ARCHITECTURE
ENGINEERING
INTERIORS
550 South Hope Street, 27 th Floor
Los Angeles, California 90071, USA
213-629-0100 F213-629-0070
EST. 1915

Drawing Title
PARTIAL 3RD FLOOR INTERSTITIAL ELECTRICAL PLAN

Approved: Project Director

Project Title
CONSTRUCT OPERATING ROOM #8

Location
11201 BENTON STREET
LOMA LINDA, CA 92357

Date	Checked	Drawn
03/30/2016	TC	JR

Project Number
605-14-640

Building Number
1

Drawing Number
E102

Office of Construction and Facilities Management

Department of Veterans Affairs

VA FORM 08-6231

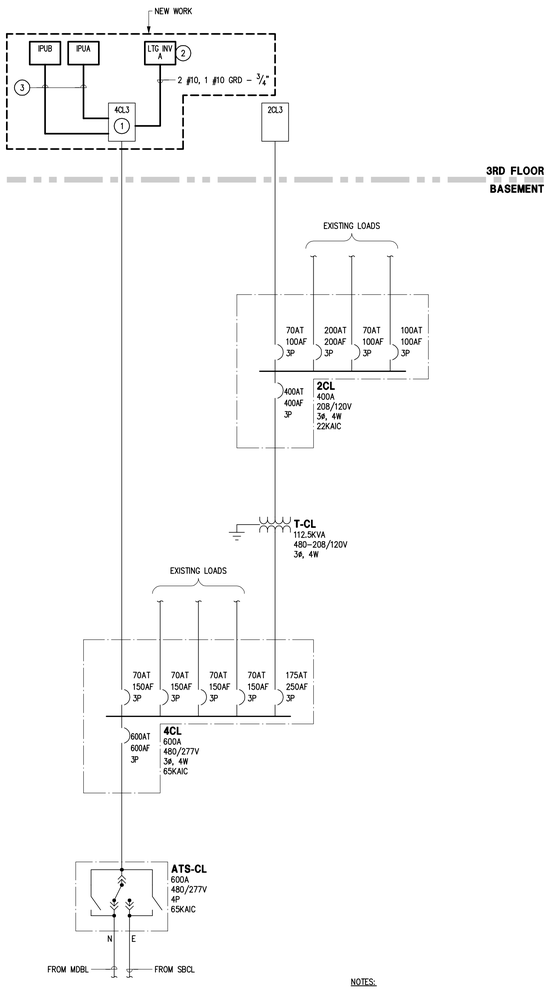

NOTES:

1. PROVIDE AND INSTALL NEW BREAKERS, TYPE TO MATCH EXISTING.
2. LIGHTING INVERTER.
3. REFER TO SHEET EP101 FOR FEEDER SIZE.

EXISTING CRITICAL POWER SYSTEM | NONE | F3

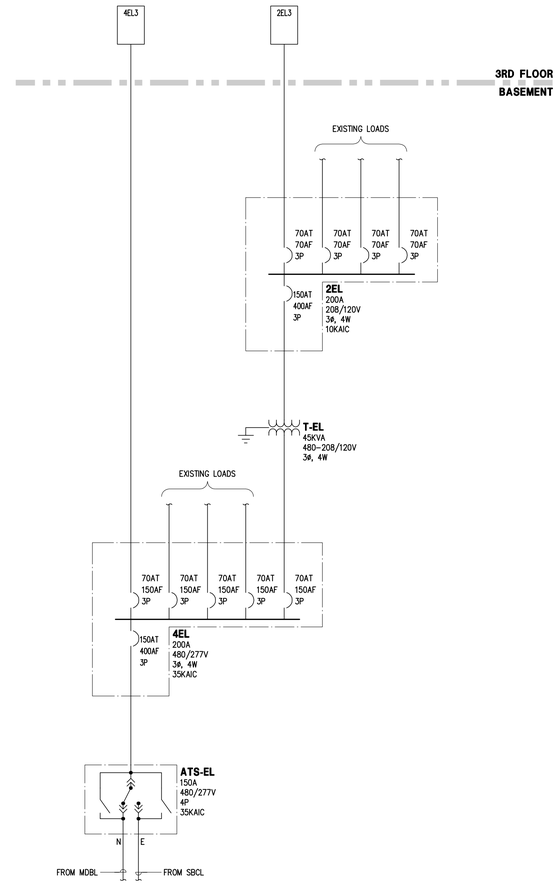

EXISTING LIFE SAFETY SYSTEM | NONE | F6

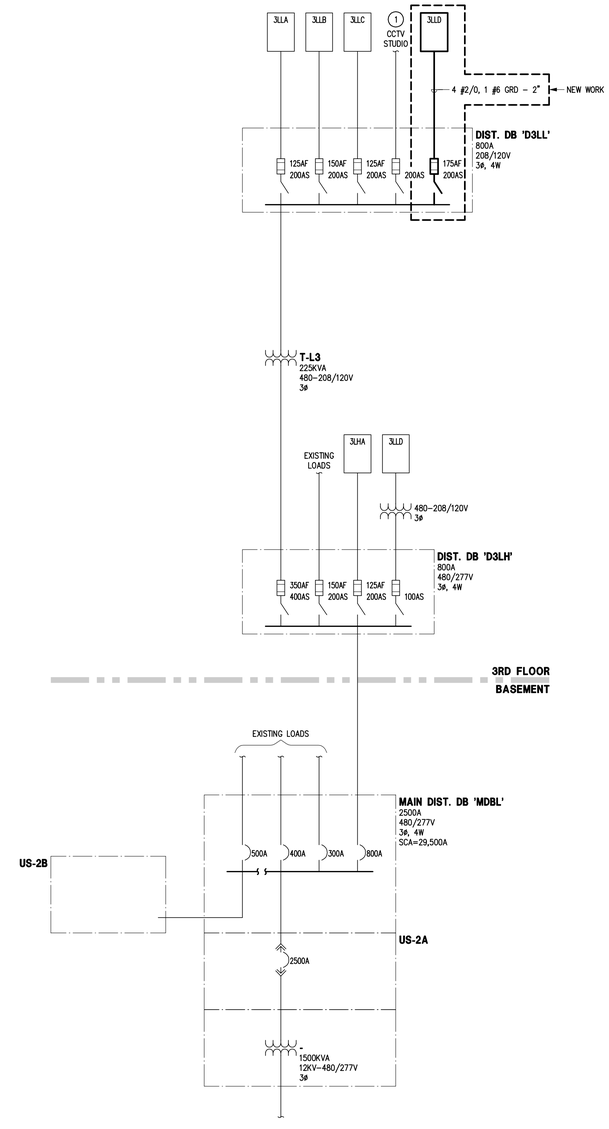

DIST. BD D3LL LOAD SCHEDULE	
ITEM	LOADS (KVA)
EXIST. PANEL 3LLA DEMAND	8.2
EXIST. PANEL 3LLA DEMAND x 1.25	10.3
EXIST. PANEL 3LLB DEMAND	27.8
EXIST. PANEL 3LLB DEMAND x 1.25	34.8
EXIST. PANEL 3LLC DEMAND	13.9
EXIST. PANEL 3LLC DEMAND x 1.25	17.4
TOTAL EXISTING PANELS DEMAND	62.5
PANEL 3LLD	27.4
TOTAL	89.9

NOTES:

1. INACTIVE EXISTING LOAD.

EXISTING NORMAL SYSTEM | NONE | F9

CONSTRUCTION DOCUMENTS
FULLY SPRINKLERED

No.	Description	Date
1	SCHEMATIC DESIGN (SD)	10/20/2015
2	DESIGN DEVELOPMENT (DD)	01/18/2016
3	CONSTRUCTION DOCUMENTS (CD)	03/30/2016

CONSULTANTS:

(SEE PROJECT TEAM DIRECTORY ON GI000 COVER SHEET)

KOCHER SCHIRRA GOHARIZI
Consulting Engineers, Inc.
111 N JACKSON SUITE 121 GLENDALE CA 91206-4371
PHONE: 818.240.5630 FAX: 818.240.5144

Seals and Signatures

REGISTERED PROFESSIONAL ENGINEER
RAZMIK MATHEVOSIAN
No. E-17015
9/30/2017
ELECTRICAL
STATE OF CALIFORNIA

ARCHITECTS/ENGINEERS:

LEO A DALY
PLANNING
ARCHITECTURE
ENGINEERING
INTERIORS
550 South Hope Street, 27 th Floor
Los Angeles, California 90071, USA
213-629-0100 F213-629-0070
EST. 1915

Drawing Title
PARTIAL SINGLE LINE DIAGRAMS AND LOAD SCHEDULES

Approved: Project Director

Project Title
CONSTRUCT OPERATING ROOM #8

Location
11201 BENTON STREET
LOMA LINDA, CA 92357

Date	Checked	Drawn
03/30/2016	TC	JR

Project Number
605-14-640

Building Number
1

Drawing Number
E201

Office of Construction and Facilities Management

Department of Veterans Affairs

VA FORM 08-6231

PANEL IPUA (NEW)

120 VOLTS · 1 PHASE · 2 WIRE
PANEL: IPUA (NEW) · LOCATION · KAIC · KSCA
MAIN BREAKER · AMP BUSSING · NONE NEUTRAL BUS · IG BUS

LOCATION	VA L1	VA L2	LTG	REC	MIS	CIR	BKR	BKR	CIR	MIS	REC	LTG	VA L1	VA L2	LOCATION
WALL RECEPTACLE	90		–	–	–	1	20A	20A	2	–	–	–	90		CEILING RECEPTACLE
–		90	–	–	–		2P	2P		–	–	–		90	–
WALL RECEPTACLE	90		–	–	–	3	20A	20A	4	–	–	–	180		TELETOM RECEPTACLE
–		90	–	–	–		2P	2P		–	–	–		180	–
WALL RECEPTACLE	90		–	–	–	5	20A	20A	6	–	–	–	180		TELETOM RECEPTACLE
–		90	–	–	–		2P	2P		–	–	–		180	–
WALL RECEPTACLE	90		–	–	–	7	20A	20A	8	–	–	–	180		TELETOM RECEPTACLE
–		90	–	–	–		2P	2P		–	–	–		180	–
WALL RECEPTACLE	90		–	–	–	9	20A	20A	10	–	–	–	75		TELETOM MONITOR
–		90	–	–	–		2P	2P		–	–	–		75	–
WALL RECEPTACLE	90		–	–	–	11	20A	20A	12	–	–	–	120		SURGICAL LIGHTS
–		90	–	–	–		2P	2P		–	–	–		120	–
WALL RECEPTACLE	90		–	–	–	13	20A	20A	14	–	–	–	120		SURGICAL LIGHTS
–		90	–	–	–		2P	2P		–	–	–		120	–
WALL RECEPTACLE	90		–	–	–	15	20A	20A	16	–	–	–	120		SURGICAL LIGHTS
–		90	–	–	–		2P	2P		–	–	–		120	–

φ A= 1785 VA · φ B= 1785 VA
TOTAL CONNECTED LOAD: 3570 VA OR 29.8 AMPS @ 120 VOLTS - 1 ø
LCL: 0 VA x 25% = 0 VA · RECEPTACLE LOAD: 0 x 180 = 0 VA · GENERAL LOAD: 3570 VA
FDL: 3570 VA OR 29.8 AMPS

PANEL 3LHA (EXISTING)

480/277 VOLTS · 3 PHASE · 4 WIRE
PANEL: 3LHA (EXISTING) · LOCATION · KAIC · KSCA
NONE MAIN BREAKER · 250 AMP BUSSING · 100% NEUTRAL BUS · WITHOUT IG BUS

LOCATION	φA	φB	φC	LTG	REC	MIS	CIR	BKR	BKR	CIR	MIS	REC	LTG	φA	φB	φC	LOCATION
EX. CORRIDOR NIGHT LIGHTS	0			–	–	–	1	20–1	20–1	2	–	–	–	0			EX. PHY. EXAM CONS.
EX. EXIT LIGHTS		0		–	–	–	3	20–1	20–1	4	–	–	–		0		EX. CAST PAT. HOLD
EX. CORRIDOR			0	–	–	–	5	20–1	20–1	6	–	–	–			0	EX. NURSE CK. LOUNGE
EX. RES., INV. ROOM	0			–	–	–	7	20–1	20–1	8	–	–	–	0			EX. CORRIDOR O.R.
EX. SEC., CHEIF, STAFF		0		–	–	–	9	20–1	20–1	10	–	–	–		0		EX. CYSTO RES. NURSE
EX. BASIC LAB LOBBY			0	–	–	–	11	20–1	20–1	12	–	–	–			0	EX. CAMERA CYSTO
EX. BASIC LAB	0			–	–	–	13	20–1	20–1	14	–	–	–	0			EX. IPU CYSTO
EX. BASIC TV		0		–	–	–	15	20–1	20–1	16	–	–	–		0		EX. IPU CYSTO
EX. LIGHTS 3C-03A,B			0	–	–	–	17	20–1	–	18	–	–	–			0	SPACE
SPACE	0			–	–	–	19	–	–	20	–	–	–	0			SPACE
SPACE		0		–	–	–	21	–	–	22	–	–	–		0		SPACE
SPACE			0	–	–	–	23	–	–	24	–	–	–			0	SPACE
SPACE	0			–	–	–	25	–	–	26	–	–	–	0			SPACE
SPACE		0		–	–	–	27	–	–	28	–	–	–		0		SPACE
SPACE			0	–	–	–	29	–	20–1	30	–	–	–			0	ELECTRICAL/MECHANICAL

φ A= 0 · φ B= 0 · φ C= 0
TOTAL CONNECTED LOAD: 0 VA OR 0 AMPS @ 208 VOLTS - 3 ø
LCL: 0 · RECEPTACLE LOAD: 0 · GENERAL LOAD: 0
FDL: 0

PANEL 3LLD (NEW)

208/120 VOLTS · 3 PHASE · 4 WIRE
PANEL: 3LLD (NEW) · LOCATION · KAIC · KSCA
NONE MAIN BREAKER · 225 AMP BUSSING · 100% NEUTRAL BUS · WITHOUT IG BUS

LOCATION	φA	φB	φC	LTG	REC	MIS	CIR	BKR	BKR	CIR	MIS	REC	LTG	φA	φB	φC	LOCATION
RM 3F-03 FRIDGE	850			–	–	–	1	20–1	20–1	2	–	–	–	720			RM 3F-28 RECEPTACLES
RM 3F-03 FRIDGE		850		–	–	–	3	20–1	20–1	4	–	–	–		360		RM 3F-28 RECEPTACLES
RM 3F-03 MICROWAVE			1200	–	–	–	5	20–1	20–1	6	–	–	–			720	RM 3F-26 RECEPTACLES
RM 3F-03 MICROWAVE	1200			–	–	–	7	20–1	20–1	8	–	–	–	360			RM 3F-26 RECEPTACLES
RM 3F-03 COFFEE		1200		–	–	–	9	20–1	20–1	10	–	–	–		720		RM 3F-04 RECEPTACLES
RM 3F-03 COUNTER RECEPTACLES			800	–	–	–	11	20–1	20–1	12	–	–	–			720	RM 3F-02 RECEPTACLES
RM 3F-03 DISPOSAL	700			–	–	–	13	20–1	20–1	14	–	–	–	720			RM 3F-02 RECEPTACLES
RM 3F-03 INSTA-HOT		2080		–	–	–	15	25A	20–1	16	–	–	–		720		RM 3F-04 RECEPTACLES
–			2080	–	–	–	17	2P	20–1	18	–	–	–			720	RM 3F-10 RECEPTACLES
RM 3F-22 RECEPTACLES	1350			–	–	–	19	20–1	20–1	20	–	–	–	720			RM 3F-02 RECEPTACLES
RM 3F-03 RECEPTACLES		810		–	–	–	21	20–1	20–1	22	–	–	–		1250		RM 3F-01 RECEPTACLES
RM 3F-03 RECEPTACLES			360	–	–	–	23	20–1	20–1	24	–	–	–			1070	RM 3F-02,04, CORR. RECEPTACLES
RM 3F-11 RECEPTACLES	540			–	–	–	25	20–1	20–1	26	–	–	–	800			RM 3F-02 RECEPTACLES
SPARE		0		–	–	–	27	20–1	20–1	28	–	–	–		710		RM 3F-02,02A RECEPTACLES
SPARE			0	–	–	–	29	20–1	20–1	30	–	–	–			360	RM 3F-02A RECEPTACLES
SPARE	0			–	–	–	31	20–1	20–1	32	–	–	–	400			DRINKING FOUNTAIN
SPARE		0		–	–	–	33	20–1	20–1	34	–	–	–		1080		SCRUB DISPENSERS
SPARE			0	–	–	–	35	20–1	20–1	36	–	–	–			0	SPARE
SPARE	0			–	–	–	37	20–1	20–1	38	–	–	–	0			SPARE
SPARE		0		–	–	–	39	20–1	15–1	40	–	–	–		600		AUTOMATIC DOOR
SPARE			0	–	–	–	41	20–1	15–1	42	–	–	–			600	AUTOMATIC DOOR

φ A= 8360 VA · φ B= 10380 VA · φ C= 8630 VA
TOTAL CONNECTED LOAD: 27370 VA OR 76.0 AMPS @ 208 VOLTS - 3 ø
LCL: 0 VA x 25% = 0 VA · RECEPTACLE LOAD: 0 x 180 = 0 VA · GENERAL LOAD: 27370 VA
FDL: 27370 VA OR 76.0 AMPS

PANEL IPUB (NEW) (2)

120 VOLTS · 1 PHASE · 2 WIRE
PANEL: IPUB (NEW) (2) · LOCATION · KAIC · KSCA
MAIN BREAKER · AMP BUSSING · NONE NEUTRAL BUS · IG BUS

LOCATION	VA L1	VA L2	LTG	REC	MIS	CIR	BKR	BKR	CIR	MIS	REC	LTG	VA L1	VA L2	LOCATION
WALL RECEPTACLE	90		–	–	–	1	20A	20A	2	–	–	–	90		CEILING RECEPTACLE
–		90	–	–	–		2P	2P		–	–	–		90	–
WALL RECEPTACLE	90		–	–	–	3	20A	20A	4	–	–	–	225		BOOM MONITORS
–		90	–	–	–		2P	2P		–	–	–		225	–
WALL RECEPTACLE	90		–	–	–	5	20A	20A	6	–	–	–	25		CLOCKS
–		90	–	–	–		2P	2P		–	–	–		25	–
WALL RECEPTACLE	90		–	–	–	7	20A	20A	8	–	–	–	0		SPARE
–		90	–	–	–		2P	2P		–	–	–		0	–
WALL RECEPTACLE	90		–	–	–	9	20A	20A	10	–	–	–	0		SPARE
–		90	–	–	–		2P	2P		–	–	–		0	–
WALL RECEPTACLE	90		–	–	–	11	20A	20A	12	–	–	–	0		SPARE
–		90	–	–	–		2P	2P		–	–	–		0	–
WALL RECEPTACLE	90		–	–	–	13	20A	20A	14	–	–	–	0		SPARE
–		90	–	–	–		2P	2P		–	–	–		0	–
WALL RECEPTACLE	90		–	–	–	15	20A	20A	16	–	–	–	0		SPARE
–		90	–	–	–		2P	2P		–	–	–		0	–

φ A= 1060 VA · φ B= 1060 VA
TOTAL CONNECTED LOAD: 2120 VA OR 17.7 AMPS @ 120 VOLTS - 1 ø
LCL: 0 VA x 25% = 0 VA · RECEPTACLE LOAD: 0 x 180 = 0 VA · GENERAL LOAD: 2120 VA
FDL: 2120 VA OR 17.7 AMPS

PANEL 2CL3 (EXISTING)

208/120 VOLTS · 3 PHASE · 4 WIRE
PANEL: 2CL3 (EXISTING) · LOCATION · KAIC · KSCA
70A, 3P MAIN BREAKER · 70 AMP BUSSING · 100% NEUTRAL BUS · WITHOUT IG BUS

LOCATION	φA	φB	φC	LTG	REC	MIS	CIR	BKR	BKR	CIR	MIS	REC	LTG	φA	φB	φC	LOCATION
EX. HG DUPLEX RECEPT.	500			–	–	–	1	20–1	20–1	2	–	–	–	500			EX. HG DUPLEX RECEPT.
EX. HG DUPLEX RECEPT.		500		–	–	–	3	20–1	20–1	4	–	–	–		500		EX. HG DUPLEX RECEPT.
EX. HG DUPLEX RECEPT.			500	–	–	–	5	20–1	20–1	6	–	–	–			500	EX. HG DUPLEX RECEPT.
EX. HG DUPLEX RECEPT.	500			–	–	–	7	20–1	20–1	8	–	–	–	500			EX. PBPU – RECOVERY ROOM
EX. HG DUPLEX RECEPT.		500		–	–	–	9	20–1	20–1	10	–	–	–		500		EX. PBPU – RECOVERY ROOM
EX. HG DUPLEX RECEPT.			500	–	–	–	11	20–1	20–1	12	–	–	–			500	EX. PBPU – RECOVERY ROOM
EX. SB03-4 HG DUPLEX RECEPT.	500			–	–	–	13	20–1	20–1	14	–	–	–	500			EX. HG DUPLEX RECEPT.
EX. SB03-4 HG DED. DUPLEX RECEPT.		500		–	–	–	15	20–1	20–1	16	–	–	–		500		EX. HG DUPLEX RECEPT.
EX. SB03-4 HG DED. DUPLEX RECEPT.			500	–	–	–	17	20–1	20–1	18	–	–	–			500	EX. HG DUPLEX RECEPT.
EX. RECEPT. IN EQUIP BAY	500			–	–	–	19	20–1	20–1	20	–	–	–	0			SPARE
EX. RECEPT. IN EQUIP RM		500		–	–	–	21	20–1	20–1	22	–	–	–		1680		OR#8 WARMING CABINET
EX. RECEPT. IN EQUIP RM			500	–	–	–	23	20–1	20–1	24	–	–	–			500	OR#8 COMPUTER
CV-1, CV-2, CV-3	450			–	–	–	25	20–1	20–1	26	–	–	–	500			OR#8 55" MONITOR
MGA-1		50		–	–	–	27	20–1	20–1	28	–	–	–		1380		PHARMACY FRIDGE
OR#8 ROUTER			1650	–	–	–	29	20–1	20–1	30	–	–	–			720	MED DIST. SYSTEM
OR#8 TOUCH PANEL	240			–	–	–	31	20–1	20–1	32	–	–	–	600			U/C PHARMACY FRIDGE
OR#8 DIGITAL CAPTURE DEVICE		480		–	–	–	33	20–1	–	34	–	–	–		0		SPACE
OR#8 TELETOM BRAKE			300	–	–	–	35	20–1	–	36	–	–	–			0	SPACE
OR#8 TELETOM MOTOR	450			–	–	–	37	20–1	–	38	–	–	–	0			SPACE
SPACE		0		–	–	–	39	–	–	40	–	–	–		0		SPACE
SPACE			0	–	–	–	41	–	–	42	–	–	–			0	SPACE

(1) (left, circuits 25–37) · (1) (right, circuits 22–32) · NEW WORK TYP.

φ A= 5740 VA · φ B= 7090 VA · φ C= 6670 VA
TOTAL CONNECTED LOAD: 19500 VA OR 54.2 AMPS @ 208 VOLTS - 3 ø
LCL: 0 VA x 25% = 0 VA · RECEPTACLE LOAD: 0 x 180 = 0 VA · GENERAL LOAD: 19500 VA
FDL: 19500 VA OR 54.2 AMPS

PANEL 4CL3 (EXISTING)

480/277 VOLTS · 3 PHASE · 4 WIRE
PANEL: 4CL3 (EXISTING) · LOCATION · KAIC · KSCA
70A, 3P MAIN BREAKER · 70 AMP BUSSING · 100% NEUTRAL BUS · WITHOUT IG BUS

LOCATION	φA	φB	φC	LTG	REC	MIS	CIR	BKR	BKR	CIR	MIS	REC	LTG	φA	φB	φC	LOCATION
EX. EM CRITICAL LTS	1500			–	–	–	1	20–1	20–1	2	–	–	–	1500			EX. EM CRITICAL LTS
EX. EM CRITICAL LTS		1500		–	–	–	3	20–1	20–1	4	–	–	–		1500		EX. EM CRITICAL LTS
EX. EM CRITICAL LTS			1500	–	–	–	5	20–1	20–1	6	–	–	–			0	SPARE
EX. EM CRITICAL LTS	1500			–	–	–	7	20–1	20–1	8	–	–	–	2000			EX. 1PC-B2 O.R. ISO. XMFR PNL
SPARE		0		–	–	–	9	20–1	20–1	10	–	–	–		2000		EX. 1PC-B3 O.R. ISO. XMFR PNL
SPARE			0	–	–	–	11	20–1	20–1	12	–	–	–			2000	EX. 1PC-B4 O.R. ISO. XMFR PNL
EX. 1PC-A1 O.R. ISO. XMFR PNL	2000			–	–	–	13	20–1	20–1	14	–	–	–	2000			EX. 1PC-B5 O.R. ISO. XMFR PNL
EX. 1PC-A2 O.R. ISO. XMFR PNL		2000		–	–	–	15	20–1	20–1	16	–	–	–		2000		EX. 1PC-C1 O.R. ISO. XMFR PNL
EX. 1PC-A3 O.R. ISO. XMFR PNL			2000	–	–	–	17	20–1	20–1	18	–	–	–			984	OR#8 LIGHTS (1)
EX. 1PC-A4 O.R. ISO. XMFR PNL	2000			–	–	–	19	20–1	–	20	–	–	–	0			SPACE
EX. 1PC-A5 O.R. ISO. XMFR PNL		2000		–	–	–	21	20–1	–	22	–	–	–		0		SPACE
EX. 1PC-B1 O.R. ISO. XMFR PNL			2000	–	–	–	23	20–1	–	24	–	–	–			0	SPACE
OR#8 IPUA	3570			–	–	–	25	35–1	–	26	–	–	–	0			SPACE
OR#8 IPUB		2120		–	–	–	27	45–1	–	28	–	–	–		0		SPACE
LTG INV A			3600	–	–	–	29	30–1	–	30	–	–	–			0	SPACE
SPACE	0			–	–	–	31	–	–	32	–	–	–	0			SPACE
SPACE		0		–	–	–	33	–	–	34	–	–	–		0		SPACE
SPACE			0	–	–	–	35	–	–	36	–	–	–			0	SPACE
SPACE	0			–	–	–	37	–	–	38	–	–	–	0			SPACE
SPACE		0		–	–	–	39	–	–	40	–	–	–		0		SPACE
SPACE			0	–	–	–	41	–	20–1	42	–	–	–			0	SPARE

(1) (left, circuits 25–29)

φ A= 16070 VA · φ B= 13120 VA · φ C= 12084 VA
TOTAL CONNECTED LOAD: 41274 VA OR 49.7 AMPS @ 480 VOLTS - 3 ø
LCL: 0 VA x 25% = 0 VA · RECEPTACLE LOAD: 0 x 180 = 0 VA · GENERAL LOAD: 41274 VA
FDL: 41274 VA OR 49.7 AMPS

PANEL 2EL3 (EXISTING)

208/120 VOLTS · 3 PHASE · 4 WIRE
PANEL: 2EL3 (EXISTING) · LOCATION · KAIC · KSCA
70A, 3P MAIN BREAKER · 70 AMP BUSSING · 100% NEUTRAL BUS · WITHOUT IG BUS

LOCATION	φA	φB	φC	LTG	REC	MIS	CIR	BKR	BKR	CIR	MIS	REC	LTG	φA	φB	φC	LOCATION
EX. FACP – EQUIP RM SB03-4	0			–	–	–	1	20–1	50A	2	–	–	–	0			SPARE
EX. COMM – EQUIP RM SB03-4		0		–	–	–	3	20–1	2P	4	–	–	–		0		–
EX. SECURITY – EQUIP RM SB03-4			0	–	–	–	5	20–1	20–1	6	–	–	–			0	SPARE
CFSD	50			–	–	–	7	20–1	20–1	8	–	–	–	0			SPARE
SPARE		0		–	–	–	9	20–1	20–1	10	–	–	–		0		SPARE
SPARE			0	–	–	–	11	20–1	20–1	12	–	–	–			0	SPARE
SPARE	0			–	–	–	13	20–1	20–1	14	–	–	–	0			SPARE
SPARE		0		–	–	–	15	20–1	20–1	16	–	–	–		0		SPARE
SPARE			0	–	–	–	17	20–1	30A	18	–	–	–			0	SPARE
SPARE	0			–	–	–	19	20–1	2P	20	–	–	–	0			–
SPARE		0		–	–	–	21	20–1	20–1	22	–	–	–		0		SPARE
SPARE			0	–	–	–	23	20–1	20–1	24	–	–	–			0	SPARE
SPARE	0			–	–	–	25	20–1	20–1	26	–	–	–	0			SPARE
SPARE		0		–	–	–	27	20A	20–1	28	–	–	–		0		SPARE
–			0	–	–	–	29	2P	20–1	30	–	–	–			0	SPARE
SPARE	0			–	–	–	31	20A	20–1	32	–	–	–	0			SPARE
–		0		–	–	–	33	2P	20–1	34	–	–	–		0		SPARE
SPARE			0	–	–	–	35	20A	20–1	36	–	–	–			0	SPARE
–	0			–	–	–	37	2P	20–1	38	–	–	–	0			SPARE
SPARE		0		–	–	–	39	20A	20–1	40	–	–	–		0		SPARE
–			0	–	–	–	41	2P	20–1	42	–	–	–			0	SPARE

φ A= 0 · φ B= 0 · φ C= 0
TOTAL CONNECTED LOAD: 0 VA OR 0 AMPS @ 208 VOLTS - 3 ø
LCL: 0 · RECEPTACLE LOAD: 0 · GENERAL LOAD: 0
FDL: 0

NOTES:

1. PROVIDE AND INSTALL NEW BREAKER, TYPE TO MATCH EXISTING.
2. DUAL VOLTAGE ISOLATED POWER PANEL. THIS SCHEDULE IS FOR THE 120V SECTION ONLY.

PANEL SCHEDULES · NONE · F1

LUMINAIRE SCHEDULE

TYPE	DESCRIPTION	LAMP	REMARKS
A / 123	RECESSED 2X4 WITH ONE PIECE SEAM WELDED HOLE-FREE 20-GAUGE WHITE STAINLESS STEEL HOUSING, DIE FORM WHITE POWDER COATED STEEL MINIMUM 92% REFLECTIVITY REFLECTOR, 20-GAUGE ONE PIECE INSERT SEAM WELDED WHITE STAINLESS STEEL DOOR FRAME WITH (2) STAINLESS STEEL HINGE CABLES, CAPTIVE STAINLESS STEEL FASTENERS AND CLOSED CELL KLEAN-LOCK SEALPRO NSF LISTED EXTRUDED GASKETING, ONE PIECE MICRO-LINEAR PRISMATIC RFI SHIELDED LENS SEALED BY CLEAN ROOM GRADE SILICONE GASKET, HIGH EFFICIENCY LED DRIVERS, WET LOCATION LISTED AND (5) YEAR WARRANTY. KURTZON # ML-3-2X4-3/LEDR-50-UNV-1/CIR-WHT OR APPROVED EQUAL.	LED 11000 LUMENS 90CRI	LAMP COLOR TEMPERATURE TO MATCH THE SURGICAL LIGHTS.
B1 / 41	RECESSED 2X4 WITH HINGED & LATCHED FROM EITHER SIDE EXTRUDED ACRYLIC LENSES, INTEGRAL FIXED OUTPUT DRIVER, LM-79 & LM-80 TESTED, IC RATED, DAMP LOCATION LISTED AND FIVE YEAR WARRANTY. COLUMBIA # LSER-24-40-LW-C-EU OR APPROVED EQUAL.	LED 4200 LUMENS 3500K 80CRI	
B2 / 62	RECESSED 2X4 WITH HINGED & LATCHED FROM EITHER SIDE EXTRUDED ACRYLIC LENSES, INTEGRAL 0-10V DIMMING TO 1% DRIVER, LM-79 & LM-80 TESTED, IC RATED, DAMP LOCATION LISTED AND FIVE YEAR WARRANTY. COLUMBIA # LSER-24-40-HL-C-ED1U OR APPROVED EQUAL.	LED 6175 LUMENS 3500K 80CRI	
B3 / 82	RECESSED 2X4 WITH HINGED & LATCHED FROM EITHER SIDE EXTRUDED ACRYLIC LENSES, INTEGRAL FIXED OUTPUT DRIVER, LM-79 & LM-80 TESTED, IC RATED, DAMP LOCATION LISTED AND FIVE YEAR WARRANTY. COLUMBIA # LSER-24-40-VL-C-EU OR APPROVED EQUAL.	LED 7950 LUMENS 3500K 80CRI	
C / 26	RECESSED 4" OPEN DOWNLIGHT WITH ALUMINUM CLEAR ALZAK SEMI-DIFFUSE REFLECTOR, WISP LENS, INTEGRAL LED MODULE & 0-10V DIMMING DRIVER, WET LOCATION LISTED AND FIVE YEAR WARRANTY. PRESCOLITE # LF4LEDG4-4LFLED7G440K OR APPROVED EQUAL.	LED 2000 LUMENS 3500K 80CRI	
D1 / 33	RECESSED 2X4 WITH HINGED & LATCHED FROM EITHER SIDE EXTRUDED PATTERN 12 FROSTED ACRYLIC LENSES, INTEGRAL FIXED OUTPUT DRIVER, LM-79 & LM-80 TESTED, IC RATED, AND FIVE YEAR WARRANTY. COLUMBIA # LLT24-40LW-FAA12F-EU OR APPROVED EQUAL.	LED 4300 LUMENS 3500K 82CRI	
D2 / 45	RECESSED 2X4 WITH HINGED & LATCHED FROM EITHER SIDE EXTRUDED PATTERN 12 FROSTED ACRYLIC LENSES, INTEGRAL FIXED OUTPUT DIMMING DRIVER, LM-79 & LM-80 TESTED, IC RATED, AND FIVE YEAR WARRANTY. COLUMBIA # LLT24-40HL-FAA12F-EU OR APPROVED EQUAL.	LED 5600 LUMENS 3500K 82CRI	
D3 / 75	RECESSED 2X4 WITH HINGED & LATCHED FROM EITHER SIDE EXTRUDED PATTERN 12 FROSTED ACRYLIC LENSES, INTEGRAL FIXED OUTPUT DIMMING DRIVER, LM-79 & LM-80 TESTED, IC RATED, AND FIVE YEAR WARRANTY. COLUMBIA # LLT24-40XL-FAA12F-EU OR APPROVED EQUAL.	LED 8700 LUMENS 3500K 82CRI	
E / 40	WALL MOUNTED 4' WITH 60% RECYCLED ALUMINUM EXTRUDED HOUSING, FLUSH FASCIA, LOWER APERTURE ONLY, HTLO LENS, INTEGRAL DRIVER, LM-79 AND LM-80 TESTED AND FIVE YEAR WARRANTY. ELEMENTS # AXL-E4-R-1D-LH-40-H-U-FL OR APPROVED EQUAL.	LED 4800 LUMENS 3500K	
F / 230	RECESSED 2X4 ONE-PIECE SEAM WELDED ALUMINUM HOUSING WITH 0.135 THICK P12 PRISMATIC ACRYLIC LENS IN ALUMINUM DOOR HINGED WITH STAINLESS STEEL CABLES & SECURED WITH STAINLESS STEEL SCREWS, PURE NEOPRENE GASKETS BETWEEN LENS & DOOR, DOOR TO HOUSING AND HOUSING TO CEILING STRUCTURE, INTEGRAL DRIVER, WET LOCATION LISTED AND FIVE YEAR WARRANTY. KURTZON WL-5-2X4-3/LEDH35-UNV OR APPROVED EQUAL	LED 19870 LUMENS 3500K 80CRI	
⊗	DIE-CAST WHITE ALUMINUM HOUSING WITH RED PANEL COLOR, 90-MINUTE CAPACITY MAINTENANCE-FREE NICKEL-CADMIUM BATTERY, BATTERY CHARGER, INTEGRAL SELF-TEST, UNIVERSAL MOUNTING, SINGLE OR DOUBLE FACED, WITH OR WITHOUT ARROW(S) AS SHOWN ON PLAN.	LED	

LIGHTING FIXTURE SCHEDULE · NONE · D8

- · NTS · E8 — - · NTS · E9

- · NTS · F8 — - · NTS · F9

CONSTRUCTION DOCUMENTS
FULLY SPRINKLERED

No.	Description	Date
1	SCHEMATIC DESIGN (SD)	10/20/2015
2	DESIGN DEVELOPMENT (DD)	01/18/2016
3	CONSTRUCTION DOCUMENTS (CD)	03/30/2016

CONSULTANTS:
(SEE PROJECT TEAM DIRECTORY ON GI000 COVER SHEET)

KOCHER SCHIRRA GOHARIZI Consulting Engineers, Inc.
111 N. JACKSON SUITE 121 GLENDALE CA 91206-4371
PHONE: 818.240.5630 FAX: 818.240.5144

Seals and Signatures
REGISTERED PROFESSIONAL ENGINEER · RAZMIK MATHEVOSIAN · No. E-17015 · 9/30/2017 · ELECTRICAL · STATE OF CALIFORNIA

ARCHITECTS/ENGINEERS:
LEO A DALY
PLANNING ARCHITECTURE ENGINEERING INTERIORS
550 South Hope Street, 27th Floor
Los Angeles, California 90071, USA
213-629-0100 F213-629-0070
EST. 1915

Drawing Title: PANEL AND LUMINAIRE SCHEDULES
Approved: Project Director
Project Title: CONSTRUCT OPERATING ROOM #8
Location: 11201 BENTON STREET, LOMA LINDA, CA 92357
Date: 03/30/2016 · Checked: TC · Drawn: JR
Project Number: 605-14-640
Building Number: 1
Drawing Number: E301
Office of Construction and Facilities Management
Department of Veterans Affairs

VA FORM 08-6231

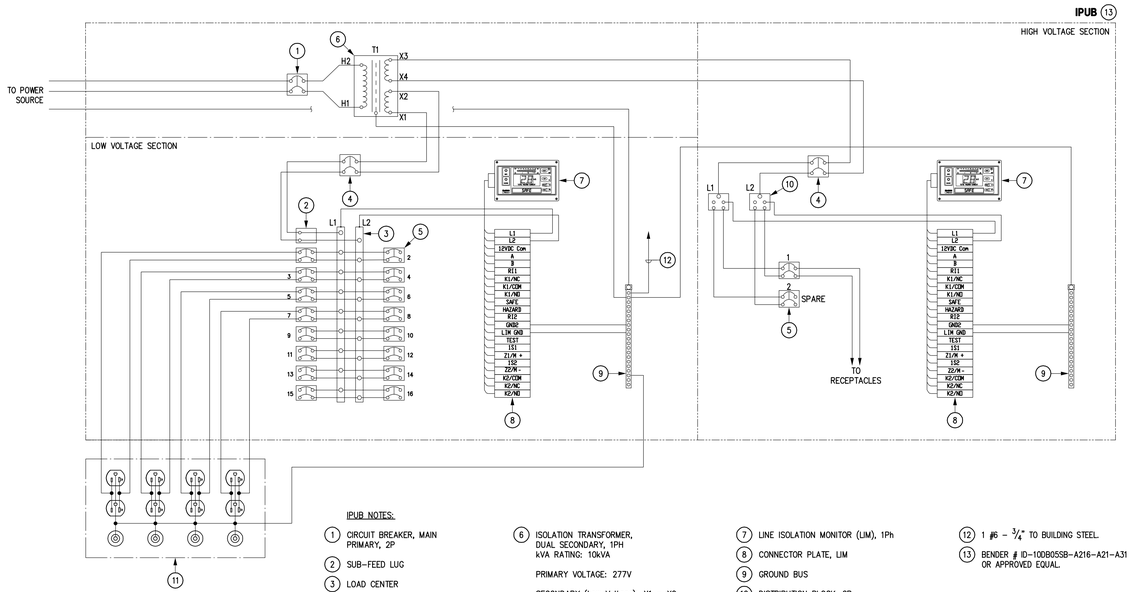

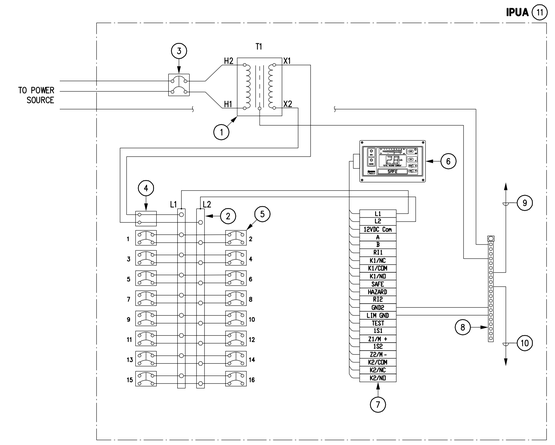

GENERAL NOTES:

1. TYPE XHHW WIRE WITH A DIELECTRIC CONSTANT OF LESS THAN 3.5 IS REQUIRED FOR ALL BRANCH CIRCUIT FIELD WIRING.
2. POLARITY SHALL BE OBSERVED IN ALL INSTANCES.
3. DO NOT OVERLAY OR CROSS LOW VOLTAGE SECTION AND HIGH VOLTAGE SECTION BRANCH WIRING.

IPUB NOTES:

1. CIRCUIT BREAKER, MAIN PRIMARY, 2P
2. SUB-FEED LUG
3. LOAD CENTER
4. CIRCUIT BREAKER, MAIN SECONDARY, 2P
5. CIRCUIT BREAKER, BRANCH, 2P (Low Voltage Section) # 16 – 20A (High Voltage Section) # 1 – 20A # 1 – 30A
6. ISOLATION TRANSFORMER, DUAL SECONDARY, 1PH kVA RATING: 10kVA PRIMARY VOLTAGE: 277V SECONDARY (Low Voltage): X1 – X2 5kVA, 120V SECONDARY (High Voltage): X3 – X4 5kVA, 208V FREQUENCY: 60HZ
7. LINE ISOLATION MONITOR (LIM), 1Ph
8. CONNECTOR PLATE, LIM
9. GROUND BUS
10. DISTRIBUTION BLOCK, 2P
11. GROUND AND POWER MODULE. SEE PLAN FOR QUANTITY OF MODULE. EQUIPMENT GROUND WIRES WITH BRANCH CIRCUIT WIRING ARE NOT SHOWN FOR CLARITY.
12. 1 #6 – 3/4" TO BUILDING STEEL.
13. BENDER # ID-10DB05SB-A216-A21-A31 OR APPROVED EQUAL.

IPUA NOTES:

1. ISOLATION TRANSFORMER, 1Ph. KVA RATING: 7.5KVA PRIMARY VOLTAGE: 277V SECONDARY VOLTAGE 120V FREQUENCY: 60HZ
2. LOAD CENTER
3. CIRCUIT BREAKER, MAIN, 2P
4. SUB-FEED LUG
5. CIRCUIT BREAKER, BRANCH, 2P # 16 – 20A
6. LINE ISOLATION MONITOR, 1Ph
7. CONNECTOR PLATE, LIM
8. GROUND BUS
9. 1 #6 – 3/4" TO BUILDING STEEL.
10. 1 #6 – 3/4" TO PANEL 1PUB BENDER # IP-07DASB-A216 OR APPROVED EQUAL.

ISOLATED POWER PANELS | NTS | C1

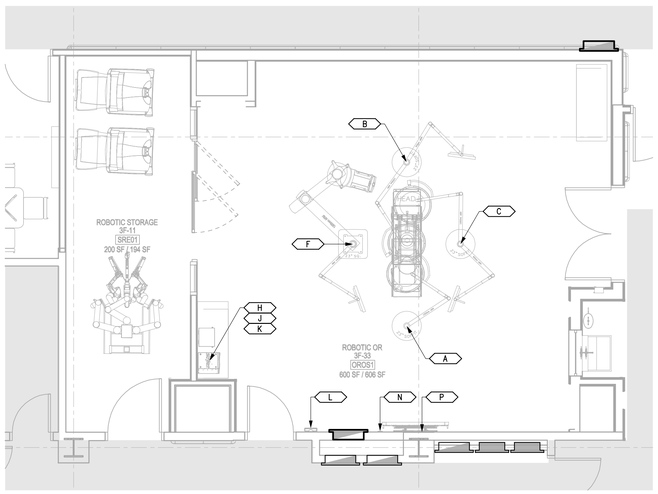

PRE-INSTALL NOTES SCHEDULE

ITEM	NAME
A	CHROMOPHARE SURGICAL LIGHT CONDUIT: TERMINATE ALL CONDUITS WITHIN 18" OF THE CENTER OF THE CEILING MOUNT. LIGHT POWER: REFER TO SK ENCLOSURE (ITEM K) NOTE FOR POWER.
B, C	CHROMOPHARE SURGICAL LIGHT / SINGLE FLAT PANEL (SFP) CHROMOPHARE SURGICAL LIGHT / SINGLE FLAT PANEL (SFP) CONDUIT: TERMINATE ALL CONDUITS WITHIN 18" OF THE CENTER OF THE CEILING MOUNT. MONITOR POWER: ONE (1) – 20 AMP CIRCUIT LOCATED AT JUNCTION BOX WITHIN 18" OF CENTER OF STRYKER PRE-INSTALL PLATE. – THE CONTRACTOR IS TO HARDWIRE STRYKER ELECTRICAL WHIPS DURING STRYKER INSTALLATION. INSTALL 5 AMP FUSES FOR 100V– 120V APPLICATIONS. LIGHT POWER: ORIGINATE FROM SK ENCLOSURE (ITEM K).
F	TC MOUNT: TELETOM TP-622-C EQUIPMENT BOOM / SINGLE FLAT PANEL (SFP) CONDUIT: TERMINATE ALL CONDUITS WITHIN 18" OF THE CENTER OF THE CEILING MOUNT. – ALL BOOM ELECTRICAL CIRCUITS SHALL BE CONNECTED TO TELETOM OUTLET BOX. – THE CONTRACTOR IS TO HARDWIRE STRYKER ELECTRICAL WHIP DURING STRYKER INSTALLATION. MONITOR POWER: ONE (1) – 20 AMP CIRCUIT LOCATED AT JUNCTION BOX WITHIN 18" OF CENTER OF STRYKER PRE-INSTALL PLATE. – THE CONTRACTOR IS TO HARDWIRE STRYKER ELECTRICAL WHIPS DURING STRYKER INSTALLATION. INSTALL 5 AMP FUSES FOR 120V APPLICATIONS.
H	CUSTOMER DOC STATION POWER: – ONE (1) CIRCUIT FOR QUAD OUTLET BEHIND SPI3 ROUTER. – ONE (1) CIRCUIT FOR DUPLEX OUTLET UNDER TOUCH PANEL. – ONE (1) CIRCUIT FOR QUAD OUTLET BEHIND DIGITAL CAPTURE DEVICE.
J	SWITCHPOINT INFINITY 3 DIMENSIONS: – MEDIA ROUTER: 20.6"W X 24"H X 17"D – CONTROL SECTION: 12.5"W X 2.6"H X 17"D – TOTAL SPACE REQUIRED: 27.5"W X 31"H X 29"D BACKBOX: ONE (1) RECESSED 18"W X 18"H X 4"D (MINIMUM) SCREW COVER JUNCTION BOX, BOTTOM AT 9" ABOVE FINISHED FLOOR.
K	CHROMOPHARE SK ENCLOSURE CONDUIT: MAXIMUM LENGTH OF 45 FEET OF CONDUIT RUN TO BOTH THE MOUNTING PLATE AND THE WALL CONTROL PANEL (ITEM L). POWER: – AC WIRING: TERMINATED TO THE FUSED TERMINAL BLOCK INSIDE THE SK ENCLOSURE.
L	CHROMOPHARE WALL CONTROL PANEL. BACK BOX: ONE (1) STANDARD 4X4 JUNCTION BOX, AT +53".
N	TRIPLE WALL PLATE (VGA/S-VIDEO/BNC) BACK BOX: ONE (1) 4"W X 4"H JUNCTION BOX WITH SINGLE-GANG MUD RING – MOUNT THE J-BOX 18" ABOVE FINISHED FLOOR.
P	55" LCD MONITOR BACK BOX: ONE (1) 4"W X 4"H JUNCTION BOX WITH SINGLE-GANG MUD RING MOUNTED DIRECTLY ABOVE THE TOP OF THE MOUNTING BRACKET.

NOTES:

1. ALL ITEMS UNDER THE EQUIPMENT SCHEDULE OF DETAIL F1 ARE PROVIDED BY THE OWNER.
2. PROVIDE AND INSTALL ALL CONDUITS UNDER THE CONDUIT SCHEDULE OF DETAIL F1.
3. ALL CONDUIT RUNS INCLUDE INSULATED BUSHINGS AND PULL STRINGS.
4. CONDUIT RUNS CANNOT EXCEED 50' FROM END-TO-END. DO NOT EXCEED FOUR (4) 90 DEGREE BENDS.
5. PROVIDE AND INSTALL ALL BOXES CALLED OUT UNDER THE PRE-INSTALL NOTES SCHEDULE.
6. AFTER THE PRE-INSTALLATION WORK AS INDICATED UNDER THE PRE-INSTALL NOTES SCHEDULE ON DETAIL F1, MAKE ALL FINAL CONDUIT AND WIRE CONNECTIONS AS REQUIRED WHEN ALL STRYKER MEDICAL EQUIPMENT IS IN PLACE.

EQUIPMENT SCHEDULE

ITEM	NAME	QTY
A	CHROMOPHARE F628 SURGICAL LIGHT (1000)	1
B	CHROMOPHARE F628 SURGICAL LIGHT (1000) / SINGLE FLAT PANEL (900)	1
C	CHROMOPHARE F628 SURGICAL LIGHT (1000) / SINGLE FLAT PANEL (900)	1
F	TELETOM TC TP-622-C EQUIPMENT BOOM (1300) / SINGLE FLAT PANEL (900)	1
H	CUSTOMER DOC STATION	1
J	SWITCHPOINT INFINITY 3	1
K	CHROMOPHARE SK ENCLOSURE	1
L	CHROMOPHARE WALL CONTROL PANEL	1
N	WALL PLATE | VGA/S-VIDEO/BNC	1
P	55" LCD MONITOR	1

CONDUIT SCHEDULE

CONDUIT RUN ITEM - ITEM	CONDUIT QTY	CONDUIT SIZE
A – K	2	1"
A – B	1	1"
B – J	1	1 1/2"
B – K	2	1"
B – C	1	1"
C – J	1	1 1/2"
C – K	2	1"
F – J	1	1 1/2"
F – J	2	2"
L – K	1	1"
N – J	1	1"
P – J	1	1 1/2"

STRYKER MEDICAL EQUIPMENT INSTALLATION PLAN AND SCHEDULE | NTS | F1

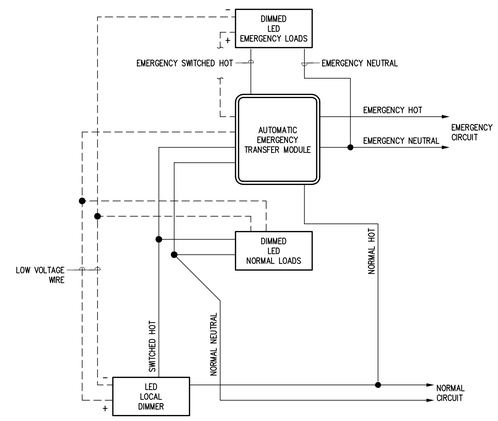

MANUFACTURER:
LVS # EPC-1-D
OR APPROVED EQUAL

DIMMED 0-10V LED LUMINAIRE EMERGENCY BYPASS RELAY | NTS | F8

CONSTRUCTION DOCUMENTS
FULLY SPRINKLERED

No.	Description	Date
1	SCHEMATIC DESIGN (SD)	10/20/2015
2	DESIGN DEVELOPMENT (DD)	01/18/2016
3	CONSTRUCTION DOCUMENTS (CD)	03/30/2016

CONSULTANTS:

(SEE PROJECT TEAM DIRECTORY ON GI000 COVER SHEET)

KOCHER SCHIRRA GOHARIZI
Consulting Engineers, Inc.
111 N JACKSON SUITE 121 GLENDALE CA 91206-4371
PHONE: 818.240.5630 FAX: 818.240.5144

Seals and Signatures

REGISTERED PROFESSIONAL ENGINEER
VAZGAYK MATHEVOSIAN
No. E-17015
9/30/2017
ELECTRICAL
STATE OF CALIFORNIA

ARCHITECTS/ENGINEERS:

LEO A DALY
550 South Hope Street, 27 thFloor
Los Angeles, California 90071, USA
213-629-0100 F213-629-0070
PLANNING
ARCHITECTURE
ENGINEERING
INTERIORS
EST. 1915

Drawing Title
SCHEDULES AND DIAGRAMS

Approved: Project Director

Project Title
CONSTRUCT OPERATING ROOM #8

Project Number
605-14-640

Building Number
1

Location
11201 BENTON STREET
LOMA LINDA, CA 92357

Drawing Number
E401

Date	Checked	Drawn
03/30/2016	TC	JR

Office of Construction and Facilities Management
Department of Veterans Affairs

VA FORM 08-6231

APPLICABLE CODES

1. THE CONSTRUCTION OF THIS PROJECT SHALL CONFORM TO THE REQUIREMENTS OF:
   - VA DIRECTIVES, DESIGN MANUAL, MASTER SPECIFICATIONS, VA NATIONAL CAD STANDARD APPLICATION GUIDE, AND OTHER GUIDANCE ON THE TECHNICAL INFORMATION LIBRARY (TIL)
   - INTERNATIONAL BUILDING CODE (IBC)
   - NFPA 101 LIFE SAFETY CODE
   - NFPA NATIONAL FIRE CODE WITH EXCEPTION OF NFPA 5000 AND NFPA 900
   - OCCUPATIONAL, SAFETY AND HEALTH ADMINISTRATION (OSHA) STANDARDS
   - VA SEISMIC DESIGN REQUIREMENTS, H-18-8
   - NATIONAL ELECTRICAL CODE (NEC)
   - SAFETY CODE FOR ELEVATORS AND ESCALATORS, AMERICAN SOCIETY OF MECHANICAL ENGINEERS (ASME) A 17.1
   - UNIFORM FEDERAL ACCESSIBILITY STANDARDS (UFAS) INCLUDING VA SUPPLEMENT, BARRIER FREE DESIGN
   - FEDERAL LEADERSHIP IN HIGH PERFORMANCE AND SUSTAINABLE BUILDINGS: MEMORANDUM OF UNDERSTANDING (MOU)
   - THE PROVISIONS FOR CONSTRUCTION AND SAFETY SIGNS. STATED IN THE GENERAL REQUIREMENTS SECTION 01 00 00 OF THE VA MASTER CONSTRUCTION SPECIFICATION
   - VA CODE SECTION 28.05.13 PART 2.1C. FOR ANY CABLE TRAY INSTALLATION.

PHASING NOTES

1. LOW VOLTAGE CONTRACTOR TO NOTE THAT THE VALL OPERATING ROOM #8 RELOCATION PROJECT WILL BE PHASED. REFER TO ARCHITECTURAL SHEETS G008 & G008A FOR ADDITIONAL INFORMATION.
2. LOW VOLTAGE CONTRACTOR TO ENSURE THAT ADEQUATE TIME INCLUDING MOVE INS AND MOVE OUTS ARE INCLUDED IN THEIR PROPOSAL TO ACCOMMODATE THIS PHASING PLAN.

GENERAL NOTES

1. ALL ELECTRICAL MATERIALS AND EQUIPMENT SHALL BE NEW AND SHALL BE LISTED BY UNDERWRITER'S LABORATORIES (UL) AND BEAR THEIR LABEL, OR LISTED AND CERTIFIED BY A NATIONALLY RECOGNIZED TESTING AUTHORITY WHERE UL DOES NOT HAVE A LISTING. CUSTOM MADE EQUIPMENT SHALL HAVE COMPLETE TEST DATA SUBMITTED BY THE MANUFACTURER ATTESTING TO ITS SAFETY. IN ADDITION, THE MATERIALS, EQUIPMENT, AND INSTALLATION SHALL COMPLY WITH THE REQUIREMENTS OF THE FOLLOWING:
   - AMERICAN SOCIETY OF TESTING MATERIALS (ASTM)
   INSULATED POWER CABLE ENGINEERS ASSOCIATION (IPCEA)
   NATIONAL ELECTRICAL MANUFACTURERS ASSOCIATION (NEMA)
   AMERICAN STANDARD ASSOCIATION (ASA)
   NATIONAL FIRE PROTECTION AGENCY (NFPA)
   AMERICAN NATIONAL STANDARD INSTITUTE (ANSI)
   CALIFORNIA ELECTRICAL CODE (CEC) - LATEST EDITION
   CALIFORNIA CODE OF REGULATIONS TITLE 24 (CCR)
   INSTITUTE OF ELECTRICAL AND ELECTRONIC ENGINEERS (IEEE)
   ALL LOCAL CODES HAVING JURISDICTION.
2. WHERE THE CODES HAVE DIFFERENT LEVELS OF REQUIREMENTS, THE MOST STRINGENT RULE SHALL APPLY.
3. THE CONTRACTOR SHALL VISIT THE SITE INCLUDING ALL AREAS INDICATED ON THE DRAWINGS. HE SHALL THOROUGHLY FAMILIARIZE HIMSELF WITH THE EXISTING CONDITIONS AND BY SUBMITTING A BID, ACCEPTS THE CONDITIONS UNDER WHICH HE SHALL BE REQUIRED TO PERFORM HIS WORK.
4. IT SHALL BE THE CONTRACTOR'S RESPONSIBILITY TO OBTAIN COMPLETE SET OF CONTRACT DOCUMENTS, ADDENDA, DRAWINGS AND SPECIFICATIONS. HE SHALL CHECK THE DRAWINGS OF THE OTHER TRADES AND SHALL CAREFULLY READ THE ENTIRE SPECIFICATIONS AND DETERMINE HIS RESPONSIBILITIES. FAILURE TO DO SO SHALL NOT RELEASE THE CONTRACTOR FROM DOING THE WORK IN COMPLETE ACCORDANCE WITH THE DRAWINGS AND SPECIFICATIONS.
5. THE CONTRACTOR SHALL COORDINATE HIS WORK WITH OTHER TRADES AT THE SITE. ANY COSTS TO INSTALL WORK TO ACCOMPLISH SAID COORDINATION WHICH DIFFERS FROM THE WORK AS SHOWN ON THE DRAWINGS SHALL BE INCURRED BY THE CONTRACTOR.
6. SHOP DRAWINGS SHALL BE SUBMITTED WITHIN THIRTY DAYS AFTER CONSTRUCTION DOCUMENTS HAVE BEEN ISSUED. THE CONTRACTOR SHALL SUBMIT TWO COPIES OF A COMPLETE LIST OF MATERIALS AND EQUIPMENT INCLUDING MANUFACTURER AND MODEL NUMBER PROPOSED FOR THE JOB. SHOP DRAWINGS SHALL INCLUDE JOB DESCRIPTION, ARCHITECT AND ENGINEER IDENTIFICATION, AND ALL DATA WITH CAPACITIES, SIZES, DIMENSIONS, CATALOG NUMBERS, AND MANUFACTURER'S BROCHURES. SHOP DRAWINGS SHALL BE SUBMITTED FOR ITEMS LISTED IN SPECIFICATIONS. PARTIAL, INCOMPLETE, OR UNBOUND SUBMITTALS WILL BE RETURNED WITHOUT REVIEW.
7. AFTER ALL REQUIREMENTS OF THE SPECIFICATIONS AND/OR THE DRAWINGS HAVE BEEN FULLY COMPLETED, REPRESENTATIVES OF THE OWNER WILL INSPECT THE WORK. THE CONTRACTOR SHALL PROVIDE COMPETENT PERSONNEL TO DEMONSTRATE THE OPERATION OF ANY ITEM OR SYSTEM TO THE FULL SATISFACTION OF EACH REPRESENTATIVE. FINAL ACCEPTANCE OF THE WORK WILL BE MADE BY THE OWNER AFTER RECEIPT OF APPROVAL AND RECOMMENDATION OF ACCEPTANCE FROM EACH REPRESENTATIVE.
8. THE CONTRACTOR SHALL FURNISH A ONE YEAR WRITTEN GUARANTEE OF MATERIALS AND WORKMANSHIP FROM THE DATE OF SUBSTANTIAL COMPLETION.
9. EXACT METHOD AND LOCATION OF CONDUIT PENETRATION AND OPENINGS IN CONCRETE WALLS OR FLOORS OR STRUCTURAL STEEL MEMBERS SHALL BE AS DIRECTED BY THE STRUCTURAL ENGINEER. PERFORM CORING, SAWCUTTING, PATCHING, AND REFINISHING OF EXISTING WALLS AND SURFACES WHEREVER IT IS NECESSARY TO PENETRATE. OPENINGS SHALL BE SEALED IN AN APPROVED METHOD TO MEET THE FIRE RATING OF THE PARTICULAR WALL, FLOOR OR CEILING. EXACT METHOD AND LOCATIONS OF CONDUIT PENETRATIONS AND OPENINGS IN CONCRETE WALLS OR FLOORS SHALL BE UL APPROVED.
10. THE EXACT LOCATION OF ALL ELECTRICAL DEVICES AND EQUIPMENT SHALL BE COORDINATED WITH THE ARCHITECTURAL ELEVATIONS, DETAILS, OR SECTIONS PRIOR TO INSTALLATION. ALL ELECTRICAL DEVICES AND EQUIPMENT SHALL BE RECESSED IN WALLS UNLESS OTHERWISE NOTED. OUTLETS NOT INDICATED ON ARCHITECTURAL ELEVATIONS SHALL BE COORDINATED WITH THE ARCHITECT PRIOR TO ROUGH-IN. UNLESS OTHERWISE NOTED, MOUNT ELECTRICAL DEVICES AT THE FOLLOWING HEIGHTS:

TELEPHONE/DATA OUTLETS	+1'-6" SET VERTICALLY.
OUTLETS AT COUNTERS	+6" ABOVE COUNTERS WITHOUT SPLASHES OR CENTERED IN SPLASH SET HORIZONTALLY

11. REVIEW ARCHITECTURAL ELEVATIONS OF CASEWORK. OUTLETS MOUNTED ABOVE OR BELOW, OR ADJACENT TO CASEWORK SHALL BE COORDINATED WITH THE ARCHITECTURAL DRAWINGS, PRIOR TO FINAL ROUGH-IN. ELECTRICAL DRAWINGS SHALL GOVERN NUMBER AND TYPE OF OUTLETS. HOWEVER, LOCATIONS SHALL BE AS INDICATED ON ARCHITECTURAL ELEVATIONS. PROVIDE CONDUIT, WIRES, AND OUTLETS FOR WORK REQUIRED IN CASEWORK INSTALLATIONS. REFERENCE ARCHITECTURAL DETAILS FOR METHOD OF ROUTING CONDUIT WITHIN CASEWORK CONSTRUCTION. THE CONTRACTOR SHALL BE RESPONSIBLE FOR CUT-OUTS IN TILE OR COUNTER SPLASHES WHERE RECEPTACLES, OUTLETS, ETC., OCCUR. PROVIDE BOX EXTENSIONS THROUGH ALL CASEWORK. FINISH FLUSH WITH FACE OF SPLASH, CABINET, ETC.
12. MOUNTING HEIGHTS OF ALL DEVICES AND EQUIPMENT ARE FROM FINISHED FLOOR TO CENTER OF DEVICES AND EQUIPMENT UNLESS OTHERWISE NOTED. BOXES INSTALLED IN LOCATIONS NOT APPROVED BY THE ARCHITECT SHALL BE RELOCATED AS DIRECTED BY THE ARCHITECT AT NO ADDITIONAL COST TO THE OWNER.
13. DRAWINGS ARE DIAGRAMMATIC ONLY. ROUTING OF RACEWAYS SHALL BE AT THE OPTION OF THE CONTRACTOR UNLESS OTHERWISE NOTED AND SHALL BE COORDINATED WITH OTHER SECTIONS. DO NOT SCALE THE ELECTRICAL DRAWINGS FOR LOCATIONS OF ANY ELECTRICAL, ARCHITECTURAL, STRUCTURAL, CIVIL, OR MECHANICAL ITEMS OR FEATURES.
14. THE CONTRACTOR WILL PROPERLY GROUND AND BOND ALL EQUIPMENT TO ELECTRICAL CONTRACTOR PROVIDED AND INSTALLED HOUSE GROUNDING SYSTEM.

ABBREVIATIONS

1P	SINGLE POLE
2/C	TWO-CONDUCTOR
3/C	THREE-CONDUCTOR
3PH	THREE-PHASE
4/C	FOUR-CONDUCTOR
4W	FOUR-WIRE
A/C UNIT	AIR CONDITIONING UNIT
A/E	ARCHITECT/ENGINEER
AAP	ALARM ANNUNCIATOR PANEL
AC	ALTERNATING CURRENT OR ARMORED CABLE
ACC	ACCESSIBLE
ADJ	ADJACENT, ADJOINING
ADO	AUTOMATIC DOOR OPENER
AFC	ABOVE FINISHED COUNTER
AFF	ABOVE FINISHED FLOOR
AFG	ABOVE FINISHED GRADE
AHJ	AUTHORITY HAVING JURISDICTION
ALT	ALTERNATE
AMB	AMBIENT
ARCH	ARCHITECT
ATS	AUTOMATIC TRANSFER SWITCH
AUTO	AUTOMATIC
AV	AUDIO VISUAL
BAT	BATTERY
BC	BARE COPPER
BD	BOARD
BFF	BELOW FINISH FLOOR
BLDG	BUILDING
BPIP	BOILER PLANT INSTRUMENTATION PANEL
BYP	BY PASS
C	CONDUIT
CAB	CABINET
CALC	CALCULATE
CAP	CAPACITY
CAT	CATALOG
CATV	COMMUNITY ANTENNA TELEVISION
CCR	CONTROL CONTACTOR
CCTV	CLOSED CIRCUIT TELEVISION
CD	CONSTRUCTION DOCUMENTS
CF	CONTRACTOR FURNISHED
CF/CI	CONTRACTOR FURNISHED/CONTRACTOR INSTALLED
CF/OI	CONTRACTOR FURNISHED/OWNER INSTALLED
CFE	CONTRACTOR FURNISHED EQUIPMENT
CLG	CEILING
COAX	COAX CABLE
COMM	COMMUNICATION
COMPT	COMPARTMENT
CONC	CONCRETE

CONT	CONTINUE
CONTR	CONTRACTOR
COORD	COORDINATE
CTV	CABLE TELEVISION
CU	COPPER
CU FT	CUBIC FEET
CUR	CURRENT
DB	DECIBEL OR DIRECT BURIAL
DC	DIRECT CURRENT
DEG C	DEGREES CELSIUS
DEG F	DEGREES FAHRENHEIT
DEMO	DEMOLITION
DIAG	DIAGRAM
DISTR	DISTRIBUTION
DN	DOWN
DRSW	DOOR SWITCH
DWG	DRAWING
EC	EMPTY CONDUIT
EG	EQUIPMENT GROUND
EL	ELEVATION
ELEC	ELECTRIC OR ELECTRICAL
ELEV	ELEVATOR
EMER	EMERGENCY
EMT	ELECTRICAL METALLIC TUBING
ENCL	ENCLOSURE
EPO	EMERGENCY POWER OFF
ESMT	EASEMENT
EXIST	EXISTING
FLEX	FLEXIBLE METALLIC CONDUIT
FOUTT	TELEPHONE FLOOR OUTLET
FP	FIRE PROTECTION
FT	FEET OR FOOT
G OR GND	GROUND OR GENERATOR
GEN	GENERATOR
GTB	GROUND TERMINAL BOX
HOA	HAND-OFF-AUTOMATIC
HT	HEIGHT
HZ	HERTZ
IMC	INTERMEDIATE METAL CONDUIT
IR	INFRARED
J-BOX	JUNCTION BOX
LF	LINEAR FEET (FOOT)
LTNG	LIGHTNING
LV	LOW VOLTAGE
MATV	MASTER ANTENNA TELEVISION SYSTEM
MAX	MAXIMUM
MECH	MECHANICAL
MH	MANHOLE
MIN	MINIMUM

NA	NOT APPLICABLE
NEC	NATIONAL ELECTRICAL CODE
NEUT OR N	NEUTRAL
NIC	NOT IN CONTRACT
NS	NO SCALE
NTS	NOT TO SCALE
OC	ON CENTER
OD	OUTSIDE DIAMETER
P	POLE
PA	PUBLIC ADDRESS
PB	PANELBOARD, PULL BOX, OR PUSHBUTTON
PBPU	PREFABRICATED BEDSIDE PATIENT UNIT
PED	PEDESTAL
PEND	PENDANT
PF	POWER FACTOR
PH	PHASE
PNL	PANEL
PVC	POLYVINYL CHLORIDE (PLASTIC)
PWR	POWER
RCP	REFLECTED CEILING PLAN
REC	RECESSED
RECPT	RECEPTACLE
RGS	RIGID GALVANIZED STEEL
RM	ROOM
REQD	REQUIRED
SF	SQUARE FOOT (FEET)
SHT	SHEET
SI	INTERNATIONAL SYSTEM OF UNITS
SPEC	SPECIFICATION
SURF	SURFACE
SW	SWITCH
TEL	TELEPHONE
TP	TWISTED PAIR
TPS	TWISTED PAIR SHIELDED
TTB	TELEPHONE TERMINAL BOARD
TV	TELEVISION
TYP	TYPICAL
UFD	UNDERFLOOR DUCT
UGND	UNDERGROUND
UL	UNDERWRITERS LABORATORY
UON	UNLESS OTHERWISE NOTED
UPS	UNINTERRUPTIBLE POWER SUPPLY
UTIL	UTILITY
V	VOLT
WP	WEATHERPROOF

LOW VOLTAGE SCOPE

1. LOW VOLTAGE CONTRACTOR WILL PROVIDE AND INSTALL COMPLETE SYSTEMS, INCLUDING BUT NOT LIMITED TO, CABLING, HANGERS, CONNECTORS, FACEPLATES, PATCH PANELS, INSTALLATION, SOFTWARE, ACCESSORIES, BATTERY BACKUP, INSTRUCTION, FOR THE FOLLOWING SYSTEMS:
   - VOICE DATA NETWORK CABLING INCLUDING ALL STATION CABLE AND FIBER.
   - DA VINCI VISION CART, SURGEON CONSOLES, & PATIENT CART INTEGRATION WITH THE STRYKER CEILING MOUNTED BOOM.
   - DOOR ACCESS CONTROL AND ENTRY SYSTEMS INCLUDING ALL CARD READERS, CABLING AND CONTROL SYSTEMS TO INTERFACE WITH EXISTING CAMPUS SYSTEM.
2. LOW VOLTAGE CONTRACTOR WILL COORDINATE WITH ARCHITECT, GC, ELECTRICAL CONTRACTOR, STRYKER, DA VINCI AND VA REGARDING ALL FIELD CONDITIONS AND OTHER REQUIREMENTS.
3. LOW VOLTAGE CONTRACTOR IS RESPONSIBLE FOR COORDINATING ALL CONDUIT, POWER DISTRIBUTION AND ROUGH-IN WITH ELECTRICAL CONTRACTOR.
4. SYSTEMS ARE TO BE PROVIDED COMPLETE AND OPERATIONAL IN EVERY WAY WETHER ALL PIECES AND PARTS ARE INDICATED ON PLANS OR NOT.

INDEX

TELECOMMUNICATION INDEX

ET001 - TITLE PAGE, SYMBOLS & NOTES

ET101 - FLOOR PLAN - LEVEL 3 - AREA D - DEMO

ET200 - FLOOR PLAN - LEVEL 3 - SITE - TELECOMMUNICATIONS

ET201 - FLOOR PLAN - LEVEL 3 - AREA D - TELECOMMUNICATIONS

ET301 - ROBOTIC OR - FLOOR PLAN

ET302 - ROBOTIC OR - RCP

ET401 - DETAILS

SYMBOLS

TELECOMMUNICATION SYMBOLS

TELEPHONE OUTLET (VOICE) +18" U.O.N - (1) CAT-6
ELECTRICAL CONTRACTOR TO PROVIDE 4S BOX W/ 1 GANG MUDRING AND 1" CONDUIT TO NEAREST CABLE TRAY.

W — WALL MOUNTED TELEPHONE OUTLET (VOICE) +48" U.O.N - (1)CAT-6
ELECTRICAL CONTRACTOR TO PROVIDE 4S BOX W/ 1 GANG MUDRING AND 1" CONDUIT TO NEAREST CABLE TRAY.

FLOOR MOUNTED VOICE OUTLET - (1) CAT-6
ELECTRICAL CONTRACTOR TO PROVIDE FLOOR TYPE BOX W/ 1" CONDUIT TO NEAREST WALL AND CONTINUE TO NEAREST CABLE TRAY.

DATA OUTLET +18" U.N.O - (1) CAT-6
ELECTRICAL CONTRACTOR TO PROVIDE 4S BOX W/ 1 GANG MUDRING AND 1" CONDUIT TO NEAREST CAMPUS TRAY.

X — DATA OUTLET X = THE NUMBER OF DATA +18" U.N.O - (X) CAT-6
ELECTRICAL CONTRACTOR TO PROVIDE 4S BOX W/ 1 GANG MUDRING AND 1" CONDUIT TO NEAREST CABLE TRAY.

F — DA VINCI FIBER OUTLET +18" U.N.O - (4) STRANDS OF OM3 FIBER (BROADATA PART# 8999-1004 OR EQUAL) WITH LC CONNECTORS INTERCONNECTED TO BOOM. ELECTRICAL CONTRACTOR TO PROVIDE 4S BOX W/ 2 GANG MUDRING AND 1" CONDUIT INTERCONNECT TO BOOM.

FLOOR MOUNTED DATA OUTLET - (1) CAT-6
ELECTRICAL CONTRACTOR TO PROVIDE FLOOR TYPE BOX W/ 1" CONDUIT TO NEAREST WALL AND CONTINUE TO NEAREST CABLE TRAY.

VOICE/DATA OUTLET +18" U.N.O - (4) CAT-6
ELECTRICAL CONTRACTOR TO PROVIDE 4S BOX W/ 1 GANG MUDRING AND 1" CONDUIT TO NEAREST CABLE TRAY.

X/Y — X = THE NUMBER OF VOICE / Y = THE NUMBER OF DATA - OUTLET +18" A.F.F. - (X) CAT-6
ELECTRICAL CONTRACTOR TO PROVIDE 4S BOX W/ 1 GANG MUDRING AND 1" CONDUIT TO NEAREST CABLE TRAY.

CEILING VOICE/DATA OUTLET COORDINATE HEIGHT IN FIELD U.N.O - (4) CAT-6
ELECTRICAL CONTRACTOR TO PROVIDE 4S BOX W/ 1 GANG MUDRING AND 1" CONDUIT TO NEAREST CABLE TRAY.

FLOOR MOUNTED VOICE/DATA OUTLET - (4) CAT-6
ELECTRICAL CONTRACTOR TO PROVIDE FLOOR TYPE BOX W/ 1" CONDUIT TO NEAREST WALL AND CONTINUE TO NEAREST CABLE TRAY.

X/Y — COMBINATION POWER / X = THE NUMBER OF VOICE / Y = THE NUMBER OF DATA - FLOOR BOX - (X) CAT-6
ELECTRICAL CONTRACTOR TO PROVIDE FLOOR TYPE BOX W/ 1" CONDUIT TO NEAREST WALL AND CONTINUE TO NEAREST CABLE TRAY.

TVD — TELEVISION OUTLET COORDINATE HEIGHT IN FIELD U.N.O - (1) RG-6 + (1) CAT-6
ELECTRICAL CONTRACTOR TO PROVIDE 4S BOX W/ 1 GANG MUDRING AND 1" CONDUIT TO NEAREST CABLE TRAY.

D — DISPLAY OUTLET COORDINATE HEIGHT IN FIELD U.N.O - (1) CAT-6
ELECTRICAL CONTRACTOR TO PROVIDE 4S BOX W/ 1 GANG MUDRING AND 1" CONDUIT TO NEAREST CABLE TRAY.

D2 — DISPLAY 2 OUTLET COORDINATE HEIGHT IN FIELD U.N.O - (1) CAT-6 + IN ADDITION, EXTEND OR REPLACE CABLING FROM EXISTING STRYKER / EXTRON CONTROL SYSTEM IN CONFERENCE ROOM TO NEW MONITOR LOCATION. DETERMINE SPECIFIC CABLE REQUIREMENTS IN FIELD.
ELECTRICAL CONTRACTOR TO PROVIDE 4S BOX W/ 1 GANG MUDRING AND 1" CONDUIT TO NEAREST CABLE TRAY.

SECURITY SYMBOLS

CR — CARD READER - MOUNT AT +48" ON CENTER. PROXIMITY READER. REFER TO DETAILS ON ET401 & SECURITY FLOOR PLANS FOR CONDUIT REQUIREMENTS.

RELOCATED EQUIPMENT SYMBOLS

ET — REUSE ELAPSED TIMER FROM EXISTING OPERATING ROOM #8. INSTALL IN NEW OPERATING ROOM #8. EXTEND CABLING AS REQUIRED. SEE DETAIL F1 ON SHEET ET401.

SA — REUSE STRYKER ALERT SYSTEM FROM EXISTING OPERATING ROOM #8. INSTALL IN NEW OPERATING ROOM #8. EXTEND CABLING AS REQUIRED. SEE DETAIL F6 ON SHEET ET401.

REUSE CAMERA FROM EXISTING OPERATING ROOM #8. INSTALL IN NEW OPERATING ROOM #8. EXTEND CABLING AS REQUIRED. SEE DETAIL F4 ON SHEET ET401.

CONSTRUCTION DOCUMENTS
FULLY SPRINKLERED

No.	Description	Date
1	SCHEMATIC DESIGN (SD)	10/20/2015
2	DESIGN DEVELOPMENT (DD)	01/18/2016
3	CONSTRUCTION DOCUMENTS	03/30/2016

CONSULTANTS:

(SEE PROJECT TEAM DIRECTORY ON GI000 COVER SHEET)

Seals and Signatures

REGISTERED COMMUNICATIONS DISTRIBUTION DESIGNER — BICSI — Donald Ramirez — Reg. No. 172030R — Expires 12-31-17 — RCDD

ARCHITECTS/ENGINEERS:

LEO A DALY
PLANNING ARCHITECTURE ENGINEERING INTERIORS
550 South Hope Street, 27 Floor
Los Angeles, California 90071, USA EST. 1915
213-629-0100 F213-629-0070

Drawing Title	TITLE PAGE , SYMBOLS & NOTES
Approved: Project Director	
Project Title	CONSTRUCT OPERATING ROOM #8
Location	11201 BENTON STREET LOMA LINDA, CA 92357
Date	03/30/2016
Checked	AP
Drawn	AR
Project Number	605-14-640
Building Number	1
Drawing Number	ET001

Office of Construction and Facilities Management

Department of Veterans Affairs

VA FORM 08-6231

F1 FLOOR PLAN - LEVEL 3 - AREA D - DEMO
SCALE: 1/4" = 1'-0"

0 2' 4' 8'
SCALE : 1/4" = 1'-0"

PLAN NOTES

1. LOW VOLTAGE CONTRACTOR TO NOTE THAT THE VALL OPERATING ROOM #8 RELOCATION PROJECT WILL BE PHASED. REFER TO ARCHITECTURAL SHEETS G008 & G008A FOR ADDITIONAL INFORMATION.
2. LOW VOLTAGE CONTRACTOR TO ENSURE THAT ADEQUATE TIME INCLUDING MOVE INS AND MOVE OUTS ARE INCLUDED IN THEIR PROPOSAL TO ACCOMMODATE THIS PHASING PLAN.

FLOOR PLAN KEYNOTES

ITEM NUMBER	DESCRIPTION
1	DISCONNECT AND REMOVE ALL EXISTING TELECOM, PA & SECURITY DEVICES, CONDUITS, BOXES AND WIRING TO ITS SOURCE.

KEY PLAN

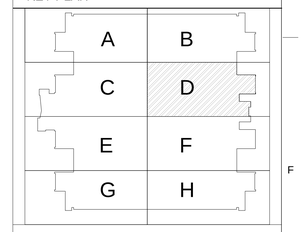

CONSTRUCTION DOCUMENTS
FULLY SPRINKLERED

No.	Description	Date
1	SCHEMATIC DESIGN (SD)	10/20/2015
2	DESIGN DEVELOPMENT (DD)	01/18/2016
3	CONSTRUCTION DOCUMENTS	03/30/2016

CONSULTANTS:

(SEE PROJECT TEAM DIRECTORY ON GI000 COVER SHEET)

Seals and Signatures

REGISTERED COMMUNICATIONS DISTRIBUTION DESIGNER
Bicsi
Donald Ramirez
Reg. No. 17203508
Expires 12-31-17
RCDD

ARCHITECTS/ENGINEERS:

LEO A DALY
PLANNING
ARCHITECTURE
ENGINEERING
INTERIORS
550 South Hope Street, 27 Floor
Los Angeles, California 90071, USA
213-629-0100 F213-629-0070
EST. 1915

Drawing Title
FLOOR PLAN - LEVEL 3 - AREA D DEMO

Approved: Project Director

Project Title
CONSTRUCT OPERATING ROOM #8

Location
11201 BENTON STREET
LOMA LINDA, CA 92357

Date	Checked	Drawn
03/30/2016	AP	AR

Project Number
605-14-640

Building Number
1

Drawing Number
ET101

Office of Construction and Facilities Management

Department of Veterans Affairs

VA FORM 08-6231

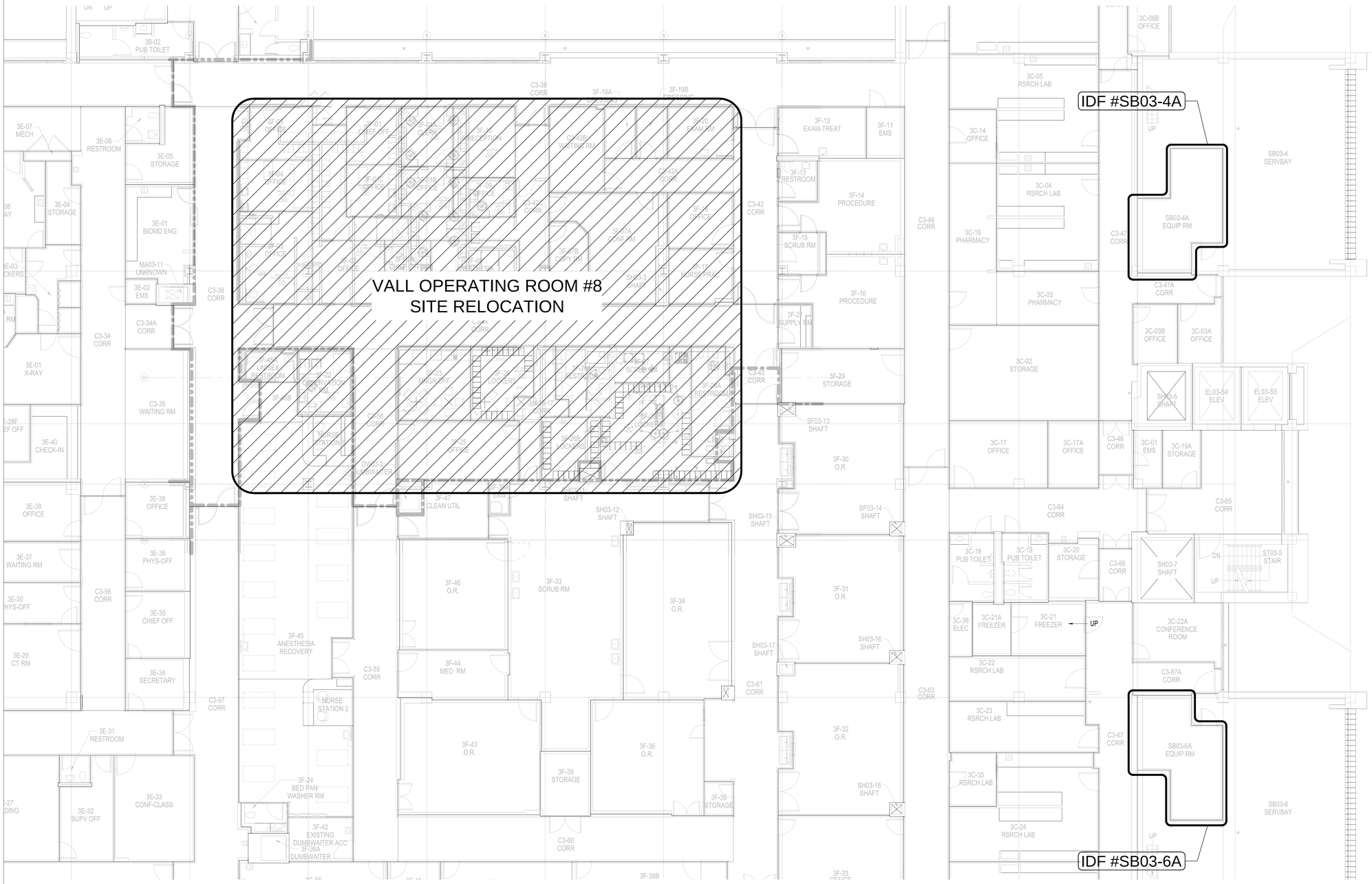

F1 **FLOOR PLAN - LEVEL 3 - AREA D**
SCALE: 1/8" = 1'-0"

0 2' 8' 16'
SCALE : 1/8" = 1'-0"

PLAN NOTES

NOTES:

1. LOW VOLTAGE CONTRACTOR TO TAKE ALL LOW VOLTAGE CABLING TO EITHER IDF #SB03-4A OR IDF #SB03-6A AS REQUIRED. VERIFY IN FIELD.

FLOOR PLAN KEYNOTES

ITEM NUMBER	DESCRIPTION

KEY PLAN

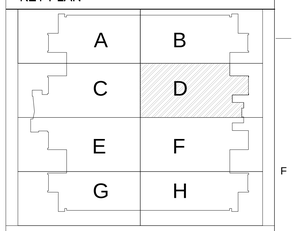

CONSTRUCTION DOCUMENTS
FULLY SPRINKLERED

No.	Description	Date
1	SCHEMATIC DESIGN (SD)	10/20/2015
2	DESIGN DEVELOPMENT (DD)	01/18/2016
3	CONSTRUCTION DOCUMENTS	03/30/2016

CONSULTANTS:

(SEE PROJECT TEAM DIRECTORY ON GI000 COVER SHEET)

Seals and Signatures

DEDICATED COMMUNICATIONS DISTRIBUTION DESIGNER
Bicsi
Donald Ramirez
Reg. No. 1720508
Expires 12-31-17
RCDD

ARCHITECTS/ENGINEERS:

LEO A DALY
PLANNING ARCHITECTURE ENGINEERING INTERIORS
550 South Hope Street, 27 Floor
Los Angeles, California 90071, USA
213-629-0100 F213-629-0070
EST. 1915

Drawing Title: FLOOR PLAN - LEVEL 3 - SITE TELECOMMUNICATIONS

Approved: Project Director

Project Title: CONSTRUCT OPERATING ROOM #8

Location: 11201 BENTON STREET LOMA LINDA, CA 92357

Date: 03/30/2016 | Checked: AP | Drawn: AR

Project Number: 605-14-640

Building Number: 1

Drawing Number: ET200

Office of Construction and Facilities Management

Department of Veterans Affairs

VA FORM 08-6231

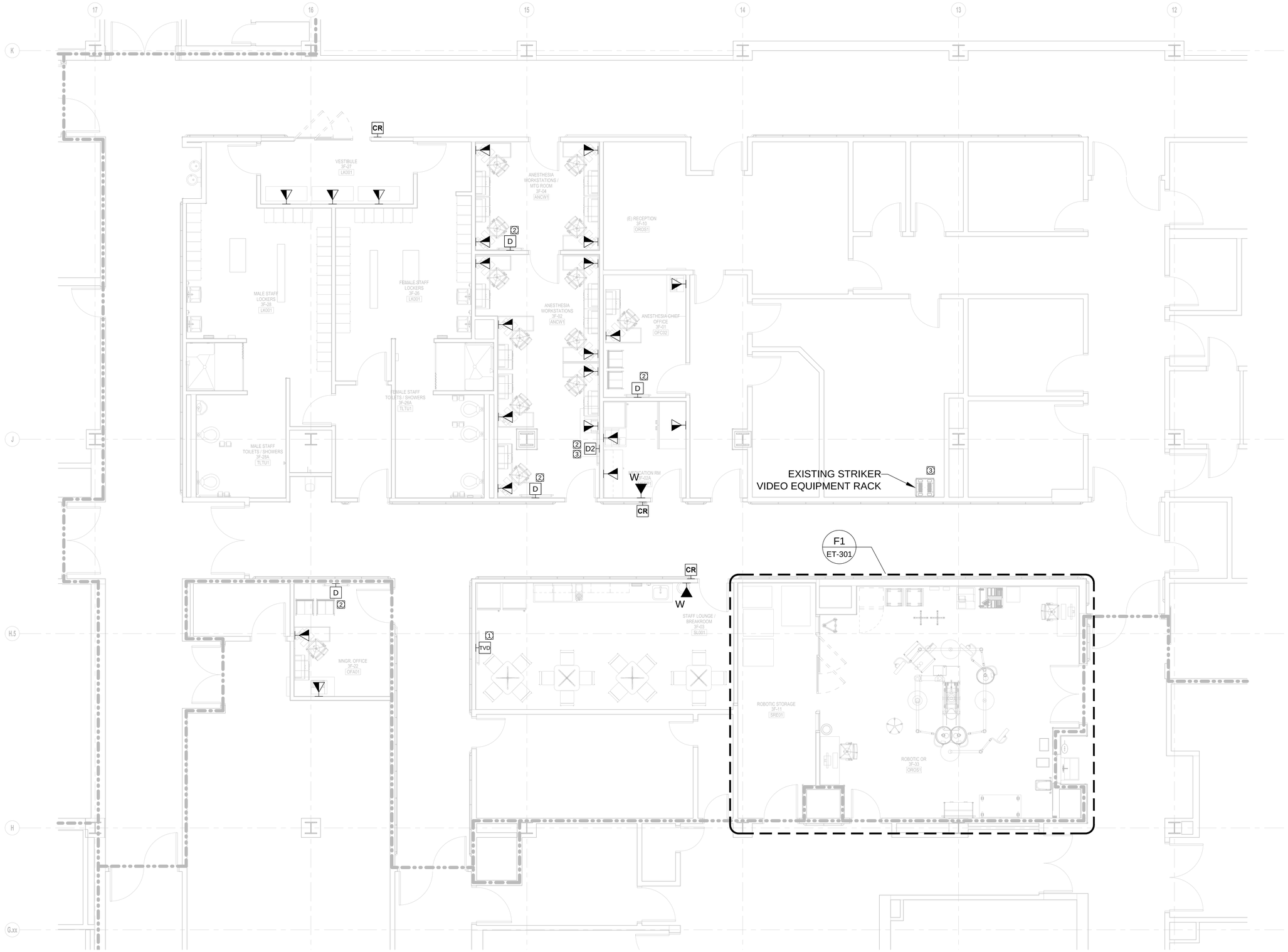

F1 FLOOR PLAN - LEVEL 3 - AREA D
SCALE: 1/4" = 1'-0"

0 2' 4' 8'
SCALE : 1/4" = 1'-0"

PLAN NOTES

FLOOR PLAN KEYNOTES

ITEM NUMBER	DESCRIPTION
1	78" TO CENTER.
2	84" TO CENTER.
3	EXTEND OR REPLACE CABLING FROM EXISTING STRYKER / EXTRON CONTROL SYSTEM IN CONFERENCE ROOM TO NEW MONITOR LOCATION. DETERMINE SPECIFIC CABLE REQUIREMENTS IN FIELD.

KEY PLAN

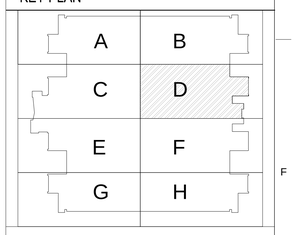

CONSTRUCTION DOCUMENTS
FULLY SPRINKLERED

No.	Description	Date
1	SCHEMATIC DESIGN (SD)	10/20/2015
2	DESIGN DEVELOPMENT (DD)	01/18/2016
3	CONSTRUCTION DOCUMENTS	03/30/2016

CONSULTANTS:

(SEE PROJECT TEAM DIRECTORY ON GI000 COVER SHEET)

Seals and Signatures

REGISTERED COMMUNICATIONS DISTRIBUTION DESIGNER
Bicsi
Donald Ramirez
Reg. No. 17203026
Expires 12-31-17
RCDD

ARCHITECTS/ENGINEERS:

LEO A DALY
PLANNING
ARCHITECTURE
ENGINEERING
INTERIORS
550 South Hope Street, 27 Floor
Los Angeles, California 90071, USA EST. 1915
213-629-0100 F213-629-0070

Drawing Title
FLOOR PLAN - LEVEL 3 - AREA D
TELECOMMUNICATIONS

Approved: Project Director

Project Title
CONSTRUCT OPERATING ROOM #8

Location
11201 BENTON STREET
LOMA LINDA, CA 92357

Date 03/30/2016 | Checked AP | Drawn AR

Project Number 605-14-640

Building Number 1

Drawing Number ET201

Office of Construction and Facilities Management

Department of Veterans Affairs

VA FORM 08-6231

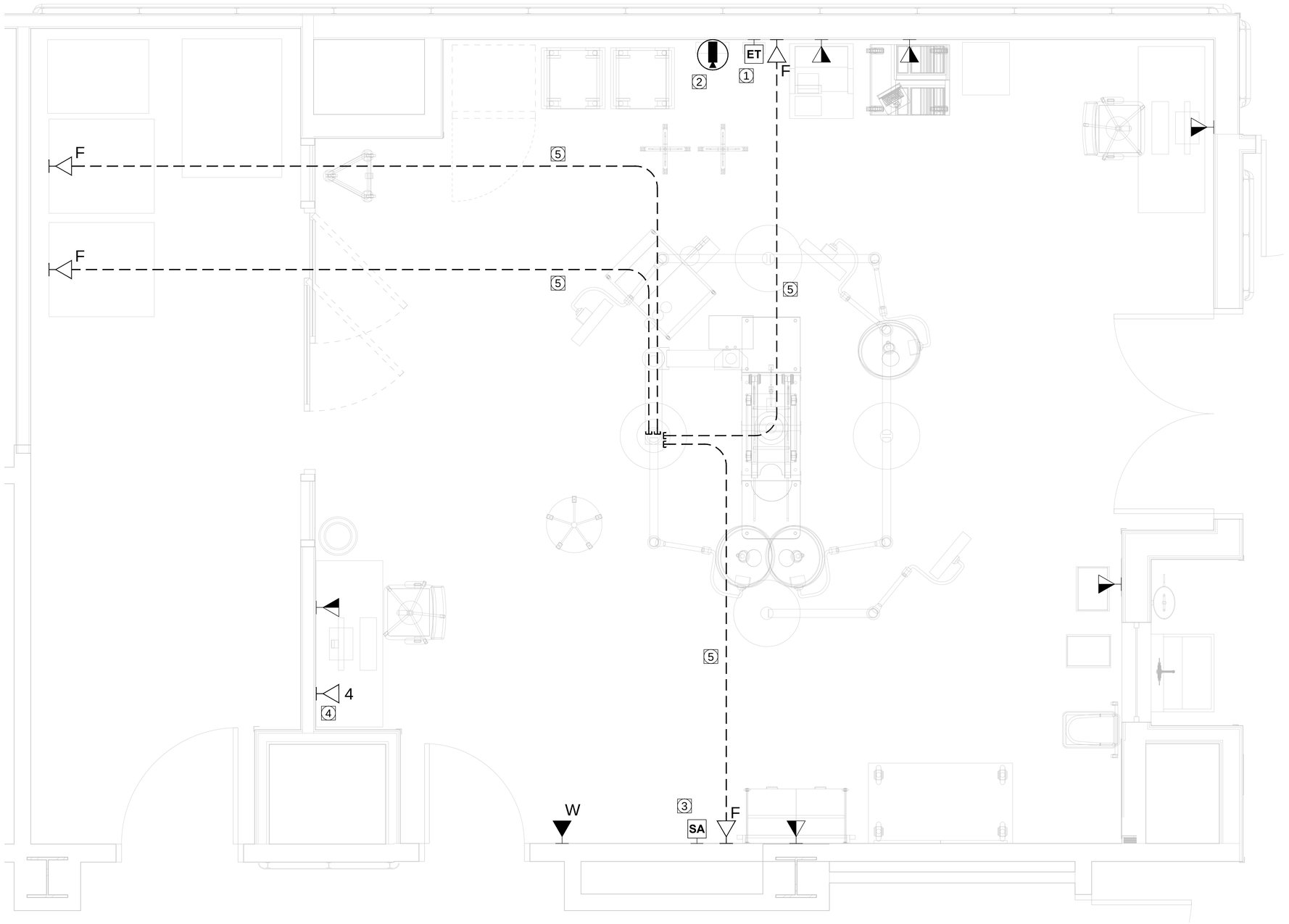

F1 ROBOTIC OR - FLOOR PLAN
SCALE: 3/4" = 1'-0"

0 1' 2'
SCALE : 3/4" = 1'-0"

PLAN NOTES

1. LOW VOLTAGE CONTRACTOR TO PURCHASE AND INSTALL VISIONBOOM INTEGRATOR'S KIT FOR DA VINCI SI PART# 380928. CONTRACTOR TO COORDINATE FINAL REQUIREMENTS WITH DAVINCI & STRYKER.

FLOOR PLAN KEYNOTES

ITEM NUMBER	DESCRIPTION
1	REUSE ELAPSED TIMER FROM EXISTING OPERATING ROOM #8. INSTALL IN NEW OPERATING ROOM #8. EXTEND CABLING AS REQUIRED. SEE DETAIL F1 ON SHEET ET401.
2	REUSE CAMERA FROM EXISTING OPERATING ROOM #8. INSTALL IN NEW OPERATING ROOM #8. EXTEND CABLING AS REQUIRED. SEE DETAIL F4 ON SHEET ET401.
3	REUSE STRYKER ALERT SYSTEM FROM EXISTING OPERATING ROOM #8. INSTALL IN NEW OPERATING ROOM #8. EXTEND CABLING AS REQUIRED. SEE DETAIL F6 ON SHEET ET401.
4	DATA OUTLET FOR STRYKER USE ONLY.
5	1" CONDUIT INTERCONNECT FROM WALL PLATE TO CEILING MOUNTED BOOM. ROUTE AND TERMINATE 4 STRAND FIBER CABLES FROM EACH WALL PLATE LOCATION TO TERMINATION PLATES LOCATED ON BOOM.

KEY PLAN

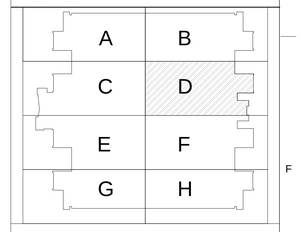

CONSTRUCTION DOCUMENTS
FULLY SPRINKLERED

No.	Description	Date
1	SCHEMATIC DESIGN (SD)	10/20/2015
2	DESIGN DEVELOPMENT (DD)	01/18/2016
3	CONSTRUCTION DOCUMENTS	03/30/2016

CONSULTANTS:

(SEE PROJECT TEAM DIRECTORY ON GI000 COVER SHEET)

Seals and Signatures

REGISTERED COMMUNICATIONS DISTRIBUTION DESIGNER
Bicsi
Donald Ramirez
Reg. No. 17203508
Expires 12-31-17
RCDD

ARCHITECTS/ENGINEERS:

LEO A DALY
PLANNING ARCHITECTURE ENGINEERING INTERIORS
550 South Hope Street, 27th Floor
Los Angeles, California 90071, USA
213-629-0100 F213-629-0070
EST. 1915

Drawing Title: ROBOTIC OR - FLOOR PLAN

Approved: Project Director

Project Title: CONSTRUCT OPERATING ROOM #8

Location: 11201 BENTON STREET LOMA LINDA, CA 92357

Date: 03/30/2016 | Checked: AP | Drawn: AR

Project Number: 605-14-640

Building Number: 1

Drawing Number: ET301

Office of Construction and Facilities Management

Department of Veterans Affairs

VA FORM 08-6231

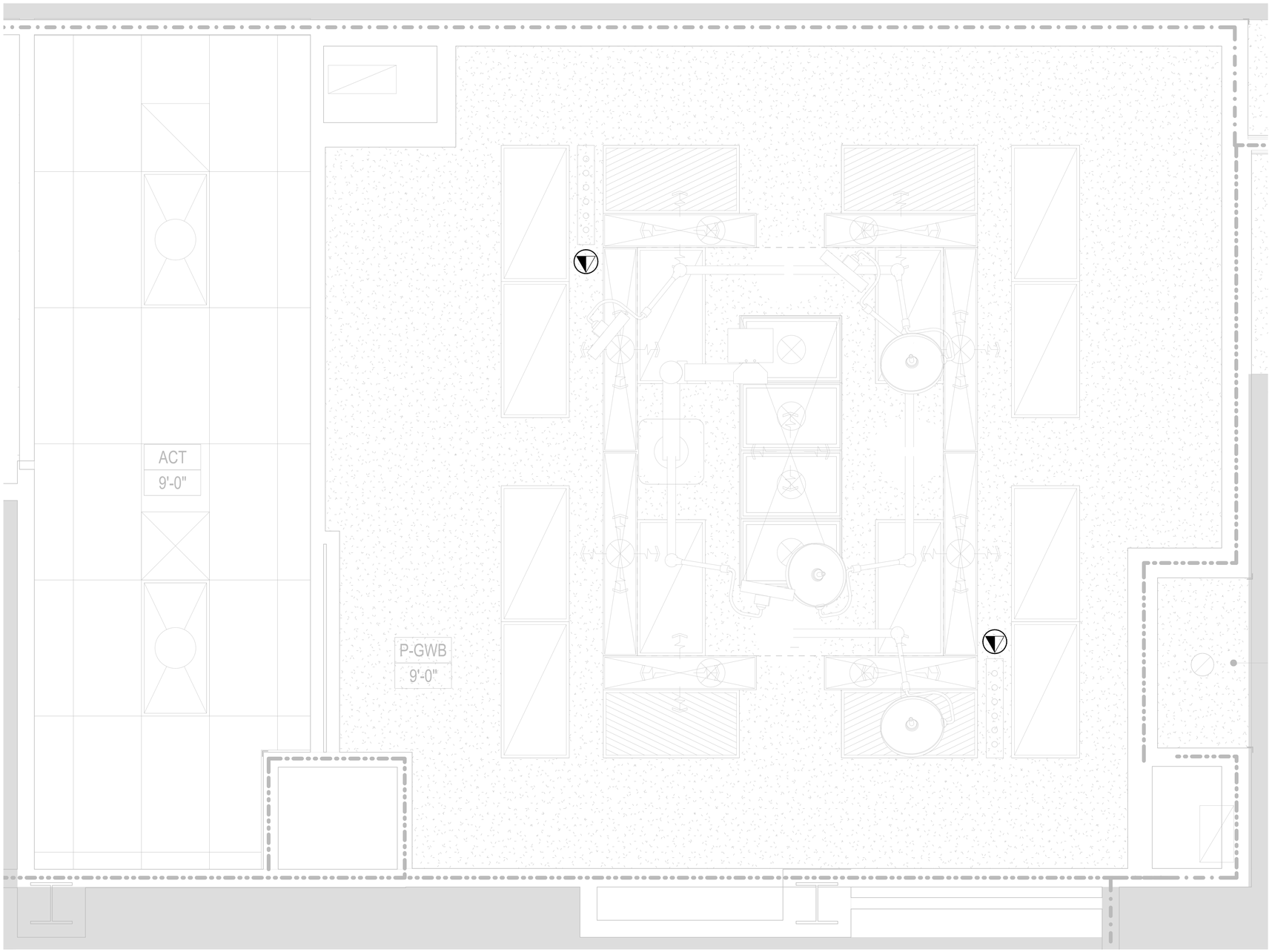

F5 **ROBOTIC OR - RCP**
SCALE: 3/4" = 1'-0"

0 1' 2'
SCALE : 3/4" = 1'-0"

PLAN NOTES

FLOOR PLAN KEYNOTES

ITEM NUMBER	DESCRIPTION

KEY PLAN

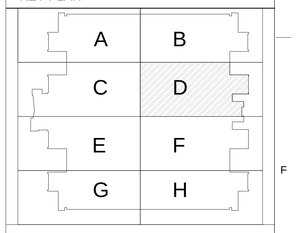

CONSTRUCTION DOCUMENTS
FULLY SPRINKLERED

No.	Description	Date
1	SCHEMATIC DESIGN (SD)	10/20/2015
2	DESIGN DEVELOPMENT (DD)	01/18/2016
3	CONSTRUCTION DOCUMENTS	03/30/2016

CONSULTANTS:

(SEE PROJECT TEAM DIRECTORY ON GI000 COVER SHEET)

Seals and Signatures

REGISTERED COMMUNICATIONS DISTRIBUTION DESIGNER
BICSI
Donald Ramirez
Reg. No. 17203026
EXPIRES 12-31-17
RCDD

ARCHITECTS/ENGINEERS:

LEO A DALY
PLANNING
ARCHITECTURE
ENGINEERING
INTERIORS
550 South Hope Street, 27 Floor
Los Angeles, California 90071, USA
213-629-0100 F213-629-0070
EST. 1915

Drawing Title
ROBOTIC OR - RCP

Approved: Project Director

Project Title
CONSTRUCT OPERATING ROOM #8

Location
11201 BENTON STREET
LOMA LINDA, CA 92357

Date 03/30/2016
Checked AP
Drawn AR

Project Number 605-14-640
Building Number 1
Drawing Number ET302

Office of Construction and Facilities Management
Department of Veterans Affairs

VA FORM 08-6231

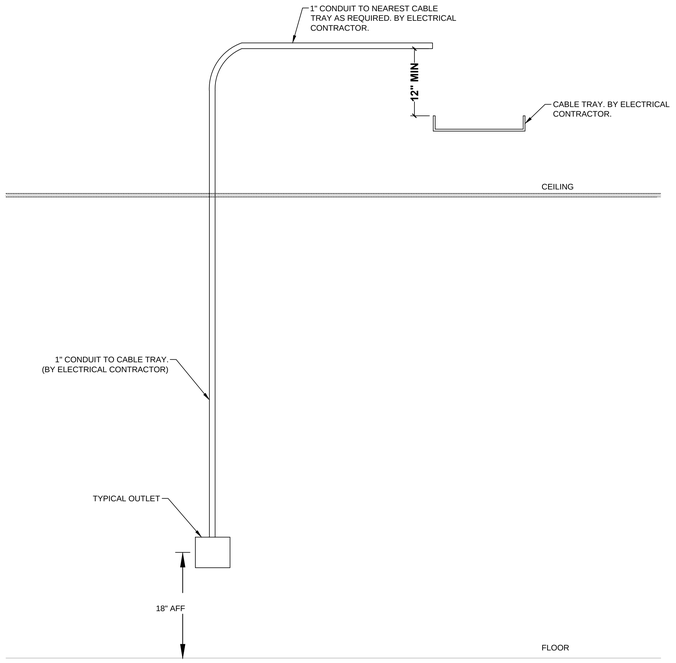

C1 TYPICAL OUTLET DETAIL
SCALE: NTS

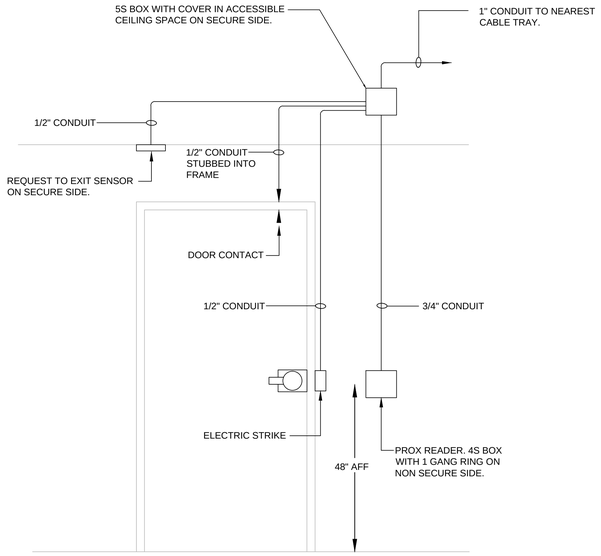

C6 TYPICAL PROX READER - SINGLE DOOR
SCALE: NTS

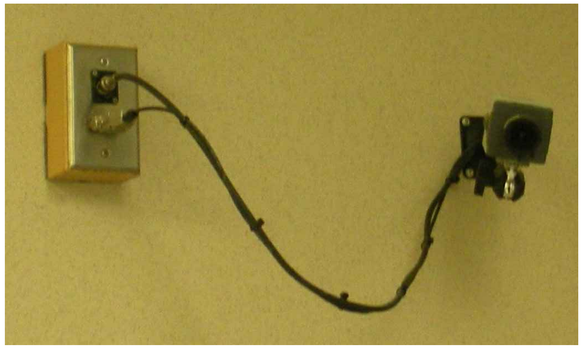

F1 CAMERA
SCALE: NTS

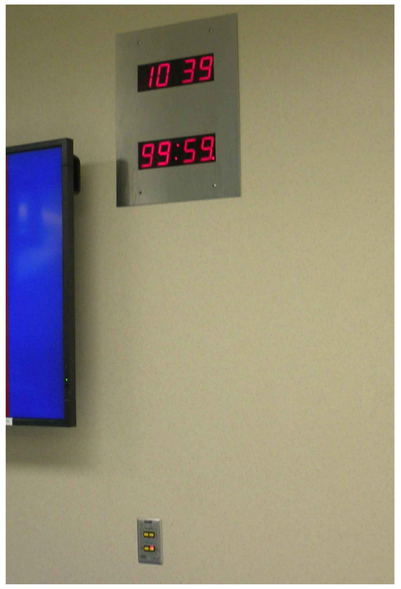

F4 ELAPSED TIMER
SCALE: NTS

F6 STRYKER ALERT SYSTEM
SCALE: NTS

PLAN NOTES

FLOOR PLAN KEYNOTES

ITEM NUMBER	DESCRIPTION

KEY PLAN

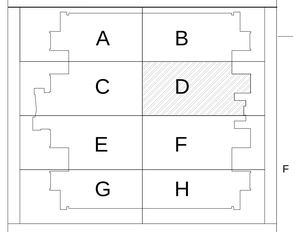

CONSTRUCTION DOCUMENTS
FULLY SPRINKLERED

No.	Description	Date
1	SCHEMATIC DESIGN (SD)	10/20/2015
2	DESIGN DEVELOPMENT (DD)	01/18/2016
3	CONSTRUCTION DOCUMENTS	03/30/2016

CONSULTANTS:

(SEE PROJECT TEAM DIRECTORY ON GI000 COVER SHEET)

Seals and Signatures

REGISTERED COMMUNICATIONS DISTRIBUTION DESIGNER
BICSI
Donald Ramirez
Reg. No. 1720308
EXPIRES 12-31-17
RCDD

ARCHITECTS/ENGINEERS:

LEO A DALY
PLANNING
ARCHITECTURE
ENGINEERING
INTERIORS
550 South Hope Street, 27 Floor
Los Angeles, California 90071, USA EST. 1915
213-629-0100 F213-629-0070

Drawing Title: DETAILS

Approved: Project Director

Project Title: CONSTRUCT OPERATING ROOM #8

Location: 11201 BENTON STREET LOMA LINDA, CA 92357

Date	Checked	Drawn
03/30/2016	AP	AR

Project Number: 605-14-640

Building Number: 1

Drawing Number: ET401

Office of Construction and Facilities Management

Department of Veterans Affairs

VA FORM 08-6231

LOMA LINDA VA

OR 8

LOMA LINDA, CA

DATE: 08 MAR 16

DIRECTORY

SALES REP: JONATHAN GRAY 714.813.0857

JONATHAN.GRAY@STRYKER.COM

PROJECT MANAGER: AMY TANG 469.781.4369

AMY.TANG@STRYKER.COM

ENGINEER: GOPESH SHARMA 206.257.8310

GOPESH.SHARMA@STRYKER.COM

TABLE OF CONTENTS

EQUIPMENT LAYOUTS ..... (R) SHEET SECTION

PRE-INSTALL NOTES ..... (P) SHEET SECTION

ENGINEERING APPROVAL

AUTHORIZED SIGNATURE:

DRAWING#: CA-20163-1579_1

APPROVED REVISION:1

DISCLAIMER: THIS DOCUMENT CONTAINS CONFIDENTIAL AND PROPRIETARY INFORMATION OF STRYKER. NEITHER THIS DOCUMENT NOR THE INFORMATION HEREIN MAY BE REPRODUCED, USED, OR DISCLOSED TO OR FOR THE BENEFIT OF ANY THIRD PARTY WITHOUT THE PRIOR WRITTEN CONSENT OF STRYKER.

1410 LAKE SIDE PARKWAY, SUITE 100
FLOWER MOUND, TX 75028
PHONE: (877) 789-8106
E-FAX: (408) 754-2995
www.stryker.com

stryker®

FOR REFERENCE ONLY

REP: JONATHAN GRAY
PM: AMY TANG

SHEET:
TITLE

NOTES: (UNLESS OTHERWISE SPECIFIED)

EQUIPMENT SCHEDULE

KEY ITEM	NAME	QTY
A	CHROMOPHARE F628 SURGICAL LIGHT (1000)	1
B	CHROMOPHARE F628 SURGICAL LIGHT (1000) / SINGLE FLAT PANEL (900)	1
C	CHROMOPHARE F628 SURGICAL LIGHT (1000) / SINGLE FLAT PANEL (900)	1
F	TELETOM TC TP-622-C EQUIPMENT BOOM (1300) / SINGLE FLAT PANEL (900)	1
H	CUSTOMER DOC STATION	1
J	SWITCHPOINT INFINITY 3	1
K	CHROMOPHARE SK ENCLOSURE	1
L	CHROMOPHARE WALL CONTROL PANEL	1
N	WALL PLATE | VGA/S-VIDEO/BNC	1
P	55" LCD MONITOR	1

CONDUIT SCHEDULE

CONDUIT RUN ITEM - ITEM	CONDUIT QTY	CONDUIT SIZE
A - K	2	1"
A - B	1	1"
B - J	1	1 1/4"
B - K	2	1"
B - C	1	1"
C - J	1	1 1/4"
C - K	2	1"
F - J	1	1 1/4"
F - J	2	2"
L - K	1	1"
K - *	1	1"
N - J	1	1"
P - J	1	1 1/4"

* - NEAREST ELECTRICAL PANEL

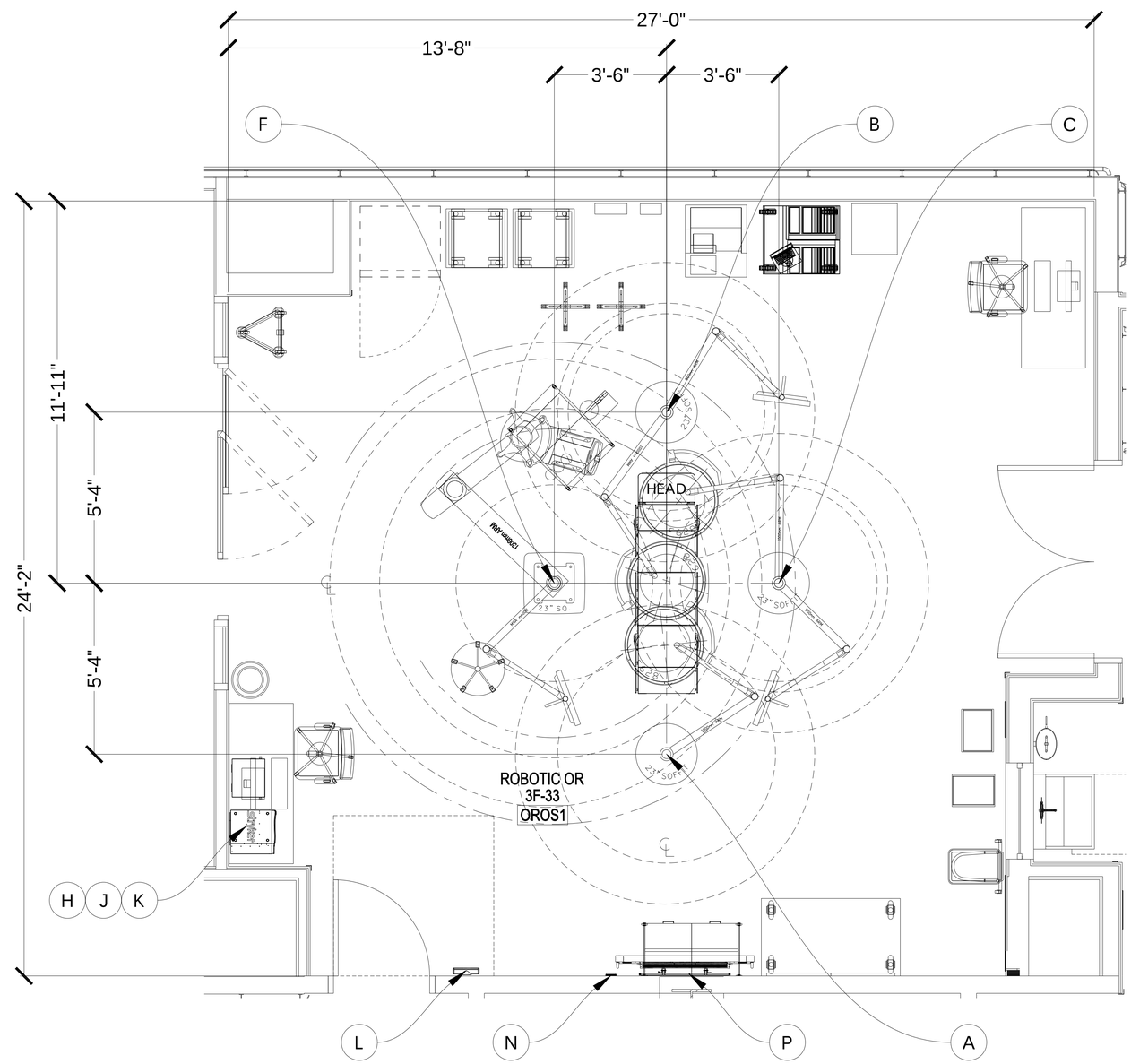

FOR REFERENCE ONLY

SCALE: ½" = 1'

AUTOCAD DRAWING TEMPLATE | TEM100XX | REV. A

PLOT STAMP:REED, JEFF | DATE: 3/8/2016 12:54 PM

stryker®
1410 LAKESIDE PARKWAY, SUITE 100
FLOWER MOUND, TEXAS 75028
PHONE: (877) 789-8106
FAX: (972) 410-7001
www.stryker.com

REV:	DATE:	DRAWING #: CA-20163-1579_1	DRAFTER	IR
1	08MAR16	REFERENCE #: CSR20163-2568	JREED	---

DISCLAIMER

THIS DOCUMENT CONTAINS CONFIDENTIAL AND PROPRIETARY INFORMATION OF STRYKER. NEITHER THIS DOCUMENT NOR THE INFORMATION HEREIN MAY BE REPRODUCED, USED, OR DISCLOSED TO OR FOR THE BENEFIT OF ANY THIRD PARTY WITHOUT THE PRIOR WRITTEN CONSENT OF STRYKER.

EQUIPMENT LAYOUT

OPERATING ROOM #8

LOMA LINDA VA

—

LOMA LINDA, CA

REP: JONATHAN GRAY
PM: AMY TANG

SHEET:

R-OR8

NOTES: (UNLESS OTHERWISE SPECIFIED)

1. ALL CONDUIT RUNS INCLUDE INSULATED BUSHINGS AND PULL STRINGS.
2. CONDUIT RUNS CANNOT EXCEED 50' FROM END-TO-END. DO NOT EXCEED FOUR (4) 90 DEGREE BENDS.
3. CABLES BETWEEN ITEMS OVER 50 FEET IN LENGTH ARE PROVIDED BY THE CUSTOMER / CONTRACTOR. PLEASE REFER TO EQUIPMENT LIST FOR CABLE SPECIFICATIONS.
4. THE PRE-INSTALL MANUAL REQUIREMENTS SUPERSEDE ALL PRE-INSTALL NOTES IN THIS DRAWING PACKAGE.
5. EQUIPMENT LIST:

PRE-INSTALL NOTES SCHEDULE

KEY ITEM	NAME
A	**CHROMOPHARE SURGICAL LIGHT** CONDUIT: REFER TO ROOM LAYOUT FOR CONDUIT SIZE. TERMINATE ALL CONDUITS WITHIN 18" OF THE CENTER OF THE CEILING MOUNT. LIGHT POWER: REFER TO SK ENCLOSURE (ITEM K) NOTE FOR POWER. ACCESS PANEL: ONE (1) 24" X 24" ACCESS PANEL ADJACENT TO SUSPENSION. STRUCTURAL: STRYKER PRE-INSTALL PLATE SHALL BE INSTALLED BY CUSTOMER/CONTRACTOR AT FLUSH WITH FINISHED CEILING PER CUSTOMER PROVIDED STRUCTURAL ENGINEER SPECS. - NEW CONSTRUCTION, A 12" CIRCULAR HOLE CENTERED ON STRYKER PRE-INSTALL PLATE IN THE FINISHED CEILING IS REQUIRED FOR NEW INSTALLATION. A 18" CIRCULAR CEILING COVER CONCEALS HOLE AFTER SUSPENSION IS INSTALLED. - RENOVATION, A 18.25" CIRCULAR HOLE CENTERED ON STRYKER PRE-INSTALL PLATE IN THE FINISHED CEILING IS REQUIRED FOR NEW INSTALLATION. A 23" CIRCULAR CEILING COVER CONCEALS HOLE AFTER SUSPENSION IS INSTALLED.
B C	**CHROMOPHARE SURGICAL LIGHT / SINGLE FLAT PANEL (SFP)** **CHROMOPHARE SURGICAL LIGHT / SINGLE FLAT PANEL (SFP)** CONDUIT: REFER TO ROOM LAYOUT FOR CONDUIT SIZE. TERMINATE ALL CONDUITS WITHIN 18" OF THE CENTER OF THE CEILING MOUNT. MONITOR POWER: ONE (1) - 20 AMP CIRCUIT LOCATED AT JUNCTION BOX WITHIN 18" OF CENTER OF STRYKER PRE-INSTALL PLATE. - THE CONTRACTOR / ELECTRICIAN TO HARDWIRE STRYKER ELECTRICAL WHIPS DURING STRYKER INSTALLATION. INSTALL ONE (1) - 5 AMP FUSE FOR 100V- 120V APPLICATIONS, OR A 2.5 AMP FUSE FOR 200V-240V APPLICATIONS, IF REQUIRED BY LOCAL ELECTRICAL CODE. THESE FUSES MUST BE PROVIDED BY THE CONTRACTOR. LIGHT POWER: REFER TO SK ENCLOSURE (ITEM K) NOTE FOR POWER. ACCESS PANEL: ONE (1) 24" X 24" ACCESS PANEL ADJACENT TO SUSPENSION. STRUCTURAL: STRYKER PRE-INSTALL PLATE SHALL BE INSTALLED BY CUSTOMER/CONTRACTOR FLUSH WITH FINISHED CEILING PER CUSTOMER PROVIDED STRUCTURAL ENGINEER SPECS. - NEW CONSTRUCTION, A 12" CIRCULAR HOLE CENTERED ON STRYKER PRE-INSTALL PLATE IN THE FINISHED CEILING IS REQUIRED FOR NEW INSTALLATION. A 18" CIRCULAR CEILING COVER CONCEALS HOLE AFTER SUSPENSION IS INSTALLED. - RENOVATION, A 18.25" CIRCULAR HOLE CENTERED ON STRYKER PRE-INSTALL PLATE IN THE FINISHED CEILING IS REQUIRED FOR NEW INSTALLATION. A 23" CIRCULAR CEILING COVER CONCEALS HOLE AFTER SUSPENSION IS INSTALLED.

PRE-INSTALL NOTES SCHEDULE

KEY ITEM	NAME
F	**TC MOUNT: TELETOM TP-622-C EQUIPMENT BOOM / SINGLE FLAT PANEL (SFP)** CONDUIT: REFER TO ROOM LAYOUT FOR CONDUIT SIZE. TERMINATE ALL CONDUITS WITHIN 18" OF THE CENTER OF THE CEILING MOUNT. BOOM/LIGHT POWER: REFER TO TELETOM MANUFACTURING SERVICE MODULE DRAWING FOR ELECTRICAL CIRCUIT COUNT. - ALL BOOM ELECTRICAL CIRCUITS SHALL BE CONNECTED TO TELETOM OUTLET BOX. - MOUNT TC JUNCTION BOX WITHIN 3' OF BOOM MOUNT FOR SURGICAL LIGHT POWER - THE CONTRACTOR / ELECTRICIAN TO HARDWIRE STRYKER ELECTRICAL WHIP DURING STRYKER INSTALLATION. MONITOR POWER: ONE (1) - 20 AMP CIRCUIT LOCATED AT JUNCTION BOX WITHIN 18" OF CENTER OF STRYKER PRE-INSTALL PLATE. - THE CONTRACTOR / ELECTRICIAN TO HARDWIRE STRYKER ELECTRICAL WHIPS DURING STRYKER INSTALLATION. INSTALL ONE (1) - 5 AMP FUSE FOR 100V- 120V APPLICATIONS, OR A 2.5 AMP FUSE FOR 200V-240V APPLICATIONS, IF REQUIRED BY LOCAL ELECTRICAL CODE. THESE FUSES MUST BE PROVIDED BY THE CONTRACTOR. PLUMBING: INSTALL VALVE BRIDGE TO TOP OF PRE-INSTALL PLATE. ALL GAS LINES MUST BE TERMINATED WITH STRYKER SUPPLIED GAS RISERS BY CUSTOMER/MEDGAS INSTALLER. - ALL FINAL DISS CONNECTIONS TO BE MADE BY CUSTOMER/MEDGAS INSTALLER AFTER STRYKER INSTALLATION. ACCESS PANEL: ONE (1) 24" X 24" ACCESS PANEL ADJACENT TO SUSPENSION. ON THE OUTLET BOX SIDE OF THE MOUNTING PLATE. STRUCTURAL: TELETOM PRE-INSTALL PLATE SHALL BE INSTALLED BY CUSTOMER/CONTRACTOR AT 2.5-INCH, ± .125-INCH ABOVE FINISHED CEILING PER CUSTOMER PROVIDED STRUCTURAL ENGINEER SPECS. - REQUIRED: A 22" SQUARE HOLE CENTERED ON STRYKER PRE-INSTALL PLATE IN THE FINISHED CEILING IS REQUIRED FOR INSTALLATION. A 23.5" SQUARE CEILING COVER CONCEALS HOLE AFTER SUSPENSION IS INSTALLED.
H	**CUSTOMER DOC STATION** POWER: RECOMMEND SEVEN (7) - 20 AMP CIRCUITS - ONE (1) CIRCUIT FOR QUAD OUTLET BEHIND SPI3 ROUTER. - ONE (1) CIRCUIT FOR QUAD OUTLET BEHIND POWER SUPPLY BOX. - ONE (1) CIRCUIT FOR DUPLEX OUTLET UNDER TOUCH PANEL. - ONE (1) CIRCUIT FOR QUAD OUTLET BEHIND DIGITAL CAPTURE DEVICE. - THREE (3) CIRCUITS FOR THREE (3) QUAD OUTLETS BEHIND ADDITIONAL STRYKER PROVIDED EQUIPMENT (IF REQUIRED) - ALL CIRCUITS REQUIRE CRITICAL POWER. SPACE REQUIREMENTS: CASEWORK/DOC STATION MUST ALLOW FOR A MINIMUM 2" CABLE PASSAGE BETWEEN ALL COMPONENTS HOUSED INSIDE. - SECTION HOUSING VIDEO ROUTER MUST HAVE AN INTERIOR DIMENSION OF AT LEAST 27.5"W X 31"H X 29"D. - SECTION HOUSING VIDEO ROUTER MUST BE VENTED. - CASEWORK/DOC STATION MUST ALLOW FOR DIRECT ACCESS TO BACKBOXES PER REQUIREMENTS LISTED BELOW. DATA: PER LISTED EQUIPMENT. BACKBOX: PER LISTED EQUIPMENT. NOTE: CUSTOMER / CONTRACTOR RESPONSIBLE FOR RECEIVING AND INSTALLATION OF DOCUMENTATION STATION PRIOR TO STRYKER INSTALLATION.

FOR REFERENCE ONLY

AUTOCAD DRAWING TEMPLATE | TEM100XX | REV. A

PLOT STAMP:REED, JEFF | DATE: 3/8/2016 12:54 PM

stryker®
1410 LAKESIDE PARKWAY, SUITE 100
FLOWER MOUND, TEXAS 75028
PHONE: (877) 789-8106
FAX: (972) 410-7001
www.stryker.com

REV:	DATE:	DRAWING #: CA-20163-1579_1	DRAFTER	IR
1	08MAR16	REFERENCE #: CSR20163-2568	JREED	----

DISCLAIMER
THIS DOCUMENT CONTAINS CONFIDENTIAL AND PROPRIETARY INFORMATION OF STRYKER. NEITHER THIS DOCUMENT NOR THE INFORMATION HEREIN MAY BE REPRODUCED, USED, OR DISCLOSED TO OR FOR THE BENEFIT OF ANY THIRD PARTY WITHOUT THE PRIOR WRITTEN CONSENT OF STRYKER.

PRE-INSTALL NOTES

LOMA LINDA VA
—
LOMA LINDA, CA

REP: JONATHAN GRAY
PM: AMY TANG

SHEET:
P-1

NOTES: (UNLESS OTHERWISE SPECIFIED)

1. ALL CONDUIT RUNS INCLUDE INSULATED BUSHINGS AND PULL STRINGS.
2. CONDUIT RUNS CANNOT EXCEED 50' FROM END-TO-END. DO NOT EXCEED FOUR (4) 90 DEGREE BENDS.
3. CABLES BETWEEN ITEMS OVER 50 FEET IN LENGTH ARE PROVIDED BY THE CUSTOMER / CONTRACTOR. PLEASE REFER TO EQUIPMENT LIST FOR CABLE SPECIFICATIONS.
4. THE PRE-INSTALL MANUAL REQUIREMENTS SUPERSEDE ALL PRE-INSTALL NOTES IN THIS DRAWING PACKAGE.
5. EQUIPMENT LIST:

PRE-INSTALL NOTES SCHEDULE

KEY ITEM	NAME
J	**SWITCHPOINT INFINITY 3** DIMENSIONS: - MEDIA ROUTER: 20.6"W X 24"H X 17"D - CONTROL SECTION: 12.5"W X 2.6"H X 17"D - TOTAL SPACE REQUIRED: 27.5"W X 31"H X 29"D DATA: ONE (1) ETHERNET CONNECTION BACKBOX: ONE (1) 18"W X 18"H X 4"D (OR LARGER) JUNCTION BOX FLUSH MOUNTED. - SET BOTTOM OF BOX 9" ABOVE FINISHED FLOOR. NOTE: TERMINATE ALL INTEGRATION CONDUITS TO THIS JUNCTION BOX.
K	**CHROMOPHARE SK ENCLOSURE** CONDUIT: ROUTE TO EACH LIGHT MOUNTING LOCATION, BETWEEN LIGHT MOUNTING LOCATIONS, AND NEAREST ELECTRICAL PANEL (120VAC). MAXIMUM LENGTH OF 45 FEET (15M) OF CONDUIT RUN TO BOTH THE MOUNTING PLATE AND THE TO WALL CONTROL BOX. MUST BE EASILY ACCESSIBLE, EITHER BY INSTALLATION INTO A WALL, OR IN THE INTERSTITIAL SPACE WITH ACCESS PANEL. POWER: - AC WIRING: WIRING SHOULD BE 3 WIRE, 12AWG MIN., AND 600V, TERMINATED TO THE FUSED TERMINAL BLOCK INSIDE THE SK ENCLOSURE. (UP TO 3 LIGHTS PER SK ENCLOSURE) - DC WIRING: WIRES SHOULD CONSIST OF 1 PAIR PER LIGHT HEAD AND 1 GROUND WIRE PER MOUNTING RING. WIRES TERMINATE AT THE NON-FUSED TERMINAL BLOCK INSIDE THE SK ENCLOSURE. WIRING SHOULD RUN FROM OUTPUT OF THE SK ENCLOSURE AND FALL A MINIMUM OF 18-INCHES BELOW THE CEILING AT THE MOUNTING RING.
L	**CHROMOPHARE WALL CONTROL PANEL** CONDUIT: ROUTE TO SK ENCLOSURE (ELECTRONICS). BACK BOX: ONE (1) STANDARD 4X4 JUNCTION BOX. POWER: NONE
N	**TRIPLE WALL PLATE (VGA/S-VIDEO/BNC)** CONDUIT: REFER TO ROOM LAYOUT FOR CONDUIT SIZE. BACK BOX: ONE (1) 4"W X 4"H JUNCTION BOX WITH SINGLE-GANG MUD RING - MOUNT THE J-BOX 18" ABOVE FINISHED FLOOR. POWER: NONE REQUIRED, BUT SHOULD BE LOCATED NEXT TO OUTLET.
P	**55" LCD MONITOR** CONDUIT: REFER TO ROOM LAYOUT FOR CONDUIT SIZE. BACK BOX: ONE (1) 4"W X 4"H JUNCTION BOX WITH SINGLE-GANG MUD RING - MOUNTED DIRECTLY ABOVE THE TOP OF THE MOUNTING BRACKET. POWER: ONE (1) STANDARD DUPLEX OUTLET MOUNTED ADJACENT TO JUNCTION BOX. STRUCTURAL: CUSTOMER/CONTRACTOR TO MOUNT STRYKER PROVIDED BRACKET TO THE WALL IN THE DESIRED LOCATION WITH PROPER REINFORCEMENT TO SUPPORT THE MONITOR PRIOR TO STRYKER INSTALLATION. DIMENSIONS: 51.9" X 30.5" X 4.7" NOTE: STRYKER PROJECT MANAGER WILL PROVIDE MOUNTING SPECIFICATIONS.

FOR REFERENCE ONLY

stryker®
1410 LAKESIDE PARKWAY, SUITE 100
FLOWER MOUND, TEXAS 75028
PHONE: (877) 789-8106
FAX: (972) 410-7001
www.stryker.com

REV:	DATE:	DRAWING #: CA-20163-1579_1	DRAFTER	IR
1	08MAR16	REFERENCE #: CSR20163-2568	JREED	---

DISCLAIMER
THIS DOCUMENT CONTAINS CONFIDENTIAL AND PROPRIETARY INFORMATION OF STRYKER. NEITHER THIS DOCUMENT NOR THE INFORMATION HEREIN MAY BE REPRODUCED, USED, OR DISCLOSED TO OR FOR THE BENEFIT OF ANY THIRD PARTY WITHOUT THE PRIOR WRITTEN CONSENT OF STRYKER.

PRE-INSTALL NOTES

LOMA LINDA VA
—
LOMA LINDA, CA

REP: JONATHAN GRAY
PM: AMY TANG

SHEET:
P-2