SYMBOL & ABBREVIATION SCHEDULE

NOTES:

1. THIS SCHEDULE IS A STANDARD SCHEDULE, CERTAIN SYMBOLS & ABBREVIATIONS INDICATED ON THIS SCHEDULE MAY NOT APPEAR ON THE DRAWINGS.
2. EQUIPMENT SYMBOLS SHOWN DASHED ON THE DRAWINGS INDICATE EXISTING EQUIPMENT.
3. CERTAIN MOUNTING HEIGHTS INDICATED ON THIS DRAWING ARE TO BE USED AS A GUIDE ONLY AND MAY HAVE TO BE CHANGED TO COMPLY WITH REGULATIONS GOVERNING MOUNTING HEIGHTS OF EQUIPMENT FOR USE BY THE PHYSICALLY HANDICAPPED. CONSULT WITH THE AUTHORITY HAVING JURISDICTION BEFORE EQUIPMENT INSTALLATION AND INSTALL ACCORDINGLY.

ELECTRICAL SYMBOLS - LIGHTING PLAN

- X — LIGHT FIXTURE, RECESSED FLUORESCENT, LETTER INDICATES TYPE.
- X — LIGHT FIXTURE, SURFACE MOUNTED FLUORESCENT, LETTER INDICATES TYPE.
- PNL-CKT X / X — LIGHT FIXTURE, FLUORESCENT EMERGENCY; LETTERS INDICATE TYPE AND EMERGENCY SYSTEM. PNL-CKT INDICATES CONNECTED BRANCH CIRCUIT.
- X — LIGHT FIXTURE, STRIP/INDUSTRIAL FLUORESCENT; LETTER INDICATES TYPE.
- X — LIGHT FIXTURE, WALL MOUNTED; LETTER INDICATES TYPE.
- X — LIGHT FIXTURE, SUSPENDED MOUNTED FLUORESCENT, LETTER INDICATES TYPE.
- X — DOWNLIGHT FIXTURE CEILING RECESSED MOUNTED; LETTER INDICATES TYPE.
- X / X — EMERGENCY DOWNLIGHT FIXTURE CEILING RECESSED MOUNTED; LETTERS INDICATE TYPE AND EMERGENCY SYSTEM.
- X — EXIT SIGN, WALL MOUNTED WITH DIRECTIONAL ARROWS AND FACES AS SHOWN; LETTER INDICATES TYPE.
- X — EXIT SIGN, CEILING MOUNTED WITH DIRECTIONAL ARROWS AND FACES AS SHOWN; LETTER INDICATES TYPE.
- $3 — SWITCH

BLANK = SINGLE POLE
3 = THREE-WAY
4 = FOUR-WAY
D = DIMMER
AB= INBOARD/OUTBOARD CONTROL
T = TIMER OPERATED, LOW VOLTAGE, DIGITAL
M = SINGLE POLE, MANUAL MOTOR SWITCH W/ OVERLOADS
LV = UNO, SINGLE BUTTON, LOW VOLTAGE, NON-DIGITAL
TS = DIGITAL, TOUCH-LESS SENSOR TYPE SWITCH.

L1 = SINGLE BUTTON, LOW VOLTAGE, DIGITAL
L2 = TWO BUTTON, LOW VOLTAGE, DIGITAL
L3 = THREE BUTTON, LOW VOLTAGE, DIGITAL
L4 = FOUR BUTTON, LOW VOLTAGE, DIGITAL
L5 = FIVE BUTTON, LOW VOLTAGE, DIGITAL
L8 = EIGHT BUTTON, LOW VOLTAGE, DIGITAL

LIGHTING CONTROL LEGEND

- OS — DIGITAL, DUAL TECHNOLOGY CEILING MOUNTED SENSOR
- OS — DIGITAL DUAL TECHNOLOGY, CEILING OR CORNER MOUNTED, BEAM TYPE
- RC — ABOVE CEILING, ON/OFF DIGITAL ROOM CONTROLLER
- DRC — ABOVE CEILING ON/OFF/0-10V DIMMING DIGITAL ROOM CONTROLLER
- IR — ABOVE CEILING, DIGITAL, ISOLATED RELAY INTERFACE

DOOR ACCESS (PACS) LEGEND

- E X — ELECTRONIC LOCK; SUB TEXT= M = MOTOTRIZED MG = MAGNETIC LOCK
- RX x — REQUEST TO EXIT DEVICES M = PIR MOTION W/SPDT SWITCH P = PUSH BUTTON W/ INTERGRAL TIMER I = INTEGRATED LOCKSET/PANIC BAR
- W 5 — WALL MOUNTED PHYSICAL ACCESS CONTROL PROXIMITY READER
- C — DOOR POSITION SWITCH
- PS — 24V DOOR POWER SUPPLY

ELECTRICAL SYMBOLS - POWER PLAN

- M — MOTOR - SEE DRAWINGS FOR RATING OF MOTOR
- M MOD — MOTOR OPERATED DAMPER - 120V-1Ø
- J — JUNCTION BOX
- WW — ABOVE CEILING ENCLOSED WIREWAY/CABLE TRAY SIZE AS NOTED.
- NEUTRAL / GROUND / PHASE CONDUCTORS / No OF CKT'S IN CONDUIT — HOMERUN TO PANEL - ARROWHEADS INDICATE QUANTITY OF CIRCUITS. WIRES INDICATED ARE GREEN GROUND, NEUTRAL AND THREE HOT LEGS (A DIFFERENT PHASE FOR EACH CIRCUIT). MAXIMUM THREE CIRCUITS PER CONDUIT. UNLESS NOTED OTHERWISE, PROVIDE 2 #12 & 1 #12 GRD IN 3/4"C. FOR SINGLE PHASE WORK, 3 #12 & 1#12 GRD. IN 3/4"C. FOR THREE PHASE WORK.
- R — DISCONNECT, RELOCATE AND RECONNECT
- CROSSHATCHING INDICATES EQUIPMENT AND/OR WIRING TO BE RENDERED DEAD AND REMOVED BY EC
- SWITCH LEG
- BRANCH CIRCUIT
- SWITCHED CIRCUIT
- PB — PULL BOX
- OR — PANELBOARD CABINET, SURFACE MOUNTED
- RECEPTACLE, DUPLEX
- RECEPTACLE, DUPLEX ON EMERGENCY POWER
- AB — RECEPTACLE, DUPLEX, ABOVE COUNTER
- GFI — RECEPTACLE, DUPLEX, WITH GROUND FAULT CIRCUIT INTERRUPTER
- TV — TV RECEPTACLE, DUPLEX, MATCH MOUNTING HEIGHT OF TELEVISION OUTLET
- BRANCH CKT # M — PATIENT MONITOR RECEPTACLE, DUPLEX, CONNECTED BRANCH CIRCUIT AS INDICATED
- Y — FINAL CONNECTION TO EQUIPMENT BY ELECTRICAL CONTRACTOR
- Y VVB — FINAL CONNECTION TO VARIABLE VOLUME BOX
- Y ADO — FINAL CONNECTION TO AUTOMATIC DOOR OPENER - 120V-1Ø
- Y PBUN — FINAL CONNECTION TO PREFABRICATED BEDSIDE PATIENT UNIT - 120V-1Ø NORMAL POWER BRANCH CIRCUIT(S) AS INDICATED
- Y PBUE — FINAL CONNECTION TO PREFABRICATED BEDSIDE PATIENT UNIT - 120V-1Ø, NORMAL/EMERGENCY BRANCH CIRCUIT(S) AS INIDCATED
- Y BED — FINAL CONNECTION TO PREFABRICATED BED LOCATOR - 120V-1Ø
- Y SF — FINAL CONNECTION TO SINK FAUCET W/ SENSOR - 120V-1Ø
- Y XV — FINAL CONNECTION TO ILLUMINATED X-RAY VIEWER - 120V-1Ø
- Y SLB — FINAL CONNECTION TO SURGICAL LIGHTING BOOM - 120V-1Ø
- Y SPB — FINAL CONNECTION TO SURGICAL POWER BOOM - 120V-1Ø
- Y EL — FINAL CONNECTION TO ELECTRONIC LOCK - 120V-1Ø
- HEAVY DUTY DISCONNECT SWITCH, FUSED, RATING AS NOTED ON DRAWINGS
- HEAVY DUTY DISCONNECT SWITCH, UNFUSED, RATING AS NOTED ON DRAWINGS
- COMBINATION STARTER/HEAVY DUTY DISCONNECT SWITCH. RATING AS NOTED ON DRAWINGS
- VFD — VARIABLE FREQUENCY DRIVE - RATING AS NOTED
- Y — POWERED RACEWAY
- ISOLATED POWER/GROUNDING MODULES. QUANTITY OF DEVICES WITHIN MODULE AS INDICATED BY NUMBER NEXT TO SYMBOL
- CONNECTION NEW TO EXISTING

CLOCK SYSTEM LEGEND

- C — WALL MOUNTED ANALOG CLOCK
- C ETC — WALL ELAPSED TIME CLOCK

COMMUNICATION SYMBOLS

- FOUR PORT TELECOMMUNICATIONS OUTLET, COMBINATION TELEPHONE/DATA COMMUNICATION. SEE DRAWING ES602 FOR ADDITIONAL INFORMATION.
- WAP — WIRELESS ACCESS POINT SINGLE DATA OUTLET, MOUNT OUTLET FLUSH WITH FINISHED CEILING. SEE DRAWING ES602 FOR ADDITIONAL INFORMATION.
- W — SINGLE OUTLET, TELEPHONE, SEE DRAWING ES602 FOR ADDITIONAL INFORMATION.
- M — SINGLE OUTLET, DATA CONNECTION FOR PATIENT MONITORING SYSTEM. SEE DRAWING ES602 FOR ADDITIONAL INFORMATION.
- TV — TELEVISION SYSTEM OUTLET
- S — SPEAKER, 8" ROUND, CEILING MOUNTED
- S V — SPEAKER, 8" ROUND, VOLUME CONTROL, CEILING MOUNTED
- $ V — ROTARY SPEAKER VOLUME CONTROLLER

FIRE ALARM SYSTEM SYMBOLS

- FACP — ALARM, FIRE, CONTROL PANEL
- FATC — ALARM, FIRE, TERMINAL CABINET.
- IAM — FIRE ALARM SYSTEM INDIVIDUAL ADDRESSABLE MODULE
- F — ALARM, FIRE, MANUAL PULL STATION
- S FA — FIRE ALARM SYSTEM CEILING MOUNTED SPEAKER/STROBE
- S FA — FIRE ALARM SYSTEM CEILING MOUNTED SPEAKER
- ALARM, LAMP LIGHT, SIGNAL LIGHT, STROBE
- DH — ELECTROMAGNETIC TYPE DOOR HOLDER OUTLET
- F S — DETECTOR; LETTER INDICATES AS FOLLOWS:

S = PHOTOELECTRIC SMOKE DETECTOR
SE = ELEVATOR RECALL PHOTOELECTRIC SMOKE DETECTOR

- F SD — FIRE ALARM SYSTEM SMOKE DAMPER - 120V-1Ø
- F DD — FIRE ALARM SYSTEM DUCT DETECTOR
- FS — FIRE ALARM SYSTEM - FLOW SWITCH FOR SPRINKLER SYSTEM
- TS — FIRE ALARM SYSTEM - TAMPER SWITCH FOR SPRINKLER SYSTEM

NURSE CALL SYSTEM LEGEND

- N GS — GRAPHICAL ROOM STATION WITH CODE BLUE
- N S — STAFF STATION (NON-GRAPHICAL) WITHOUT CODE BLUE
- N SE — STAFF EMERGENCY WITHOUT CODE BLUE
- N CB — CODE BLUE
- N E — EMERGENCY BATH STATION WITH PULLCORD AND CANCEL
- N PB — EMERGENCY BATH STATION WITH PUSHBUTTON AND CANCEL
- N B — ROOM CONTROL BOARD
- N BC — AUDIO STATION BED CONNECTOR
- N — CORRIDOR DOME LIGHT WITH ONE LAMP
- N D — CORRIDOR DOME LIGHT WITH EMERGENCY FLASH FUNCTION
- N POE — POWER OVER ETHERNET (POE) SWITCH
- NMS — NURSE CALL MASTER STATION
- GAN — NURSE CALL GRAPHIC ANNUNCIATOR STATION
- NCT — NURSE CALL SYSTEM POWER SUPPLY/TERMINAL CABINET

ABBREVIATIONS

1PH	SINGLE-PHASE
1P	SINGLE POLE
2/C	TWO-CONDUCTOR
3/C	THREE-CONDUCTOR
3PH	THREE-PHASE
4/C	FOUR-CONDUCTOR
4W	FOUR-WIRE
A/C UNIT	AIR CONDITIONING UNIT
A/E	ARCHITECT/ENGINEER
AB	ABOVE COUNTER
AC	ALTERNATING CURRENT OR ARMORED CABLE
ACC	ACCESSIBLE
ADDL	ADDITIONAL
ADJ	ADJACENT, ADJOINING
ADO	AUTOMATIC DOOR OPENER
AFC	ABOVE FINISHED COUNTER
AFF	ABOVE FINISHED FLOOR
AFG	ABOVE FINISHED GRADE
AHJ	AUTHORITY HAVING JURISDICTION
ALT	ALTERNATE
AMB OR A	AMBIENT
ARCH	ARCHITECT
ATS	AUTOMATIC TRANSFER SWITCH
AUTO	AUTOMATIC
AV	AUDIO VISUAL
BAT	BATTERY
BC	BARE COPPER
BD	BOARD
BFF	BELOW FINISH FLOOR
BLDG	BUILDING
BPIP	BOILER PLANT INSTRUMENTATION PANEL
BYP	BY PASS
C	CONDUIT
CAB	CABINET
CALC	CALCULATE
CAP	CAPACITY
CAT	CATALOG
CATV	COMMUNITY ANTENNA TELEVISION
CC	CRITICAL CARE
CCTV	CLOSED CIRCUIT TELEVISION
CD	CONSTRUCTION DOCUMENTS
CF	CONTRACTOR FURNISHED
CF/CI	CONTRACTOR FURNISHED/CONTRACTOR INSTALLED
CF/OI	CONTRACTOR FURNISHED/OWNER INSTALLED
CFE	CONTRACTOR FURNISHED EQUIPMENT
CKT	CIRCUIT
CLG	CEILING
CMU	CONCRETE MASONRY UNIT
COAX	COAX CABLE
COMM	COMMUNICATION
COMPT	COMPARTMENT
CONC	CONCRETE
CONT	CONTINUE
CONTR	CONTRACTOR
COORD	COORDINATE
CRS	COLD ROLLED STEEL
CTV	CABLE TELEVISION
CU	COPPER
CU FT	CUBIC FEET
CUR	CURRENT
DB	DECIBEL OR DIRECT BURIAL
DC	DIRECT CURRENT
DEG C	DEGREES CELSIUS
DEG F	DEGREES FAHRENHEIT
DEMO	DEMOLITION
DIAG	DIAGRAM
DISTR	DISTRIBUTION
DN	DOWN
DRSW	DOOR SWITCH
DWG	DRAWING
EC	EMPTY CONDUIT
EE	ESSENTIAL EQUIPMENT
EG	EQUIPMENT GROUND
EL	ELEVATION
ELEC	ELECTRIC OR ELECTRICAL
ELEV	ELEVATOR
EMER	EMERGENCY
EMI	ELECTROMAGNETIC INTERFERENCE
EMT	ELECTRICAL METALLIC TUBING
ENCL	ENCLOSURE
EPO	EMERGENCY POWER OFF
ETR	EXISTING TO REMAIN
EX OR EXIST	EXISTING
FLEX	FLEXIBLE METALLIC CONDUIT
FOUTT	TELEPHONE FLOOR OUTLET
FP	FIRE PROTECTION
FT	FEET OR FOOT
FU SW	FUSED SWITCH
G OR GND	GROUND OR GENERATOR
GEN	GENERATOR
GTB	GROUND TERMINAL BOX
HOA	HAND-OFF-AUTOMATIC
HPC	HIGH PAIR COUNT
HT	HEIGHT
HZ	HERTZ
IMC	INTERMEDIATE METAL CONDUIT
IR	INFRARED
J-BOX	JUNCTION BOX
LAN	LOCAL AREA NETWORK
LF	LINEAR FEET (FOOT)
LTG	LIGHTING
LTNG	LIGHTNING
LS	LIFE SAFETY
LV	LOW VOLTAGE
LVL(S)	LEVEL(S)
MATV	MASTER ANTENNA TELEVISION SYSTEM
MAX	MAXIMUM
MECH	MECHANICAL
MIN	MINIMUM
MM	MULTI-MODE
MT	MOUNT
MTD	MOUNTED
MTG	MOUNTING
NA	NOT APPLICABLE
NEC	NATIONAL ELECTRICAL CODE
NEUT OR N	NEUTRAL
NIC	NOT IN CONTRACT
NS	NO SCALE
NTS	NOT TO SCALE
OC	ON CENTER
OD	OUTSIDE DIAMETER
P	POLE
PA	PUBLIC ADDRESS
PACS	PHYSICAL ACCESS CONTROL SYSTEM
PB	PULL BOX, OR PUSHBUTTON
PBPU	PREFABRICATED BEDSIDE PATIENT UNIT
PEND	PENDANT
PF	POWER FACTOR
PH	PHASE
PNL	PANELBOARD
PVC	POLYVINYL CHLORIDE (PLASTIC)
PWR	POWER
RCP	REFLECTED CEILING PLAN
REC	RECESSED
RECPT	RECEPTACLE
RGS	RIGID GALVANIZED STEEL
RLA	RUNNING LOAD AMPS
RM	ROOM
REQD	REQUIRED
SF	SQUARE FOOT (FEET)
SHT	SHEET
SI	INTERNATIONAL SYSTEM OF UNITS
SPEC	SPECIFICATION
SURF	SURFACE
SW	SWITCH
TEL	TELEPHONE
TP	TWISTED PAIR
TPS	TWISTED PAIR SHIELDED
TTB	TELEPHONE TERMINAL BOARD
TV	TELEVISION
TYP	TYPICAL
UFD	UNDERFLOOR DUCT
UGND	UNDERGROUND
UL	UNDERWRITERS LABORATORY
UNO	UNLESS NOTED OTHERWISE
UPS	UNINTERRUPTIBLE POWER SUPPLY
UTIL	UTILITY
V	VOLT
WP	WEATHERPROOF
XFMR	TRANSFORMER

FIRE RATED WALL LEGEND:

- SMOKE BARRIER
- 1-HOUR FIRE RATED WALL
- 2-HOUR FIRE RATED WALL

GENERAL NOTES

1. ALL FINAL LOCATIONS AND ARRANGEMENTS OF LIGHTING FIXTURES SHALL BE OBTAINED FROM THE ARCHITECTURAL REFLECTED CEILING PLAN.
2. LIGHTING FIXTURES WITH MORE THAN TWO LAMPS SHALL HAVE TWO OUTER LAMPS CONTROLLED WITH ONE SWITCH AND INNER LAMP(S) CONTROLLED BY A SECOND SWITCH.
3. (1) EACH BRANCH CIRCUIT HOMERUN SHALL HAVE NO MORE THAN THREE CIRCUITS. EACH BRANCH CIRCUIT HOMERUN SHALL HAVE A SEPARATE GREEN INSULATED EQUIPMENT GROUNDING CONDUCTOR.
4. MULTI-GANG BACKBOXES FOR DIFFERENT VOLTAGES AND TYPES OF EMERGENCY AND NORMAL BRANCH WIRING DEVICES SHALL HAVE DIVIDERS BETWEEN DEVICES.
5. IT IS CALLED TO THE CONTRACTORS ATTENTION THAT THE INTENT OF THE DRAWINGS AND SPECIFICATIONS IS TO INSTALL ALL NEW WIRING CONCEALED (FISHED THRU OPENINGS IN EXISTING BUILDING CONSTRUCTION) IN FINISH AREAS OF THE BUILDING CONSTRUCTION. THE USE OF EXPOSED SURFACE RACEWAYS WILL NOT BE PERMITTED UNLESS APPROVED BY THE RESIDENT ENGINEER, WHERE BUILDING CONSTRUCTION MUST BE CUT TO CONCEAL NEW CONDUIT AND WIRING THE CONTRACTOR SHALL SAW CUT A CHANNEL IN BUILDING CONSTRUCTION, INSTALL NEW CONDUIT AND PATCH AND FINISH DISTURBED AREAS TO MATCH ADJACENT SURFACES AS APPROVED BY THE ARCHITECT.
6. ALL ELECTRICAL WORK SHALL BE INSTALLED IN ACCORDANCE WITH THE LATEST NATIONAL ELECTRICAL CODE, IN PARTICULAR ARTICLE #517, AND ALL APPLICABLE FEDERAL, STATE, AND LOCAL CODES.
7. ALL WIRE, CONDUIT, CONNECTORS, OUTLETS BOXES, ETC. NECESSARY TO ACHIEVE A COMPLETE ELECTRICAL INSTALLATION SHALL BE PROVIDED, WHERE AN ELECTRICAL DEVICE IS REQUIRED BY CODE BUT NOT SHOWN SHALL BE PROVIDED AS THOUGH FULLY SHOWN AND SPECIFIED.
8. ALL CONDUIT, JUNCTION BOXES, ETC, ABOVE CEILINGS SHALL BE SUPPORTED FROM THE BUILDING DECK, LIGHTING FIXTURES WHICH ARE INSTALLED IN SUSPENDED CEILING SYSTEM MUST BE MECHANICALLY FASTENED TO T-BAR SYSTEM AS PER SPECIFICATIONS.
9. NEW OPENINGS, CHASES IN WALLS, FLOORS AND PARTITIONS FOR CONDUIT, HANGERS, SUPPORTS AND OTHER EQUIPMENT IN THE EXISTING BUILDING SHALL BE PROVIDED AS REQUIRED FOR THE NEW AND REMODELED INSTALLATION, NEW OPENINGS IN EXISTING CONSTRUCTION AND THE REPAIR OF SUCH OPENINGS FOR THE ENTRANCE OF NEW EQUIPMENT INTO THE BUILDING OR FOR THE REMOVAL OF EXISTING EQUIPMENT IN THE EXISTING BUILDING SHALL BE PROVIDED BY THE CONTRACTOR.
10. NO CUTTING OF BUILDING CONSTRUCTION SHALL BE DONE WHICH MAY IN ANYWAY AFFECT THE BUILDING STRUCTURALLY OR ARCHITECTURALLY WITHOUT FIRST SECURING THE COR'S CONSENT AND APPROVAL.
11. NO CONDUITS SHALL BE RUN THROUGH OR SUPPORTED FROM DUCTWORK.
12. AFTER CONSTRUCTION OF NEW RENOVATED AREAS IS COMPLETED, THE CONTRACTOR SHALL LABEL REUSED AND EXISTING UNUSED CIRCUIT BREAKERS IN ALL ELECTRICAL PANELS INVOLVED. SPARES SHALL BE MARKED SPARES.
13. IT IS CALLED TO THE CONTRACTOR'S ATTENTION THAT THE ENTIRE INSTALLATION MUST BE GROUNDED IN COMPLIANCE WITH THE NATIONAL ELECTRICAL CODE. ALL DEVICES, EQUIPMENT BOXES, ETC. MUST BE CONNECTED TO A SOLID, INSULATED GREEN, COPPER GROUNDING CONDUCTOR. THIS GROUNDING CONDUCTOR MUST BE CONTINUOUS WITHOUT SPLICES FROM POINT OF ORIGIN IN PANELBOARD TO ALL BOXES AND EQUIPMENT ON EACH BRANCH CIRCUIT. VERIFY GROUNDING VALUES AND SUBMIT A TYPEWRITTEN REPORT TO THE RESIDENT ENGINEER INDICATING TESTING RESULTS OF EACH CIRCUIT AT THE COMPLETION OF THE PROJECT.
14. FURNISH, INSTALL, & PERFORM ANY & ALL NECESSARY WORK AND EQUIPMENT ON A TEMPORARY BASIS TO ASSURE UNINTERRUPTED SERVICE TO THE ELECTRICAL, FIRE ALARM, TELEPHONE AND SIGNAL/DATA SYSTEMS UNTIL NEW EQUIPMENT CAN BE INSTALLED ON A PERMANENT BASIS FOR THESE SYSTEMS. ALL OUTAGES MUST BE SCHEDULED WITH THE COR PRIOR TO ANY INTERRUPTIONS OF THESE SYSTEMS.
15. FOR SINGLE PHASE CIRCUITS, UNLESS NOTED OTHERWISE, NEW WIRING INDICATED SHALL BE 2 #12 & 1#12 GROUND IN 3/4" CONDUIT. FOR THREE PHASE CIRCUITS, UNLESS NOTED OTHERWISE, NEW WIRING INDICATED SHALL BE 3 #12 & 1 #12 GROUND IN 3/4"CONDUIT. FOR CIRCUITS THAT REQUIRE LONG TRAVEL DISTANCES, REFER TO VOLTAGE DROP NOTE BELOW.
16. THE CONTRACTOR SHALL FIRESTOP ALL EXISTING CONCEALED AND ACCESSIBLE CONDUITS WITHIN THE LIMITS OF THE CONTRACT WORK AREA. THE CONTRACTOR SHALL FIRESTOP ALL NEW AND EXISTING CONDUITS AS PART OF THE REMODELING AND EXISTING SYSTEMS TO REMAIN. (REFER TO SPECIFICATIONS)
17. THE CONTRACTOR SHALL PROVIDE AND INSTALL APPROVED FIRE STOPPING AT ALL NEW AND EXISTING FLOOR SLAB/CEILING AND WALL PENETRATIONS WITHIN THE LIMITS OF CONTRACT WORK AREA TO MAINTAIN THE FIRE RATED CONSTRUCTION.
18. THE CONTRACTOR IS RESPONSIBLE FOR PROVIDING ALL INTERIM LIFE SAFETY DEVICES WITHIN ALL ZONES OF CONSTRUCTION. DEVICES REQUIRED INCLUDE, BUT NOT LIMITED TO, EGRESS LIGHT FIXTURES, FIRE ALARM SYSTEM AREA SMOKE DETECTORS, FIRE ALARM SYSTEM AUDIO/VISUAL DEVICES. CONTRACTOR SHALL HAVE OPTION TO SALVAGE DEVICES DURING DEMOLITION PHASES TO USE AS INTERIM LIFE SAFETY DEVICES, BUT CONTRACTOR IS RESPONSIBLE FOR PROVIDING ALL DEVICES NECESSARY.

VOLTAGE DROP NOTE:
THE FOLLOWING LIST APPLIES TO ALL NEW BRANCH WIRING PROVIDED UNDER THIS CONTRACT. LISTS INDICATE THE NECESSARY GAUGE OF CONDUCTORS NECESSARY FOR BRANCH CIRCUITS ONE WAY FROM PANEL TO LAST OUTLET OR LIGHTING FIXTURE ON THE CIRCUIT:

120/208V CIRCUITS	WIRE SIZE	277V CIRCUITS
• 0 - 100 FEET	No. 12 AWG	0 - 150 FEET
• 101 - 250 FEET	No. 10 AWG	151 - 350 FEET
• 250 - 400 FEET	No. 8 AWG	351 - 500 FEET

FULLY SPRINKLERED
100% FINAL SUBMISSION

Revisions:	Date

CONSULTANTS:

COMMONWEALTH OF PENNSYLVANIA REGISTERED PROFESSIONAL ENGINEER TIMOTHY M. EAGHARY No. PE041283-E

ARCHITECT/ENGINEERS:

levelHEADS architects + integrators

H.F. LENZ COMPANY

Drawing Title: SYMBOLS, ABBREVIATIONS, AND NOTES

Approved:

Project Title: 5th Floor SAME DAY SURGERY RENOV. VA Medical Center

Location: Philadelphia, Pennsylvania

Date: 04.28.16 | Checked By: TME | Drawn By: RJD

Project Number: 642-11-120

Building Number: TWO

Drawing Number: ES001

Dwg. 39 of 61

Office of Construction and Facilities Management

Department of Veterans Affairs

VA FORM 08-6231

GENERAL NOTES - DEMOLITION

1. EXISTING EQUIPMENT, SUCH AS LIGHTING FIXTURES, WIRING DEVICES, CONDUITS, ETC., SHOWN ON PLANS TO BE REMOVED COMPLETELY. CUT/CAP CONDUITS AT THE AREA OF WORK PERIMETER AND REMOVE CONDUIT WITHIN THE WORK AREA. DISCONNECT WIRING AT THE OVERCURRENT PROTECTIVE DEVICE AND REMOVE WIRING COMPLETELY FROM THE ABANDONED CONDUITS.
2. REMOVE ALL ACCESSIBLE ABANDONED WIRING OF ALL TYPES, OR CAP AND LABEL IN JUNCTION BOX FOR RE-USE, IN COMPLIANCE WITH THE NATIONAL ELECTRIC CODE.

PHASING NOTES - DEMOLITION

1. ELECTRICAL CONTINUITY OF ALL EXISTING CIRCUITS IN LATER PHASES OF CONSTRUCTION MUST BE MAINTAIN. PROVIDE NEW/TEMPORARY WIRING AND RESTORE, IF INTERRUPTED, ALL CONDUITS AND CONDUCTORS PASSING THROUGH RENOVATED AREAS AND SERVICING UNDISTURBED AREAS.

KEYNOTES THIS DRAWING:

1. DEMOLISH FIXTURES INDICATED, BRANCH CONDUCTORS TO REMAIN FOR REUSE.

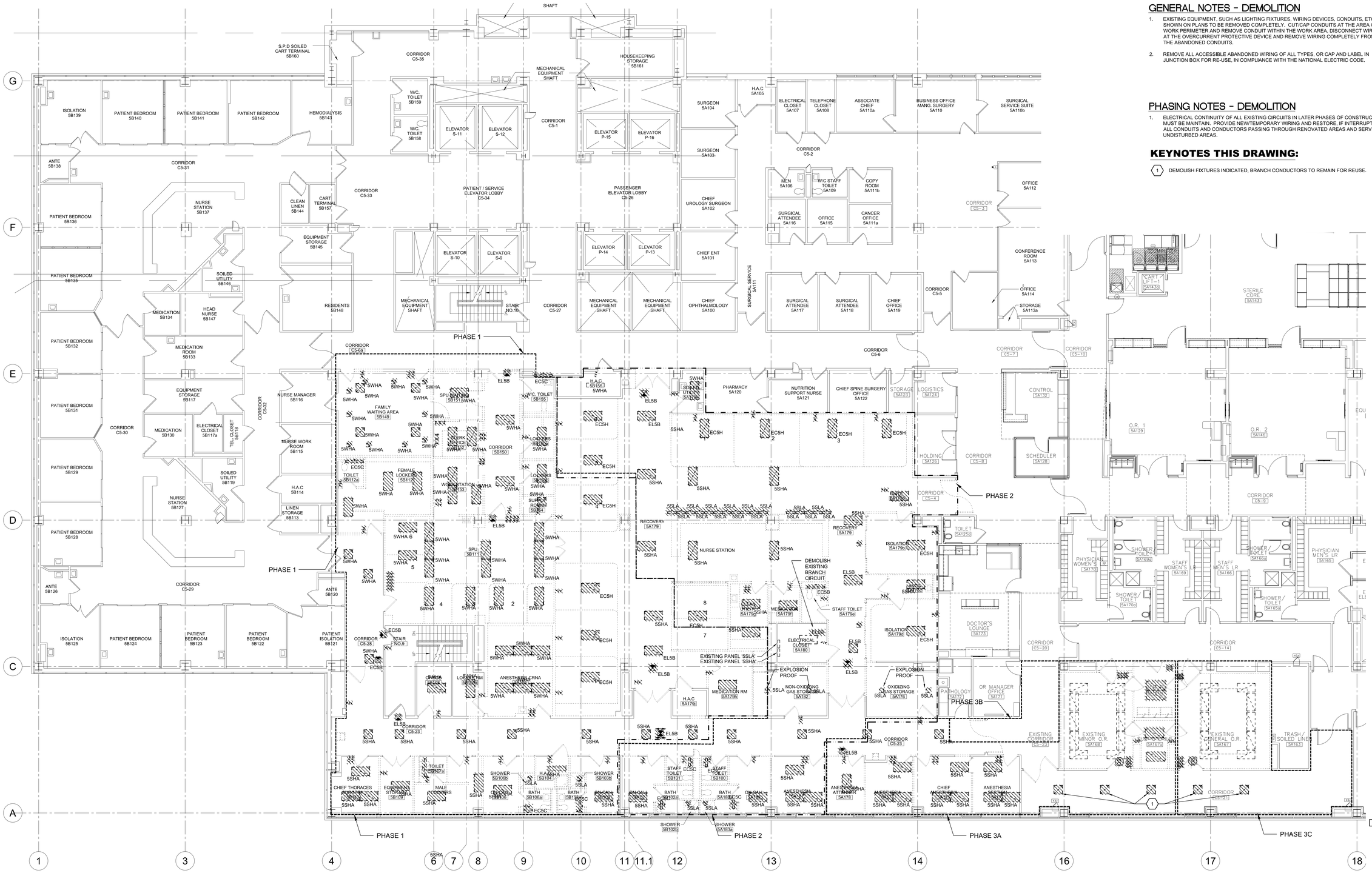

1 PARTIAL FIFTH FLOOR DEMOLITION PLAN - LIGHTING

Scale: 1/8" = 1'-0"

FULLY SPRINKLERED
100% FINAL SUBMISSION

Revisions:	Date

CONSULTANTS:

ARCHITECT/ENGINEERS:

levelHEADS architects + integrators

H.F. LENZ COMPANY

Drawing Title: FIFTH FLOOR ELECTRICAL DEMOLITION PLAN - LIGHTING

Approved:

Project Title: 5th Floor SAME DAY SURGERY RENOV. VA Medical Center

Location: Philadelphia, Pennsylvania

Date: 04.28.16 | Checked By: TME | Drawn By: RJD

Project Number: 642-11-120

Building Number: TWO

Drawing Number: ES101

Dwg. 40 of 61

Office of Construction and Facilities Management

Department of Veterans Affairs

VA FORM 08-6231

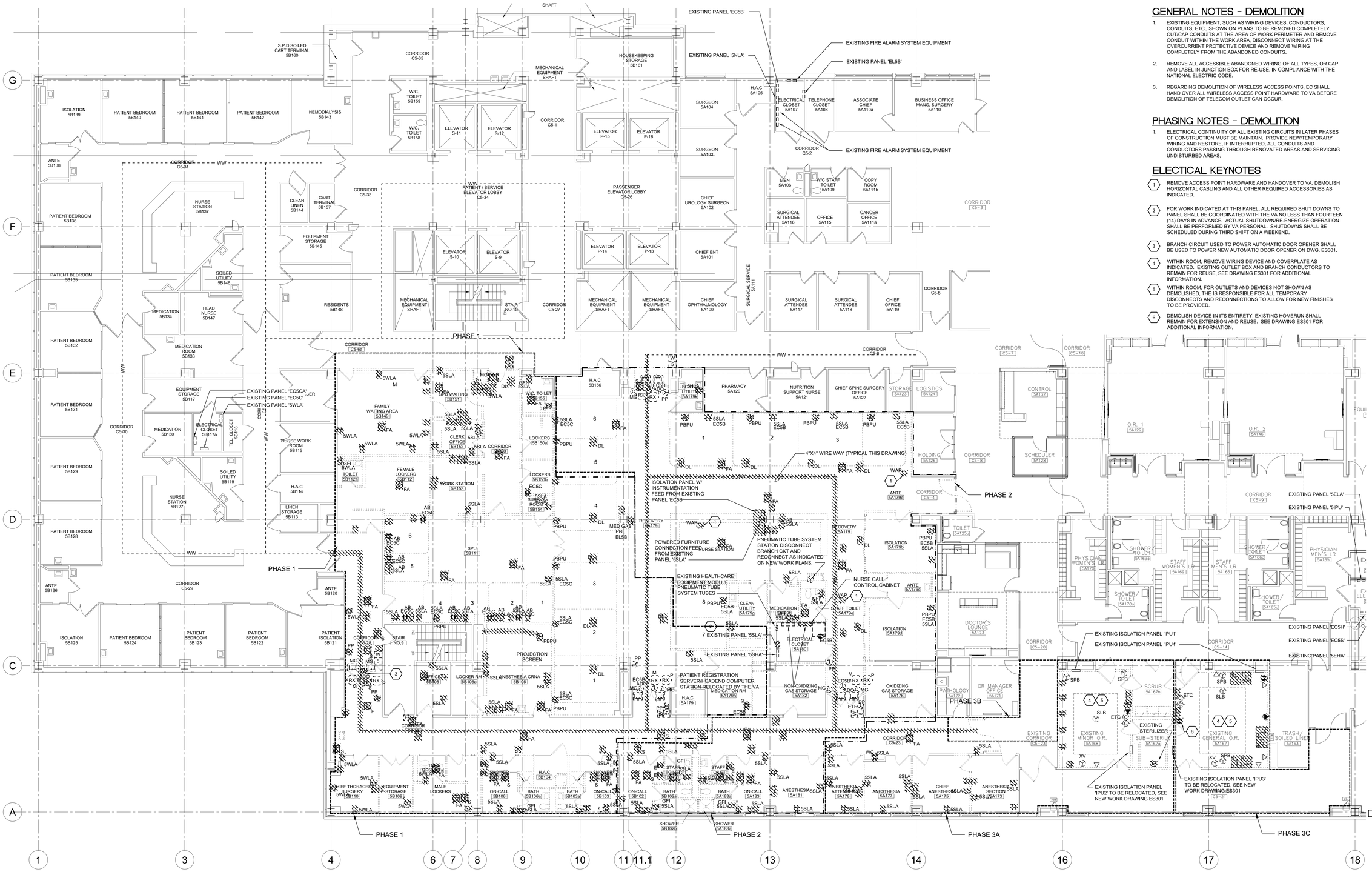

GENERAL NOTES - DEMOLITION

1. EXISTING EQUIPMENT, SUCH AS WIRING DEVICES, CONDUCTORS, CONDUITS, ETC., SHOWN ON PLANS TO BE REMOVED COMPLETELY. CUT/CAP CONDUITS AT THE AREA OF WORK PERIMETER AND REMOVE CONDUIT WITHIN THE WORK AREA. DISCONNECT WIRING AT THE OVERCURRENT PROTECTIVE DEVICE AND REMOVE WIRING COMPLETELY FROM THE ABANDONED CONDUITS.
2. REMOVE ALL ACCESSIBLE ABANDONED WIRING OF ALL TYPES, OR CAP AND LABEL IN JUNCTION BOX FOR RE-USE, IN COMPLIANCE WITH THE NATIONAL ELECTRIC CODE.
3. REGARDING DEMOLITION OF WIRELESS ACCESS POINTS, EC SHALL HAND OVER ALL WIRELESS ACCESS POINT HARDWARE TO VA BEFORE DEMOLITION OF TELECOM OUTLET CAN OCCUR.

PHASING NOTES - DEMOLITION

1. ELECTRICAL CONTINUITY OF ALL EXISTING CIRCUITS IN LATER PHASES OF CONSTRUCTION MUST BE MAINTAIN. PROVIDE NEW/TEMPORARY WIRING AND RESTORE. IF INTERRUPTED, ALL CONDUITS AND CONDUCTORS PASSING THROUGH RENOVATED AREAS AND SERVICING UNDISTURBED AREAS.

ELECTICAL KEYNOTES

1. REMOVE ACCESS POINT HARDWARE AND HANDOVER TO VA. DEMOLISH HORIZONTAL CABLING AND ALL OTHER REQUIRED ACCESSORIES AS INDICATED.
2. FOR WORK INDICATED AT THIS PANEL, ALL REQUIRED SHUT DOWNS TO PANEL SHALL BE COORDINATED WITH THE VA NO LESS THAN FOURTEEN (14) DAYS IN ADVANCE. ACTUAL SHUTDOWN/RE-ENERGIZE OPERATION SHALL BE PERFORMED BY VA PERSONAL. SHUTDOWNS SHALL BE SCHEDULED DURING THIRD SHIFT ON A WEEKEND.
3. BRANCH CIRCUIT USED TO POWER AUTOMATIC DOOR OPENER SHALL BE USED TO POWER NEW AUTOMATIC DOOR OPENER ON DWG. ES301.
4. WITHIN ROOM, REMOVE WIRING DEVICE AND COVERPLATE AS INDICATED. EXISTING OUTLET BOX AND BRANCH CONDUCTORS TO REMAIN FOR REUSE, SEE DRAWING ES301 FOR ADDITIONAL INFORMATION.
5. WITHIN ROOM, FOR OUTLETS AND DEVICES NOT SHOWN AS DEMOLISHED, THE IS RESPONSIBLE FOR ALL TEMPORARY DISCONNECTS AND RECONNECTIONS TO ALLOW FOR NEW FINISHES TO BE PROVIDED.
6. DEMOLISH DEVICE IN ITS ENTIRETY. EXISTING HOMERUN SHALL REMAIN FOR EXTENSION AND REUSE. SEE DRAWING ES301 FOR ADDITIONAL INFORMATION.

1 PARTIAL FIFTH FLOOR DEMOLITION PLAN - POWER & SIGNAL

Scale: 1/8" = 1'-0"

FULLY SPRINKLERED
100% FINAL SUBMISSION

Revisions:	Date

CONSULTANTS:

COMMONWEALTH OF PENNSYLVANIA
REGISTERED PROFESSIONAL ENGINEER
TIMOTHY M. EARHART
No. PE075054128745

ARCHITECT/ENGINEERS:

levelHEADS architects + integrators

H.F. LENZ COMPANY

Drawing Title: FIFTH FLOOR ELECTRICAL DEMOLITION PLAN - POWER & SIGNAL

Approved:

Project Title: 5th Floor SAME DAY SURGERY RENOV. VA Medical Center

Location: Philadelphia, Pennsylvania

Date: 04.28.16 | Checked By: TME | Drawn By: RJD

Project Number: 642-11-120

Building Number: TWO

Drawing Number: ES102

Dwg. 41 of 61

Office of Construction and Facilities Management

Department of Veterans Affairs

VA FORM 08-6231

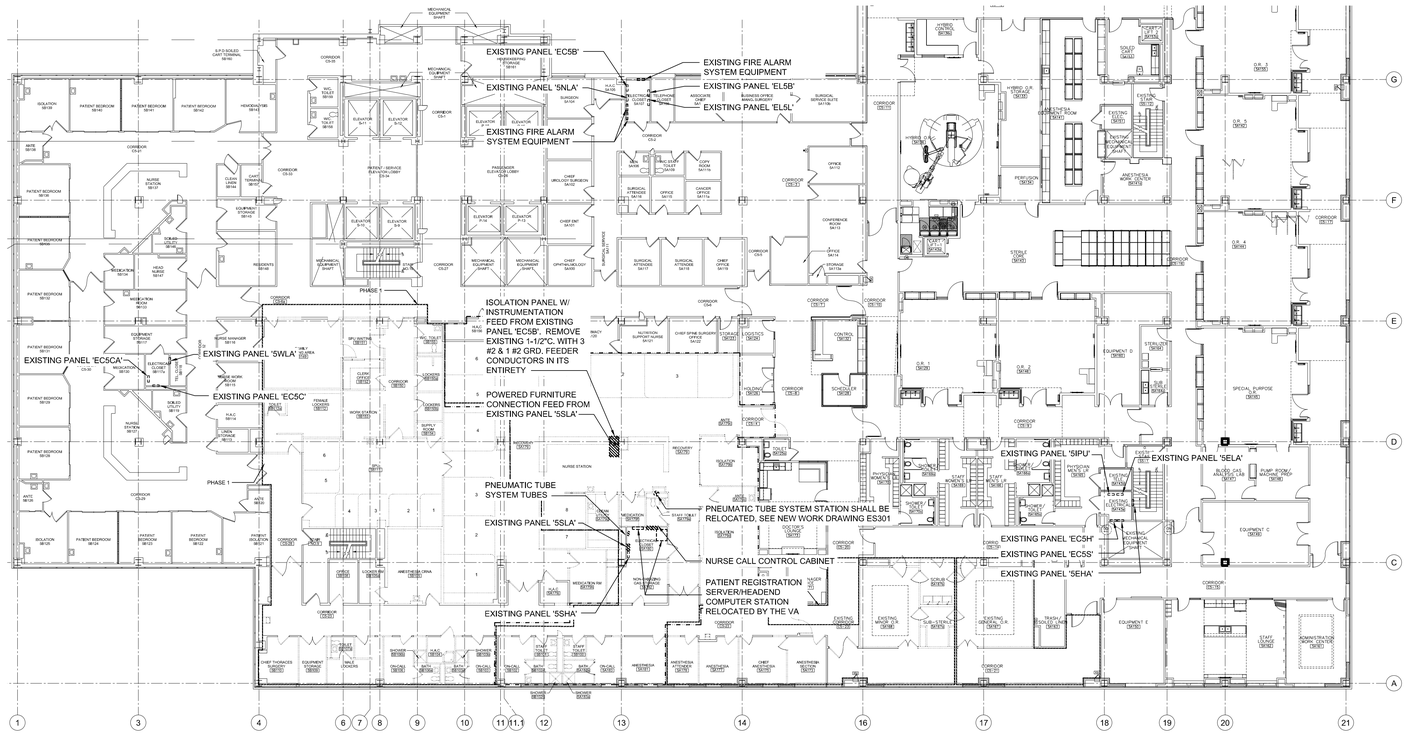

1 FIFTH FLOOR DEMOLITION PLAN - POWER & SIGNAL

Scale: 1/16" = 1'-0"

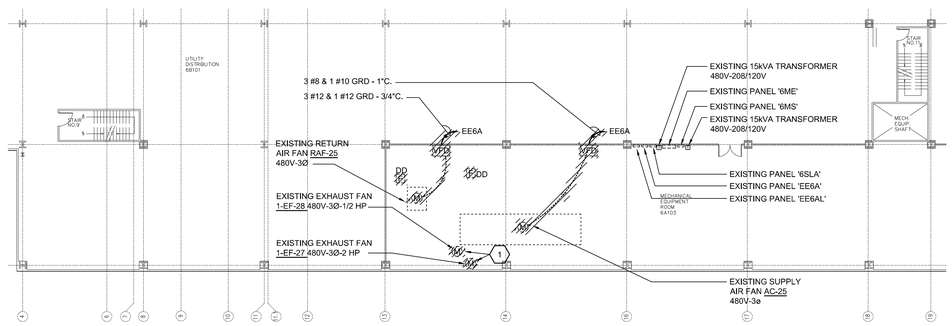

2 SIXTH FLOOR DEMOLITION PLAN - POWER & SIGNAL

Scale: 1/16" = 1'-0"

GENERAL NOTES - DEMOLITION

1. EXISTING EQUIPMENT, SUCH AS VARIABLE FREQUENCY DRIVES, WIRING DEVICES, CONDUITS, ETC., SHOWN ON PLANS TO BE REMOVED COMPLETELY. CUT/CAP CONDUITS AT THE AREA OF WORK PERIMETER AND REMOVE CONDUIT WITHIN THE WORK AREA. DISCONNECT WIRING AT THE OVERCURRENT PROTECTIVE DEVICE AND REMOVE WIRING COMPLETELY FROM THE ABANDONED CONDUITS.
2. REMOVE ALL ACCESSIBLE ABANDONED WIRING OF ALL TYPES, OR CAP AND LABEL IN JUNCTION BOX FOR RE-USE, IN COMPLIANCE WITH THE NATIONAL ELECTRIC CODE.

KEYNOTES:

1. DISCONNECT CONDUCTORS FROM EXHAUST FAN. CONDUCTORS SHALL BE REUSED ON NEW EXHAUST FAN. SEE DRAWING ES302.

KEY PLAN

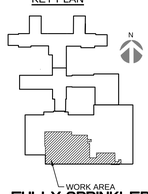

FULLY SPRINKLERED
100% FINAL SUBMISSION

Revisions:	Date

CONSULTANTS:

ARCHITECT/ENGINEERS:

levelHEADS architects + integrators

H.F. LENZ COMPANY

Drawing Title:	FIFTH AND SIXTH FLOOR ELECTRICAL PLANS
Approved:	
Project Title	5th Floor SAME DAY SURGERY RENOV. VA Medical Center
Location:	Philadelphia, Pennsylvania
Date:	04.28.16
Checked By:	TME
Drawn By:	RJD
Project Number:	642-11-120
Building Number:	TWO
Drawing Number:	ES103
Dwg.	42 of 61

Office of Construction and Facilities Management

Department of Veterans Affairs

VA FORM 08-6231

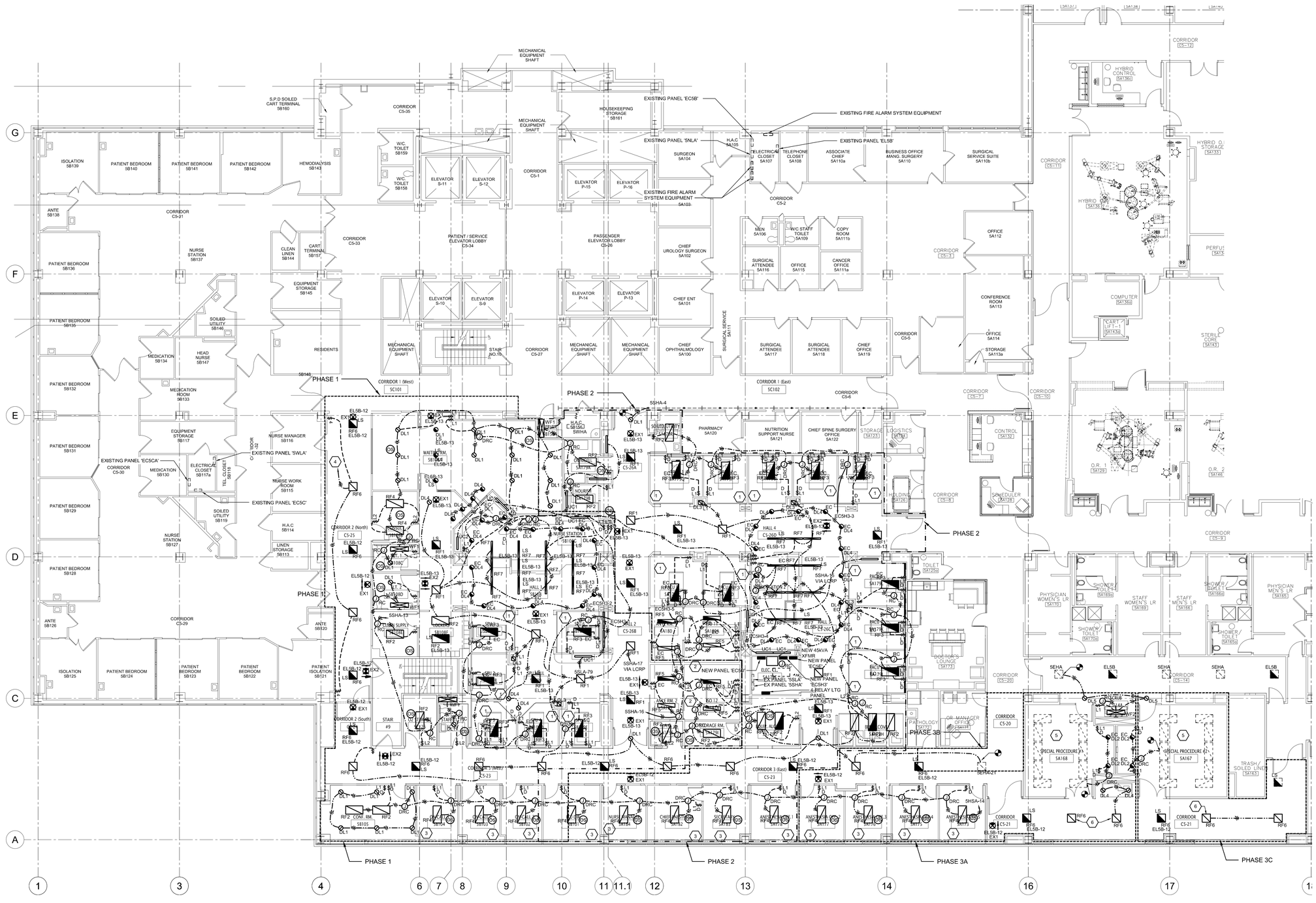

1 PARTIAL FIFTH FLOOR PLAN - LIGHTING

Scale: 1/8" = 1'-0"

KEYNOTES THIS DRAWING:

1. SINGLE BUTTON DIMMER SWITCH AT BAY ENTRANCE FOR AMBIENT PORTION OF LIGHT FIXTURE. DIMMER SWITCHES AT HEAD WALL FOR EXAM PORTION OF LIGHT FIXTURE SHALL BE PROVIDED WITHIN PATIENT BEDSIDE UNIT. COORDINATE WITH ARCHITECT AND PROVIDE SWITCH IN PREFABRICATED PATIENT BEDSIDE UNIT.
2. TWO BUTTON SWITCH AT ENTRANCE PROVIDES ON/OFF CONTROL OF NORMAL AND EMERGENCY CRITICAL FIXTURE RESPECTIVELY. DIMMER SWITCHES AT HEAD WALL FOR DIMMING OF FIXTURES SHALL BE PROVIDED WITHIN PATIENT BEDSIDE UNIT. COORDINATE WITH ARCHITECT AND PROVIDE SWITCH IN PREFABRICATED PATIENT BEDSIDE UNIT
3. SEE LIGHTING SCHEDULE FOR CONTROLS REQUIRED IN ROOM.
4. CONNECT TO EXISTING LIGHTING CIRCUIT IN WEST CORRIDOR 5C101. MODIFY EXISTING SWITCH LEG WIRING TO ACCOMMODATE NEW 4-WAY SWITCH.
5. CLEAN EXISTING SURGICAL FIXTURE IN-PLACE AND PROVIDE NEW LAMPS/BALLASTS, REMOVLA EXISTING LAMPS/BALLASTS FROM SITE. PROVIDE SIX (6) T8 LAMPS AND THREE BALLASTS AS SPECIFIED.
6. RECONNECT EXISTING BRANCH CIRCUITS TO NEW FIXTURE.

PHASING NOTES:

DUE TO THE PHASING OF THE PROJECT AND TO ALLOW FOR FUTURE PHASE WORK TO NOT DISTURBED FINISHED AREAS, THE FOLLOWING APPLIES.

PHASE 1 WORK

- PROVIDE ALL NEW ELECTRICAL EQUIPMENT INDICATED IN ELECTRICAL CLOSET.
- ALL BRANCH CIRCUITS REQUIRED FOR PHASE 1 SHALL ENTER CONSTRUCTION ZONE VIA SOUTHWEST PORTION OF THE ELECTRIC ROOM.

PHASE 2 WORK

- BRANCH CIRCUITS SHALL ENTER PHASE 2 CONSTRUCTION ZONE FROM ANY PORTION OF THE ELECTRICAL ROOM EXCEPT FOR THE SOUTHWEST PORTION.
- NO PHASE 2 WORK IS REQUIRED TO PASS THROUGH PHASE 1 WORK AREA
- CONDUITS FOR PHASE 3 SHALL BE EXTENDED TO THE LIMIT OF PHASE 2 AND PHASE 3 TO ALLOW FOR EXTENSION OF CONDUITS IN PHASE 3. CONTRACTOR IS RESPONSIBLE FOR CALCULATING EXACT NUMBER OF CONDUITS REQUIRED FOR PHASE 3.

PHASE 3 WORK

- PHASE BROKEN INTO THREE SUB-PHASES, 3A, 3B, AND 3C. DURING PHASE 3A, CONDUITS FOR PHASE 3B AND 3C SHALL BE EXTENDED TO THE LIMIT OF PHASE 3A. DURING PHASE 3B, CONDUITS FOR PHASE 3C SHALL BE EXTENDED TO THE LIMIT OF PHASE 3B. CONTRACTOR IS RESPONSIBLE FOR CALCULATING EXACT NUMBER OF CONDUITS REQUIRED THROUGHOUT PHASE.
- NO PHASE 3 WORK IS REQUIRED TO PASS THROUGH PHASE 1 OR 2 WORK AREAS

KEY PLAN

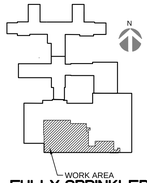

FULLY SPRINKLERED
100% FINAL SUBMISSION

Revisions:	Date

CONSULTANTS:

COMMONWEALTH OF PENNSYLVANIA
REGISTERED PROFESSIONAL ENGINEER
TIMOTHY M. EASTHARRY
No. PE041283-E

ARCHITECT/ENGINEERS:

levelHEADS architects + integrators

H.F. LENZ COMPANY

Drawing Title: PARTIAL FIFTH FLOOR ELECTRICAL PLAN - LIGHTING

Approved:

Project Title: 5th Floor SAME DAY SURGERY RENOV. VA Medical Center

Location: Philadelphia, Pennsylvania

Date: 04.28.16 | Checked By: TME | Drawn By: RJD

Project Number: 642-11-120

Building Number: TWO

Drawing Number: ES201

Dwg. 43 of 61

Office of Construction and Facilities Management

Department of Veterans Affairs

VA FORM 08-6231

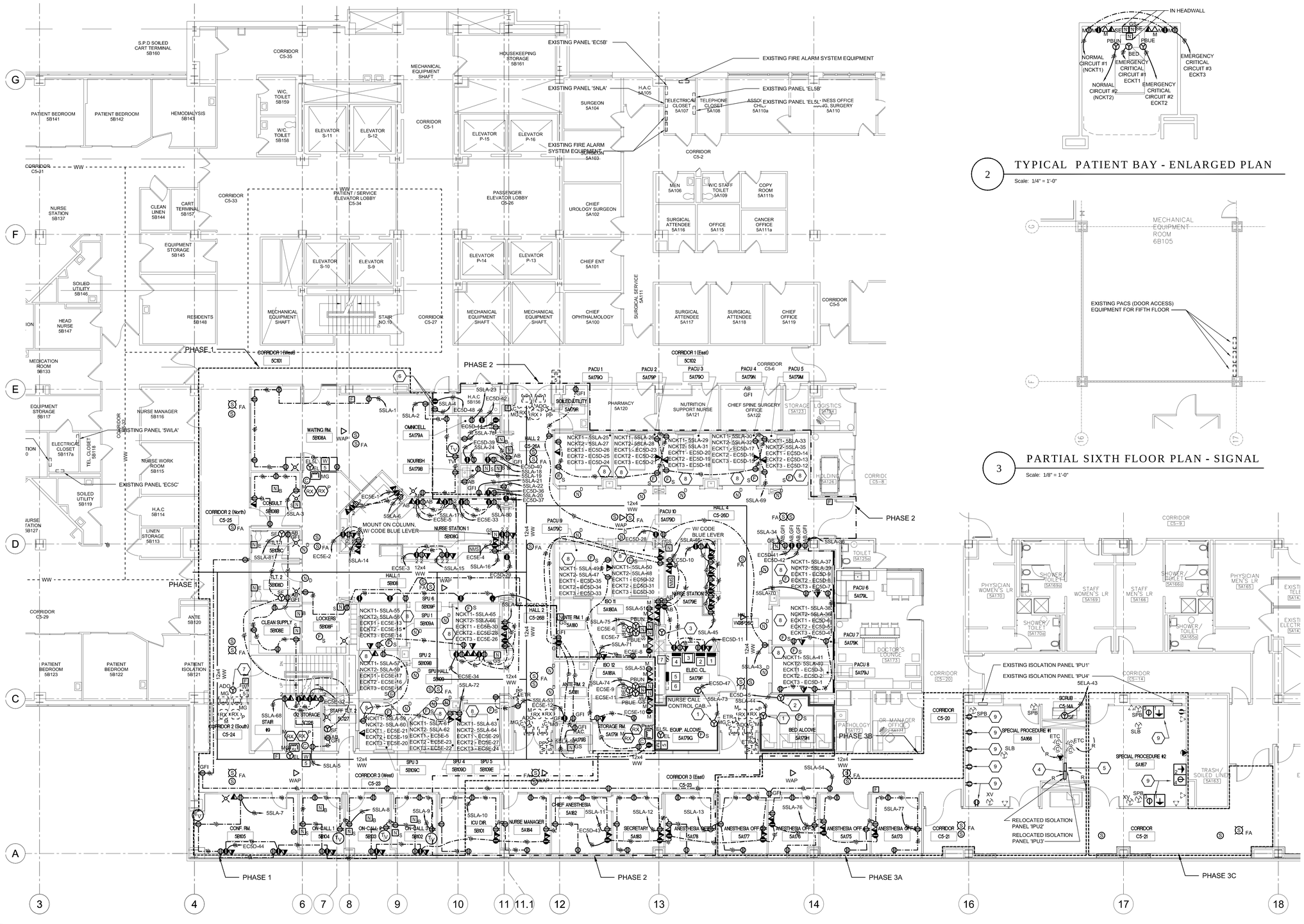

1 PARTIAL FIFTH FLOOR PLAN - POWER & SIGNAL

Scale: 1/8" = 1'-0"

2 TYPICAL PATIENT BAY - ENLARGED PLAN

Scale: 1/4" = 1'-0"

3 PARTIAL SIXTH FLOOR PLAN - SIGNAL

Scale: 1/8" = 1'-0"

PHASING NOTES:

DUE TO THE PHASING OF THE PROJECT AND TO ALLOW FOR FUTURE PHASE WORK TO NOT DISTURBED FINISHED AREAS, THE FOLLOWING APPLIES.

PHASE 1 WORK

- PROVIDE ALL NEW ELECTRICAL EQUIPMENT INDICATED IN ELECTRICAL CLOSET.
- ALL BRANCH CIRCUITS REQUIRED FOR PHASE 1 SHALL ENTER CONSTRUCTION ZONE VIA SOUTHWEST PORTION OF THE ELECTRIC ROOM.

PHASE 2 WORK

- BRANCH CIRCUITS SHALL ENTER PHASE 2 CONSTRUCTION ZONE FROM ANY PORTION OF THE ELECTRICAL ROOM EXCEPT FOR THE SOUTHWEST PORTION.
- NO PHASE 2 WORK IS REQUIRED TO PASS THROUGH PHASE 1 WORK AREA
- CONDUITS FOR PHASE 3 SHALL BE EXTENDED TO THE LIMIT OF PHASE 2 AND PHASE 3 TO ALLOW FOR EXTENSION OF CONDUITS IN PHASE 3. CONTRACTOR IS RESPONSIBLE FOR CALCULATING EXACT NUMBER OF CONDUITS REQUIRED FOR PHASE 3.

PHASE 3 WORK

- PHASE BROKEN INTO THREE SUB-PHASES, 3A, 3B, AND 3C. DURING PHASE 3A, CONDUITS FOR PHASE 3B AND 3C SHALL BE EXTENDED TO THE LIMIT OF PHASE 3A. DURING PHASE 3B, CONDUITS FOR PHASE 3C SHALL BE EXTENDED TO THE LIMIT OF PHASE 3B. CONTRACTOR IS RESPONSIBLE FOR CALCULATING EXACT NUMBER OF CONDUITS REQUIRED THROUGHOUT PHASE.
- NO PHASE 3 WORK IS REQUIRED TO PASS THROUGH PHASE 1 OR 2 WORK AREAS

ELECTRIC ROOM 5A123 PANEL LEGEND:

1	NEW PANEL 'EC5E'
2	NEW PANEL 'EC5H3'
3	NEW 45kVA TRANSFORMER, 480V-208/120V
4	NEW PANEL 'EC5D'
5	NEW PANEL 'SSLA'
6	EXISTING PANEL 'SSHA'
7	PNEUMATIC TUBE SYSTEM TUBES

KEYNOTES THIS DRAWING:

1	FINAL CONNECTION TO POWERED RACEWAY MOUNTED 18" AFF.
2	FINAL CONNECTION TO POWERED RACEWAY MOUNTED 54" AFF.
3	RELOCATE AND RECONNECT EXISTING PNEUMATIC TUBE STATION IN NEW LOCATION SHOWN. SEE DWG ES102 FOR ORIGINAL LOCATION
4	EXTEND FOUR (4) EXISTING BRANCH CIRCUITS (3 #12 - XHHW-2) FROM EXISTING PANEL LOCATIONS TO RELOCATED PANEL LOCATION.
5	EXTEND TEN (10) EXISTING BRANCH CIRCUITS (3 #12 - XHHW-2) FROM EXISTING PANEL LOCATIONS TO RELOCATED PANEL LOCATION.
6	FOR RELOCATED PATIENT MONITORING SERVER (SERVER RELOCATED BY VA). FINAL LOCATION OF DEVICES SHALL BE DETERMINED BY FINAL SERVER PLACEMENT, COORDINATE WITH VA.
7	RECONNECT EXISTING BRANCH CIRCUIT TO NEW AUTOMATIC DOOR OPENER.
8	REFER TO ARCHITECT EQUIPMENT PLAN AND COORDINATE FINAL LOCATION OF RECEP/TELECOM OUTLETS W/ EQUIPMENT SHOWN.
9	WHERE DEVICE WAS DEMOLISHED, PROVIDE NEW DEVICE INDICATED, CONNECT EXISTING CONDUCTORS TO NEW DEVICE.

KEY PLAN

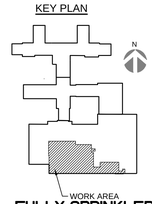

FULLY SPRINKLERED
100% FINAL SUBMISSION

Revisions	Date

CONSULTANTS:

ARCHITECT/ENGINEERS:

levelHEADS architects + integrators

H.F. LENZ COMPANY

COMMONWEALTH OF PENNSYLVANIA REGISTERED PROFESSIONAL ENGINEER TIMOTHY M. EASTWAY

Drawing Title: PARTIAL FIFTH FLOOR ELECTRICAL PLAN - POWER AND SIGNAL

Approved:

Project Title: 5th Floor SAME DAY SURGERY RENOV. VA Medical Center

Location: Philadelphia, Pennsylvania

Date: 04.28.16 | Checked By: TME | Drawn By: RJD

Project Number: 642-11-120

Building Number: TWO

Drawing Number: ES301

Dwg. 44 of 61

Office of Construction and Facilities Management

Department of Veterans Affairs

VA FORM 08-6231

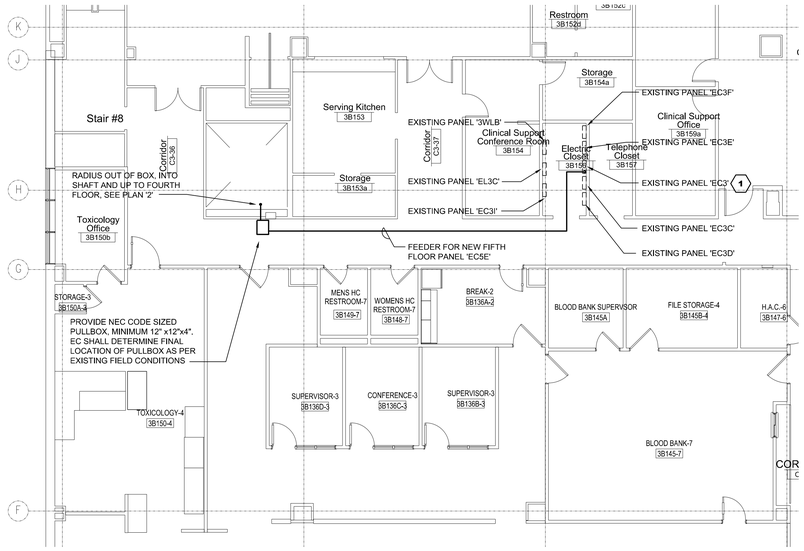

1 PARTIAL THIRD FLOOR PLAN - POWER

Scale: 1/8" = 1'-0"

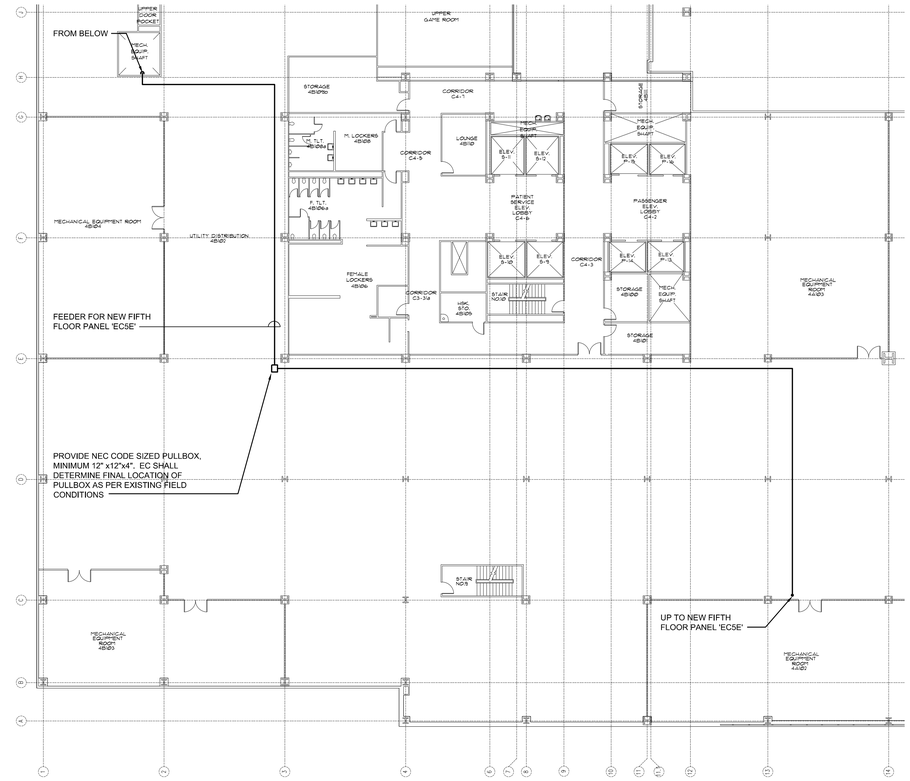

2 PARTIAL FOURTH FLOOR PLAN - POWER

Scale: 1/16" = 1'-0"

KEYNOTES THIS DRAWING:

1. FOR WORK INDICATED AT THIS PANEL, ALL REQUIRED SHUT DOWNS TO PANEL SHALL BE COORDINATED WITH THE VA NO LESS THAN FOURTEEN (14) DAYS IN ADVANCE. ACTUAL SHUTDOWN/RE-ENERGIZE OPERATION SHALL BE PERFORMED BY VA PERSONAL. SHUTDOWNS SHALL BE SCHEDULED DURING THIRD SHIFT ON A WEEKEND.

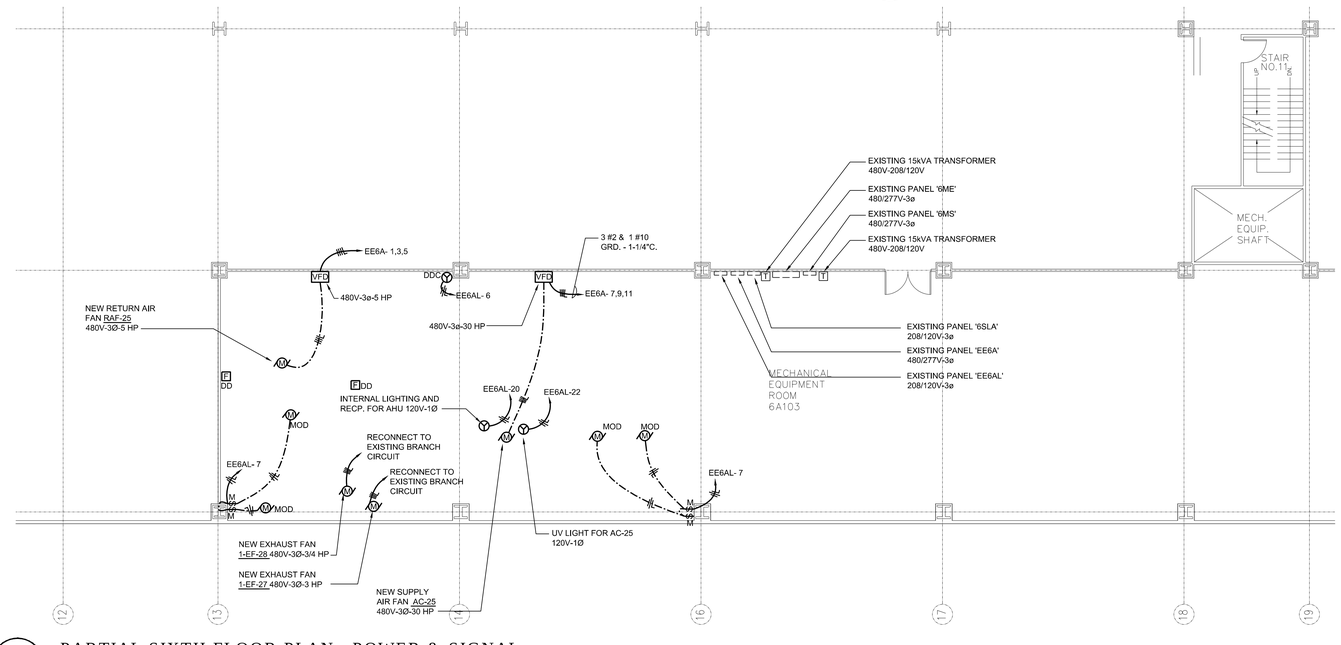

4 PARTIAL SIXTH FLOOR PLAN - POWER & SIGNAL

Scale: 1/8" = 1'-0"

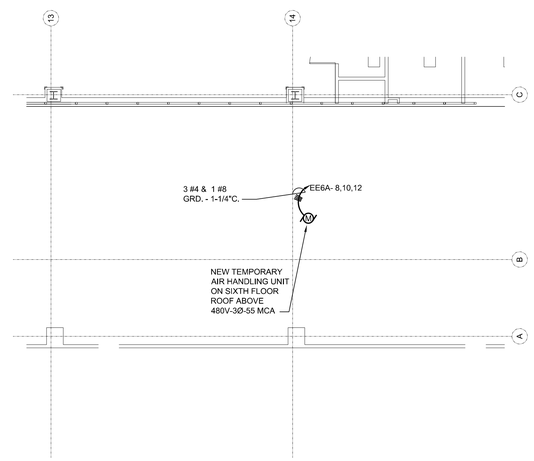

5 PARTIAL ROOF PLAN - POWER

Scale: 1/8" = 1'-0"

KEY PLAN

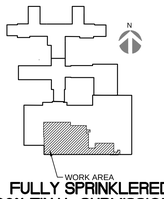

FULLY SPRINKLERED
100% FINAL SUBMISSION

Revisions:	Date

CONSULTANTS:

COMMONWEALTH OF PENNSYLVANIA REGISTERED PROFESSIONAL ENGINEER TIMOTHY M. EARHART No. PE-041852-E

ARCHITECT/ENGINEERS:

levelHEADS architects + integrators

H.F. LENZ COMPANY

Drawing Title: PARTIAL ELECTRICAL FLOOR PLANS POWER & SIGNAL

Approved:

Project Title: 5th Floor SAME DAY SURGERY RENOV. VA Medical Center

Location: Philadelphia, Pennsylvania

Date: 04.28.16 | Checked By: TME | Drawn By: RJD

Project Number: 642-11-120

Building Number: TWO

Drawing Number: ES302

Dwg. 45 of 61

Office of Construction and Facilities Management

Department of Veterans Affairs

VA FORM 08-6231

KEYNOTES THIS DRAWING:

1. FOR WORK INDICATED AT THIS PANEL, ALL REQUIRED SHUT DOWNS TO PANEL SHALL BE COORDINATED WITH THE VA NO LESS THAN FOURTEEN (14) DAYS IN ADVANCE. ACTUAL SHUTDOWN/RE-ENERGIZE OPERATION SHALL BE PERFORMED BY VA PERSONAL. SHUTDOWNS SHALL BE SCHEDULED DURING THIRD SHIFT ON A WEEKEND.

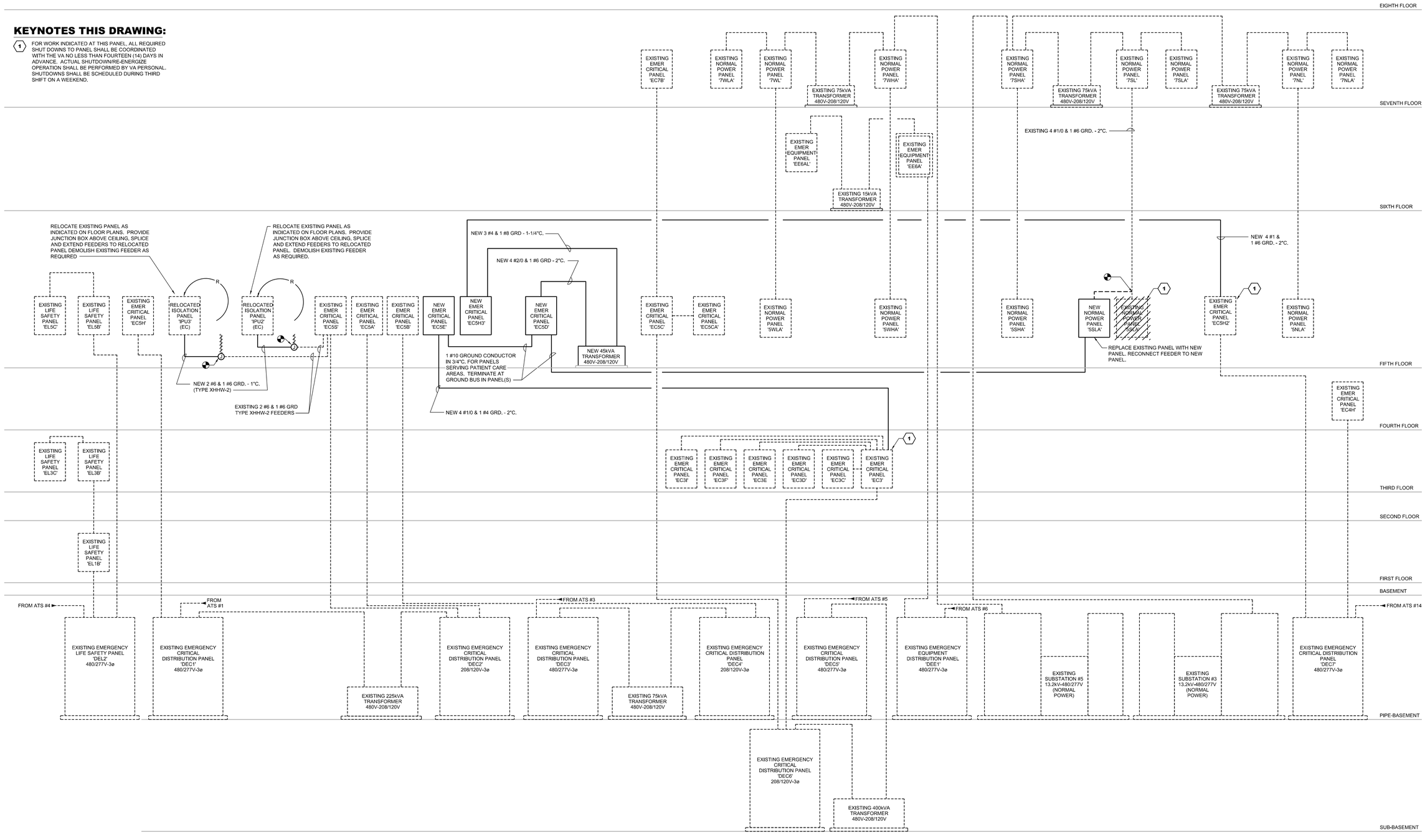

1 PARTIAL ELECTRICAL RISER DIAGRAM

No Scale

FULLY SPRINKLERED
100% FINAL SUBMISSION

Revisions:	Date

CONSULTANTS:

COMMONWEALTH OF PENNSYLVANIA — PROFESSIONAL ENGINEER — TIMOTHY M. EADHART — No. PE041283-E

ARCHITECT/ENGINEERS:

levelHEADS architects + integrators

H.F. LENZ COMPANY

Drawing Title: ELECTRICAL POWER RISER DIAGRAM

Approved:

Project Title: 5th Floor SAME DAY SURGERY RENOV. VA Medical Center

Location: Philadelphia, Pennsylvania

Date: 04.28.16 | Checked By: TME | Drawn By: RJD

Project Number: 642-11-120

Building Number: TWO

Drawing Number: ES501

Dwg. 46 of 61

Office of Construction and Facilities Management

Department of Veterans Affairs

VA FORM 08-6231

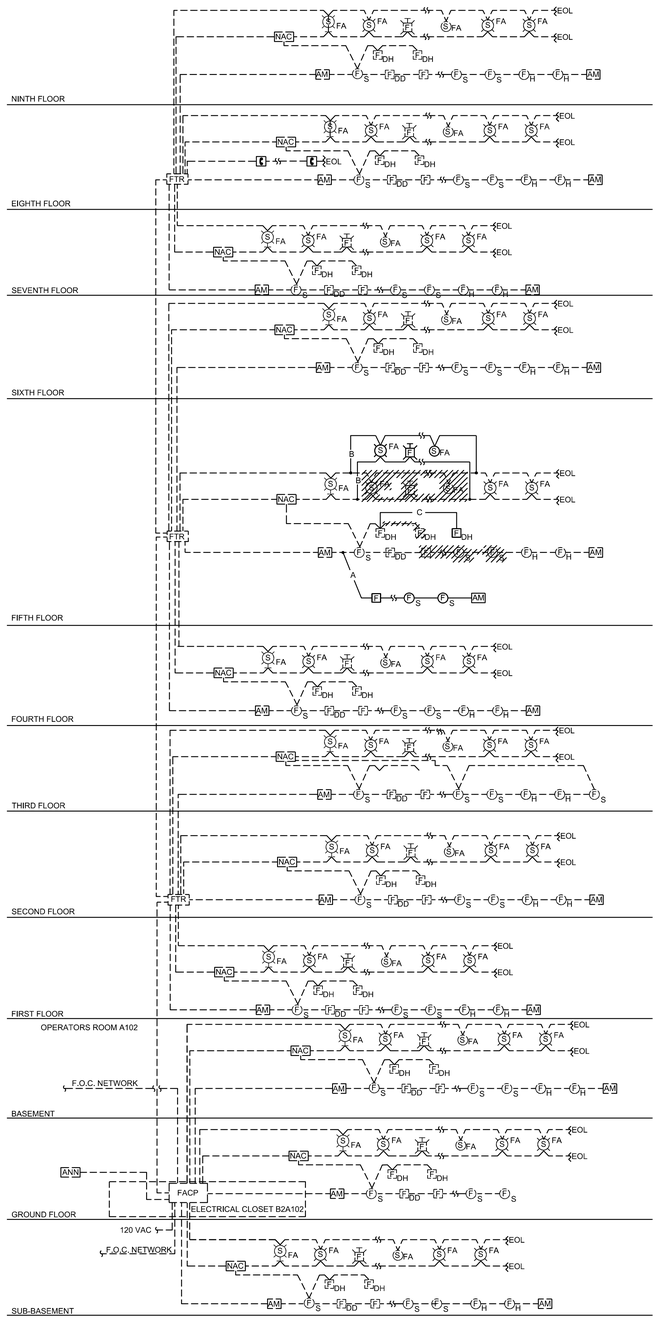

1 FIRE ALARM RISER DIAGRAM

Not To Scale

FIRE ALARM SYSTEM NOTES:

1. UNO, ALL SYSTEM WIRE SHOWN IS EXISTING. SCOPE OF WORK INCLUDES, BUT NOT LIMITED TOO, NEW DEVICES/WIRING ADDED INTO EXISTING SYSTEM AND SYSTEM REPROGRAMMING REQUIRED. SEE SPECIFICATIONS FOR ADDITIONAL INFORMATION.
2. BEFORE DEMOLITION OF ANY PART OF THE FIRE ALARM SYSTEM IS TO OCCUR, THE CONTRACTOR SHALL PROVIDE ANY PERMANENT AND/OR TEMPORARY FIRE ALARM WIRING THAT WILL BE REQUIRED TO ALLOW FOR THE FIRE ALARM SYSTEM ON THE FIFTH FLOOR TO REMAIN 100% OPERATION DURING CONSTRUCTION.
3. COORDINATE ALL SHUT DOWNS WITH VA COR. PROVIDE VA WITH MINIMUM SEVEN (7), WORKING DAYS, NOTICE PRIOR TO SHUTDOWN.
4. DEMOLISH DEVICES AS INDICATED FROM EXISTING FIRE ALARM CIRCUITS, EC SHALL MAINTAIN CONTINUITY OF EXISTING CIRCUIT DURING ALL PHASES OF WORK.
5. NEW DEVICES SHALL CONNECT TO EXISTING FIRE ALARM CIRCUITS. PROVIDE JUNCTION BOX AND SPLICE AS REQUIRED.
6. DIAGRAM DEPICTS HOW SYSTEM IS TYPICALLY WIRED, REFER TO FLOOR PLANS FOR QUANTITY AND LOCATION OF DEVICES REQUIRED.

WIRE AND CONDUIT LEGEND

— A —	1 #18 (TWISTED/SHIELDED PAIR)-1/2"C
— B —	2 #12 (THHN)-1/2"C
— C —	2 #14 (THHN)-1/2"C
— D —	4 #14 (THHN)-1/2"C
AM	ADDRESSIBLE INPUT MODULE (IAM)
~W~	END OF LINE RESISTOR (EOL)
NAC	VISUAL NOTIFICATION SIGNAL AMPLIFIER PANEL

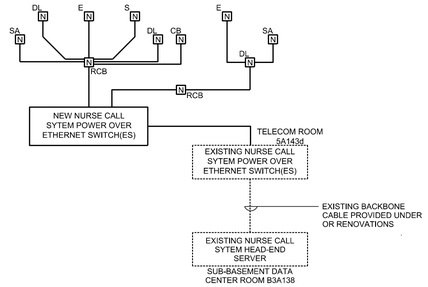

NOTES:

1. ALL WIRING SHALL BE CAT 6 (UNO) INSTALLED IN MIN 3/4"C. CABLING SHALL NOT BE RUN IN CABLE TRAY SYSTEM.
2. HOMERUNS SHALL NOT EXCEED 320' IN LENGTH.
3. DIAGRAM IS TO ILLUSTRATE HOW DEVICES ARE TYPICALLY WIRED, REFER TO FLOOR PLANS FOR QUANTITIES AND LOCATIONS. CABLE TYPES CALLED OUT ARE FOR BIDDING PURPOSES ONLY. EC SHALL
4. PROVIDE MANUFACTURED RECOMMENDED WIRING TO ALL NURSE SYSTEM DEVICE LOCATIONS.
5. ALL ROOM CONTROL BOARDS SHALL BE PROVIDED ABOVE CEILING IN METALLIC OUTLET BOX.
6. PROVIDE QUANTITY OF PoE SWITCHES AS REQUIRED TO SUPPLY POWER TO THE ENTIRE SYSTEM.
7. PROVIDE WALL MOUNTED RACK TO HOUSE NURSE CALL POE SWITCHES WHERE NEW EQUIPMENT IS INDICATED ON THE FLOOR PLANS.
8. ALONG WITH LOCAL ANNUCIATION AT ROOM LOCATION VIA CEILING MOUNTED DOME LIGHT, ALL CODE BLUE, PATIENT AND STAFF EMERGENCY CALLS PLACED WITHIN THE NEW FIFTH FLOOR NURSE CALL SYSTEM SHALL REPORTED TO, AND BE MANAGED AT, THE NURSE MASTER STATIONS. NOTIFICATIONS SHALL BE SENT TO ALL STAFF/DUTY AND DUTY STATIONS ON THE FLOOR. AUDIO COMMUNCIATIONS SHALL BE POSSIBLE BEWTWEEN NURSE CALL MASTER STATION AND ALL STAFF/DUTY STATIONS THROUGHOUT THE FIFTH FLOOR.

2 NURSE CALL SINGLE LINE DIAGRAM

Not To Scale

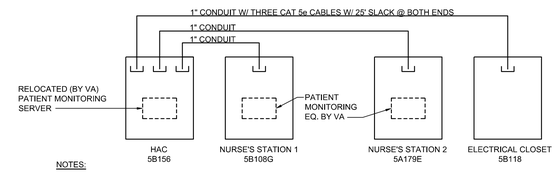

NOTES:

1. UNLESS NOTED OTHERWISE ALL CONDUITS SHALL BE PROVIDED WITH PULLCORDS.
2. CONDUITS SHALL PENETRATE ROOMS INDICATED ABOVE CEILINGS IF APPLICABLE , EXTEND 6" INTO ROOM CAP W/ INSULATED BUSHING.

3 PATIENT MONITORING RACEWAY

Not To Scale

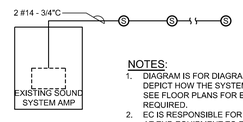

NOTES:

1. DIAGRAM IS FOR DIAGRAMMATICAL PURPOSES ONLY TO DEPICT HOW THE SYSTEM IS TO BE TYPICALLY WIRED. SEE FLOOR PLANS FOR EXACT AMOUNT OF DEVICES REQUIRED.
2. EC IS RESPONSIBLE FOR ALL ADJUSTMENTS REQUIRED AT END EQUIPMENT TO ENSURE SYSTEM IS 100% OPERATIONAL.

4 SOUND SYSTEM SINGLE LINE DIAGRAM

Not To Scale

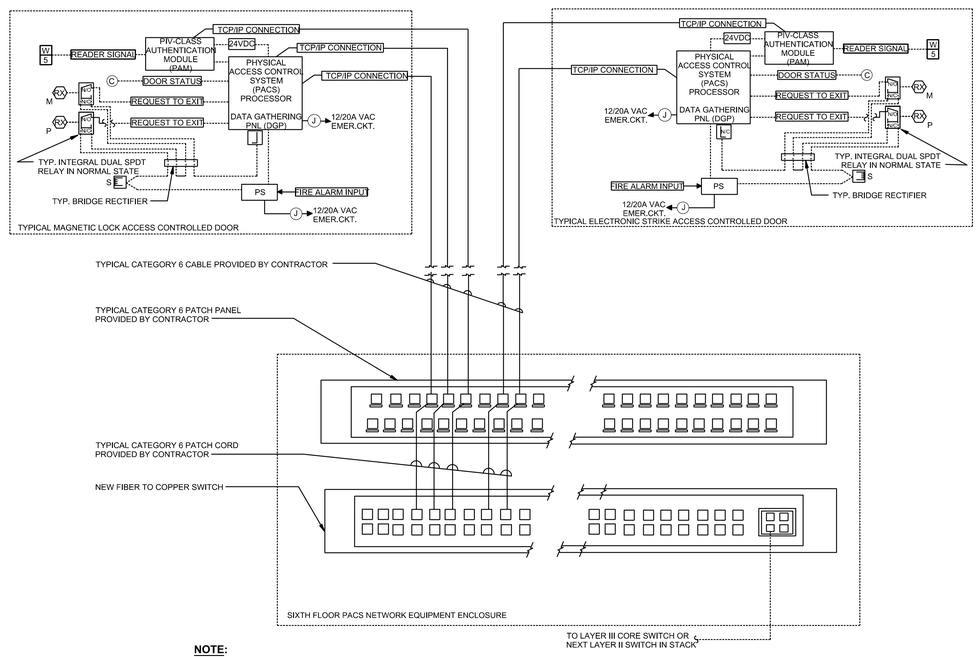

NOTE:

THIS RISER IS DIAGRAMMATIC ONLY AND HAS BEEN PROVIDED TO INDICATE THE GENERAL CONNECTIVITY. THE CONTRACTOR SHALL PROVIDE ALL REQUIRED EQUIPMENT, DEVICES, OUTLETS, ETC TO PROVIDE A 100% FULLY OPERATIONAL SYSTEM AS DETAILED ON THE CONSTRUCTION DOCUMENTS AND SPECIFICATIONS

5 PACS SECURE DOOR WIRING DIAGRAM

Not To Scale

FULLY SPRINKLERED
100% FINAL SUBMISSION

Revisions:	Date

CONSULTANTS:

COMMONWEALTH OF PENNSYLVANIA REGISTERED PROFESSIONAL ENGINEER TIMOTHY M. EAGHART No. PE-041383-E

ARCHITECT/ENGINEERS:

levelHEADS architects + integrators

H.F. LENZ COMPANY

Drawing Title: ELECTRICAL DIAGRAMS - LOW VOLTAGE SYSTEMS

Approved:

Project Title: 5th Floor SAME DAY SURGERY RENOV. VA Medical Center

Location: Philadelphia, Pennsylvania

Date: 04.28.16 | Checked By: TME | Drawn By: RJD

Project Number: 642-11-120

Building Number: TWO

Drawing Number: ES502

Dwg. 47 of 61

Office of Construction and Facilities Management

Department of Veterans Affairs

VA FORM 08-6231

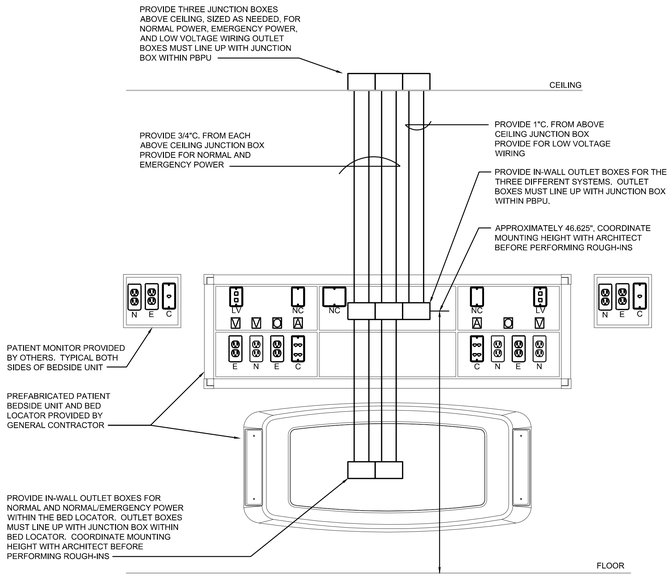

GENERAL NOTES FOR PBPU:

1. DIMENSIONS SHOWN ARE FOR BIDDING PURPOSES ONLY. CONFIRM FINAL MOUNTING HEIGHTS IN FIELD WITH FINAL PBPU LOCATION.
2. FOR EMERGENCY CRITICAL CIRCUIT, COLOR CODED AND/OR TAG WIRES TO IDENTIFY CIRCUITS WHEN MORE THAN ONE "PBPU" CONNECTED TO SAME HOMERUN AS INDICATED ON THE PLANS.
3. FOR NORMAL CIRCUIT, COLOR CODED AND OR TAG WIRES TO IDENTIFY CIRCUITS WHEN MORE THAN ONE "PBPU" IS CONNECTED TO SAME HOMERUN AS INDICATED ON THE PLANS.
4. CONTRACTOR SHALL PROVIDE NORMAL AND EMERGENCY CONDUCTORS FROM THE HOSPITALS POWER SYSTEM TO THE OUTLET BOXES PROVIDED AT THE PBPU. CONNECTIONS TO THE PBPU RECEPTACLES SHALL BE PERFORMED IN THIS JUNCTION BOX.
5. IT IS BROUGHT TO THE CONTRACTORS ATTENTION THAT DURING CONDUIT INSTALLATION TO THE PBPU IF FIELD CONDUIT CONNECTORS ARE INSTALLED IN THE CONCENTRIC KNOCKOUTS THAT IMPAIR ELECTRICAL CONNECTION OF THE RACEWAY SYSTEM TO THE GROUND TERMINAL STRIP IN THE PBPU, THE CONTRACTOR SHALL PROVIDE 1 #10 GROUND JUMPERS FROM THE GROUND TERMINAL STRIP TO THE GROUND BUSHINGS ON THE CONDUIT CONNECTORS.
6. AT LOW VOLTAGE SWITCHES, THE TOP BUTTONS SHALL CONTROL ONE OF THE TWO BALLASTS IN THE ABOVE PATIENT LIGHT FIXTURES, THE BOTTOM BUTTONS SHALL CONTROL THE SECOND BALLAST.

LEGEND

E	DUPLEX RECEPTACLE CONNECTED TO EMERGENCY POWER SYSTEM
N	DUPLEX RECEPTACLE CONNECTED TO THE NORMAL POWER SYSTEM
C	DATA AND VOICE COMMUNICATIONS OUTLET
NC	NURSE CALL SYSTEM OUTLET
LV	TWO BUTTON, MOMENTARY CONTACT, LOW VOLTAGE PUSH BUTTON SWITCH.
O, A, V	MEDICAL GAS OUTLET

1 TYPICAL PREFABRICATED BEDSIDE PATIENT UNIT (PBPU) DETAIL

NOT TO SCALE

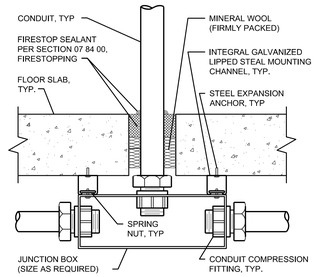

2 FLOOR SLAB PENETRATION DETAIL

NOT TO SCALE

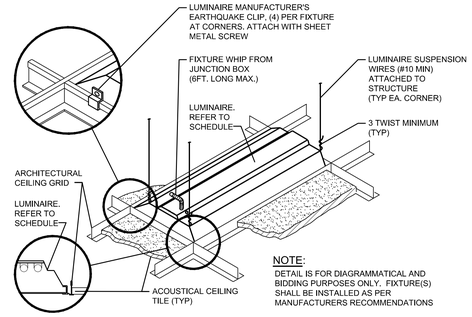

NOTE:
DETAIL IS FOR DIAGRAMMATICAL AND BIDDING PURPOSES ONLY. FIXTURE(S) SHALL BE INSTALLED AS PER MANUFACTURERS RECOMMENDATIONS

3 LUMINAIRE MOUNTING - LAY-IN CEILING

NOT TO SCALE

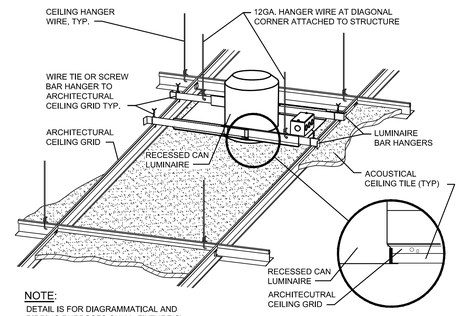

NOTE:
DETAIL IS FOR DIAGRAMMATICAL AND BIDDING PURPOSES ONLY. FIXTURE(S) SHALL BE INSTALLED AS PER MANUFACTURERS RECOMMENDATIONS

4 DOWNLIGHT MOUNTING - LAY-IN CEILING

NOT TO SCALE

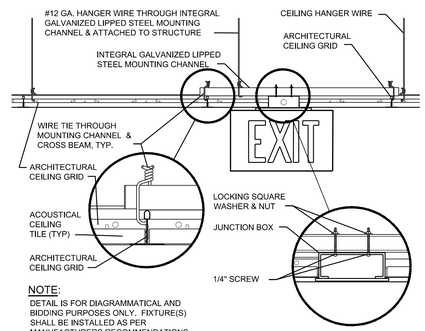

NOTE:
DETAIL IS FOR DIAGRAMMATICAL AND BIDDING PURPOSES ONLY. FIXTURE(S) SHALL BE INSTALLED AS PER MANUFACTURERS RECOMMENDATIONS

5 EXIT SIGN MOUNTING - LAY-IN CEILING

NOT TO SCALE

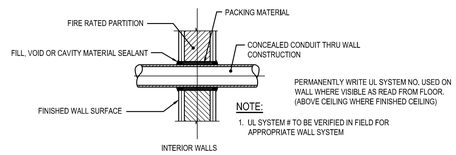

PERMANENTLY WRITE UL SYSTEM NO. USED ON WALL WHERE VISIBLE AS READ FROM FLOOR. (ABOVE CEILING WHERE FINISHED CEILING)

NOTE:
1. UL SYSTEM # TO BE VERIFIED IN FIELD FOR APPROPRIATE WALL SYSTEM

6 CONDUIT FIRE/SMOKE WALL PENETRATION DETAIL

NOT TO SCALE

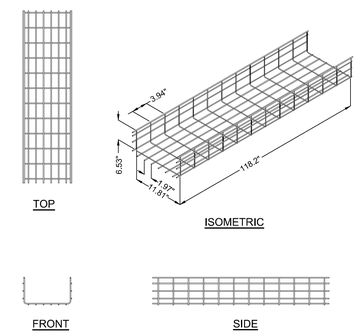

NOTE:
TRAY DESIGNED PER NEMA VE-1 CSA C22.2 No. 126

7 WIRE BASKET CABLE TRAY DETAIL

NOT TO SCALE

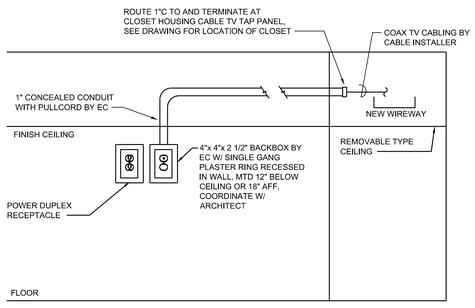

NOTES:
1. THIS DETAIL APPLIES TO THE SYMBOL TV SHOWN ON THE FLOOR PLANS.
2. EC SHALL PROVIDE ALL OUTLET BOXES, RACEWAYS, TELEVISION CABLING, AMPS, TAP PANELS AS NECESSARY.

8 TELEVISION WALL OUTLET ELEVATION

NOT TO SCALE

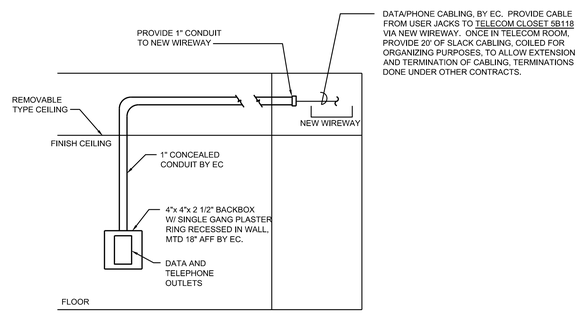

NOTES:
1. UNLESS NOTED OTHERWISE ON THE DRAWINGS, THIS DETAIL APPLIES TO THE SYMBOL ▽ SHOWN ON THE FLOOR PLANS.

9 COMBINATION DATA/TELEPHONE OUTLET ELEVATION

NOT TO SCALE

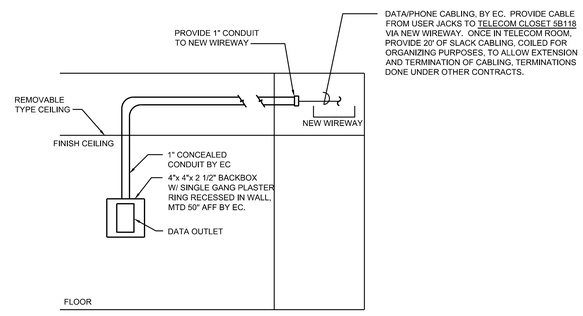

NOTES:
1. UNLESS NOTED OTHERWISE ON THE DRAWINGS, THIS DETAIL APPLIES TO THE SYMBOLS ▽ M SHOWN ON THE FLOOR PLANS.

10 DATA OUTLET ELEVATION - PATIENT MONITOIRNG OUTLET

NOT TO SCALE

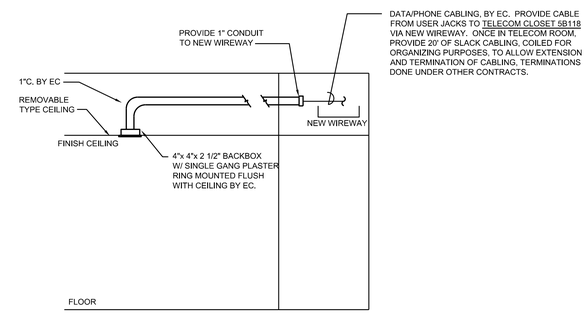

NOTES:
1. UNLESS NOTED OTHERWISE ON THE DRAWINGS, THIS DETAIL APPLIES TO THE SYMBOL ▽ WAP SHOWN ON THE FLOOR PLANS.

11 WIRELESS ACCESS POINT DATA OUTLET ELEVATION

NOT TO SCALE

FULLY SPRINKLERED
100% FINAL SUBMISSION

Revisions:	Date

CONSULTANTS:

COMMONWEALTH OF PENNSYLVANIA REGISTERED PROFESSIONAL ENGINEER TIMOTHY M. EASTWARD No. PE041283-E

ARCHITECT/ENGINEERS:
levelHEADS architects + integrators
H.F. LENZ COMPANY

Drawing Title: ELECTRICAL DETAILS
Approved:
Project Title: 5th Floor SAME DAY SURGERY RENOV. VA Medical Center
Location: Philadelphia, Pennsylvania
Date: 04.28.16
Checked By: TME
Drawn By: RJD
Project Number: 642-11-120
Building Number: TWO
Drawing Number: ES601
Dwg. 48 of 61

Office of Construction and Facilities Management
Department of Veterans Affairs

VA FORM 08-6231

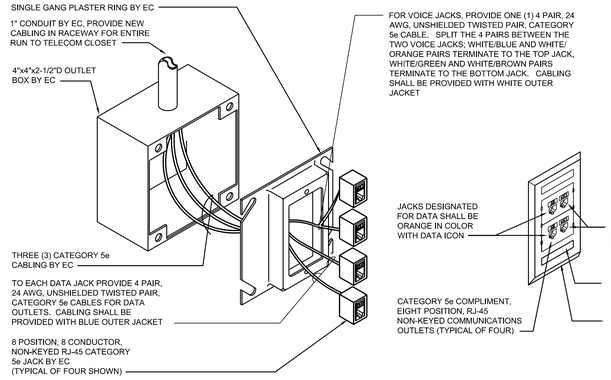

NOTES:

1. THIS DETAIL APPLIES TO THE SYMBOL ▼ SHOWN ON THE FLOOR PLANS.
2. ALL DATA WIRING SHALL BE INSTALLED IN ACCORDANCE WITH APPLICABLE CODES AND STANDARDS.
3. ALL DATA WIRING SHALL BE INSTALLED BY A CERTIFIED INSTALLER.
4. THIS DETAIL IS INTENDED TO ILLUSTRATE THE INTENT OF THE DATA HORIZONTAL WIRING AND DATA OUTLET CONFIGURATION ONLY. ACTUAL REQUIREMENTS AND CONDITIONS MAY VARY. IT SHALL BE THE RESPONSIBILITY OF THE ELECTRICAL CONTRACTOR TO VERIFY SITE CONDITIONS & COORDINATE INSTALLATION REQUIREMENTS WITH OWNER & ARCHITECT.
5. COORDINATE EXACT INFORMATION OUTLET LOCATION WITH PLANNED FURNITURE LAYOUT.
6. AT FACEPLATE VOICE JACKS, SPLIT CATEGORY 5e CABLE SHALL TERMINATE AS FOLLOWS. ON TOP JACK, WHITE/BLUE PAIR SHALL TERMINATE AT WHITE/BLUE PINS AND WHITE/ORANGE SHALL TERMINATE AT WHITE/GREEN PINS. AT BOTTOM JACK, WHITE/GREEN PAIR SHALL TERMINATE AT WHITE/BLUE PINS AND WHITE/BROWN PAIR SHALL TERMINATE AT WHITE/GREEN PINS.
7. DATA AND VOICE CABLING SHALL BE TERMINATED AT DATA JACKS FOLLOWING PIN PAIR ASSIGNMENTS OF EIA/TIA STANDARD T568A AND 606.

1 COMBINATION DATA/TELEPHONE OUTLET AND FACEPLATE DETAIL

NOT TO SCALE

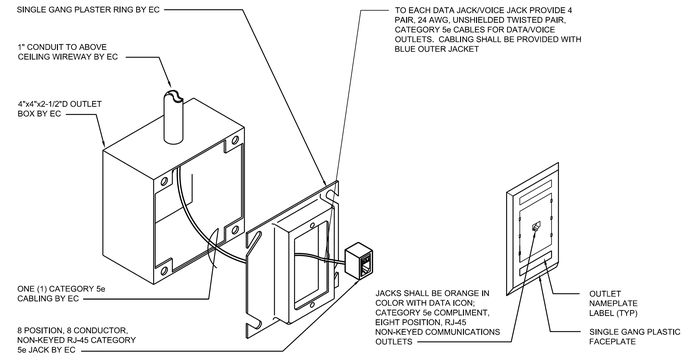

NOTES:

1. THIS DETAIL APPLIES TO THE SYMBOLS ▽WAP ▽M ▼W SHOWN ON THE FLOOR PLANS.
2. ALL DATA WIRING SHALL BE INSTALLED IN ACCORDANCE WITH APPLICABLE CODES AND STANDARDS.
3. ALL DATA WIRING SHALL BE INSTALLED BY A CERTIFIED INSTALLER.
4. THIS DETAIL IS INTENDED TO ILLUSTRATE THE INTENT OF THE DATA HORIZONTAL WIRING AND DATA OUTLET CONFIGURATION ONLY. ACTUAL REQUIREMENTS AND CONDITIONS MAY VARY. IT SHALL BE THE RESPONSIBILITY OF THE ELECTRICAL CONTRACTOR TO VERIFY SITE CONDITIONS & COORDINATE INSTALLATION REQUIREMENTS WITH OWNER & ARCHITECT.
5. COORDINATE EXACT INFORMATION OUTLET LOCATION WITH PLANNED FURNITURE LAYOUT.
6. DATA AND VOICE CABLING SHALL BE TERMINATED AT DATA JACKS FOLLOWING PIN PAIR ASSIGNMENTS OF EIA/TIA STANDARD T568A AND 606.

2 SINGLE OUTLET COMMUNICATIONS DETAIL

NOT TO SCALE

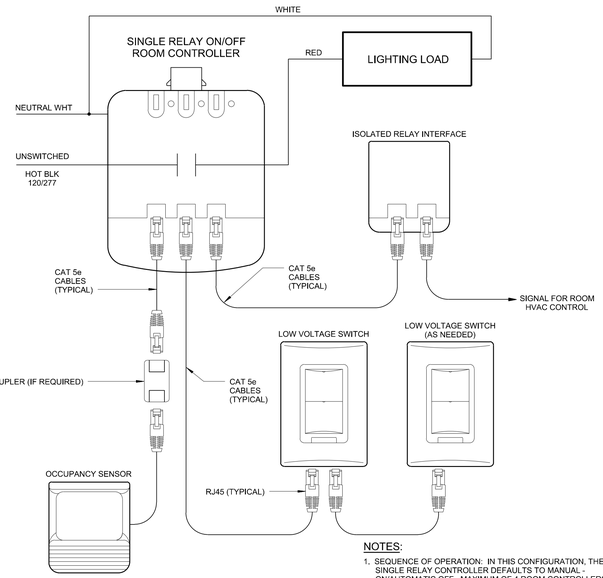

NOTES:

1. SEQUENCE OF OPERATION: IN THIS CONFIGURATION, THE SINGLE RELAY CONTROLLER DEFAULTS TO MANUAL - ON/AUTOMATIC OFF. MAXIMUM OF 4 ROOM CONTROLLERS, CONTROLLING UP TO 8 LOADS.

3 SINGLE RELAY ROOM LIGHTING CONTROL DIAGRAM

NOT TO SCALE

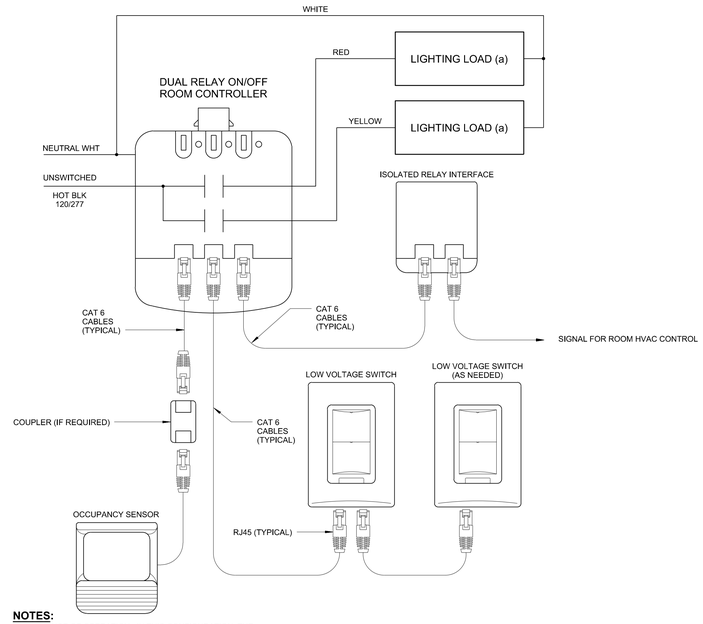

NOTES:

1. SEQUENCE OF OPERATION: IN THIS CONFIGURATION, THE DUAL-RELAY CONTROLLER DEFAULTS TO MULTI-LEVEL AUTOMATICALLY-ON/AUTOMATIC OFF. LOAD (a) TURNS AUTOMATICALLY ON AUTOMATICALLY AND LOAD (b) DEFAULTS TO MANUAL-ON CONTROL; BOTH LOADS TURN AUTOMATICALLY OFF. MAXIMUM OF 4 ROOM CONTROLLERS, CONTROLLING UP TO 8 LOADS.

4 DOUBLE RELAY ROOM LIGHTING CONTROL DIAGRAM

NOT TO SCALE

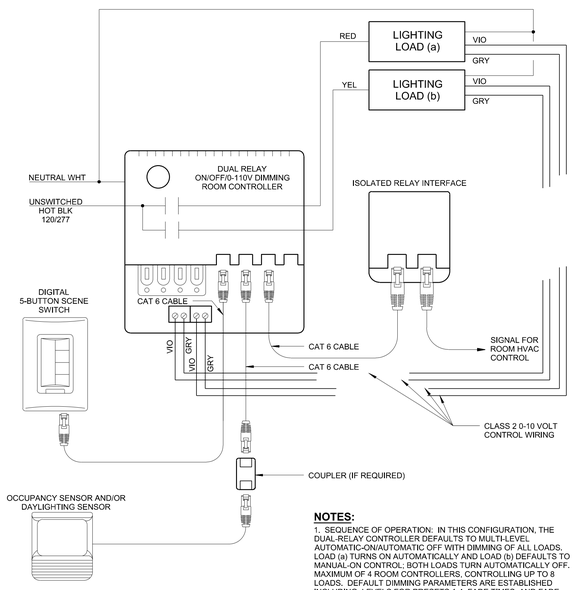

NOTES:

1. SEQUENCE OF OPERATION: IN THIS CONFIGURATION, THE DUAL-RELAY CONTROLLER DEFAULTS TO MULTI-LEVEL AUTOMATIC-ON/AUTOMATIC OFF WITH DIMMING OF ALL LOADS. LOAD (a) TURNS ON AUTOMATICALLY AND LOAD (b) DEFAULTS TO MANUAL-ON CONTROL; BOTH LOADS TURN AUTOMATICALLY OFF. MAXIMUM OF 4 ROOM CONTROLLERS, CONTROLLING UP TO 8 LOADS. DEFAULT DIMMING PARAMETERS ARE ESTABLISHED INCLUDING: LEVELS FOR PRESETS 1-4; FADE TIMES; AND FADE AND RAMP RATES. DIMMING AND SYSTEM PARAMETERS MAY BE CUSTOMIZED.

5 DIMMING RELAY ROOM LIGHTING CONTROL DIAGRAM

NOT TO SCALE

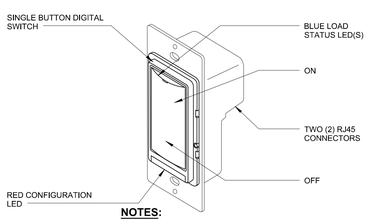

NOTES:

1. THIS DETAIL APPLIES WHERE $L1 OR IS SHOWN ON THE PLANS.
2. PROVIDE MANUFACTURER RECOMMENDATION LABELING ON SWITCHES TO DENOTE THE FUNCTION OF THE SWITCH.

6 SINGLE BUTTON WALL SWITCH

NOT TO SCALE

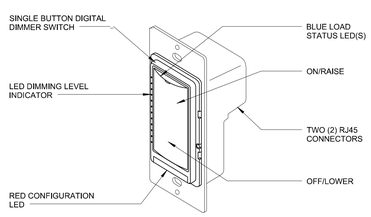

NOTES:

1. THIS DETAIL APPLIES WHERE $L1D OR IS SHOWN ON THE PLANS.
2. PROVIDE MANUFACTURER RECOMMENDATION LABELING ON SWITCHES TO DENOTE THE FUNCTION OF THE SWITCH.

7 SINGLE BUTTON WALL SWITCH W/ DIMMING

NOT TO SCALE

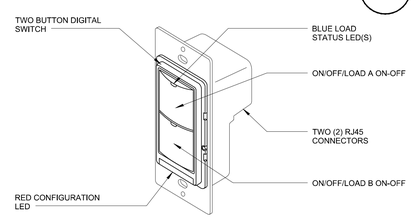

NOTES:

1. THIS DETAIL APPLIES WHERE $L2 OR $L2ab IS SHOWN ON THE PLANS.
2. PROVIDE MANUFACTURER RECOMMENDATION LABELING ON SWITCHES TO DENOTE THE FUNCTION OF THE SWITCH.

8 DOUBLE BUTTON WALL SWITCH

NOT TO SCALE

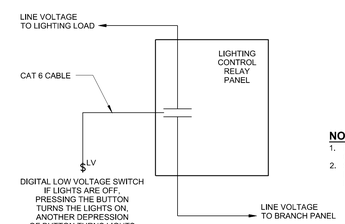

NOTES:

1. DIAGRAM SHOWS HOW ONE RELAY IS TYPICALLY WIRED TO ONE LOW VOLTAGE SWITCH FOR ON/OFF OPERATION.
2. SEQUENCE OF OPERATION: IF LIGHTS ARE OFF, PRESSING THE BUTTON TURNS THE LIGHTS ON, ANOTHER DEPRESSION OF BUTTON TURNS LIGHTS BACK OFF.

9 LIGHTING CONTROL RELAY PANEL SWITCHING DETAIL

NOT TO SCALE

FULLY SPRINKLERED
100% FINAL SUBMISSION

Revisions:	Date

CONSULTANTS:

COMMONWEALTH OF PENNSYLVANIA REGISTERED PROFESSIONAL TIMOTHY M. EARHART NO. PE041287-E

ARCHITECT/ENGINEERS:

levelHEADS architects + integrators

H.F. LENZ COMPANY

Drawing Title: ELECTRICAL DETAILS

Approved:

Project Title: 5th Floor SAME DAY SURGERY RENOV. VA Medical Center

Location: Philadelphia, Pennsylvania

Date: 04.28.16 | Checked By: TME | Drawn By: RJD

Project Number: 642-11-120

Building Number: TWO

Drawing Number: ES602

Dwg. 49 of 61

Office of Construction and Facilities Management

Department of Veterans Affairs

VA FORM 08-6231

LIGHTING FIXTURE SCHEDULE

SYMBOL	DESCRIPTION	MANUFACTURER	CATALOG NUMBER	VOLTAGE	LAMPS	MOUNTING	FOOTNOTES
RF1	2'x2' STEEL TROFFER w/ WHITE FULL FLUSH DOOR OPTIC ASSEMBLY CONSISTS OF AN LAYERED ACRYLIC PANEL IN STEEL FRAME POWDER COAT PAINT FINSHING AFTER FABRICATION	BASE BID LEDALITE CORELITE FINELITE DE-DUCT BID LEDALITE CORELITE FINELITE	9422 D1 ST L B 44 S 1 2 E R3-WN-2L35-1D-UNV-22 HPR-LED-ANR-2X2-DCO-HO-3500K MVOLT-SC 9422 D1 ST H224 S 1 2 SB R3-WN-2L35-1D-UNV-22 HPR-A-2X2-DCO-2T5H-MVOLT-SC-XX-PS	120/277	55W 3500K LED 2-24W T5HO	RECESSED	STATIC, APPROX 5-6" DP. BASE BID IS LED FIXTURE W/ FLUORSCENT LAMPING AS THE DE-DUCT BID. STANDARD 0-10V DIMMING DRIVER FOR LED FIXTURE, PROGRAM RAPID START BALLASTS FOR DE-DUCT BID
RF2	2'x4' STEEL TROFFER w/ WHITE FULL FLUSH DOOR, T8 LAMPS, SPRING LOADED LATCHES, PRISMATIC ACRYLIC LENS & POWDER COAT PAINT FINSHING AFTER FABRICATION	BASE BID H.E. WILLIAMS METALUX LITHONIA DE-DUCT BID H.E. WILLIAMS METALUX LITHONIA	50G-S24-LED*PH60/835-SA12125-UNV 24GR-LD4-56-F1-UNV-L835-CD1-U 2TL4-48L-FW-A12-EZ1-LP835 50G-S24-254T5H-FA12125-(SEE SPEC)-UNV 2GR8-254A125-UNV-ER81-U 2SP-G-2-54T5HO-A12125-MVOLT-GEB10PS-PAF	120/277	56W 3500K LED 2-54W T5HO	RECESSED	STATIC, APPROX 5-6" DP. BASE BID IS LED FIXTURE W/ FLUORSCENT LAMPING AS THE DE-DUCT BID. STANDARD ON/OFF DRIVER FOR LED FIXTURE, PROGRAM RAPID START BALLASTS FOR DE-DUCT BID
RF3	2'x4' MULTI-FUNCTION (AMBIENT/EXAM) FIXTURE W/ STEEL HOUSING, HEAVY DUTY ALUMINUM DOOR FRAME, 0.125 HIGH IMPACT ACRYLIC LENS SEALED TO THE DOOR FRAME 5-STAGE POST FFRABRICATION POWDER COAT ANTIMICROBIAL FINISH AND RADIO FREQUENCY FILTER(S)	BASE BID KENALL FAILSAFE NEW STAR DE-DUCT BID KENALL FAILSAFE NEW STAR	MPCADE24 G 1/2 45L/90L50K DCC DV AC AMF RF TC HJ MAE-G-4-LD4-277-2H1/H1-50-EDD SMDOSG24-HC-IAA-L2-50-L2-50-B-XX-UN-RF MPCADE24 G 1/2 54 SB DV AC AMF RF TC HJ MAE-G-4-154/254-UNV-EBT SMDOSG24-HC-IAA-L2-50-L2-50-B-XX-UN-RF	277	42W AMBIANT 90W EXAM 5000K LEDs 3-54W T5HO	RECESSED	STATIC, APRROX 6" DP, UL LISTED FOR WET LOCATIONS, IP65 CERTIFIED, NSF2 SPLASH/NON FOOD ZONE RATED. LED FIXTURE IS BASE BID, FLUORESCENT SERVES AS DE-DUCT BID. O-10V DIMMING DRIVER REQUIRED FOR LED PROGRAM RAPID START BALLASTS FOR DE-DUCT BID
RF4	2'x4' HIGH EFFICIENCY STEEL TROFFER w/ STEEL FLUSH DOOR, FROSTED RIBBED ACRYLIC SHIELDING, HIGH REFLECTIVE NON-GLARE FINISH & PAINTED POST FABRICATION	BASE BID H.E. WILLIAMS METALUX LITHONIA DE-DUCT BID H.E. WILLIAMS METALUX LITHONIA	HETG-S24-LED*PH76/835 A ED*PH-277 24AC-LD4-73-UNV-L835-CD1-U 2RTL4-72L-EZ1-LP835 HETG-S24-254T5H-A-EBSD95(2)-UNV 2AC-254T5-UNV-STEP DIM-U 2RT5S-54T5HO-MVOLT-GEB95S	277	86W 3500K LED 2-54W T5HO	RECESSED	STATIC, APPROX 3.5" DP. BASE BID IS LED FIXTURE W/ FLUORSCENT LAMPING AS THE DE-DUCT BID. 0-10V DIMMING DRIVER FOR LED FIXTURE, STEP DIMMING BALLAST (0%-50%-100%) FOR DE-DUCT BID BASE BID REQUIRES SINGLE BUTTON DIMMER SWITCH, DE-DUCT BID REQUIRES SINGLE BUTTON SWITCH.
RF5	1'x4' ARCHITECTURAL CLEANROOM FIXTURE W/ 20 GAUGE STEEL HOUSING & 18 GAUGE STEEL FLANGE, HEAVY DUTY EXTRUDED ALUMINUM DOORFRAME, EXTRUDED CLOSED CELL GASKET SEALS DOORFRAME TO HOUSING, HIGH IMPACT ACRYLIC LENS SEALED TO THE DOOR FRAME, TWO T5 HIGH OUTPUT LAMPS AND ONE ELECTRONIC BALLAST	KENALL KURTZON NEW STAR	CSEAI14 2F 254RS 1 277 AMF RF IF DKL-G-1-1X4-2/T5HO-UNV SCF14-HC-OC-1C-2-54-1-A-UN-PR-RF	277	2-54W T5 HIGH OUTPUT	RECESSED	STATIC, APPROX 5" DP. DOORFRAME SUPPORTED FROM HOUSING VIA AIRCRAFT CABLES. STEEL FASTNERS LOCK HOUSING AND DOORFRAME. UL LISTED FOR WET LOCATIONS, RATINGS ARE AS FOLLOWS: IP65, NSF2, K230 LEAKAGE STD, AND CLASS 100 (ISO 5) CLEANROOMS.
RF6	2'x2' STEEL DIRECT/INDIRECT w/ PERFORATED WHITE STEEL DIFFUSER, T8 LAMPS & ONE ELECTRONIC BALLAST	BASE BID H.E. WILLIAMS APPROVED EQAL DE-DUCT BID H.E. WILLIAMS LITHONIA	DIG-S22-L38/835-AD-DRV-UNV DIG-S22-317-WPR-(SEE SPEC)-UNV 2ACV G 3 17 MDR MVOLT (SEE SPEC)	120/277	39W 3500K LED 3-17W T8	RECESSED	STATIC, APPROX 5-6" DP. BASE BID IS LED FIXTURE W/ FLUORSCENT LAMPING AS THE DE-DUCT BID. STANDARD ON/OFF DRIVER FOR LED FIXTURE, PROGRAM RAPID START BALLASTS FOR DE-DUCT BID
RF7	4' LONG, 6" WIDE APPETURED RECESSED LUMIARE w/ 20 GAUGE STEEL HOUSING, WHITE ACRYLIC LENS, EXTRUDED ALUMINUM FLUSH TRIM,	BASE BID FINELITE APPROVED EQAL DE-DUCT BID FOCAL POINT APPROVED EQAL	HP-6R-4-SO-3500K-F-UNV-SC-C1 FAV6-FL-2T8-1C-UNV-SG1-WH-4	120/277	LED 2-17W T8	RECESSED	
DL1	6 INCH RD, LESS THAN 7" DP RECESSED OPEN DNLT 3000K LED ARRAY. w/ LOW IRRIDESCENT SPECULAR REFLECTOR, ONE ELECTRONIC DIMMING DRIVER	H.E. WILLIAMS PORTFOLIO SPECTRUM	LED60-OS-30-830-CS-EDD*OS-277 LD4A28D010TE-ERM6A30830-6LM0LI-HB26 SGE6LEDOS-35W-30K-DS10-X-BH27-AR62305-SG	120/277	43W 3000K LED	RECESSED	LESS THAN 6.5" DEEP
DL2	6" APERTURE INCH SEALED DOWNLIGHT W/ 18-GAUGE DIE-FORMED, CORROSION-RESISTANT STEEL MOUNTING FRAME, MARINE-GRADE DIE-CAST ALUMINUM TRIM, WHITE ANTI-MICROBRIAL ACRYLIC TRIM FINISH, DIE-CAST ALUMINUM HEAT SINK, FULLY GASKETED SEALED LENS AND OPTICAL CHAMBER, SPUN ALUMINUM REFLECTOR W/ HIGH EFFICIENCY DIFFUSE DIFFUSE WHITE COATING, 4000K LED ARRAYS AND 0-10V CONSTANT CURRENT ELECTRONIC DRIVER	KENALL OR APPROVED EQUAL	M2DL6VL2-13L40K-277-DCFW-G	277	13W 4000K LED	RECESSED	LESS THAN 6" DEEP. UL LISTED FOR WET LOCATION, IP65 RATED, NSF2 SPLASH/NON-FOOD ZONE LISTED, MEETS MILITARY STANDARD MIL-STD-461F CONCERNING EMI EMISSIONS
DL3	4 INCH RECESSED DOWN LIGHT 3000K LED ARRAY. w/ LOW IRRIDESCENT SPECULAR REFLECTOR, ONE ELECTRONIC DIMMING DRIVER	H.E. WILLIAMS PORTFOLIO	LSQ45-L30C/830-277 LDSQ41-28-D010TE-ESQ4Q28-830	277	43W 3000K LED	RECESSED	
DL4	4 INCH RD, LESS THAN 7" DP RECESSED OPEN DNLT 3000K LED ARRAY. w/ LOW IRRIDESCENT SPECULAR REFLECTOR, ONE ELECTRONIC DIMMING DRIVER	H.E. WILLIAMS PORTFOLIO	L45-L30C/830-CS-277 LD6A30D010TE-ERM6A30830-6LM0LI-HB26	120/277	43W 3000K LED	RECESSED	LESS THAN 6.5" DEEP
DL5	6 INCH RD, LESS THAN 7" DP RECESSED OPEN DNLT 3500K LED ARRAY. w/ LOW IRRIDESCENT SPECULAR REFLECTOR, CLEAR GLASS LENS, ONE ELECTRONIC DRIVER	PHILIPS OMEGA OR APPROVED EQUAL	OM6LED-27277-R6LED35KMDCSS	120/277	27W 3500K LED	RECESSED	
WF1	STEEL 4'-0" WALL BRACKET w/ UP/DOWN LIGHTING COMPARTMENT, T8 LAMPS & ONE ELECTRONIC BALLAST	LUMAX METALUX COLUMBIA	BF23248-(SEE SPEC)9SAW-U/D BIU-232-UNV-(SEE SPEC) SA4-232-(SEE SPEC)U	120/277	2-32W T8	WALL	
WF2	4' FLUORESCENT WALL MOUNTED FIXTURE W/ MARINE GRADE EXTRUDED ALUMINUM HOUSING AND END CAPS, FROSTED ACRYLIC LENS, TWO T8 LAMPS AND ONE ELECTRONIC BALLAST	HE WILLIAMS OR APPROVED EQUAL	WMA-4-232-AF-DL-AMW-EB1-UNV	120/277	2-32W T8	WALL	
EX1	LED EDGE-LIT EXIT SIGN SINGLE FACE w/ RED LETTERING	McPHILBEN LUMAX SURE-LITES	45VL-1-RM SELX 1 U R CA ES6 1 RM	120/277	LED	UNIVERSAL	PROVIDE CHEVRONS AS REQUIRED
EX2	LED EDGE-LIT EXIT SIGN SINGLE OR DOUBLE FACE w/ RED LETTERING	McPHILBEN LUMAX SURE-LITES	45VL-2-RM SELX 1 or 2 U R CA ES6 2 RM	120/277	LED	UNIVERSAL	PROVIDE CEVRONS AS REQUIRED
UC1	4' STEEL UNDER CABINET w/ SOLID FRONT, LED BUILT IN SWITCH	KENALL FAIL-SAFE	MAUCLED-1-MW-16L30K-48-120-SW UCL-4-LD4-30-A12125-EDC1-UNV-RSW	120	LED	UNDER CABINET	APPROX 1.5"H x 6" W
UC2	3' STEEL UNDER CABINET w/ SOLID FRONT, LED BUILT IN SWITCH	KENALL FAIL-SAFE	MAUCLED-1-MW-16L30K-36-120-SW UCL-3-LD4-30-A12125-EDC1-UNV-RSW	120	LED	UNDER CABINET	APPROX 1.5"H x 6" W

GENERAL LIGHTING NOTES

1. ALTHOUGH FIXTURES ARE SPECIFIED WITH TYPE G OR F TRIM ACCESSORIES, SPECIAL TRIM AND MOUNTING ACCESSORIES SHALL BE USED WHERE NECESSARY TO OBTAIN THE CLOSEST COORDINATION AND COMPATIBILITY WITH THE CEILINGS FURNISHED.
2. FIXTURES SHALL BE DESIGNED, ARRANGED, FURNISHED AND INSTALLED COMPLETE WITH ALL ACCESSORIES FOR MOUNTING IN OR ON PLASTER, ACOUSTICAL TILE CONSTRUCTION, T-BAR TYPE CONSTRUCTION, AND OTHER TYPES OF CEILINGS SHOWN ON THE ARCHITECTURAL DRAWINGS.
3. THE CONTRACTOR SHALL CHECK CAREFULLY WITH THE FINAL CEILING FINISH SCHEDULE OF ROOMS BEFORE ORDERING THE FIXTURES FOR THEY WILL BE HELD RESPONSIBLE FOR THE INSTALLATION COMPLETE IN EVERY DETAIL.
4. ALL WORK SHALL BE COORDINATED WITH THE GENERAL CONTRACTOR, INCLUDING ALL DIMENSIONS.
5. LIGHTING FIXTURES SHALL BE FURNISHED FOR THE BRANCH CIRCUIT VOLTAGE INDICATED ON THE CONTRACT DOCUMENTS.
6. COLOR AND FINISH OF ALL LIGHTING FIXTURES AND COMPONENTS SHALL BE AS DIRECTED BY THE ARCHITECT.
7. ELECTRONIC BALLAST SHALL CONTROL NO MORE THAN 2 LAMPS PER FIXTURE.
8. ALL FIXTURES SHALL BE PAINTED AFTER FABRICATION

LIGHTING CONTROL RELAY PANEL SCHEDULE - PANEL LCRP

RELAY PANEL	RELAY NUMBER	PANEL	CIRCUIT NUMBER	TYPE OF CONTROL
LCRP	1	5SHA	15	TIME OF DAY ON/OFF
LCRP	2	5SHA	17	TIME OF DAY ON/OFF
-	-	-	-	-
-	-	-	-	-

FULLY SPRINKLERED
100% FINAL SUBMISSION

Revisions: | Date

CONSULTANTS:

ARCHITECT/ENGINEERS:

levelHEADS architects + integrators

H.F. LENZ COMPANY

Drawing Title: ELECTRICAL SCHEDULES

Approved:

Project Title: 5th Floor SAME DAY SURGERY RENOV. VA Medical Center

Location: Philadelphia, Pennsylvania

Date: 04.28.16 | Checked By: TME | Drawn By: RJD

Project Number: 642-11-120

Building Number: TWO

Drawing Number: ES701

Dwg. 50 of 61

Office of Construction and Facilities Management

Department of Veterans Affairs

VA FORM 08-6231

EXISTING PANEL 5SHA
NORMAL POWER

MAIN 100 MCB VOLTAGE 480 /277V MOUNTING SURFACE
BUSING 100 AMPS 3-Ph 4-W
SCR EXISTING AIC

NO	DESCRIPTION	CB/P	CB/P	DESCRIPTION	NO
1	ACTIVE	20/1	20/1	ACTIVE	2
3	ACTIVE	20/1	20/1	ACTIVE	4
5	ACTIVE	20/1	20/1	ACTIVE	6
7	ACTIVE	20/1	20/1	ACTIVE	8
9	ACTIVE	20/1	20/1	ACTIVE	10
11	ACTIVE	20/1	20/1	ACTIVE	12
& 13	**LIGHTING**	20/1	20/1	**OFFICE LIGHTING**	14 &
& 15	**LIGHTING**	20/1	20/1	**LIGHTING**	16 &
& 17	**LIGHTING**	20/1	-	SPACE	18
19	SPACE	-	-	SPACE	20
21	SPACE	-	-	SPACE	22
23	SPACE	-	-	SPACE	24
25	SPACE	-	-	SPACE	26
27	SPACE	-	-	SPACE	28

SQUARE D MANUFACTURED PANEL, TYPE NEHB

NEW PANEL 5SLA
NORMAL POWER

MAIN 150 MCB VOLTAGE 208 /120V MOUNTING SQUARE D
BUSING 225 AMPS 3-Ph 4-W
SCR 22,000 AIC

NO	DESCRIPTION	CB/P	CB/P	DESCRIPTION	NO
1	WAITING RM. RECEP	20/1	20/1	WAITING RM. RECEP	2
3	CONSULT RECEP	20/1	20/1	H.A.C. RECEP	4
5	RECEPTACLES	20/1	20/1	RECEPTION RECEP	6
7	CONF. RM. RECEP	20/1	20/1	ON-CALL RECEP	8
9	ON-CALL RECEP	20/1	20/1	OFFICE RECEP	10
11	OFFICE RECEP	20/1	20/1	ANESTHESIA OF. RECEP	12
13	ANESTHESIA OF. RECEP	20/1	20/1	RECEP - N.STATION	14
15	RECEP - N.STATION	20/1	20/1	RECEP - N.STATION	16
17	RECEP - N.STATION	20/1	20/1	OMNICELL REFRIG. RECEP	18
19	NOURISH RECEP	20/1	20/1	NOURISH RECEP	20
21	NOURISH RECEP	20/1	20/1	NOURISH RECEP	22
23	OMNICELL RECEP	20/1	20/1	OMNICELL RECEP	24
25	MONITOR RECEP - BAY 1	20/1	20/1	MONITOR RECEP - BAY 2	26
27	BAY 1 BEDSIDE CONNECTION	20/1	20/1	BAY 2 BEDSIDE CONNECTION	28
29	MONITOR RECEP - BAY 3	20/1	20/1	MONITOR RECEP - BAY 4	30
31	BAY 3 BEDSIDE CONNECTION	20/1	20/1	BAY 4 BEDSIDE CONNECTION	32
33	MONITOR RECEP - BAY 5	20/1	20/1	RECEPTACLES	34
35	BAY 5 BEDSIDE CONNECTION	20/1	20/1	RECEPTACLES	36
37	MONITOR RECEP - BAY6	20/1	20/1	MONITOR RECEP - BAY 7	38
39	BAY 6 BEDSIDE CONNECTION	20/1	20/1	BAY 7 BEDSIDE CONNECTION	40
41	MONITOR RECEP - BAY 8	20/1	20/1	BAY 8 BEDSIDE CONNECTION	42
43	RECEPTACLES	20/1	20/1	POWERED RACEWAY BED STO.	44
45	RECEP - N.STATION	20/1	20/1	RECEP - N.STATION	46
47	BAY 9 BEDSIDE CONNECTION	20/1	20/1	BAY 10 BEDSIDE CONNECTION	48
49	MONITOR RECEP - BAY 9	20/1	20/1	MONITOR RECEP - BAY 10	50
51	MONITOR RECEP - BAY 11	20/1	20/1	RECEPTACLES	52
53	MONITOR RECEP - BAY 12	20/1	20/1	RECEPTACLES	54
55	MONITOR RECEP - SPU 1	20/1	20/1	SPU 1 BEDSIDE CONNECTION	56
57	MONITOR RECEP - SPU 2	20/1	20/1	SPU 2 BEDSIDE CONNECTION	58
59	MONITOR RECEP - SPU 3	20/1	20/1	SPU 3 BEDSIDE CONNECTION	60
61	MONITOR RECEP - SPU 4	20/1	20/1	SPU 4 BEDSIDE CONNECTION	62
63	MONITOR RECEP - SPU 5	20/1	20/1	SPU 5 BEDSIDE CONNECTION	64
65	MONITOR RECEP - SPU 6	20/1	20/1	SPU 6 BEDSIDE CONNECTION	66
67	RECEPTACLES	20/1	20/1	STOR. RM. RECEP.	68
69	RECEPTACLES	20/1	20/1	RECEPTACLES	70
71	RECEPTACLES	20/1	20/1	RECEPTACLES	72
73	POWERED RACEWAY STO.	20/1	20/1	BAY 12 BEDSIDE CONNECTION	74
75	BAY 11 BEDSIDE CONNECTION	20/1	20/1	OFFICE RECEP	76
77	OFFICE RECEP	20/1	20/1	OMNICELL RECP	78
79	UNDER CABINET LIGHTS	20/1	20/1	RECEPTACLES	80
# 81	**SINK FAUCET**	20/1	20/1	SPARE	82
83	SPARE	20/1	20/1	SPARE	84

EXISTING PANEL EC5H2
EMER CRITICAL

MAIN 250 MCB VOLTAGE 480 /277V MOUNTING SURFACE
BUSING 250 AMPS 3-Ph 4-W
SCR EXISTING AIC

NO	DESCRIPTION	CB/P	CB/P	DESCRIPTION	NO
1	-	-	20/1	ACTIVE	2
3	ACTIVE	125/3	20/1	ACTIVE	4
5	-	-	20/1	ACTIVE	6
7	ACTIVE	20/1	20/1	ACTIVE	8
9	ACTIVE	20/1	20/1	ACTIVE	10
11	ACTIVE	20/1	20/1	ACTIVE	12
13	ACTIVE	20/1	20/1	SPARE	14
15	SPARE	20/1	20/1	SPARE	16
17	SPARE	20/1	20/1	SPARE	18
19	SPARE	20/1	20/1	SPARE	20
21	SPARE	20/1	20/1	SPARE	22
23	SPARE	20/1	20/1	SPARE	24
25	SPARE	20/1	20/1	SPARE	26
27	SPARE	20/1	20/1	SPARE	28
29	SPARE	20/1	20/1	SPARE	30
31	SPARE	20/1	-	**-**	32 #
33	SPARE	20/1	125/3	**NEW PANEL EC5H3**	34 #
35	SPARE	20/1	-	**-**	36 #
37	-	-	-	-	38
39	ACTIVE	20/3	20/3	ACTIVE	40
41	-	-	-	-	42

NEW PANEL EC5D
EMER CRITICAL

MAIN 150 MCB VOLTAGE 208 /120V MOUNTING SURFACE
BUSING 225 AMPS 3-Ph 4-W
SCR 22,000 AIC

NO	DESCRIPTION	CB/P	CB/P	DESCRIPTION	NO
1	MONITOR RECEP - BAY 8	20/1	20/1	BAY 8 POWERED HEADWALL CONNECTION	2
3	BAY 8 BED CONNECTION	20/1	20/1	MONITOR RECEP - BAY 7	4
5	BAY 7 POWERED HEADWALL CONNECTION	20/1	20/1	BAY 7 BED CONNECTION	6
7	MONITOR RECEP - BAY 6	20/1	20/1	BAY 6 POWERED HEADWALL CONNECTION	8
9	BAY 6 BED CONNECTION	20/1	20/1	RECEP - N.STATION	10
11	RECEP - N.STATION	20/1	20/1	MONITOR RECEP - BAY 5	12
13	BAY 5 POWERED HEADWALL CONNECTION	20/1	20/1	BAY 5 BED CONNECTION	14
15	MONITOR RECEP - BAY 4	20/1	20/1	BAY 4 POWERED HEADWALL CONNECTION	16
17	BAY 4 BED CONNECTION	20/1	20/1	MONITOR RECEP - BAY 3	18
19	BAY 3 POWERED HEADWALL CONNECTION	20/1	20/1	BAY 3 BED CONNECTION	20
21	MONITOR RECEP - BAY 2	20/1	20/1	BAY 2 POWERED HEADWALL CONNECTION	22
23	BAY 2 BED CONNECTION	20/1	20/1	MONITOR RECEP - BAY 1	24
25	BAY 1 POWERED HEADWALL CONNECTION	20/1	20/1	BAY 1 BED CONNECTION	26
27	MONITORS	20/1	20/1	CRASH CART	28
29	CRASH CART	20/1	20/1	MONITOR RECEP - BAY 10	30
31	BAY 10 POWERED HEADWALL CONNECTION	20/1	20/1	BAY 10 BED CONNECTION	32
33	MONITOR RECEP - BAY 9	20/1	20/1	BAY 9 POWERED HEADWALL CONNECTION	34
35	BAY 9 BED CONNECTION	20/1	20/1	NOURISH RECEP	36
37	NOURISH RECEP	20/1	20/1	SPARE	38
39	OMNICELL RECEP	20/1	20/1	OMNICELL REFRIG. RECEP	40
41	RECEPTACLE	20/1	20/1	OMNICELL RECEP	42
43	OFFICE RECEP	20/1	20/1	OMNICELL RECEP	44
45	POWERED RACEWAY BED STO.	20/1	20/1	OMNICELL RECP	46
47	NURSE CALL CONTROL CABINET	20/1	20/1	RECEPTACLE	48
49	SPARE	20/1	20/1	SPARE	50
51	SPARE	20/1	20/1	SPARE	52
53	SPARE	20/1	20/1	SPARE	54
55	SPARE	20/1	20/1	SPARE	56
57	SPARE	20/1	20/1	SPARE	58
59	SPARE	20/1	20/1	SPARE	60
61	SPARE	20/1	20/1	SPARE	62
63	SPARE	20/1	20/1	SPARE	64
65	SPARE	20/1	20/1	SPARE	66
67	SPARE	20/1	20/1	SPARE	68
69	SPARE	20/1	20/1	SPARE	70
71	SPARE	20/1	20/1	SPARE	72
73	SPARE	20/1	20/1	SPARE	74
75	SPARE	20/1	20/1	SPARE	76
77	SPARE	20/1	20/1	SPARE	78
79	SPARE	20/1	20/1	SPARE	80
81	SPARE	20/1	20/1	SPARE	82
83	SPARE	20/1	20/1	SPARE	84

NEW PANEL EC5H3
EMER CRITICAL

MAIN 125 MCB VOLTAGE 480 /277V MOUNTING SURFACE
BUSING 125 AMPS 3-Ph 4-W
SCR 22,000 AIC

NO	DESCRIPTION	CB/P	CB/P	DESCRIPTION	NO
1	SPU BAY LIGHTS	20/1	20/1	NURSES STATION LIGHTS	2
3	PACU BAY LIGHTS	20/1	20/1	PACU LIGHTS	4
5	ISO. BAY LIGHTS	20/1	20/1	SPARE	6
7	SPARE	20/1	20/1	SPARE	8
9	SPARE	20/1	20/1	SPARE	10
11	SPARE	20/1	20/1	SPARE	12
13	SPARE	20/1	20/1	SPARE	14
15	SPARE	20/1	20/1	SPARE	16
17	SPARE	20/1	20/1	SPARE	18
19	SPARE	20/1	20/1	SPARE	20
21	SPARE	20/1	20/1	SPARE	22
23	SPARE	20/1	20/1	SPARE	24
25	SPARE	20/1	-	-	26
27	SPARE	20/1	70/3	45kVA XFMR FOR NEW PANEL 'EC5D'	28
29	SPARE	20/1	-	-	30

EXISTING PANEL EL5B
LIFE SAFETY

MAIN 60 MCB VOLTAGE 480 /277V MOUNTING SURFACE
BUSING 60 AMPS 3-Ph 4-W
SCR EXISTING AIC

NO	DESCRIPTION	CB/P	CB/P	DESCRIPTION	NO
1	ACTIVE	20/1	20/1	ACTIVE	2
3	ACTIVE	20/1	20/1	ACTIVE	4
5	ACTIVE	20/1	20/1	ACTIVE	6
7	ACTIVE	20/1	20/1	ACTIVE	8
9	ACTIVE	20/1	20/1	ACTIVE	10
11	ACTIVE	20/1	20/1	**CORR. LIGHTING**	12 &
& 13	**LIGHTING**	20/1	-	SPACE	14
15	SPACE	-	-	SPACE	16
17	SPACE	-	-	SPACE	18

SQUARE D MANUFACTURED PANEL, TYPE NEHB

EXISTING PANEL EC3
EMERGENCY CRITICAL

MAIN 600 MCB VOLTAGE 208 /120V MOUNTING SURFACE
BUSING 600 AMPS 3-Ph 4-W
SCR EXISTING AIC

NO	DESCRIPTION	CB/P	CB/P	DESCRIPTION	NO
1	-	-	-	-	2 #
3	EXISTING PANEL 'EC3C'	150/3	100/3	**NEW PANEL 'EC5E'**	4 #
5	-	-	-	-	6 #
7	-	-	-	-	8
9	EXISTING PANEL 'EC3I'	100/3	100/3	EXISTING PANEL 'EC3D'	10
11	-	-	-	-	12
13	-	-	-	-	14
15	EXISTING PANEL 'EC3F'	100/3	225/3	EXISTING PANEL 'EC3E	16
17	-	-	-	-	18
19	-	-	-	-	20
21	SPARE	20/3	100/3	SPARE	22
23	-	-	-	-	24

EXISTING SQAURE D 'HCM' PANELBOARD.

NEW PANEL EC5E
EMER CRITICAL

MAIN 100 MCB VOLTAGE 208 /120V MOUNTING SURFACE
BUSING 225 AMPS 3-Ph 4-W
SCR 22,000 AIC

NO	DESCRIPTION	CB/P	CB/P	DESCRIPTION	NO
1	RECEPTION RECEP	20/1	20/1	NURSES STATION RECEP	2
3	NURSES STATION RECEP	20/1	20/1	NURSES STATION RECEP	4
5	NURSES STATION RECEP	20/1	20/1	BAY 11 BED CONNECTION	6
7	BAY 11 POWERED HEADWALL CONNECTION	20/1	20/1	MONITOR RECEP - BAY 11	8
9	BAY 12 BED CONNECTION	20/1	20/1	MONITOR RECEP - BAY 12	10
11	BAY 12 POWERED HEADWALL CONNECTION	20/1	20/1	RECEPTACLES	12
13	SPU 1 BED CONNECTION	20/1	20/1	MONITOR RECEP - SPU 1	14
15	SPU 1 POWERED HEADWALL CONNECTION	20/1	20/1	SPU 2 POWERED HEADWALL CONNECTION	16
17	SPU 2 BED CONNECTION	20/1	20/1	MONITOR RECEP - SPU 2	18
19	SPU 3 POWERED HEADWALL CONNECTION	20/1	20/1	MONITOR RECEP - SPU 3	20
21	SPU 3 BED CONNECTION	20/1	20/1	MONITOR RECEP - SPU 4	22
23	SPU 4 POWERED HEADWALL CONNECTION	20/1	20/1	MONITOR RECEP - SPU 5	24
25	SPU 4 BED CONNECTION	20/1	20/1	MONITOR RECEP - SPU 6	26
27	SPU 5 POWERED HEADWALL CONNECTION	20/1	20/1	SPU 6 POWERED HEADWALL CONNECTION	28
29	SPU 5 BED CONNECTION	20/1	20/1	SPU 6 BED CONNECTION	30
31	RECEPTACLES	20/1	20/1	STOR. RM. RECEP	32
33	RECEPTACLES	20/1	20/1	RECEPTACLES	34
35	SPARE	20/1	20/1	SPARE	36
37	SPARE	20/1	20/1	SPARE	38
39	SPARE	20/1	20/1	SPARE	40
41	SPARE	20/1	20/1	SPARE	42
43	SPARE	20/1	20/1	SPARE	44
45	SPARE	20/1	20/1	SPARE	46
47	SPARE	20/1	20/1	SPARE	48
49	SPARE	20/1	20/1	SPARE	50
51	SPARE	20/1	20/1	SPARE	52
53	SPARE	20/1	20/1	SPARE	54

EXISTING PANEL EE6A
EMER EQUIPMENT

MAIN --- MCB VOLTAGE 480 /277V MOUNTING SURFACE
BUSING --- AMPS 3-Ph 4-W
SCR EXISTING AIC

NO	DESCRIPTION	CB/P	CB/P	DESCRIPTION	NO
& 1	**-**	-	-	-	2
& 3	**NEW RETURN AIR FAN AC-25**	20/3	90/3	EXISTING ENERGY RECVOERY UNIT ERU-2	4
& 5	**-**	-	-	-	6
@ 7	**-**	-	-	**-**	8 @
@ 9	**NEW SUPPLY AIR FAN AC-25**	90/3	70/3	**TEMORARY AIR HANDLING UNIT**	10 @
@ 11	**-**	-	-	**-**	12 @
13	-	-	-	SPACE	14
15	EXISTING SUPPLY AIR FAN AC-27	50/3	-	SPACE	16
17	-	-	-	SPACE	18
19	-	-	-	-	20
21	EXISTING XFMR FOR PNL 'EE6AL'	20/3	50/3	EXISTING ENERGY RECVOERY UNIT ERU-3	22
23	-	-	-	-	24
25	-	-	-	-	26
27	EXISTING RETURN AIR FAN AC-27	20/3	35/3	EXISTING ANGIO SUITE HVAC EQUIPMENT	28
29	-	-	-	-	30
31	SPACE	-	-	-	32
33	SPACE	-	100/3	EXISTING SUPPLY FAN SF-23	34
35	SPACE	-	-	-	36
37	-	-	-	-	38
39	EXISTING ANGIO SUITE EQUIPMENT	45/3	100/3	EXISTING SUPPLY FAN SF-24	40
41	-	-	-	-	42

EXISTING PANEL EE6AL
EMER EQUIPMENT

MAIN 60 MCB VOLTAGE 208 /120V MOUNTING SQUARE D
BUSING 100 AMPS 3-Ph 4-W
SCR EXISTING AIC

NO	DESCRIPTION	CB/P	CB/P	DESCRIPTION	NO
1	EXISTING CONTROL PANEL	20/1	20/1	EXISTING LIGHTS/RECEPTACLES	2
3	EXISTING CONTROL PANEL	20/1	20/1	EXISTING LIGHTS/RECEPTACLES	4
5	EXISTING CONTROL PANEL	20/1	20/1	**NEW DDC PANEL - AC-25**	6 &
& 7	**NEW MOTOR OPERATED DAMPERS**	20/1	-	-	8
9	SPACE	20/1	15/3	EXISTING GLYCOL PUMP	10
11	SPACE	20/1	-	-	12
13	SPACE	20/1	-	-	14
15	SPACE	20/1	15/3	EXISTING GLYCOL PUMP	16
17	EXISTING CONTROL PANEL	20/1	-	-	18
19	EXISTING DAMPERS	20/1	20/1	**NEW AC-25 INTERNAL LIGHTS/RECEPS**	20 &
21	EXISTING AC-27 INTERNAL LIGHTS	20/1	20/1	**UV LIGHT FOR AC-25**	22 &
23	SPACE	20/1	20/1	-	24
25	SPACE	20/1	20/1	-	26
27	SPACE	20/1	20/1	-	28
29	SPACE	20/1	20/1	-	30

EATON MANUFACTURED PANEL, TYPE 'PRL1A'

EXISTING PANEL 7SL
NORMAL POWER

MAIN 400 MCB VOLTAGE 208 /120V MOUNTING SQUARE D
BUSING 400 AMPS 3-Ph 4-W
SCR EXISTING AIC

NO	DESCRIPTION	CB/P	CB/P	DESCRIPTION	NO
1	-	20/1	-	-	2
3	EX PANEL '7SLA'	20/1	20/3	SPARE	4
5	-	20/1	-	-	6
7	-	20/1	-	-	8
9	EX PANEL '8SLA'	20/1	20/3	SPARE	10
11	-	20/1	-	-	12
13	-	20/1	-	-	14
15	EX. PANEL '5SLA'	20/1	20/3	SPARE	16
17	-	20/1	-	-	18
19	-	-	-	-	20
21	SPARE	20/3	30/3	SPARE	22
23	-	-	-	-	24

SCHEDULE IS FOR REFERENCE ONLY, NO NEW WORK REQUIRED

EXISTING PANEL 5ELA
NORMAL POWER

MAIN 100 MCB VOLTAGE 208 /120V MOUNTING SQUARE D
BUSING 100 AMPS 3-Ph 4-W
SCR 22,000 AIC

NO	DESCRIPTION	CB/P	CB/P	DESCRIPTION	NO
1	ACTIVE	20/1	20/1	ACTIVE	2
3	ACTIVE	20/1	20/1	ACTIVE	4
5	ACTIVE	20/1	20/1	ACTIVE	6
7	ACTIVE	20/1	20/1	ACTIVE	8
9	ACTIVE	20/1	20/1	ACTIVE	10
11	ACTIVE	20/1	20/1	ACTIVE	12
13	ACTIVE	20/1	20/1	ACTIVE	14
15	ACTIVE	20/1	20/1	ACTIVE	16
17	ACTIVE	20/1	20/1	ACTIVE	18
19	ACTIVE	20/1	20/1	ACTIVE	20
21	ACTIVE	20/1	20/1	ACTIVE	22
23	ACTIVE	20/1	20/1	ACTIVE	24
25	ACTIVE	20/1	20/1	ACTIVE	26
27	ACTIVE	20/1	20/1	ACTIVE	28
29	ACTIVE	20/1	20/1	ACTIVE	30
31	ACTIVE	20/1	20/1	ACTIVE	32
33	ACTIVE	20/1	20/1	ACTIVE	34
35	ACTIVE	20/1	20/1	ACTIVE	36
37	ACTIVE	20/1	20/1	ACTIVE	38
39	ACTIVE	20/1	20/1	ACTIVE	40
41	ACTIVE	20/1	20/1	ACTIVE	42
# 43	**SINK FAUCET**	20/1	20/1	ACTIVE	44
45	SPARE	20/1	20/1	ACTIVE	46
47	SPARE	20/1	20/1	ACTIVE	48
49	SPARE	20/1	20/1	ACTIVE	50
51	ACTIVE	20/1	20/1	SPARE	52
53	ACTIVE	20/1	20/1	SPARE	54
55	ACTIVE	20/1	20/1	SPARE	56
57	SPARE	20/1	20/1	SPARE	58
59	SPARE	20/1	20/1	SPARE	60

EXISTING ISOLATION PANEL IPU-1

MAIN 30 MCB VOLTAGE 120 /208V MOUNTING RECESSED
BUSING 60 AMPS 1-Ph 2-W
SCR EX AIC

NO	DESCRIPTION	CB/P	CB/P	DESCRIPTION	NO
1	SURGICAL PENDANT	20/2	20/2	SPARE (ACTIVE)	2
3	-	-	-	-	4
5	SPARE (ACTIVE)	20/2	20/2	SURGICAL PENDANT	6
7	-	-	-	-	8
9	SURGICAL PENDANT	20/2	20/2	SPARE (ACTIVE)	10
11	-	-	-	-	12
13	SPARE (ACTIVE)	20/2	20/2	SPARE (ACTIVE)	14
15	-	-	-	-	16
17	SURGICAL PENDANT	20/2	20/2	SPARE (ACTIVE)	18
19	-	-	-	-	20

PANELBOARD COMPLETE WITH 5 KVA ISOLATION TRANSFORMER

EXISTING SQUARE D ISOLATION PANELS - FOR REFERENCE ONLY

EXISTING ISOLATION PANEL IPU-2

MAIN 30 MCB VOLTAGE 120 /208V MOUNTING RECESSED
BUSING 60 AMPS 1-Ph 2-W
SCR EX AIC

NO	DESCRIPTION	CB/P	CB/P	DESCRIPTION	NO
1	XRAY VIEWER	20/2	20/2	REC. ON WEST WALL	2
3	-	-	-	-	4
5	SURGICAL LIGHT	20/2	20/2	REC. ON WEST WALL	6
7	-	-	-	-	8
9	SPARE	20/2	20/2	SPARE	10
11	-	-	-	-	12
13	SPARE	20/2	20/2	SPARE	14
15	-	-	-	-	16
17	SPARE	20/2	20/2	SPARE	18
19	-	-	-	-	20

PANELBOARD COMPLETE WITH 5 KVA ISOLATION TRANSFORMER

EXISTING SQUARE D ISOLATION PANELS - FOR REFERENCE ONLY

EXISTING ISOLATION PANEL IPU-3

MAIN 45 MCB VOLTAGE 120 /208V MOUNTING RECESSED
BUSING 60 AMPS 1-Ph 2-W
SCR EX AIC

NO	DESCRIPTION	CB/P	CB/P	DESCRIPTION	NO
1	BOOM REC. NORTH	20/2	20/2	IPE REC. SOUTH	2
3	-	-	-	-	4
5	XRAY VIEWER	20/2	20/2	TIME ELAPSED CLOCK	6
7	-	-	-	-	8
9	BOOM REC. NORTH	20/2	20/2	REC. WEST WALL	10
11	-	-	-	-	12
13	IPE REC. SOUTH	20/2	20/2	SPARE	14
15	-	-	-	-	16
17	BOOM REC. NORTH	20/2	20/2	SPARE	18
19	-	-	-	-	20
21	IPE REC. SOUTH	20/2	20/2	SPARE	22
23	-	-	-	-	24
25	BOOM REC. NORTH	20/2	20/2	SPARE	26
27	-	-	-	-	28

PANELBOARD COMPLETE WITH 5 KVA ISOLATION TRANSFORMER

EXISTING SQUARE D ISOLATION PANELS - FOR REFERENCE ONLY

EXISTING ISOLATION PANEL IPU-4

MAIN 45 MCB VOLTAGE 120 /208V MOUNTING RECESSED
BUSING 60 AMPS 1-Ph 2-W
SCR EX AIC

NO	DESCRIPTION	CB/P	CB/P	DESCRIPTION	NO
1	BOOM REC. SOUTH	20/2	20/2	REC. NORTH AND EAST	2
3	-	-	-	-	4
5	REC. EAST	20/2	20/2	SPARE	6
7	-	-	-	-	8
9	BOOM REC. NORTH	20/2	20/2	SPARE	10
11	-	-	-	-	12
13	REC. EAST AND NORTH	20/2	20/2	SPARE	14
15	-	-	-	-	16
17	BOOM REC. NORTH	20/2	20/2	SPARE	18
19	-	-	-	-	20
21	REC. EAST AND NORTH	20/2	20/2	SPARE	22
23	-	-	-	-	24
25	BOOM REC. NORTH	20/2	20/2	SURGICAL LIGHTS	26
27	-	-	-	-	28

PANELBOARD COMPLETE WITH 5 KVA ISOLATION TRANSFORMER

EXISTING SQUARE D ISOLATION PANELS - FOR REFERENCE ONLY

PANEL SCHEDULE NOTATION LEGEND

- # - INDICATES TERMINATION OF BRANCH CONDUCTORS ON EXISTING SPARE BREAKER.
- & - INDICATES TERMINATION OF BRANCH CONDUCTORS ON NEW CIRCUIT BREAKER PROVIDED IN EXISTING SPARE SPACE.
- $ - INDICATES CIRCUIT BREAKER AND BRANCH CIRCUIT PROVIDED UNDER SEPRATE CONTRACT.
- @ - INDICATES TERMINATION OF BRANCH CONDUCTORS ON NEW CIRCUIT BREAKER PROVIDED IN SPARE SPACE CREATED BY REMOVAL OF EXISTING CIRCUIT BREAKER(S).

FULLY SPRINKLERED
100% FINAL SUBMISSION

Revisions | Date

CONSULTANTS:

COMMONWEALTH OF PENNSYLVANIA
PROFESSIONAL
TIMOTHY M. EARHART
ENGINEER

ARCHITECT/ENGINEERS:
levelHEADS architects + integrators
H.F. LENZ COMPANY

Drawing Title: ELECTRICAL SCHEDULES
Approved:

Project Title: 5th Floor SAME DAY SURGERY RENOV. VA Medical Center
Location: Philadelphia, Pennsylvania
Date: 04.28.16 | Checked By: TME | Drawn By: RJD

Project Number: 642-11-120
Building Number: TWO
Drawing Number: ES702
Dwg. 51 of 61

Office of Construction and Facilities Management
Department of Veterans Affairs

VA FORM 08-6231