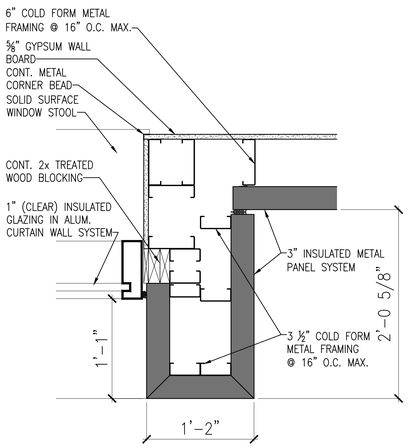

DETAIL B5
SCALE: 1 1/2" =1'-0" REF:

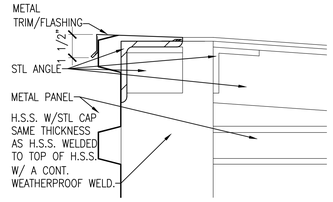

DETAIL A4
SCALE: 3"=1'-0" REF:

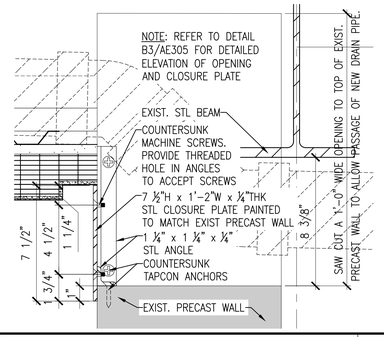

DETAIL A3
SCALE: 3"=1'-0" REF:

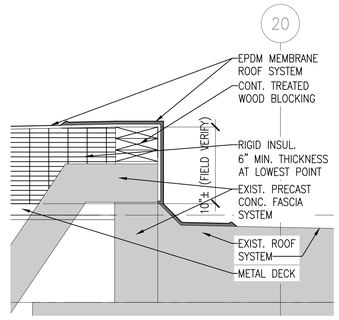

DETAIL A2
SCALE: 1 1/2"=1'-0" REF:

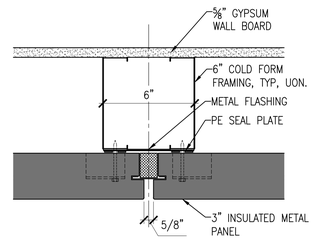

DETAIL A1
SCALE: 3"=1'-0" REF:

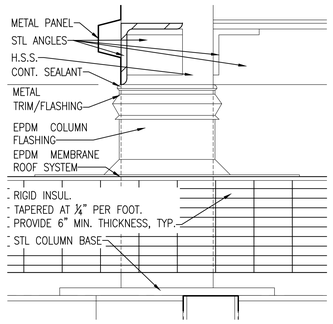

DETAIL B4
SCALE: 3"=1'-0" REF:

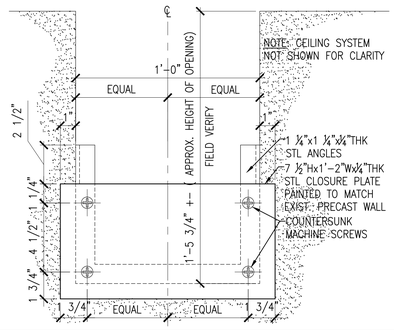

DETAIL B3
SCALE: 3"=1'-0" REF:

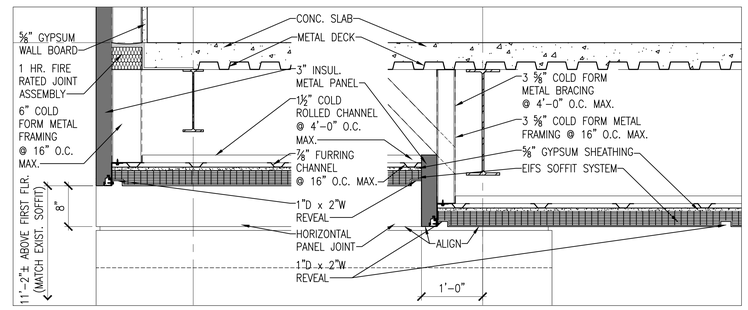

DETAIL B2
SCALE: 1"=1'-0" REF:

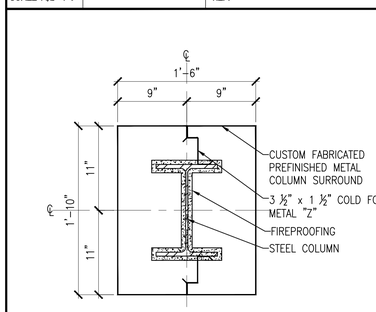

DETAIL C5
SCALE: 1 1/2" =1'-0" REF:

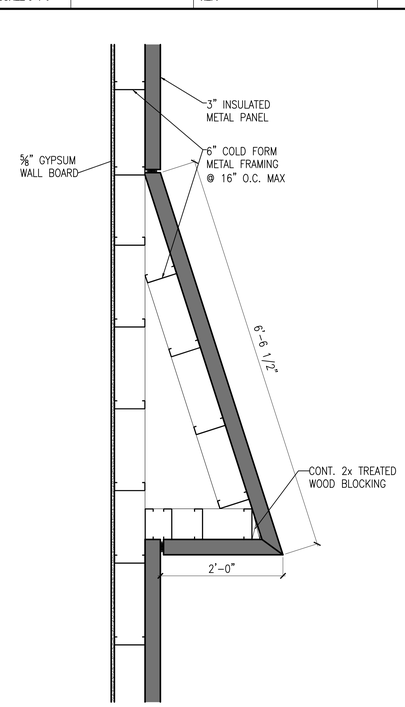

DETAIL D4
SCALE: 1 1/2"=1'-0" REF:

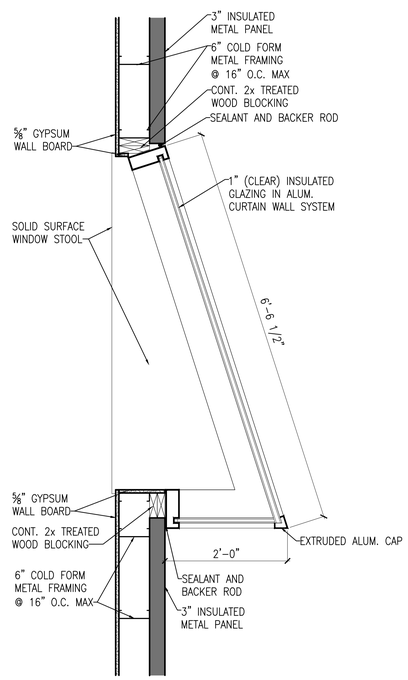

DETAIL D3
SCALE: 1 1/2" = 1'-0" REF:

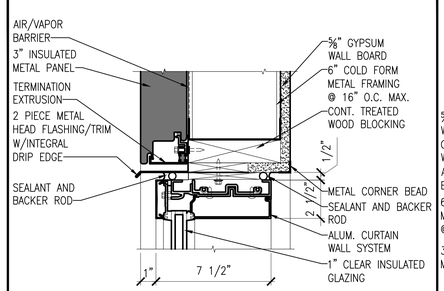

DETAIL C2
SCALE: 3"=1'-0" REF:

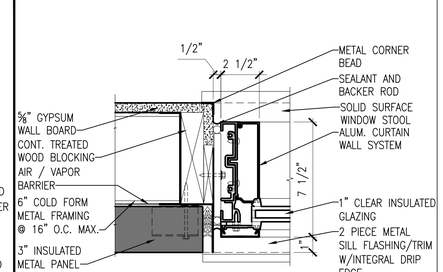

DETAIL C1
SCALE: 3"=1'-0" REF:

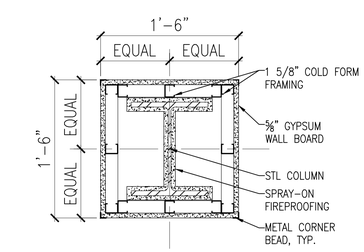

DETAIL - TYPICAL COLUMN SURROUND D5
SCALE: 1 1/2"=1'-0" REF:

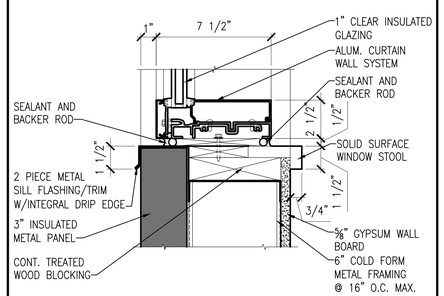

DETAIL D2
SCALE: 3"=1'-0" REF:

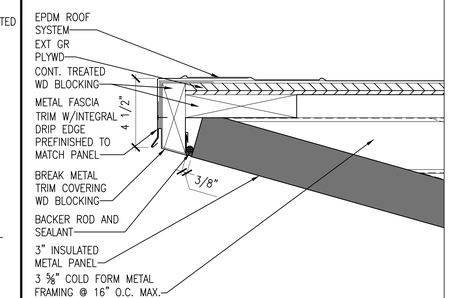

DETAIL D1
SCALE: 3"=1'-0" REF:

ISSUE FOR BIDDING	10/06/2015
Revisions:	Date

VA FORM 08-6231

CONSULTANTS

LEO A DALY
PLANNING ARCHITECTURE ENGINEERING INTERIORS
1201 Connecticut Ave NW Washington DC 20036 USA
Tel 202-861-4600 Fax 202-872-8530

EBL ENGINEERS, LLC
MECHANICAL • ELECTRICAL • FIRE PROTECTION
The Professional Engineering Center
8005 Harford Road, Baltimore, Maryland 21234-5701
(410) 668-8000 FAX (410) 668-8001
e-mail: ebl@eblengineers.com
Fire Protection – Life Safety – Code Compliance

JMT JOHNSON, MIRMIRAN & THOMPSON
Engineering A Brighter Future
72 Loveton Circle
Sparks, Maryland 21152
phone / 410.329.3100
fax / 410.472.2200

AMT LLC
PROFESSIONAL ENGINEERS & LAND SURVEYORS
10 G STREET, NE, SUITE 430
WASHINGTON, DC, 20002
PH: (202) 289-4545
FAX: (202) 289-5051

DISTRICT OF COLUMBIA
KHALID I. BHATTI
100943
LICENSED
ARCHITECT

ARCHITECT
MIMARCH
MIMAR ARCHITECTS, INC.
Architecture, Engineering, Design/Build
7004 Security Blvd, Suite #210
Baltimore, MD 21244
Phone: 410-944-4900 Fax: 410-944-8044

Drawing Title
SECTIONS AND DETAILS

Approved: Project Director
APPROVED - BY - NAME
APPROVED - BY - TITLE/RANK
STATION - MANAGEMENT

Project Title
ADDITION AND RENOVATION OF THE COMMUNITY LIVING CENTER

Location
VAMC WASHINGTON, DC

Date	Checked	Drawn
APPROVED - DATE	BV	MC/RCH

Project Number 688-400
Building Number BUILDING #6
Drawing Number AE-305
Dwg. XX of

Office of Construction and Facilities Management
Department of Veterans Affairs

P:\13-1311.04-VAMC DC Community Living Center\02 DESIGN\05 Drawings\AE-305 - Wall Sections and Details.dwg, 12/3/2015 9:23:20 AM, DWG To PDF.pc3

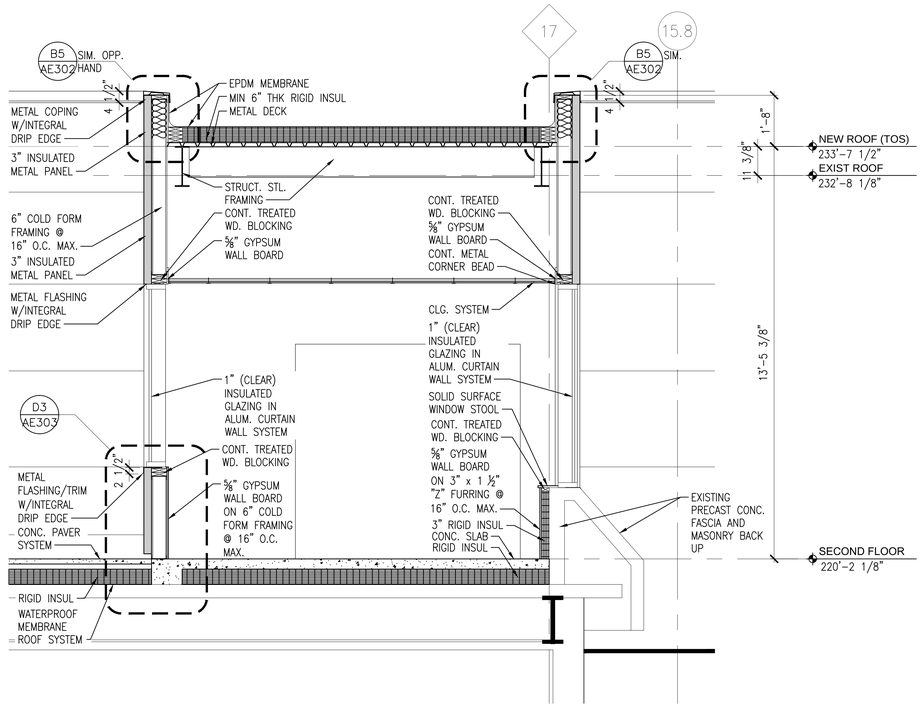

WALL SECTION

SCALE: 1/2"=1'-0" REF:

B5

A2 SCALE: REF:

A1 SCALE: REF:

B2 SCALE: REF:

B1 SCALE: REF:

C5 SCALE: REF:

C4 SCALE: REF:

C3 SCALE: REF:

C2 SCALE: REF:

C1 SCALE: REF:

D5 SCALE: REF:

D4 SCALE: REF:

D3 SCALE: REF:

D2 SCALE: REF:

D1 SCALE: REF:

GRAPHIC SCALE
0 6" 1' 2' 3' 6'
SCALE: 1/2"=1'-0"

ISSUE FOR BIDDING	10/06/2015
Revisions:	Date

CONSULTANTS

LEO A DALY
PLANNING ARCHITECTURE ENGINEERING INTERIORS
1201 Connecticut Ave NW Washington DC 20036 USA
Tel 202-861-4600 Fax 202-872-8530

EBL ENGINEERS, LLC
MECHANICAL • ELECTRICAL • FIRE PROTECTION
The Professional Engineering Center
8005 Harford Road, Baltimore, Maryland 21234-5701
(410) 668-8000 FAX (410) 668-8001
e-mail ebl@eblengineers.com
Fire Protection – Life Safety – Code Compliance

JMT JOHNSON, MIRMIRAN & THOMPSON
Engineering A Brighter Future
72 Loveton Circle
Sparks, Maryland 21152
phone / 410.329.3100
fax / 410.472.2200

AMT LLC
PROFESSIONAL ENGINEERS & LAND SURVEYORS
10 G STREET, NE, SUITE 430
WASHINGTON, DC, 20002
PH: (202) 289-4545
FAX: (202) 289-5051

DISTRICT OF COLUMBIA
KHALID I. BHATTI
100943
LICENSED
ARCHITECT

ARCHITECT

MIMARCH

MIMAR ARCHITECTS, INC.
Architecture, Engineering, Design/Build
7004 Security Blvd, Suite #210
Baltimore, MD 21244
Phone: 410-944-4900 Fax: 410-944-8044

Drawing Title
WALL SECTIONS

Approved: Project Director
APPROVED - BY - NAME
APPROVED - BY - TITLE/RANK
STATION - MANAGEMENT

Project Title
ADDITION AND RENOVATION OF THE COMMUNITY LIVING CENTER

Location
VAMC WASHINGTON, DC

Date	Checked	Drawn
APPROVED - DATE	BV	MC/RCH

Project Number
688-400

Building Number
BUILDING #6

Drawing Number
AE-306
Dwg. XX of

Office of Construction and Facilities Management
Department of Veterans Affairs

VA FORM 08-6231

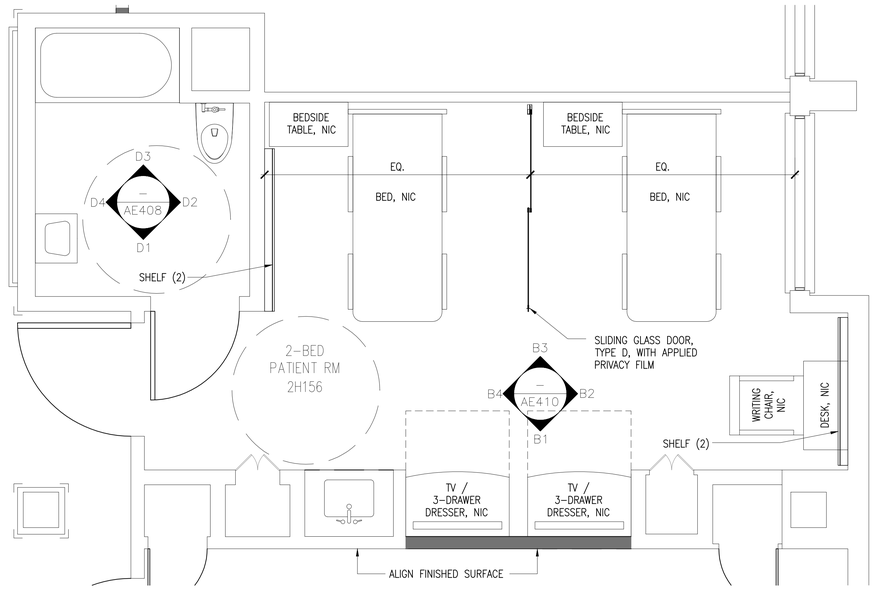

ENLARGED PLAN PATIENT ROOM 2H156 - H WING — B1

SCALE: 1/2"=1'-0" | REF:

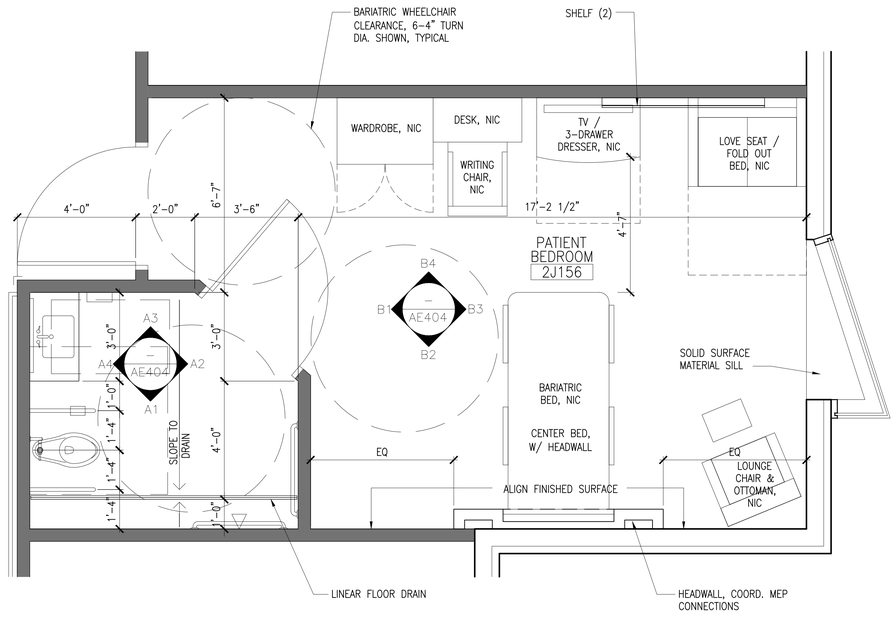

ENLARGED PLAN PATIENT TYP. ROOM 2J156 J WING ADDITION — D1

SCALE: 1/2"=1'-0" | REF:

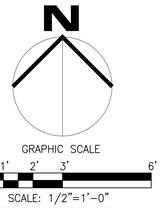

KEY PLAN

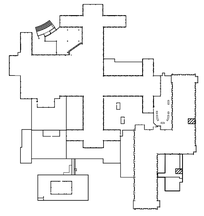

ISSUE FOR BIDDING	10/06/2015
Revisions:	Date

CONSULTANTS

LEO A DALY — PLANNING ARCHITECTURE ENGINEERING INTERIORS — 1201 Connecticut Ave NW Washington DC 20036 USA, Tel 202-861-4600, Fax 202-672-8530

EBL ENGINEERS, LLC — MECHANICAL · ELECTRICAL · FIRE PROTECTION — The Professional Engineering Center, 8005 Harford Road, Baltimore, Maryland 21234-5701, (410) 668-8000 Fax (410) 668-8001, e-mail: ebl@ebl-engineers.com, Fire Protection ~ Life Safety ~ Code Compliance

JMT JOHNSON, MIRMIRAN & THOMPSON — Engineering A Brighter Future — 72 Loveton Circle, Sparks, Maryland 21152, phone / 410.329.3100, fax / 410.472.2200

AMT LLC — PROFESSIONAL ENGINEERS & LAND SURVEYORS — 10 G STREET, NE, SUITE 430, WASHINGTON, DC, 20002, PH: (202) 289-4545, FAX: (202) 289-5051

DISTRICT OF COLUMBIA — KHALID I. BHATTI — 100943 — LICENSED ARCHITECT

ARCHITECT

MIMARCH — MIMAR ARCHITECTS, INC. — Architecture, Engineering, Design/Build, 7004 Security Blvd, Suite #210, Baltimore, MD 21244, Phone: 410-944-4900 Fax: 410-944-8044

Drawing Title: ENLARGED FLOOR PLANS

Project Title: ADDITION AND RENOVATION OF THE COMMUNITY LIVING CENTER

Approved: Project Director
APPROVED - BY - NAME
APPROVED - BY - TITLE/RANK
STATION - MANAGEMENT

Location: VAMC WASHINGTON, DC

Date	Checked	Drawn
APPROVED - DATE	BV	JC

Project Number: 688-400

Building Number: BUILDING #6

Drawing Number: AE-401

Dwg. XX of

Office of Construction and Facilities Management

Veterans Affairs — Palo Alto Health Care System

VA FORM 08-6231

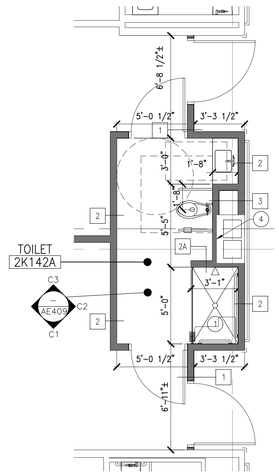

ENLARGED PLAN - TOILET 2K142A

SCALE: 1/4" = 1'-0" REF:

A4

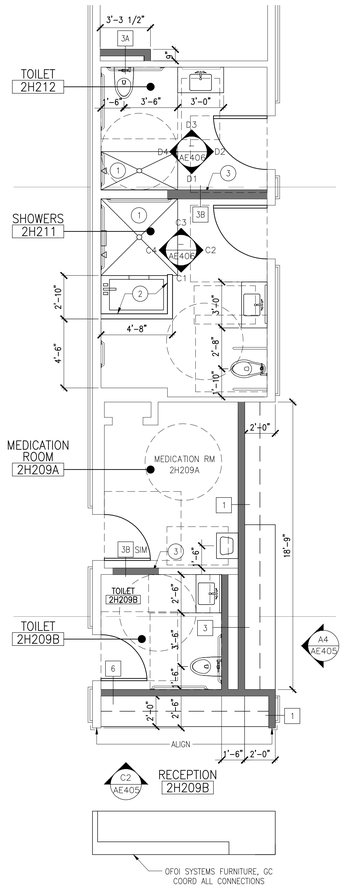

ENLARGED PLAN - H WING

SCALE: 1/4" = 1'-0" REF:

A3

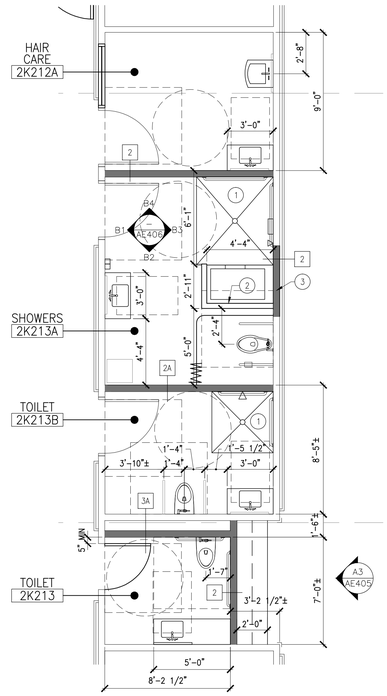

ENLARGED PLAN - K WING

SCALE: 1/4" = 1'-0" REF:

A2

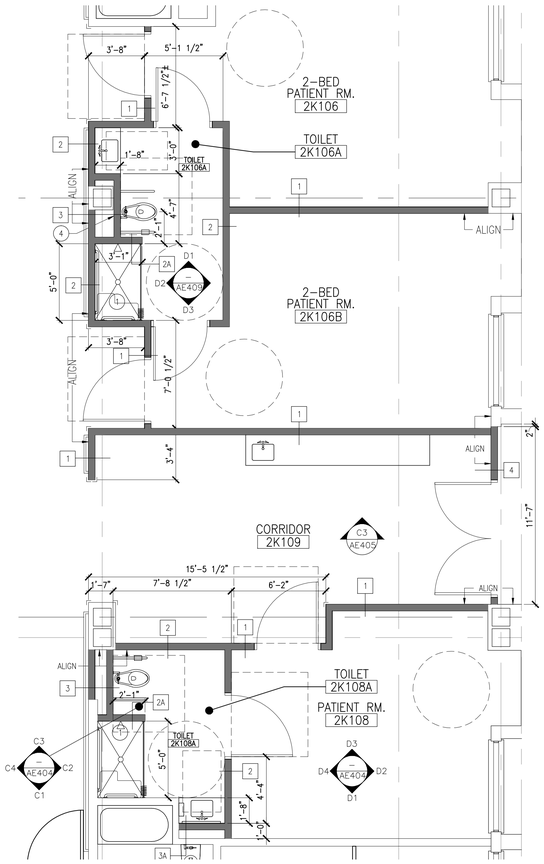

ENLARGED PLAN - K WING (NEW ADDITION)

SCALE: 1/4" = 1'-0" REF:

A1

NEW WORK GENERAL NOTES:

(APPLY TO THIS SHEET ONLY)

1. INSTALL SHEET FLOORING ALL PATIENT ROOMS.
2. REFER TO LARGE SCALE TOILET PLANS AND ELEVATIONS FOR EXTENT OF WORK.

NEW WORK KEYNOTES: (X)

(APPLY TO THIS SHEET ONLY)

1. REFER TO SHOWER RECESSED FLOOR DETAIL - XX/XXXX
2. REFER TO TUB WALL DETAIL - XX/XXXX
3. FIELD VERIFY AND INFILL PARTITION TO MATCH EXISTING PARTITION THICKNESS. PROVIDE FOR FINISHED FACES TO BE FLUSH WITH EXISTING BOTH SIDES.
4. FIELD VERIFY AND PROVIDE METAL FRAMING AND/OR FURRING AS NEEDED TO INFILL AROUND EXISTING COLUMN AND OTHER EXISTING FEATURES FOR NEW LAYOUT.

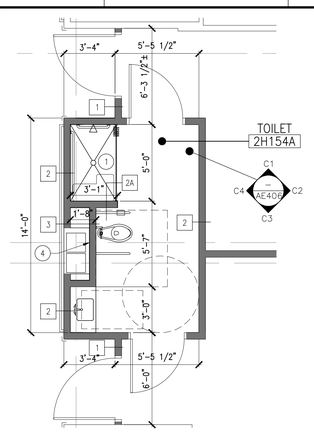

ENLARGED PLAN - TOILET 2H154A

SCALE: 1/4" = 1'-0" REF:

B4

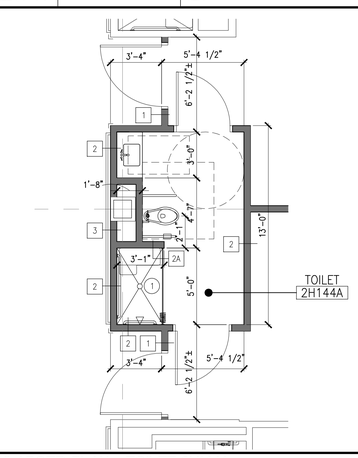

ENLARGED PLAN - TOILET 2H144A

SCALE: 1/4" = 1'-0" REF:

B3

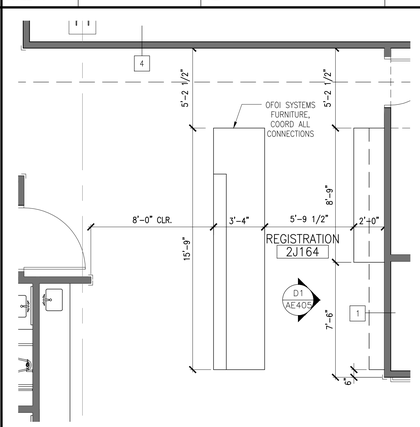

ENLARGED PLAN - REGISTRATION 2J164

SCALE: 1/4" = 1'-0" REF:

B2

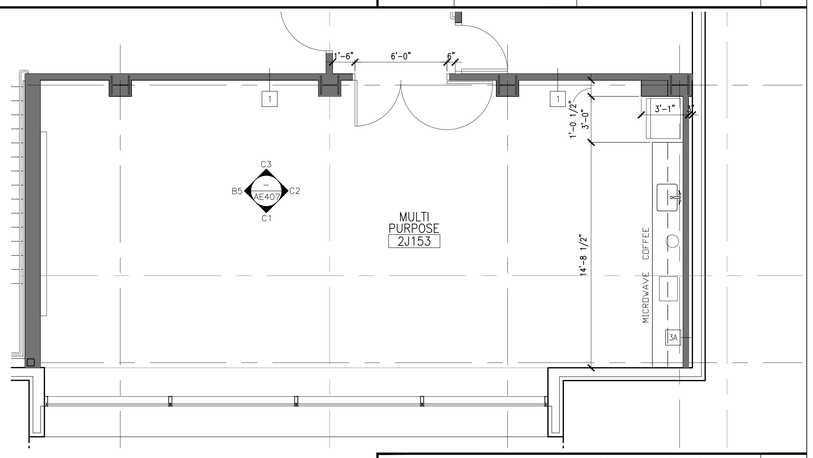

ENLARGED PLAN - MULTI PURPOSE RM. 2J153

SCALE: 1/4" = 1'-0" REF:

B1

GRAPHIC SCALE

0 2' 4' 6' 8' 12'

SCALE: 1/4"=1'-0"

ISSUE FOR BIDDING	10/06/2015
Revisions:	Date

CONSULTANTS

LEO A DALY
PLANNING ARCHITECTURE ENGINEERING INTERIORS
1201 Connecticut Ave NW Washington DC 20036 USA
Tel 202-861-4600 Fax 202-872-8530

EBL ENGINEERS, LLC
MECHANICAL • ELECTRICAL • FIRE PROTECTION
The Professional Engineering Center
8005 Harford Road, Baltimore, Maryland 21234-5701
(410) 668-8000 FAX (410) 668-8001
e-mail: ebl@eblengineers.com
Fire Protection = Life Safety = Code Compliance

JMT JOHNSON, MIRMIRAN & THOMPSON
Engineering A Brighter Future
72 Loveton Circle
Sparks, Maryland 21152
phone / 410.329.3100
fax / 410.472.2200

AMT LLC
PROFESSIONAL ENGINEERS & LAND SURVEYORS
10 G STREET, NE, SUITE 430
WASHINGTON, DC, 20002
PH: (202) 289-4545
FAX: (202) 289-5051

DISTRICT OF COLUMBIA
KHALID I. BHATTI
100943
LICENSED
ARCHITECT

ARCHITECT

MIMARCH

MIMAR ARCHITECTS, INC.
Architecture, Engineering, Design/Build
7004 Security Blvd, Suite #210
Baltimore, MD 21244
Phone: 410-944-4900 Fax: 410-944-8044

Drawing Title
ENLARGED FLOOR PLANS

Approved: Project Director
APPROVED - BY - NAME
APPROVED - BY - TITLE/RANK
STATION - MANAGEMENT

Project Title
ADDITION AND RENOVATION OF THE COMMUNITY LIVING CENTER

Location
VAMC WASHINGTON, DC

Date	Checked	Drawn
APPROVED - DATE	BV	JC

Project Number
688-400

Building Number
BUILDING #6

Drawing Number
AE-402

Dwg. XX of

Office of Construction and Facilities Management

Veterans Affairs Palo Alto Health Care System

VA FORM 08-6231

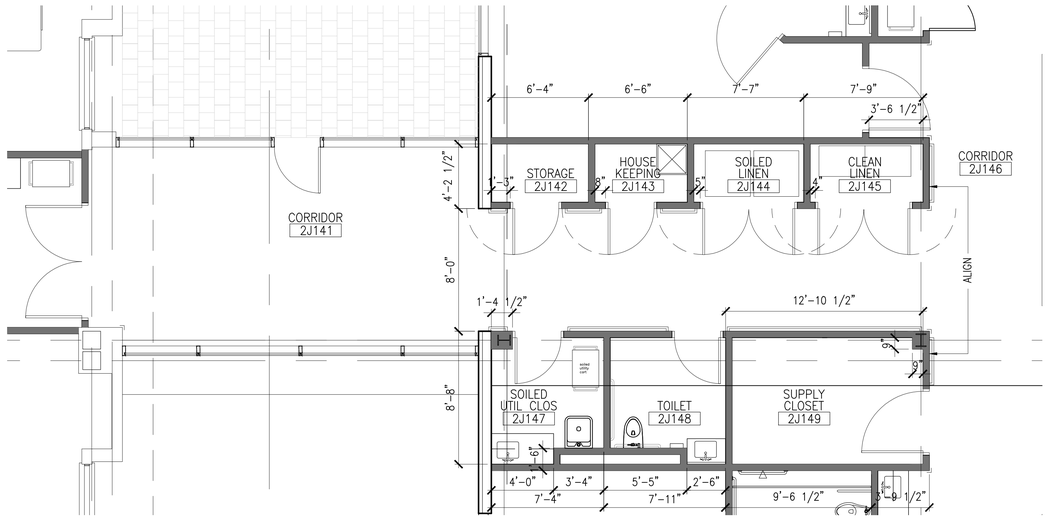

ENLARGED PLAN - J WING

SCALE: 1/4"=1'-0" | REF:

B1

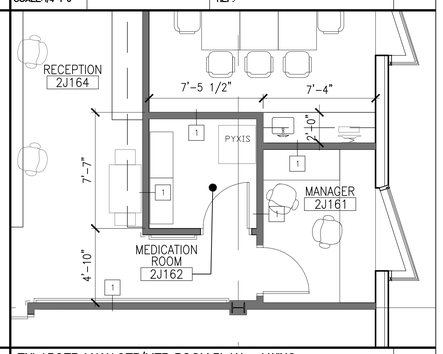

ENLARGED MANAGER/MED ROOM PLAN - J WING

SCALE: 1/4"=1'-0" | REF:

C1

GRAPHIC SCALE
0 6" 1' 2' 3' 6'
SCALE: 1/2"=1'-0"

ISSUE FOR BIDDING	10/06/2015
Revisions:	Date

CONSULTANTS

LEO A DALY
PLANNING ARCHITECTURE ENGINEERING INTERIORS
1201 Connecticut Ave NW Washington DC 20036 USA
Tel 202-861-4600 Fax 202-872-8530

EBL ENGINEERS, LLC
MECHANICAL • ELECTRICAL • FIRE PROTECTION
The Professional Engineering Center
8005 Harford Road, Baltimore, Maryland 21234-5701
(410) 668-8000 FAX (410) 668-8001
e-mail: ebl@eblengineers.com
Fire Protection - Life Safety - Code Compliance

JMT JOHNSON, MIRMIRAN & THOMPSON
Engineering A Brighter Future
72 Loveton Circle
Sparks, Maryland 21152
phone / 410.329.3100
fax / 410.472.2200

AMT LLC
PROFESSIONAL ENGINEERS & LAND SURVEYORS
10 G STREET, NE, SUITE 430
WASHINGTON, DC, 20002
PH: (202) 289-4545
FAX: (202) 289-5051

DISTRICT OF COLUMBIA
KHALID I. BHATTI
100943
LICENSED
ARCHITECT

ARCHITECT

MIMARCH

MIMAR ARCHITECTS, INC.
Architecture, Engineering, Design/Build
7004 Security Blvd, Suite #210
Baltimore, MD 21244
Phone: 410-944-4900 Fax: 410-944-8044

Drawing Title
ENLARGED FLOOR PLANS

Approved: Project Director
APPROVED - BY - NAME
APPROVED - BY - TITLE/RANK
STATION - MANAGEMENT

Project Title
ADDITION AND RENOVATION OF THE COMMUNITY LIVING CENTER

Location
VAMC WASHINGTON, DC

Date	Checked	Drawn
APPROVED - DATE	BV	JC

Project Number
688-400

Building Number
BUILDING #6

Drawing Number
AE-403

Dwg. XX of

Office of Construction and Facilities Management

Veterans Affairs Palo Alto Health Care System

VA FORM 08-6231