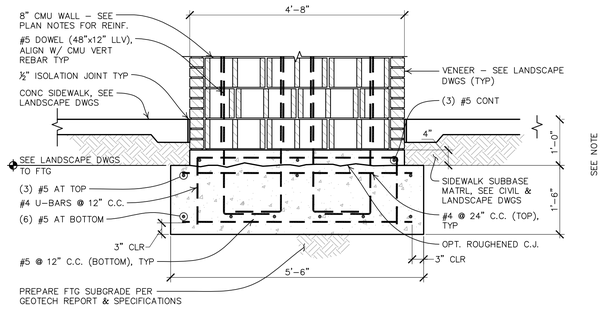

C1 S-101 WALL SECTION
SCALE: 3/4" = 1'-0"

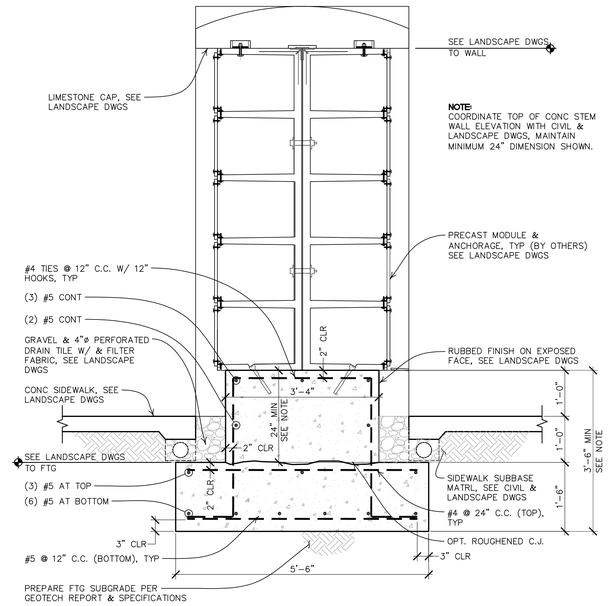

C4 S-101 WALL SECTION
SCALE: 3/4" = 1'-0"

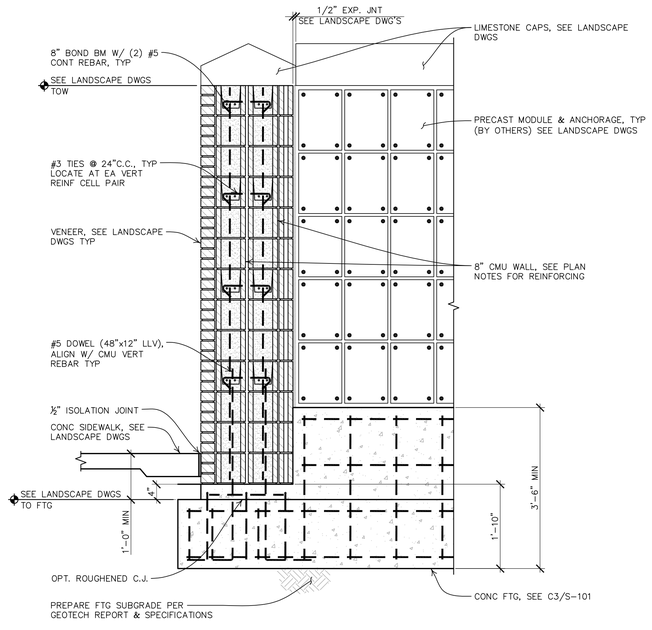

F4 S-101 WALL SECTION
SCALE: 3/4" = 1'-0"

GENERAL PLAN NOTES

- SEE SHEET S-001 FOR GENERAL STRUCTURAL NOTES.
- VERIFY ALL DIMENSIONS & ELEVATIONS WITH LANDSCAPE & CIVIL DRAWINGS BEFORE CONSTRUCTION COMMENCES.

FOUNDATION PLAN NOTES

- CENTERLINE OF FOOTING SHALL COINCIDE WITH THE FOUNDATION WALL CENTERLINE UNLESS SHOWN OTHERWISE.
- BACKFILL & COMPACT BOTH SIDES OF FOUNDATION WALLS SIMULTANEOUSLY.
- 8" CMU WALLS SHALL BE GROUTED SOLID AND REINFORCED WITH (1) #5 VERTICAL REBAR AT 16" C.C., PLUS (1) ADDITIONAL #5 VERTICAL REBAR AT ALL CORNERS. IN ADDITION, PROVIDE THE FOLLOWING HORIZONTAL REINFORCING:
  - CONTINUOUS 8" BOND BEAM WITH (2) #5 AT 24" C.C.
  - GAUGE DURO-WALL JOINT REINFORCING AT 8" C.C. (MAX)
  - #3 CROSS TIES AT 24" C.C. AT 16" C.C. AND AT ENDS OF WALLS

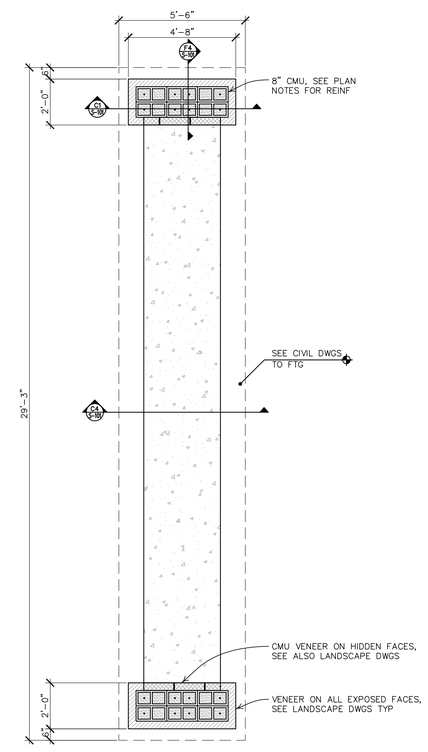

COLUMBARIUM FOUNDATION PLAN
SCALE: 3/8" = 1'-0"

BID DOCUMENTS

Revisions:	Date

CONSULTANTS:

Terracon
Consulting Engineers and Scientists
110 12th St. North
Birmingham, AL 35203
p (205) 942-1289
f (205) 443-5302

SHILLENBURGER SURVEYING COMPANY, P.A.

PEAKS TO PLAINS DESIGN
LANDSCAPE ARCHITECTURE/PLANNING/CIVIL ENGINEERING
404 NORTH 31ST STREET, SUITE 405
BILLINGS, MONTANA 59101
(406) 294-9499 - (406) 294-9970 FAX
WWW.PEAKSTOPLAINS.COM

Aqua Engineering Inc.
Innovative Water Solutions
375 E. Horsetooth Road, Building 3-20
Fort Collins, CO 80525-3196
970.226.9500 office
970.226.3805 fax
www.aquaengineering.com
3202 W. MAIN, SUITE C
RAPID CITY, SOUTH DAKOTA 57702
605.343.9606
Albertson Engineering Inc.

REGISTERED PROFESSIONAL ENGINEER
REG. NO. 6041
DAVID E. LEWIS
SOUTH DAKOTA
7/22/16

ARCHITECT/ENGINEERS:

FOURFRONT DESIGN INC.
517 7th street
rapid city sd
57701
p 605.342.9470
f 605.342.2377
www.4front.biz

Drawing Title
COLUMBARIUM FOUNDATION PLAN AND SECTIONS

Approved Project Director

Project Title
SALISBURY NATIONAL CEMETERY GRAVESITE EXPANSION

Location SALISBURY NATIONAL CEMETERY SALISBURY, NC

Date	Checked	Drawn
7/22/16	DEL	JRK

Project Number 876CM3021
Building Number N/A
Drawing Number S-101
Dwg. 55 of 63

NCA DESIGN AND CONSTRUCTION SERVICE
Department of Veterans Affairs

VA FORM 08-6231