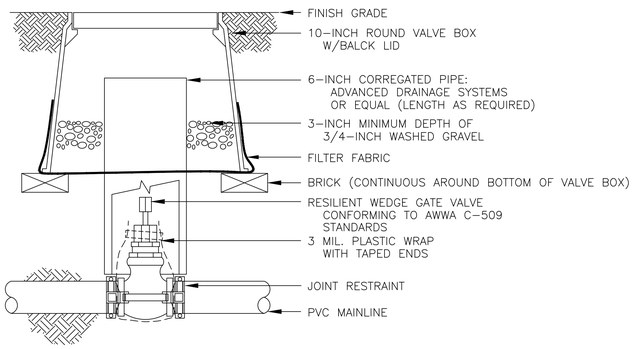

NOTES:
1. NOMINAL SIZE OF GATE VALVE TO MATCH NOMINAL MAINLINE SIZE.
2. RESILIENT WEDGE GATE VALVE MAY HAVE EITHER MECHANICAL JOINT OR PUSH-ON GASKETED ENDS. THE OPERATOR IS A WRENCH NUT.
3. INSTALL FILTER FABRIC AROUND EXTERIOR OF VALVE BOX. USE DUCT TAPE TO SECURE FABRIC TO PIPE AND VALVE BOX.
4. BRAND VALVE BOX LID PER SPECIFICATIONS.
5. SUBMAIN ISOLATION: USE CONCENTRIC REDUCERS WITH JOINT RESTRAINTS ON DOWNSTREAM SIDE OF 3-INCH GATE VALVE TO MATCH SUBMAINLINE PIPE SIZE.

A2 / I-102 ISOLATION GATE VALVE ASSEMBLY

NOT TO SCALE

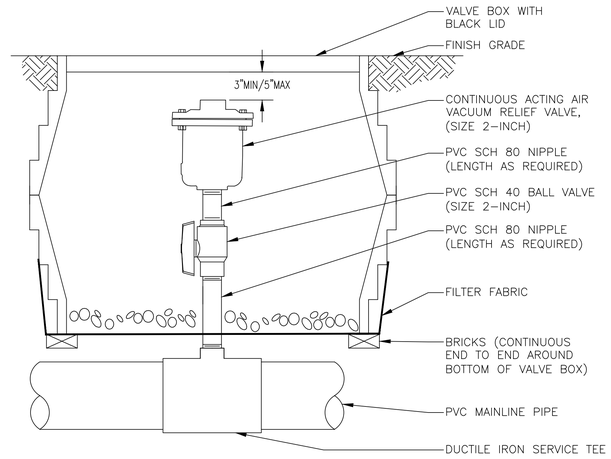

NOTES:
1. INSTALL VALVE BOX SO THERE IS A CLEARANCE OF 2" BETWEEN THE BOTTOM OF THE VALVE BOX AND THE MAINLINE PIPE.
2. INSTALL FILTER FABRIC AROUND EXTERIOR OF VALVE BOX. USE DUCT TAPE TO SECURE FABRIC TO PIPE AND VALVE BOX.
3. BRAND VALVE BOX LID PER SPECIFICATIONS.

B2 / I-102 AIR VACUUM RELIEF VALVE ASSEMBLY

NOT TO SCALE

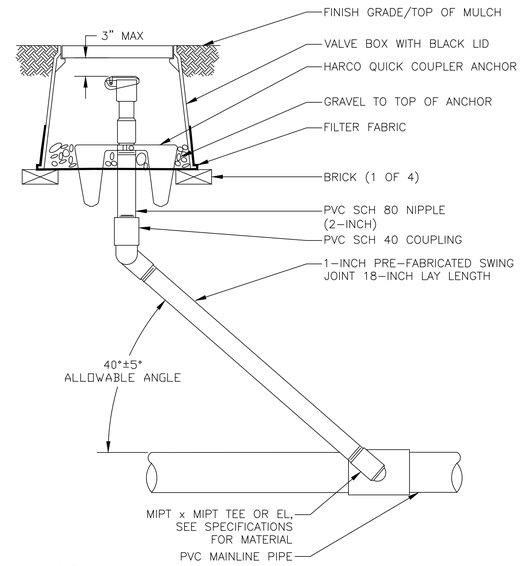

NOTES:
1. FURNISH FITTINGS AND PIPING NOMINALLY SIZED IDENTICAL TO NOMINAL QUICK COUPLING VALVE INLET SIZE.
2. INSTALL SWING JOINT LAY ARM BETWEEN 30° AND 45° OF LATERAL PIPE IN ORDER TO ABSORB DOWNWARD IMPACT. IF SWING JOINT CAN NOT BE INSTALLED AT SPECIFIED ANGLE, CONSULT RESIDENT ENGINEER PRIOR TO INSTALLATION OF SWING JOINT.
3. BRAND VALVE BOX LID PER SPECIFICATIONS.

E2 / I-102 QUICK COUPLING VALVE ASSEMBLY

NOT TO SCALE

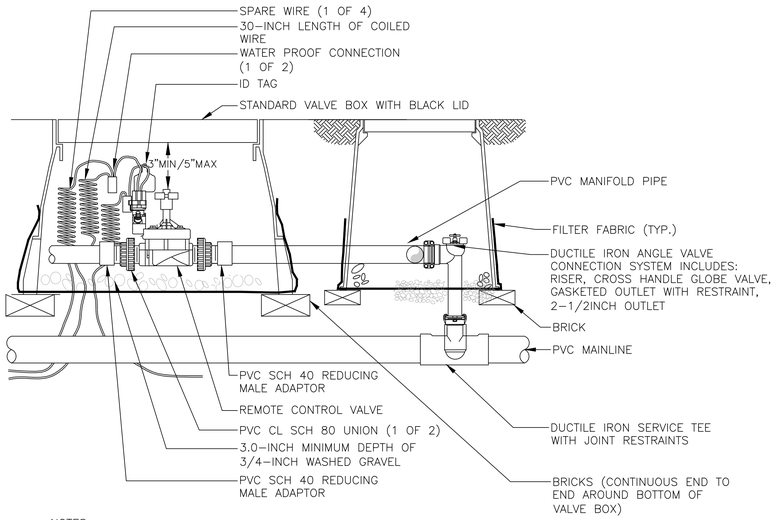

NOTES:
1. USE VALVE BOX EXTENSION AS NECESSARY TO ACHIEVE MINIMUM DIMENSIONS ABOVE ASSEMBLY.
2. NOMINAL SIZE OF ALL COMPONENTS ARE TO BE THE SAME NOMINAL SIZE AS THE SOLENOID VALVE (SIZED AS SHOWN).
3. TRANSITION TO PROPER LATERAL PIPE BURIAL DEPTH USING PVC SCH 40 SOLVENT WELD FITTINGS DOWNSTREAM OF REMOTE CONTROL VALVE ASSEMBLY.
4. INSTALL PRESSURE REGULATOR ON ALL REMOTE CONTROL VALVES. SET PRESSURE MODULE TO INDICATED PRESSURE ON LEGEND PER MANUFACTURER'S RECOMMENDATIONS. 5. INSTALL FILTER FABRIC AROUND EXTERIOR OF VALVE BOX. USE DUCT TAPE TO SECURE FABRIC TO PIPE AND VALVE BOX.
6. BRAND VALVE BOX LID PER SPECIFICATIONS.
7. DO NOT ALLOW VALVE BOX SIDES TO REST ON PIPE.
8. INSTALL FILTER FABRIC AROUND EXTERIOR OF VALVE BOX. USE DUCT TAPE TO SECURE FABRIC TO PIPE AND VALVE BOX.

E2 / I-102 REMOTE CONTROL VALVE ASSEMBLY

NOT TO SCALE

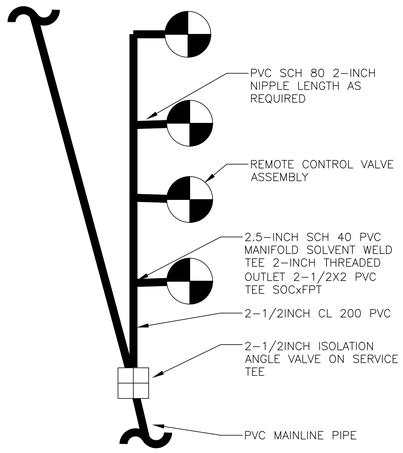

FOR MANIFOLDS:
1. SPACE VALVES A UNIFORM DISTANCE APART.
2. USE MANUFACTURER'S RECOMMENDED TORQUE ON RESTRAINTS. A CALIBRATED TORQUE BAR WILL BE REQUIRED AND CALIBRATION TESTING RESULTS WILL BE AVAILABLE UPON REQUEST.
3. NO MORE THAN 4 REMOTE CONTROL VALVES MAY BE ON THE SAME ISOLATION MANIFOLD.
4. VALVES ON A SINGLE MANIFOLD SHOWN GRAPHICALLY ON DRAWINGS.
5. USE SWIVEL EL TO MINIMIZE THE AMOUNT OF FITTINGS FOR CHANGES OF DIRECTION.

BID DOCUMENTS

Revisions:	Date

CONSULTANTS:

Terracon — Consulting Engineers and Scientists, 110 12th St. North, Birmingham, AL 35203, p (205) 942-1289, f (205) 443-5302

Shilleabarger Surveying Company, P.A.

PEAKS TO PLAINS DESIGN — LANDSCAPE ARCHITECTURE/PLANNING/CIVIL ENGINEERING, 404 NORTH 31ST STREET, SUITE 405, BILLINGS, MONTANA 59101, (406) 294-9499 - (406) 294-9670 FAX, WWW.PEAKSTOPLAINS.COM

Aqua Engineering Inc. — Innovative Water Solutions, 3016 E. Horsetooth Road, Building D-202, Fort Collins, CO 80525-2198, (970) 226-0688 office, (970) 226-0689 fax, www.aquaengineering.com

Albertson Engineering Inc. — 3202 West Main, Suite C, Rapid City, South Dakota 57702, phone 605.343.9606 fax 605.341.7395

JOHN D. LEONARD — Certified Irrigation Designer, IRRIGATION ASSOCIATION, 46102, 6/19/2016

ARCHITECT/ENGINEERS:

4 FRONT DESIGN INC. — 517 7th street, rapid city sd 57701, p 605.342.9470, f 605.342.2377, www.4front.biz

Drawing Title: IRRIGATION DETAILS	Project Title: SALISBURY NATIONAL CEMETERY GRAVESITE EXPANSION		Project Number: 876CM3021
			Building Number: N/A
Approved: Project Director	Location: SALISBURY NATIONAL CEMETERY, SALISBURY, NC		Drawing Number: I-104
	Date: 7/22/16	Checked: RWB	Drawing 61 of 63
		Drawn: JDL	

NCA DESIGN AND CONSTRUCTION SERVICE

Department of Veterans Affairs

VA FORM 08-6231

90% CONSTRUCTION DOCUMENTS