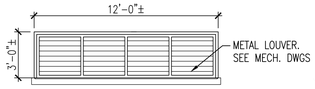


11 ATTIC LOUVER ELEVATION
A504 1/4" = 1'-0"

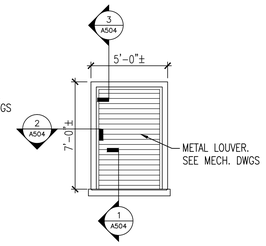


9 LOUVER ELEVATION AT BASEMENT LEVEL
A504 1/4" = 1'-0"

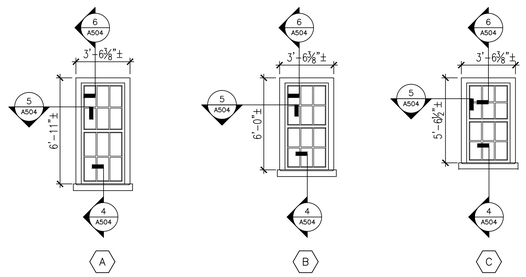


10 WINDOW SCHEDULE
A504 1/4" = 1'-0"

NOTE:
NEW WINDOWS TO MATCH EXISTING WINDOWS.
SEE FLOOR PLAN FOR LOCATION

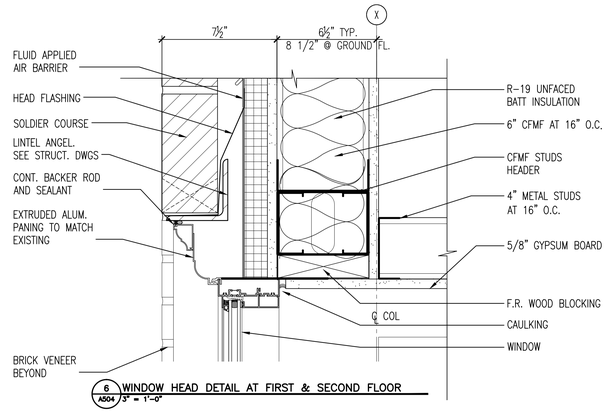


6 WINDOW HEAD DETAIL AT FIRST & SECOND FLOOR
A504 3" = 1'-0"

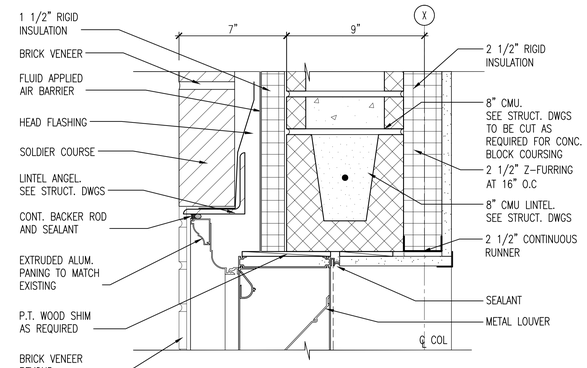


3 LOUVER HEAD DETAIL AT BASEMENT
A504 3" = 1'-0"

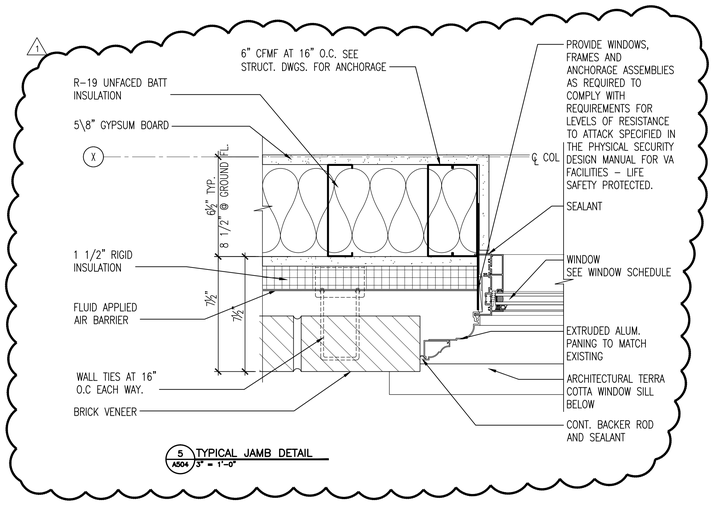


5 TYPICAL JAMB DETAIL
A504 3" = 1'-0"

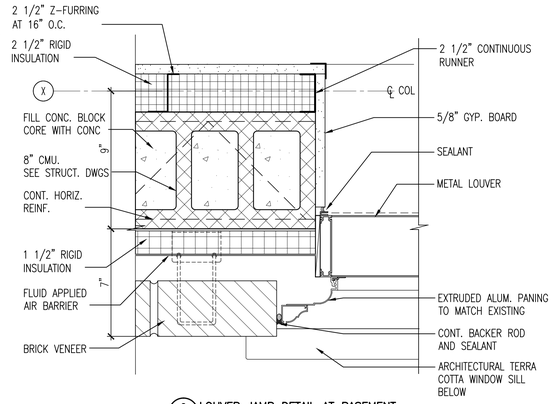


2 LOUVER JAMB DETAIL AT BASEMENT
A504 3" = 1'-0"

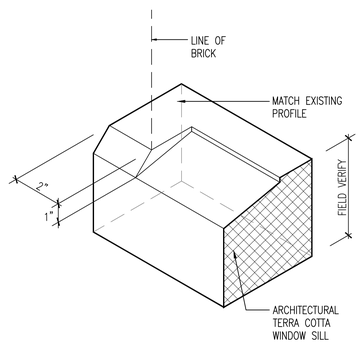


7 ISOMETRIC AT WINDOW SILL
A504 3" = 1'-0"

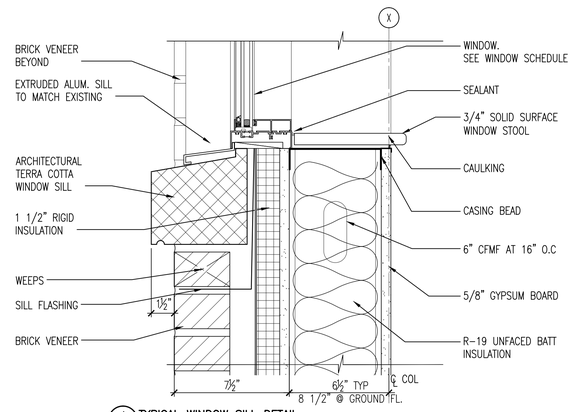


4 TYPICAL WINDOW SILL DETAIL
A504 3" = 1'-0"

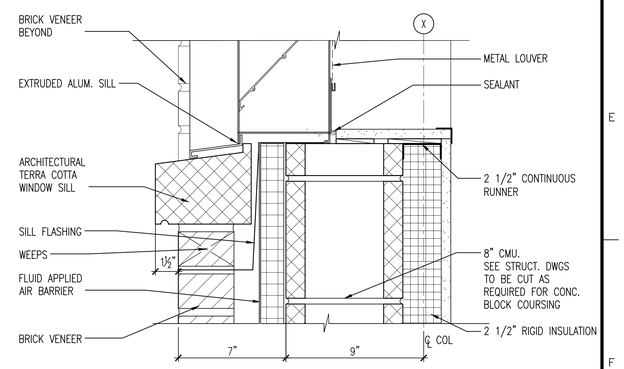


1 LOUVER SILL DETAIL AT BASEMENT
A504 3" = 1'-0"

| REVISION 1 | 8/23/2016 |
|---|---|
| Revisions: | Date |

CONSULTANTS:

ARCHITECT:

TOLAND MIZELL MOLNAR

590 Means Street, NW, Ste.200
Atlanta, GA 30318
404.214.9774

Drawing Title: WINDOW SCHEDULE AND DETAILS

Approved: Chief Engineer

Project Title: EXPAND OUTPATIENT CLINIC SERVICES

Location: TUSCALOOSA AL.

Date: 01-22-2016 | Checked: DM | Drawn:

01/22/2016 DOCUMENTS

Project Number: 679-315

Building Number: 38

Drawing Number: A504

Dwg. 67 of 187

OFFICE OF CONSTRUCTION AND FACILITIES MANAGEMENT

Department of Veterans Affairs

VA FORM 08-6231

Plotted by: mcunningham
Plotted Date: Aug 23, 2016 – 2:08pm