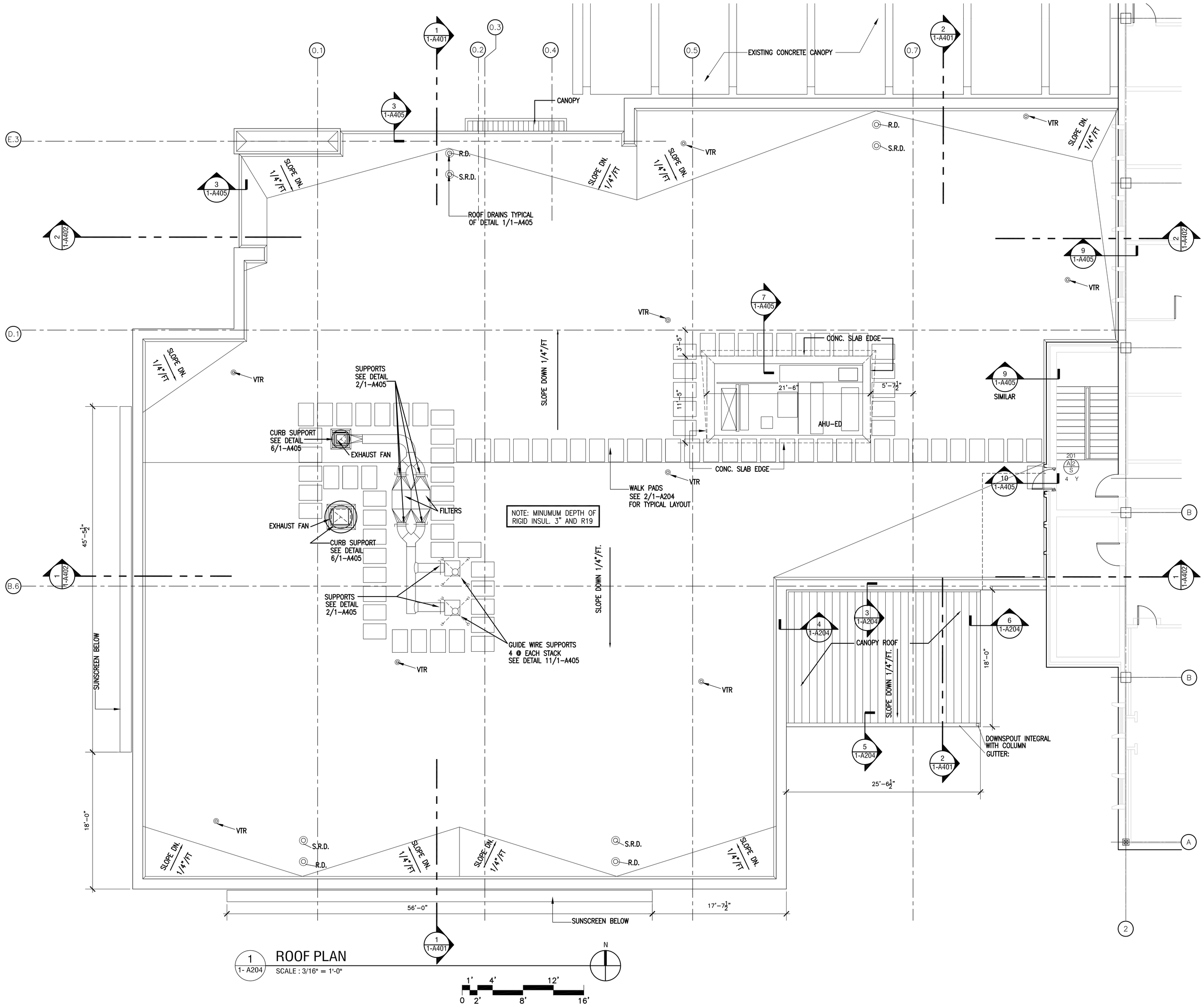

1 / 1-A204 **ROOF PLAN**
SCALE : 3/16" = 1'-0"

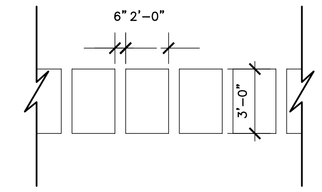

2 / 1-A204 **WALK PAD LAYOUT**
SCALE : 1/4" = 1'-0"

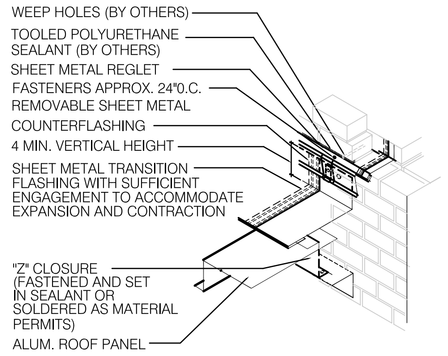

3 / 1-A204 **CANOPY DETAIL**
SCALE : N.T.S

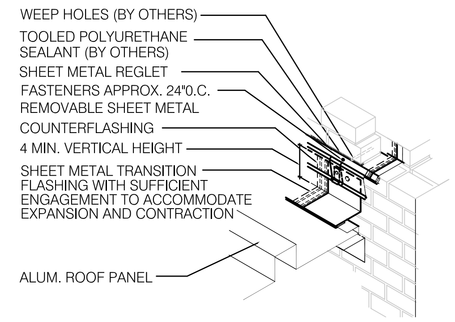

4 / 1-A204 **CANOPY DETAIL**
SCALE : N.T.S

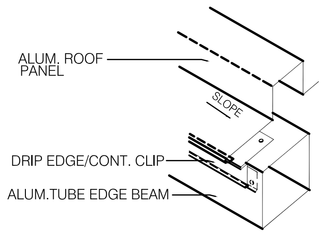

5 / 1-A204 **CANOPY DETAIL**
SCALE: N.T.S

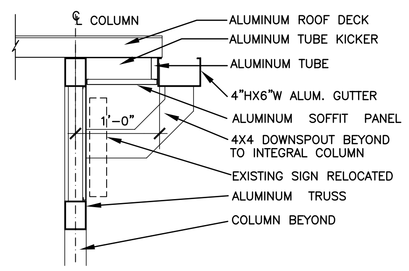

DETAILS ARE SHOWN FOR DESIGN INTENT. FINAL DETAILS AND STRUCTURAL CALCULATIONS PROVIDED BY CANOPY MANUFACTURER

6 / 1-A204 **CANOPY DETAIL**
SCALE : 1"=1'-0"

GENERAL NOTES

1. FOR TYPICAL ROOF DRAINING DETAIL SEE 1/1-A405
2. FOR TYPICAL VTR VENT DETAIL SEE 8/1-A405
3. FOR TYPICAL GUIDE WIRE SUPPORT DETAIL SEE 8/1-A405
4. FOR TYPICAL SUPPORT CURB DETAIL SEE 2/1-A405
5. FOR TYPICAL MECHANICAL CURB DETAIL SEE 6/1-A405
6. FOR LIGHTENING PROTECTION SEE SHEETS 1-E205 AND 1-E304

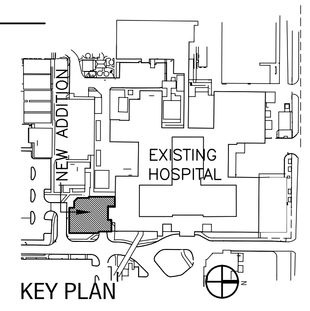

KEY PLAN

Revisions	Date
RECORD DRAWING, NO CORRECTIONS	05-22-08
Issued for Bld	01-28-05

DRAWING NAME: PLOTTED SCALE: 1:1 DATE / TIME: PLOTEED: 7-08-04

RECORD DRAWING 05/22/08

DISCLAIMER:
THIS RECORD DRAWING HAS BEEN PREPARED BY THE DESIGN PROFESSIONAL BASED UPON INFORMATION FURNISHED BY OTHERS. THE DESIGN PROFESSIONAL CANNOT ASSURE ITS ACCURACY, AND THUS IS NOT RESPONSIBLE FOR THE ACCURACY OF THIS RECORD DRAWING OR FOR ANY ERRORS OR OMISSIONS WHICH HAVE BEEN INCORPORATED INTO IT AS A RESULT. THOSE RELYING ON THIS RECORD DOCUMENT ARE ADVISED TO OBTAIN INDEPENDENT VERIFICATION OF ITS ACCURACY BEFORE APPLYING IT FOR ANY PURPOSE.

VOA PROJECT NO. 3590C.00

VOA ASSOCIATES INCORPORATED
4776 NEW BROAD STREET SUITE 200
ORLANDO, FLORIDA 32814
PHONE: (407) 425-2500
FAX: (407) 648-4275
architecture + planning + interior design

SEAL AREA

Approved:
Chief, FMS;
Chief of Projects;
Chief of Safety;
Chief of Staff;
ED Director;
Infection Control

Drawing Title: ROOF PLAN
Approved: Division Chief
Approved: Service Director

Project Title: JAMES A HALEY VA HOSPITAL DESIGN EMERGENCY ROOM PH-1
Building Number: 1
Checked: CO
Drawn: DM
Location: TAMPA, FL

Date: 08-05-04
Project No. 673-318
DRAWING NO. 1-A204
Dwg. of 95

Office of Facilities
Department of Veterans Affairs

VA FORM 08-6231, DEC 1989
U.S. GOVERNMENT PRINTING OFFICE: 1983-400-285