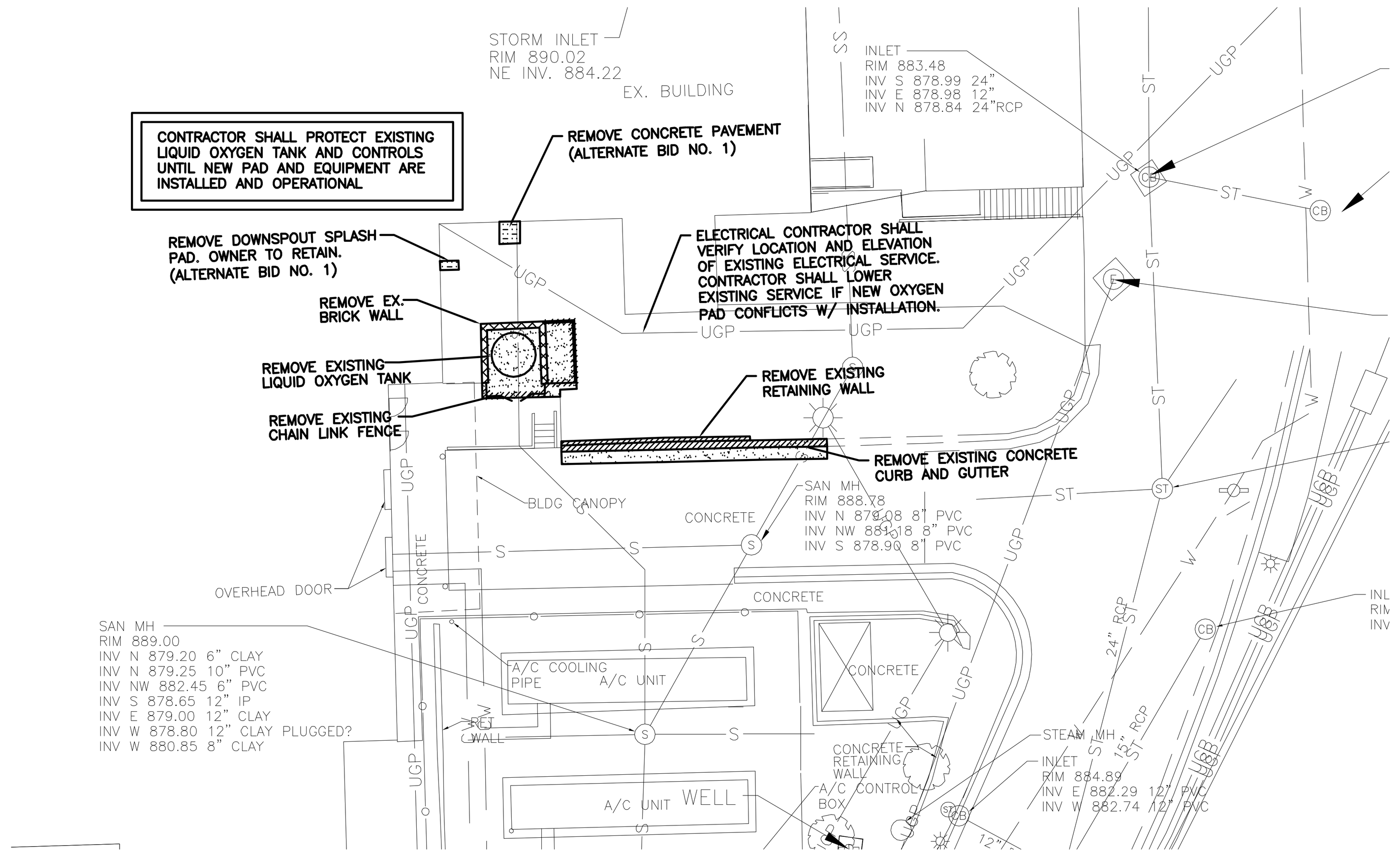

CIVIL DEMOLITION PLAN

SCALE: 1" = 20'-0"

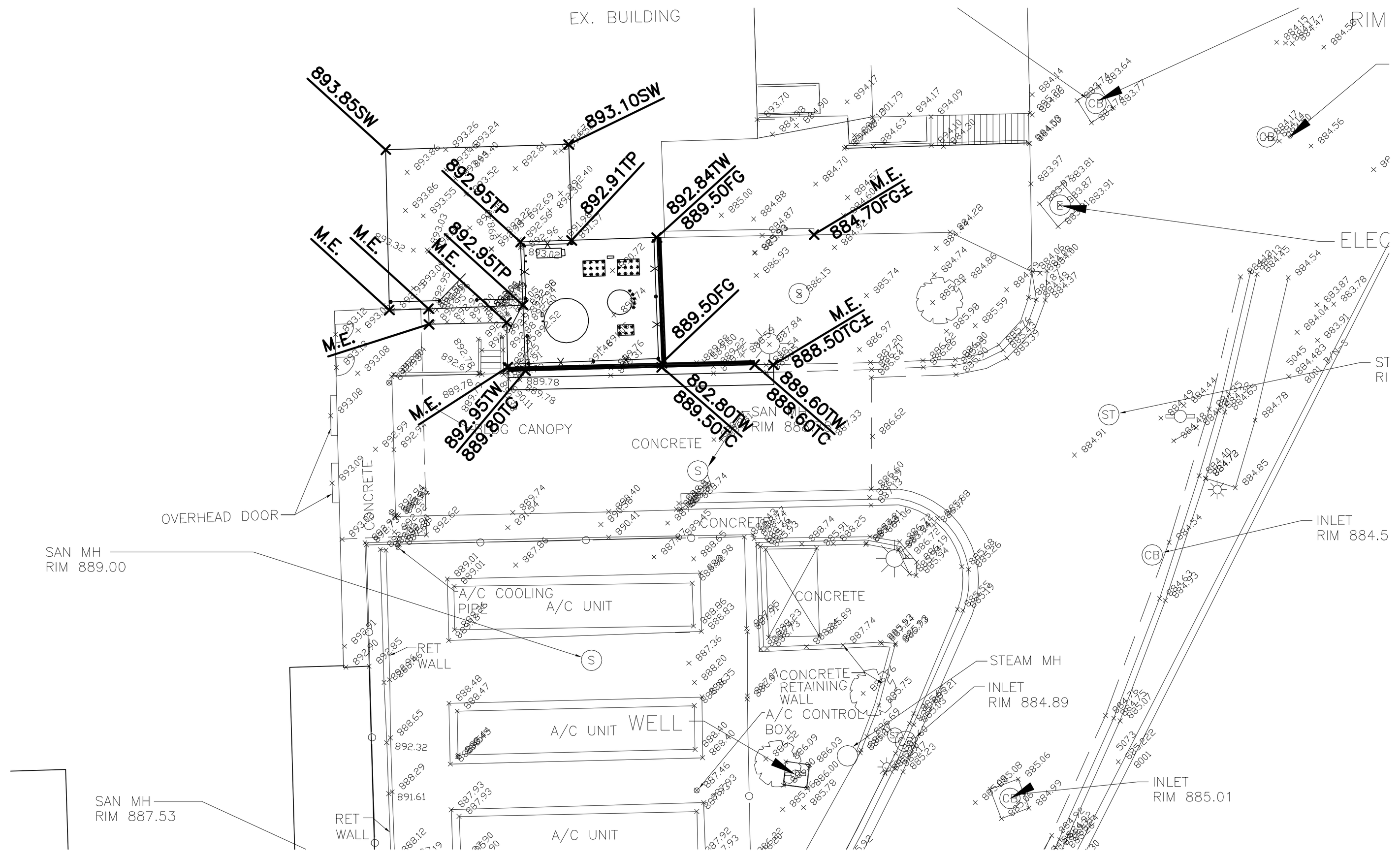

CIVIL GRADING PLAN

SCALE: 1" = 20'-0"

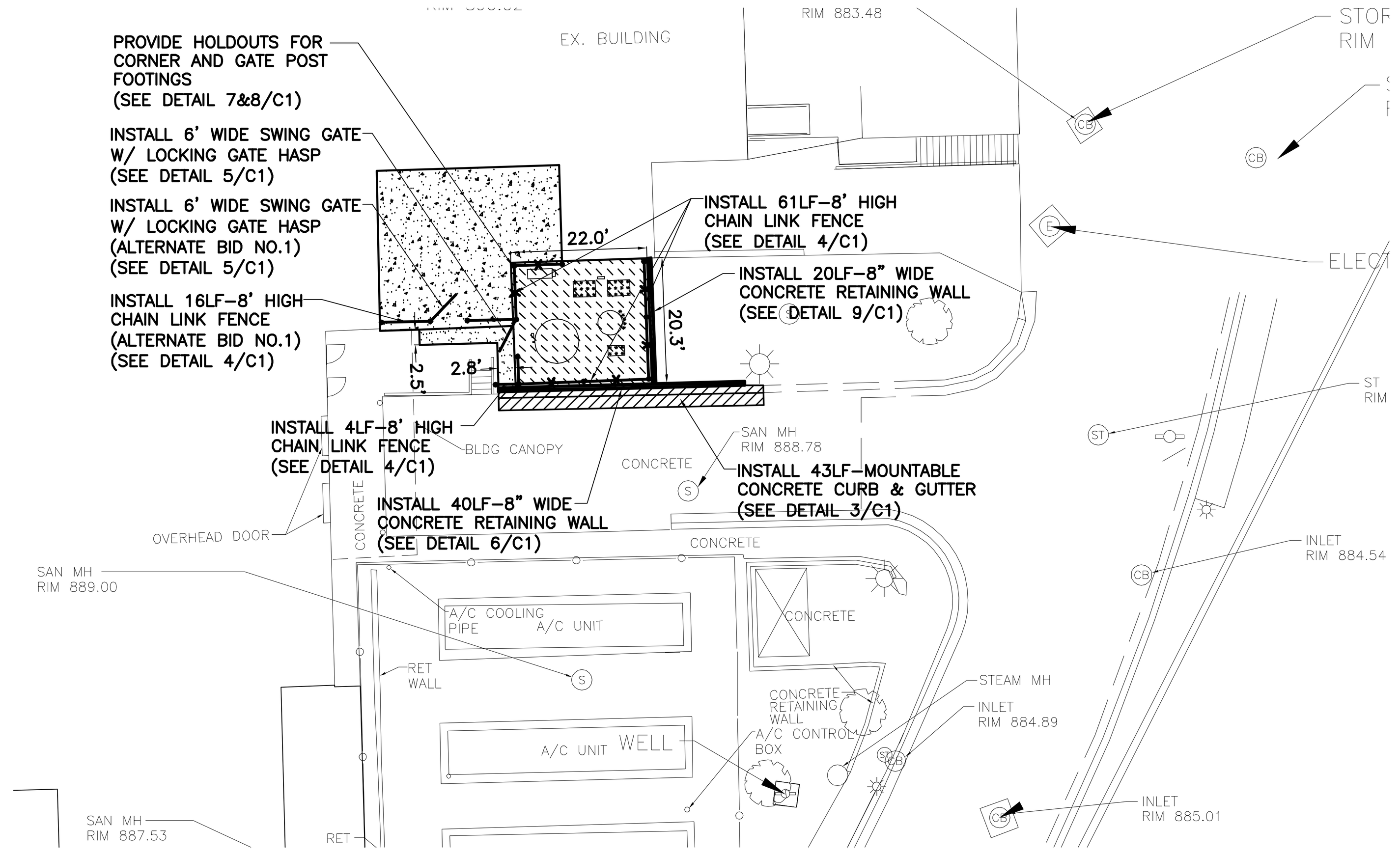

CIVIL PAVING PLAN

SCALE: 1" = 20'-0"

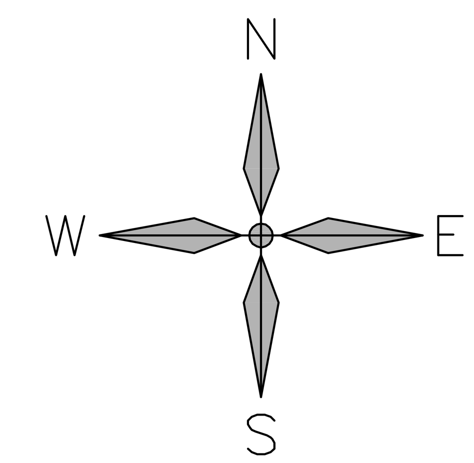

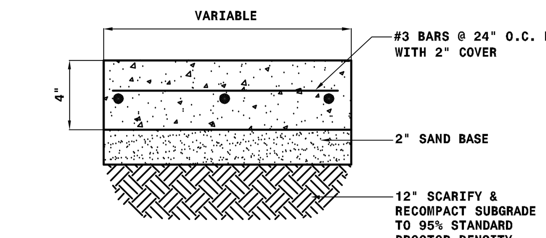

1 / C1 4" REINFORCED CONCRETE SIDEWALK DETAIL
NOT-TO-SCALE

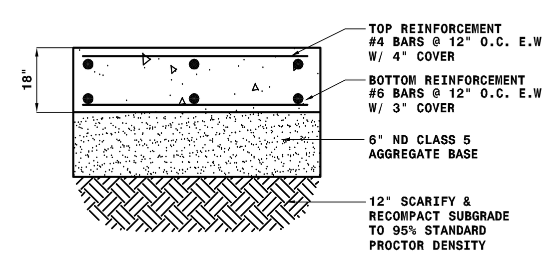

2 / C1 18" REINFORCED CONCRETE PAVEMENT DETAIL
NOT-TO-SCALE

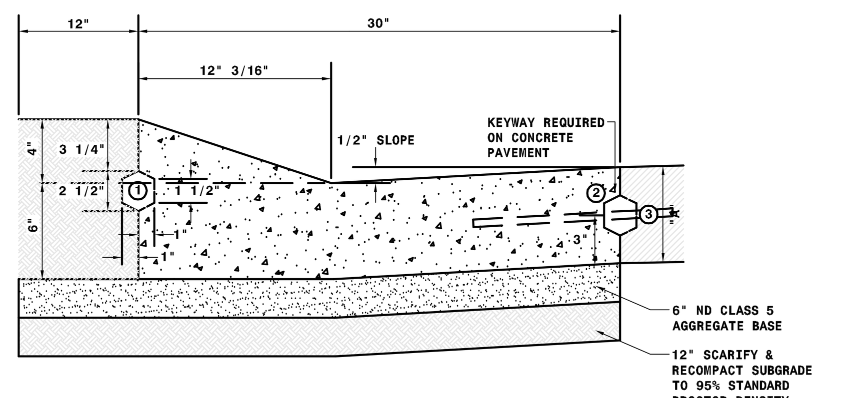

TYPE I MOUNTABLE CURB & GUTTER

① NOTE:
1. MALE KEYWAY REQUIRED FOR EXTRUDED CURB CONSTRUCTION
2. FEMALE KEYWAY FOR USE WITH FORMS (INDICATED WITH DASHED LINES)
3. PLACE DUMMY JOINT TO MATCH PANEL SPACING FOR CONCRETE PAVEMENT.

② NOTE:
1. 1/2" x 18" DEFORMED BARS AT 30" O.C. & KEYWAY REQUIRED WHEN SEPARATE CURB IS INSTALLED WITH CONCRETE PAVING
2. 1" EXPANSION JOINTS TO MATCH EXPANSION JOINTS ON CONCRETE PAVEMENT.

③ NOTE:
1. DIMENSION "A" SHALL MATCH THE THICKNESS OF THE ADJOINING PAVEMENT WITH EITHER INTEGRAL OR SEPERATE CURB

3 / C1 (TYPE I) MOUNTABLE CONCRETE CURB AND GUTTER DETAIL
NOT-TO-SCALE

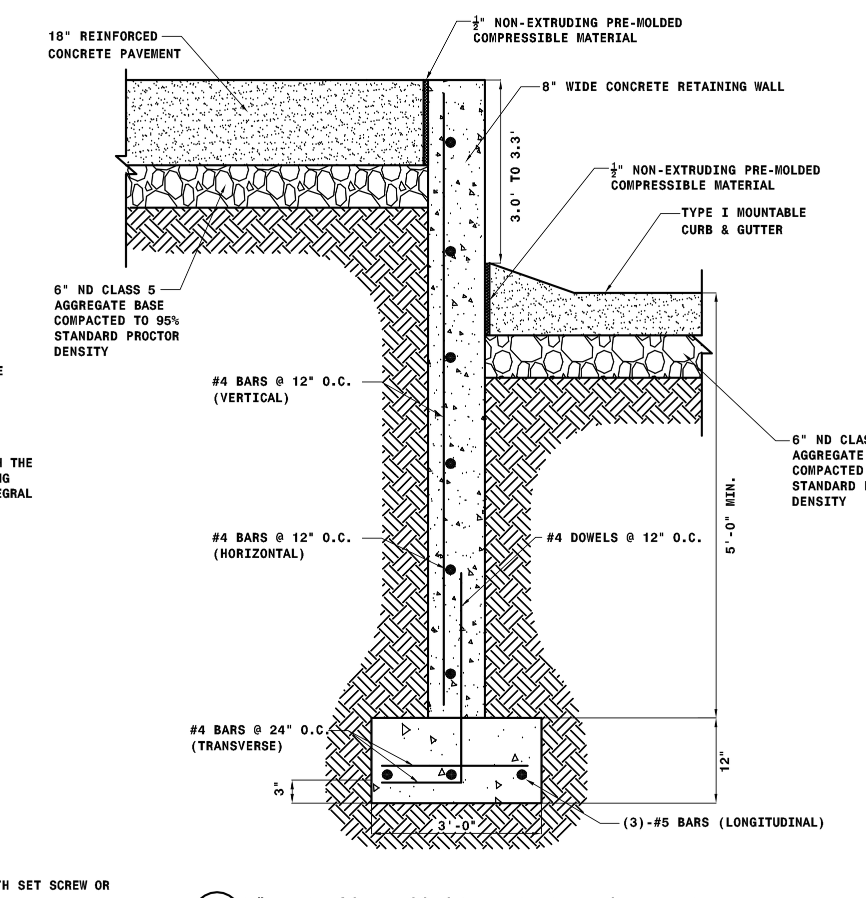

6 / C1 8" WIDE SOUTH CONCRETE RETAINING WALL DETAIL
NOT-TO-SCALE

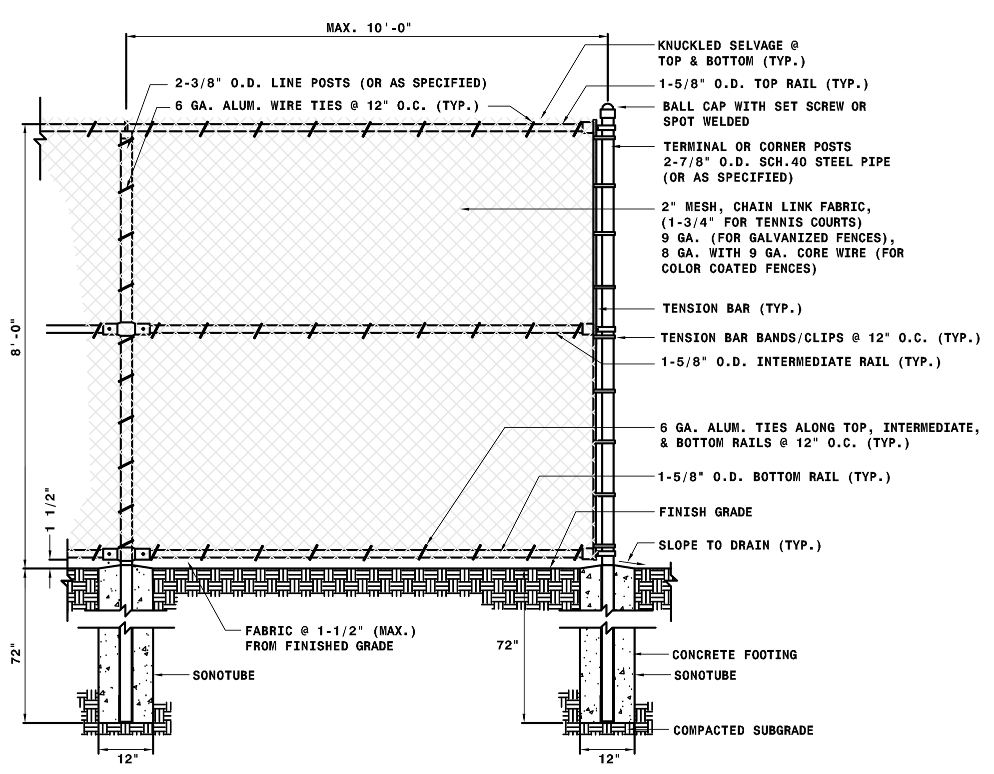

4 / C1 8' HIGH CHAIN LINK FENCE
NOT-TO-SCALE

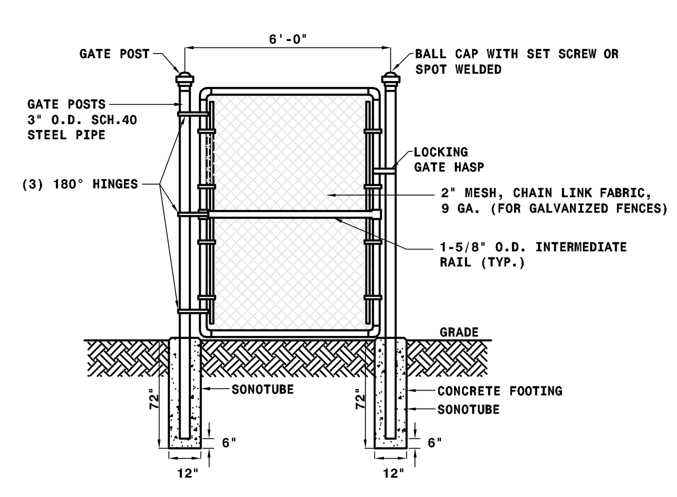

5 / C1 6' WIDE/8' HIGH CHAIN LINK SWING GATE
NOT-TO-SCALE

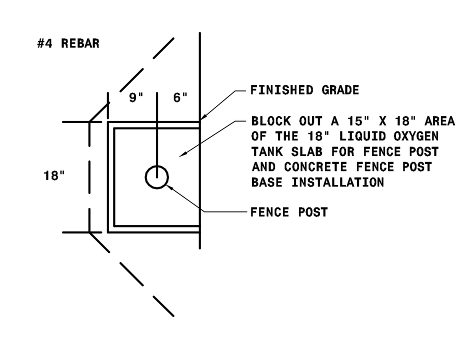

7 / C1 FENCE POST HOLDOUT DETAIL (EDGE OF SLAB)
NOT-TO-SCALE

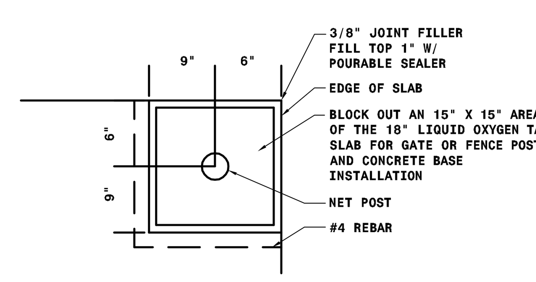

8 / C1 FENCE POST HOLDOUT DETAIL (CORNER OF SLAB)
NOT-TO-SCALE

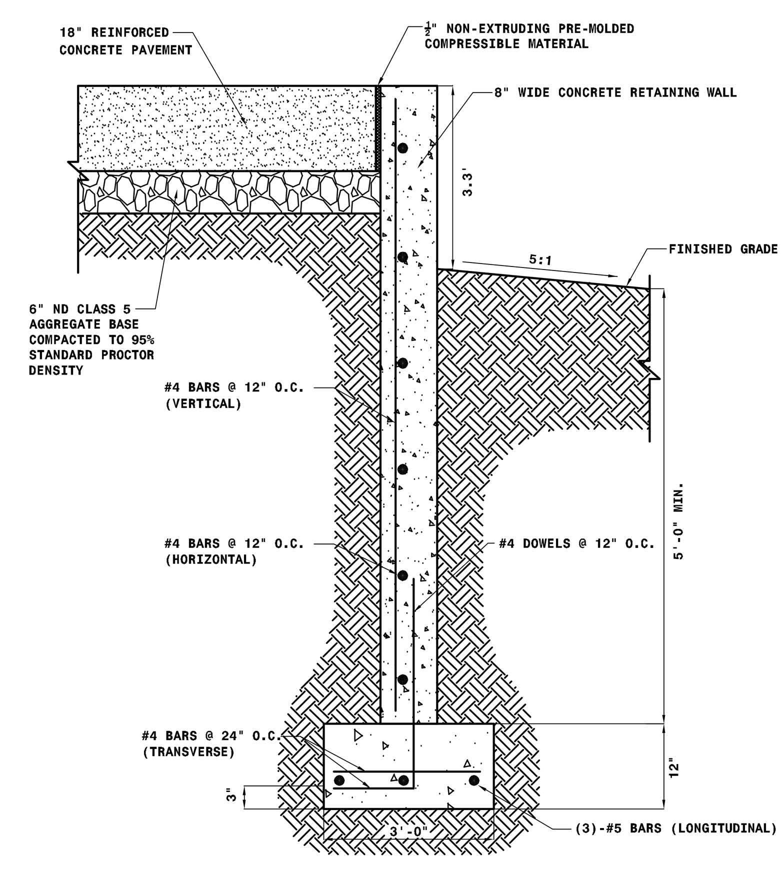

9 / C1 8" WIDE EAST CONCRETE RETAINING WALL DETAIL
NOT-TO-SCALE

CIVIL DETAILS

NOT TO SCALE

CIVIL SYMBOL LEGEND:

EXISTING SPOT ELEVATION	REMOVE EXISTING CONCRETE PAVEMENT
EXISTING STORM MANHOLE	REMOVE EXISTING CONCRETE PAVEMENT (ALTERNATE BID NO. 1)
EXISTING STORM INLET	REMOVE EXISTING BRICK WALL
EXISTING SANITARY MANHOLE	REMOVE EXISTING CONCRETE CURB
EXISTING ELECTRIC MANHOLE	REMOVE EXISTING CHAIN LINK FENCE
EXISTING GATE VALVE	892.95TP NEW TOP OF PAVEMENT ELEVATION
EXISTING LIGHT POLE	889.50TC NEW TOP OF CURB ELEVATION
EXISTING TRANSFORMER	892.80SW NEW SIDEWALK ELEVATION
EXISTING TREE	892.80TW NEW TOP OF WALL ELEVATION
UGP EXISTING UNDERGROUND POWER LINE	M.E. MATCH EXISTING ELEVATION
S EXISTING SANITARY SEWER LINE	NEW 4" REINFORCED CONCRETE SIDEWALK
STORM EXISTING STORM SEWER LINE	NEW 4" REINFORCED CONCRETE SIDEWALK (ALTERNATE BID NO. 1)
W EXISTING WATERMAIN LINE	NEW 18" REINFORCED CONCRETE PAVEMENT
CW EXISTING CHILLED WATER LINE	NEW TYPE 1 MOUNTABLE CONCRETE CURB & GUTTER
	NEW 8' HIGH CHAIN LINK FENCE

PLAN NOTES:

1. CONTRACTOR SHALL PROTECT ALL PROPERTY PINS. PROPERTY PINS DESTROYED OR DISTURBED SHALL BE REPLACED AT CONTRACTORS EXPENSE.
2. CONTRACTOR SHALL LOCATE ALL UTILITIES PRIOR TO CONSTRUCTION. NORTH DAKOTA ONE CALL WILL ONLY LOCATE THEIR MAINS AND WILL NOT LOCATE PRIVATE UTILITIES ON THIS SITE. THE VA IS NOT RESPONSIBLE FOR LOCATING ANY ON SITE UTILITIES.
3. ALL PAVEMENT MARKED FOR DEMOLITION SHALL BE FULL DEPTH SAW CUT.
4. ALL GRASSED AREAS DISTURBED BY CONSTRUCTION SHALL HAVE TOPSOIL (6" DEPTH), GRADED, SEEDED, AND HYDRO-MULCHED.
5. CONTRACTOR SHALL PROTECT THE EXISTING LIQUID OXYGEN TANK AND CONTROLS UNTIL THE NEW PAD, EQUIPMENT, AND CONTROLS ARE INSTALLED AND OPERATIONAL.
6. CONTRACTOR IS RESPONSIBLE FOR GENERAL TRAFFIC CONTROL TO ALLOW FOR PUBLIC ACCESS THROUGH THE PROJECT SITE. CONTRACTOR SHALL PROVIDE ADEQUATE SIGNAGE FOR PUBLIC SAFETY AND TRAFFIC CONTROL. CONTRACTOR IS RESPONSIBLE FOR KEEPING THE EAST LOADING DOCK OPEN FOR DAILY DELIVERIES.

BENCHMARKS:

1. BM#1: THE SOUTHEAST FLANGE BOLT OF THE FIRE HYDRANT LOCATED IN THE NORTHWEST QUADRANT OF 21ST AVENUE NORTH AND ELM STREET. ELEV: 902.46 (NAVD 88)
2. BM#2: THE SOUTHEAST FLANGE BOLT OF THE FIRE HYDRANT LOCATED EAST OF ELM STREET AND 21ST AVENUE NORTH ENTRANCE. ELEV: 902.74 (NAVD 88)

Revisions	Date

Dept. of Veterans Affairs
Medical Center
2101 Elm Street North
Fargo, ND 58102

IMAGE GROUP INC.
403 CENTER AVENUE, SUITE 300
MOORHEAD, MN 56560

ONE BUILDING SYSTEMS CONSULTANTS
Fargo, ND • Grand Forks, ND • Minneapolis, MN
701.280.0500 • 701.775.2594 • 651.361.8728

MBN ENGINEERING
MECHANICAL • ELECTRICAL • CIVIL
503 7th St N, SUITE 200
FARGO, ND 58102
PHONE: 701.478.6336
FAX: 701.478.6340

IMAGE GROUP INC., Architecture & Interiors
OBERMILLER NELSON ENGINEERING, Mechanical Engineers
MBN ENGINEERS, Civil & Electrical Engineers

REGISTERED PROFESSIONAL ENGINEER, ANTHONY ... EBEL, PE-6864, NORTH DAKOTA, DATE 8-5-11

Drawing Title	Project Title	Date
CIVIL DEMOLITION GRADING / PAVING / DETAILS	VA MEDICAL CENTER LIQUID OXYGEN TANK SITE PREP	AUGUST 5, 2011
VA Project No. 437-11-155	Designed By TE / Checked By JM / Drawn By TE	SCALE 1" = 20'-0"
Contract No. VA263-P-1217 VA263-C-		Drawing No. C1
Building No. SITE	Location VA MEDICAL CENTER FARGO, ND	Dwg. 2 of 4
AutoCAD File Name 11-102 C1.DWG		

Department of Veterans Affairs