ABB

MADE IN USA AT
JEFFERSON CITY, MO

CLASS ONAN 60 HERTZ 1LUJ
THREE PHASE DISTRIBUTION TRANSFORMER

KVA	AT CONTINUOUS RISE °C	STYLE	SERIAL	MFG DATE
2000.0	65	F77H217FCY	99J999999	MMM-YY

HIGH VOLTAGE	HV BIL KV	HV MTL	% IMPEDANCE
13200Y	95	AL	8.67

LOW VOLTAGE	LV BIL KV	LV MTL	GALLONS OIL
480/240V TAP	30	AL	660

INSULATING LIQUID: CONTAINS MINERAL OIL WITH NO DETECTABLE LEVEL OF PCB, LESS THAN 1PPM, AT THE TIME OF MANUFACTURE

CAUTION: 1. BEFORE OPERATING READ INSTRUCTION BOOK 46-060-1 AT WWW.ABBDTD.COM.
2. TANK MUST BE SOLIDLY GROUNDED.

APPROXIMATE WEIGHTS IN POUNDS	
CORE & COILS	4019
OIL	4950
CASE	3998
TOTAL	12967

TAP CHANGER RATINGS		
TAP	VOLTAGE	CURRENT
1	13860	83.31
2	13530	85.35
3	13200	87.48
4	12870	89.72
5	12540	92.08

ID .

STEP UP APPLICATION

c UL us LISTED
LIQUID-IMMERSED DISTRIBUTION TRANSFORMER 16ER

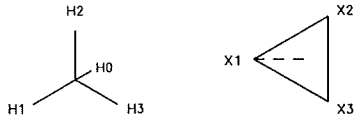

PHASOR DIAGRAM

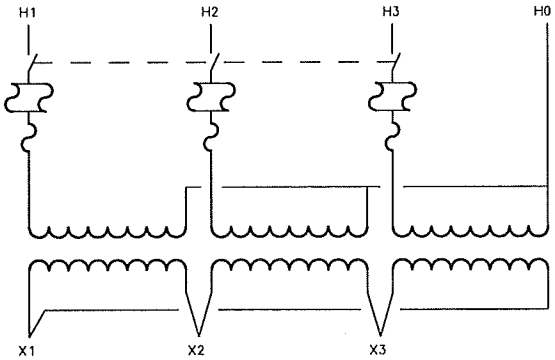

T1, T2, T3

ABB

MADE IN USA AT
JEFFERSON CITY, MO

CLASS ONAN 60 HERTZ 1LUJ
THREE PHASE DISTRIBUTION TRANSFORMER

KVA	AT CONTINUOUS RISE °C	STYLE	SERIAL	MFG DATE
2000.0	65	F3EE217JTP	99J999999	MMM-YY

HIGH VOLTAGE	HV BIL KV	HV MTL	% IMPEDANCE
13200	95	AL	7.13

LOW VOLTAGE	LV BIL KV	LV MTL	GALLONS OIL
480Y/277	30	AL	571

INSULATING LIQUID: CONTAINS MINERAL OIL WITH NO DETECTABLE LEVEL OF PCB, LESS THAN 1PPM, AT THE TIME OF MANUFACTURE

CAUTION: 1. BEFORE OPERATING READ INSTRUCTION BOOK 46-060-1 AT WWW.ABBDTD.COM.
2. TANK MUST BE SOLIDLY GROUNDED.

APPROXIMATE WEIGHTS IN POUNDS	
CORE & COILS	4560
OIL	4283
CASE	3364
TOTAL	12207

TAP CHANGER RATINGS

TAP	VOLTAGE	CURRENT
1	13860	83.31
2	13530	85.35
3	13200	87.48
4	12870	89.72
5	12540	92.08

ID .

c UL us LISTED
LIQUID-IMMERSED DISTRIBUTION TRANSFORMER
18ER

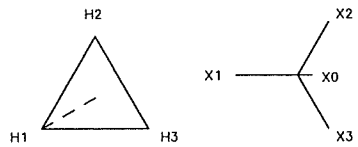

PHASOR DIAGRAM

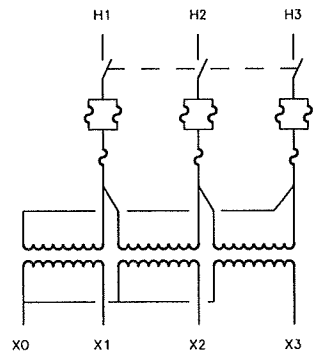

14

ABB DISTRIBUTION TRANSFORMER
MADE IN U.S.A. AT
JEFFERSON CITY, MO.

1LUJ

CLASS ONAN 60 HERTZ
THREE PHASE

TANK MUST BE SOLIDLY GROUNDED

KVA 150.0	CONT RISE 65°C	SER 99J999999	STYLE V3EA497JTQ
HV 13200			
LV 208Y/120	HV AL / LV AL	HV BIL 95 / LV BIL 30	MFG DATE MMM-YY / % IMPEDANCE 4.96 / GAL OIL 190 / WT LBS 3506

TAP CHANGER

TAP	VOLTAGE
1	13860
2	13530
3	13200
4	12870
5	12540

ID .

c UL us LISTED
LIQUID-IMMERSED DISTRIBUTION TRANSFORMER
16ER

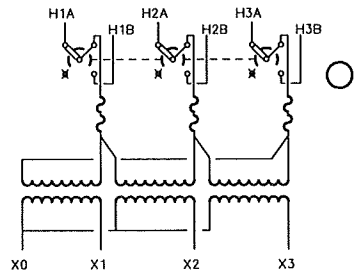

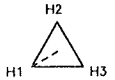

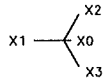

PHASOR DIAGRAM

CAUTION:
BEFORE OPERATING
READ INSTRUCTION
BOOK 46-060-1
AT WWW.ABBDTD.COM

CONTAINS MINERAL OIL WITH NO DETECTABLE LEVEL OF PCB, LESS THAN 1PPM, AT THE TIME OF MANUFACTURE

15.17