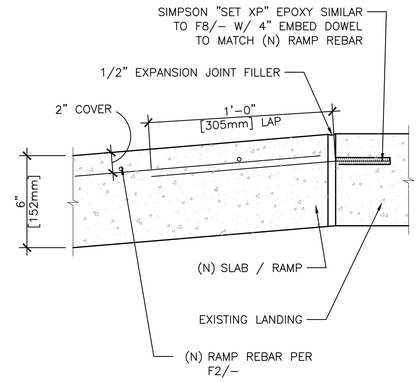

B6 (N) SLAB/RAMP TO (E) LANDING DETAIL
SCALE: 3" = 1'–0"

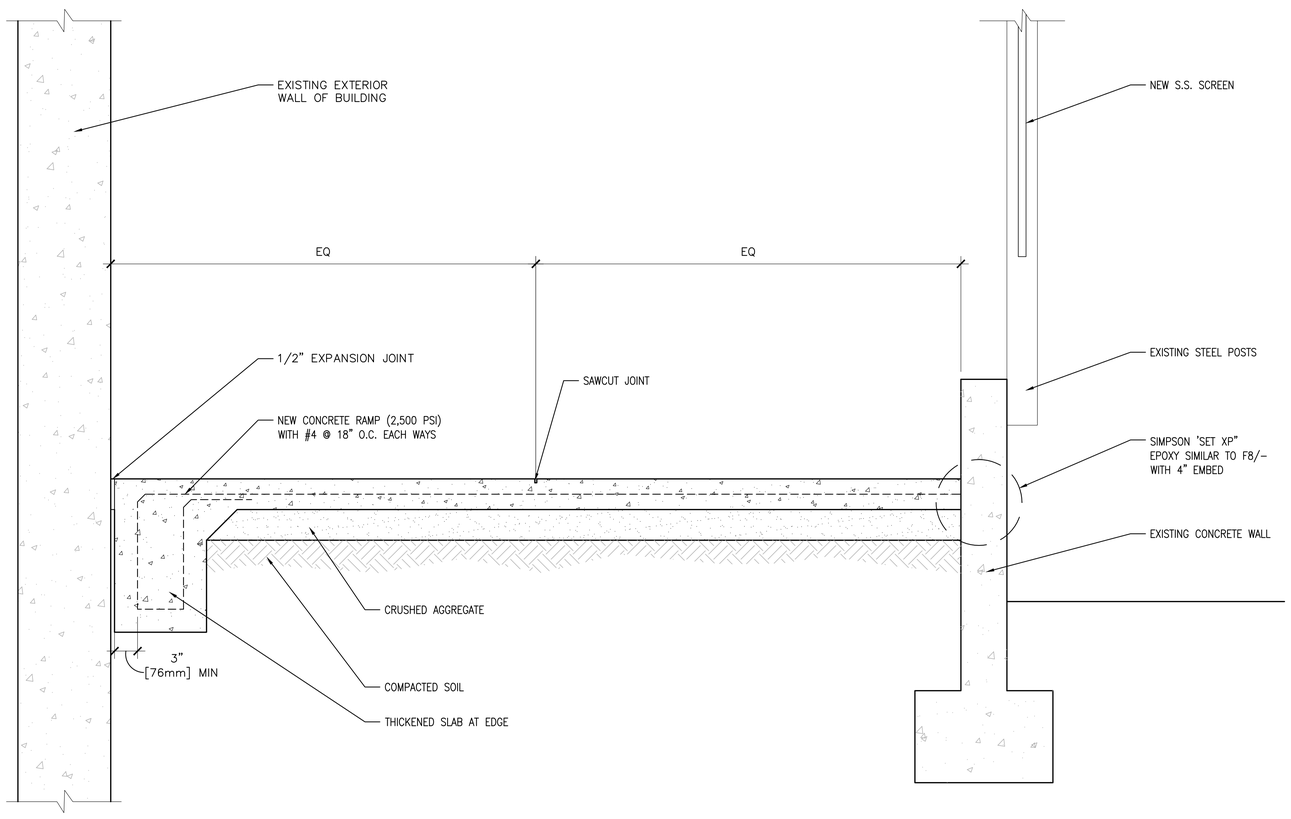

F2 RAMP SECTION
SCALE: 1–1/2" = 1'–0"

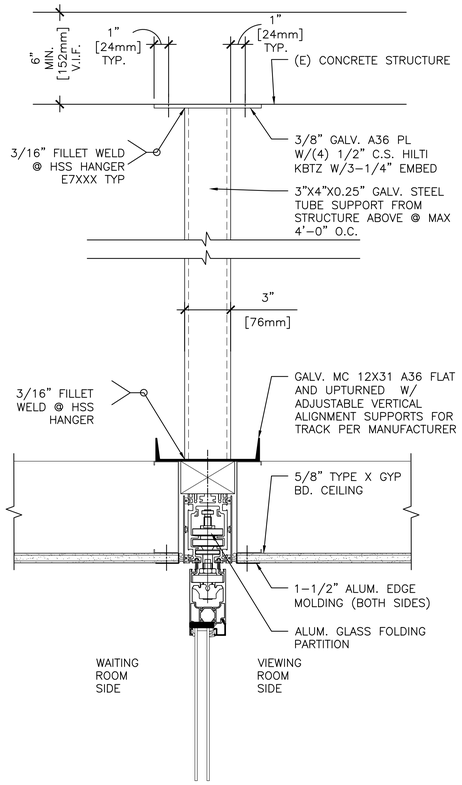

D8 ALUM. GLASS FOLDING PARTITION HEAD
SCALE: 3" = 1'–0"

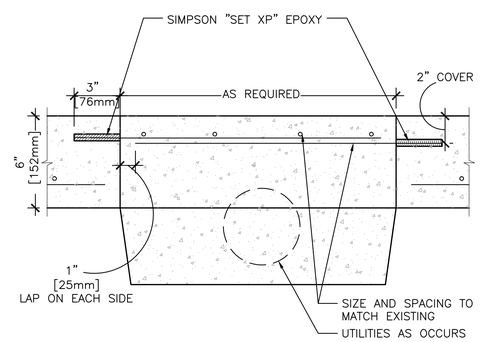

F8 SAW CUT SLAB DETAIL
SCALE: 3" = 1'–0"

FULLY SPRINKLERED
FINAL CONSTRUCTION DOCUMENTS

Revisions:	Date
35% SCHEMATIC SUBMISSION	09/12/15
95% CONSTRUCTION DOCUMENTS	03/14/16
100% CONSTRUCTION DOCUMENTS	04/01/16
FINAL CONSTRUCTION DOCUMENTS	04/29/16

CONSULTANTS:

MARTIN & associates
JOHN A. MARTIN & ASSOCIATES
Structural Engineers
950 S. Grand Avenue
Los Angeles, Calif. 90015
Phone (213) 483-6490
Fax (213) 483-3084

REGISTERED PROFESSIONAL ENGINEER GREGORY LOUIS OROSCO No. 4957 STRUCTURAL STATE OF CALIFORNIA
DATE SIGNED 8/26/16

ARCHITECT/ENGINEERS:

SRD ARCHITECTS INC
ARCHITECTURE INTERIORS PROJECT MANAGEMENT
3920 E. CORONADO STREET, SUITE 201
ANAHEIM CALIFORNIA 92807
1000 S FREMONT AVE, UNIT 53,
BLDG. A1, SUITE 1218
ALHAMBRA CALIFORNIA 91803
www.SRDarchitectsInc.com
O: 714 688 0212 • 626 202 0546 • FAX: 714 688 0244

Drawing Title: FLOOR PLAN - 5TH FLOOR WEST

Approved:
CHIEF CONSTRUCTION MANAGEMENT/DESIGN SECTION
PROJECT ENGINEER

Project Title: MORGUE RENOVATION FOR FAMILY ACCESS

Location: 5901 EAST SEVENTH STREET LONG BEACH, CA 90822

Date	Checked	Drawn
04/29/16	M.B.	M.K.

Project Number: 600-15-102
Building Number: 2
Drawing Number: S-101
Dwg. 48 of 81

Office of Construction and Facilities Management
Department of Veterans Affairs

FINAL CONSTRUCTION DOCUMENTS

8/22/2016 5:31:15 PM, ARCH expand E1 (30.00 x 42.00 Inches)

VA FORM 08-6231