'WIILLIAM S. MIDDLETON MEMORIAL VETERAN'S HOSPITAL'

CONSTRUCTION DOCUMENTS

2500 OVERLOOK TERRACE
MIDDLETON, WISCONSIN

UPGRADE BUILDING 12 HEATING & VENTILATION PROJECT
PROJECT NO.: 607-11-101

CAMPUS MAP

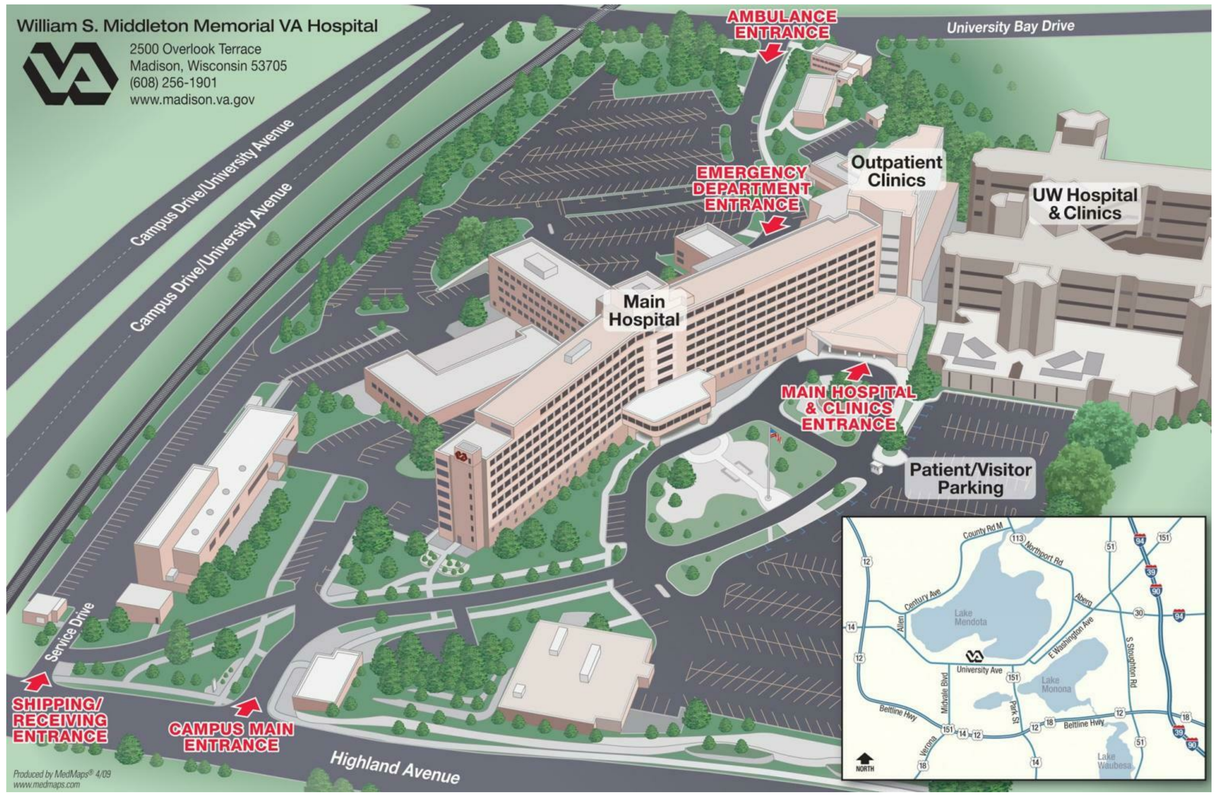

PROJECT TEAM

PROJECT LEADER/ARCHITECT

CHEQUAMEGON BAY ENGINEERING, INC.

ASHLAND, WI
211 6TH STREET WEST
ASHLAND, WI. 54806
PHONE: (715) 682-6004
FAX: (715) 682-6025

MILWAUKEE, WI
1109 N. MAYFAIR RD., SUITE 208
MILWAUKEE, WI. 53226
PHONE: (414) 258-6004
FAX: (414) 258-6154

CIVIL

CHEQUAMEGON BAY ENGINEERING, INC.

ASHLAND, WI
211 6TH STREET WEST
ASHLAND, WI. 54806
PHONE: (715) 682-6004
FAX: (715) 682-6025

STRUCTURAL ENGINEER

CHEQUAMEGON BAY ENGINEERING, INC.

ASHLAND, WI
211 6TH STREET WEST
ASHLAND, WI. 54806
PHONE: (715) 682-6004
FAX: (715) 682-6025

MILWAUKEE, WI
1109 N. MAYFAIR RD., SUITE 208
MILWAUKEE, WI. 53226
PHONE: (414) 258-6004
FAX: (414) 258-6154

FIRE PROTECTION

HENNEMAN ENGINEERING INC.

1232 FOURIER DRIVE, SUITE 101
MADISON, WI. 53717-1960
PHONE: (608) 833-7000
FAX: (608) 833-6996

PLUMBING

HENNEMAN ENGINEERING INC.

1232 FOURIER DRIVE, SUITE 101
MADISON, WI. 53717-1960
PHONE: (608) 833-7000
FAX: (608) 833-6996

HVAC

HENNEMAN ENGINEERING INC.

1232 FOURIER DRIVE, SUITE 101
MADISON, WI. 53717-1960
PHONE: (608) 833-7000
FAX: (608) 833-6996

ELECTRICAL

HENNEMAN ENGINEERING INC.

1232 FOURIER DRIVE, SUITE 101
MADISON, WI. 53717-1960
PHONE: (608) 833-7000
FAX: (608) 833-6996

LOCATION MAP

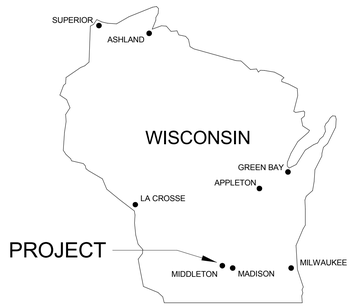

SHEET INDEX

Sheet Number	Sheet Name	Issued For 65% Design Development Review	Issued For 95% Design Development Review	Issued For 100% Construction Documents
General Information/Title Sheets				
G100	TITLE SHEET	X	X	X
Architectural Drawings				
A101	FIRST FLOOR PLAN	X	X	X
A102	PENTHOUSE FLOOR PLAN - NEW WORK	X	X	X
A103	ROOF PLANS	X	X	X
A200	EXTERIOR ELEVATIONS	X	X	X
A201	EXTERIOR ELEVATIONS	X	X	X
A300	BUILDING SECTIONS	X	X	X
A301	WALL SECTIONS	X	X	X
A400	DETAILS		X	X
Structural Drawings				
S001	STRUCTURAL GENERAL NOTES AND LEGENDS		X	X
S102	STRUCTURAL PENTHOUSE PLAN - NEW WORK	X	X	X
S103	STRUCTURAL ROOF PLAN - NEW WORK	X	X	X
S300	STRUCTURAL DETAILS	X	X	X
S301	STRUCTURAL DETAILS	X	X	X
S302	STRUCTURAL DETAILS		X	X
S303	STRUCTURAL DETAILS		X	X
HVAC Drawings				
M001	MECHANICAL NOTES, SYMBOLS AND ABBREVIATIONS	X	X	X
MD101	MECHANICAL FLOOR PLAN - DEMOLITION	X	X	X
M101	MECHANICAL FLOOR PLAN - NEW WORK	X	X	X
MD102	MECHANICAL ROOF PLAN - DEMOLITION	X	X	X
M102	MECHANICAL ROOF PLAN - NEW WORK	X	X	X
M200	HVAC SECTIONS		X	X
M300	HVAC DETAILS	X	X	X
M301	HVAC DETAILS	X	X	X
M302	HVAC DETAILS		X	X
M400	HVAC CONTROLS	X	X	X
M500	HVAC SCHEDULES	X	X	X
Electrical Drawings				
E001	ELECTRICAL NOTES, SYMBOLS AND ABBREVIATIONS	X	X	X
ED101	ELECTRICAL FLOOR PLAN - DEMOLITION	X	X	X
E101	ELECTRICAL FLOOR PLAN - NEW WORK	X	X	X
ED102	ELECTRICAL ROOF PLAN - DEMOLITION	X	X	X
E102	ELECTRICAL ROOF PLAN - NEW WORK	X	X	X
E102.1	ELECTRICAL ROOF PLAN - NEW WORK	X	X	X
E300	ELECTRICAL ONE-LINE DIAGRAMS AND SCHEDULES	X	X	X

FINAL CONSTRUCTION DOCUMENTS

Revisions:	Date

Dept. of Veterans Affairs
Medical Center
2500 Overlook Terrace
Middleton, WI 53750

ARCHITECT/ENGINEERS:

Henneman Engineering Inc.
Madison:
1232 Fourier Drive, Suite 101 **T** 608.833.7000
Madison, Wisconsin 53717-1960 **F** 608.833.6996
Email: info@henneman.com
Website: http://www.henneman.com
JOB NO. 11-7256
© 2005 Henneman Engineering Inc. / IL reg. #184-000245 (001-013372) (062-036272)

PROJECT LEADER:

CHEQUAMEGON BAY ENGINEERING, INC.
© CBE 2002-2011

ASHLAND, WI
211 6TH STREET WEST
ASHLAND, WI. 54806
PHONE: (715) 682-6004
FAX: (715) 682-6025

MILWAUKEE, WI
1109 N. MAYFAIR RD. SUITE 208
MILWAUKEE, WI. 53226
PHONE: (414) 258-6004
FAX: (414) 258-6154

MINOCQUA, WI
7009 HWY D/ 350JTH
MINOCQUA, WI. 54548
PHONE: (715) 356-9300
FAX: (715) 358-6719

Drawing Title	Project Title	Project Number	Office of Construction and Facilities Management
TITLE SHEET	UPGRADE BUILDING 12 HEATING & VENTILATION PROJECT	607-11-101	
Approved: Project Director	Location: Madison, Wisconsin 53705	Building Number: 12	
	Date: February 24, 2012 / Checked: / Drawn: KJK	Drawing Number: G100	Department of Veterans Affairs

VA FORM 08-6231

PLAN NOTES

1. CONTRACTOR TO COMPLETELY REMOVE (9) EXISTING DOUBLE HUNG WINDOWS AND ACCOMPANYING STORM WINDOWS, FIVE (5) ON THE NORTH ELEVATION AND FOUR (4) ON THE WEST ELEVATION. PREP OPENINGS FOR, SUPPLY, AND INSTALL NEW WINDOWS, FRAMES, INTERIOR SECURITY SCREENS AND INTERIOR SUN SCREENS AND SHADES. SEE PROJECT SPECIFICATIONS FOR WINDOWS, GLAZING, SECURITY SCREENS AND SHADE REQUIREMENTS.

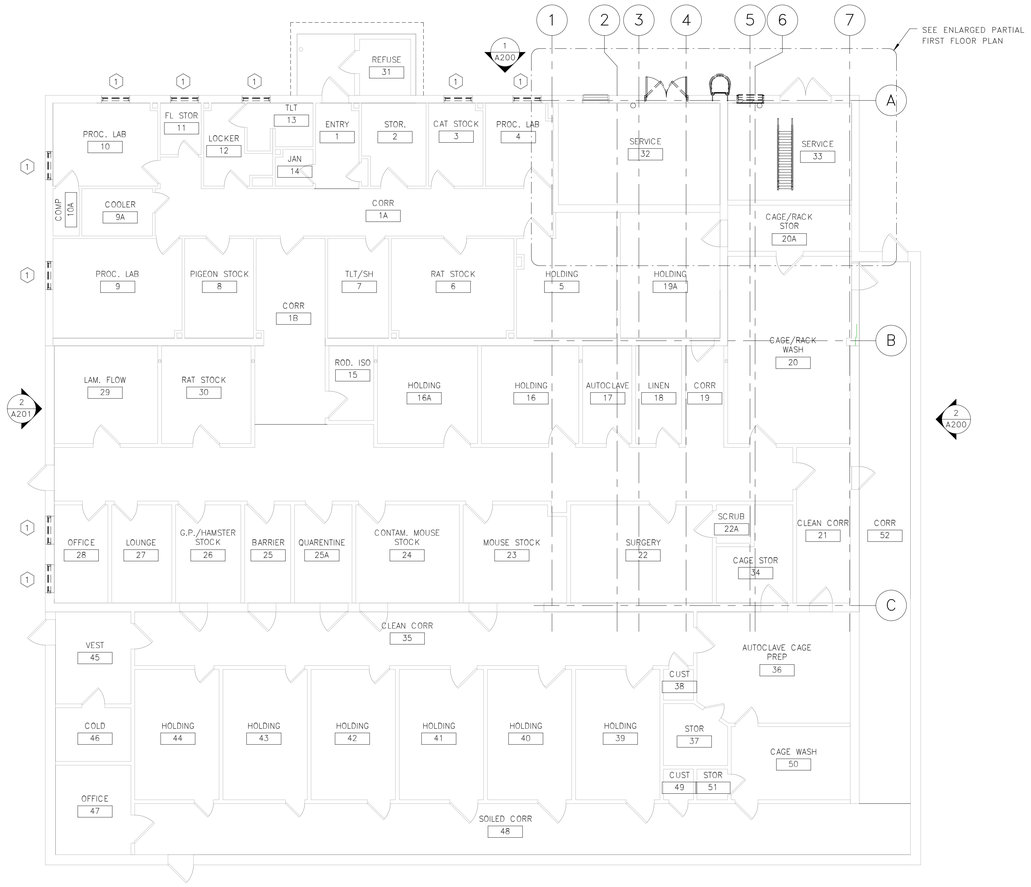

North

OVERALL FIRST FLOOR PLAN

Scale1/8" = 1'-0"

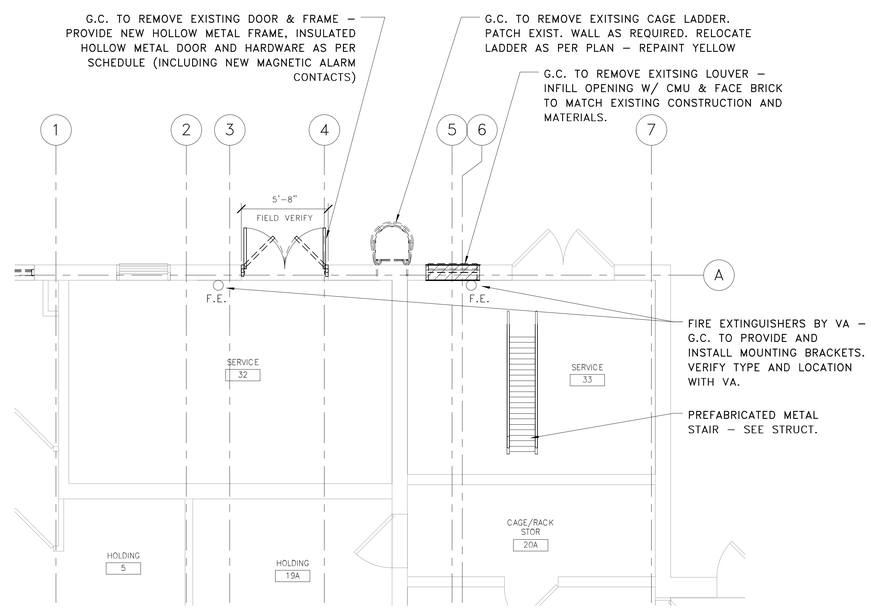

North

Enlarged Partial First Floor Plan

Scale1/4" = 1'-0"

FINAL CONSTRUCTION DOCUMENTS

Revisions:	Date

Dept. of Veterans Affairs
Medical Center
2500 Overlook Terrace
Middleton, WI 53750

ARCHITECT/ENGINEERS:

Henneman Engineering Inc.
Madison:
1232 Fourier Drive, Suite 101 **T** 608.833.7000
Madison, Wisconsin 53717-1960 **F** 608.833.6996
Email: info@henneman.com
Website: http://www.henneman.com
JOB NO. 11–7256
© 2005 Henneman Engineering Inc. / IL reg. #184-000245 (001-013372) (062-036272)

PROJECT LEADER:

CHEQUAMEGON BAY ENGINEERING, INC.
© CBE 2002-2011

ASHLAND, WI
211 6TH STREET WEST
ASHLAND, WI. 54806
PHONE: (715) 682-6004
FAX: (715) 682-6025
MILWAUKEE, WI
1109 N. MAYFAIR RD.
SUITE 208
MILWAUKEE, WI. 53226
PHONE: (414) 258-6004
FAX: (414) 258-6154
MINOCQUA, WI
7609 HWY 51 SOUTH
MINOCQUA, WI. 54548
PHONE: (715) 356-9300
FAX: (715) 356-6719

Drawing Title: FIRST FLOOR PLAN	Project Title: UPGRADE BUILDING 12 HEATING & VENTILATION PROJECT		Project Number: 607-11-101
Approved: Project Director	Location: Madison, Wisconsin 53705		Building Number: 12
	Date: February 24, 2012	Checked:	Drawn: KJK
			Drawing Number: A101

Office of Construction and Facilities Management
Department of Veterans Affairs

VA FORM 08–6231

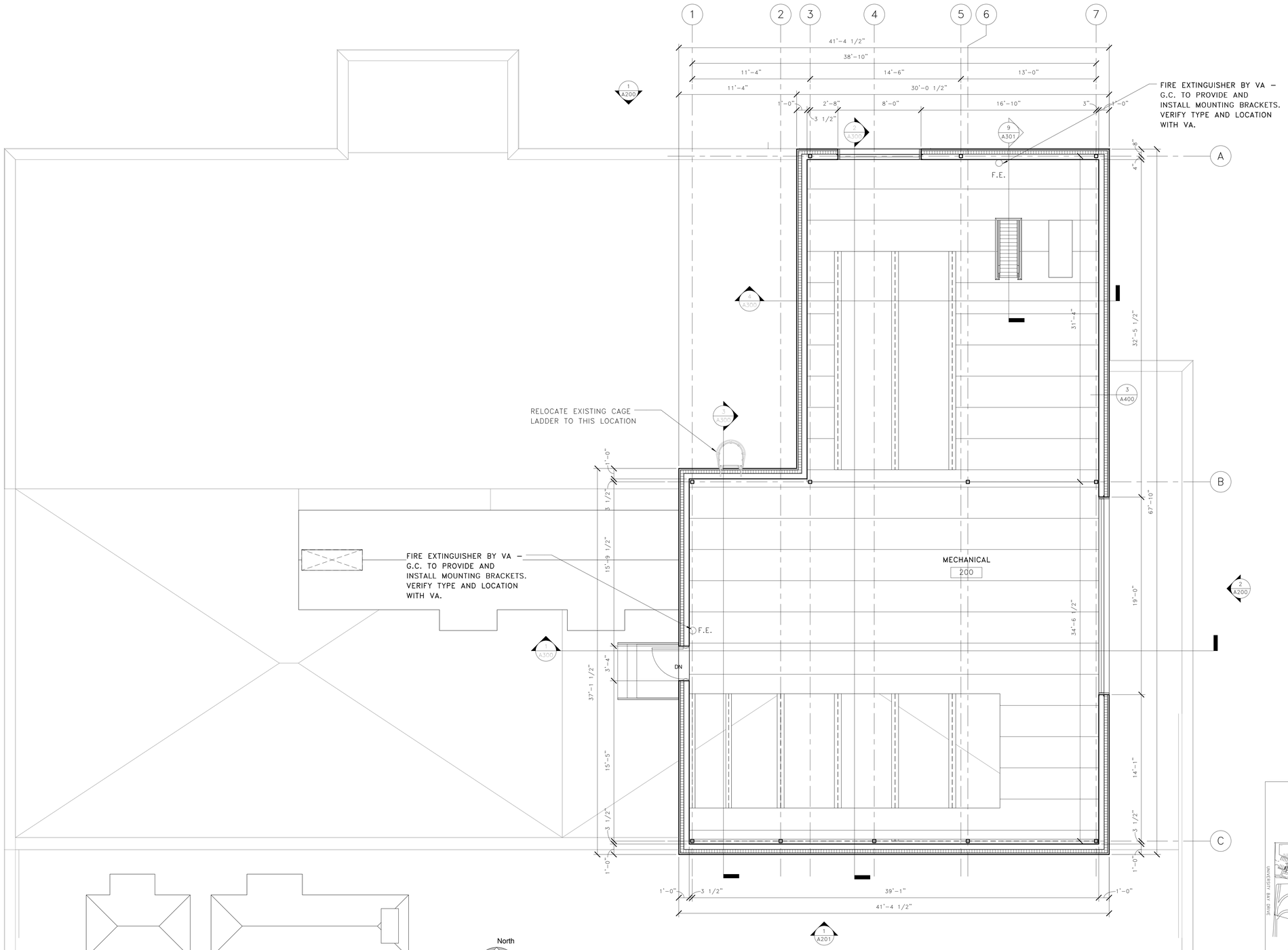

North

PENTHOUSE FLOOR PLAN - NEW WORK

Scale1/4" = 1'-0"

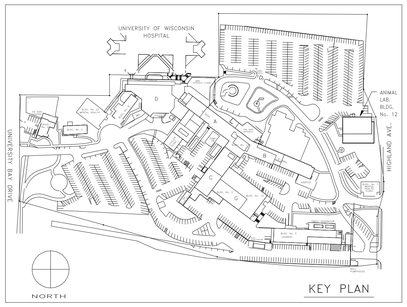

KEY PLAN

FINAL CONSTRUCTION DOCUMENTS

Revisions:	Date

Dept. of Veterans Affairs
Medical Center
2500 Overlook Terrace
Middleton, WI 53750

ARCHITECT/ENGINEERS:

Henneman Engineering Inc.
Madison:
1232 Fourier Drive, Suite 101 **T** 608.833.7000
Madison, Wisconsin 53717-1960 **F** 608.833.6996
Email: info@henneman.com
Website: http://www.henneman.com
JOB NO. 11-7256
© 2005 Henneman Engineering Inc. / IL reg. #184-000245 (001-013372) (062-036272)

PROJECT LEADER:

CHEQUAMEGON BAY ENGINEERING, INC.
© CBE 2002-2011

ASHLAND, WI
211 6TH STREET WEST
ASHLAND, WI. 54806
PHONE: (715) 682-6004
FAX: (715) 682-6025

MILWAUKEE, WI
1109 N. MAYFAIR RD.
SUITE 208
MILWAUKEE, WI. 53226
PHONE: (414) 258-6004
FAX: (414) 258-6154

MINOCQUA, WI
7609 HWY 51 SOUTH
MINOCQUA, WI. 54548
PHONE: (715) 358-9300
FAX: (715) 358-6719

Drawing Title	Project Title	Project Number	
PENTHOUSE FLOOR PLAN - NEW WORK	UPGRADE BUILDING 12 HEATING & VENTILATION PROJECT	607-11-101	Office of Construction and Facilities Management
Approved: Project Director	Location: Madison, Wisconsin 53705	Building Number: 12	
	Date: February 24, 2012 / Checked: / Drawn: KJK	Drawing Number: A102	Department of Veterans Affairs

VA FORM 08-6231

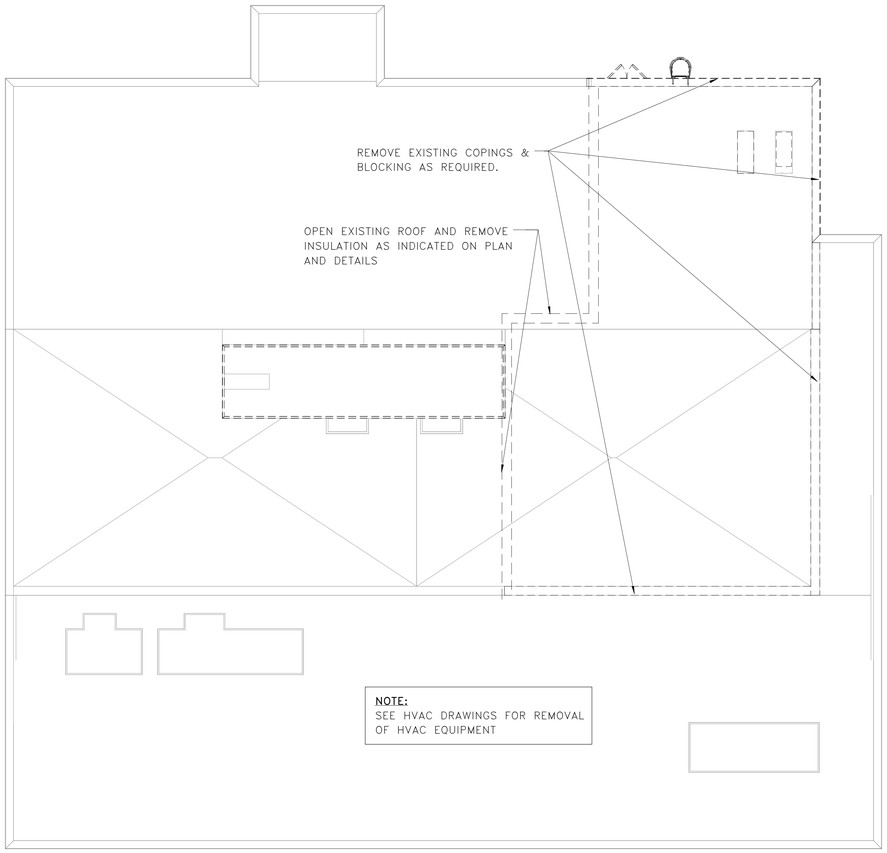

North

ROOF PLAN - DEMOLITION

Scale1/8" = 1'-0"

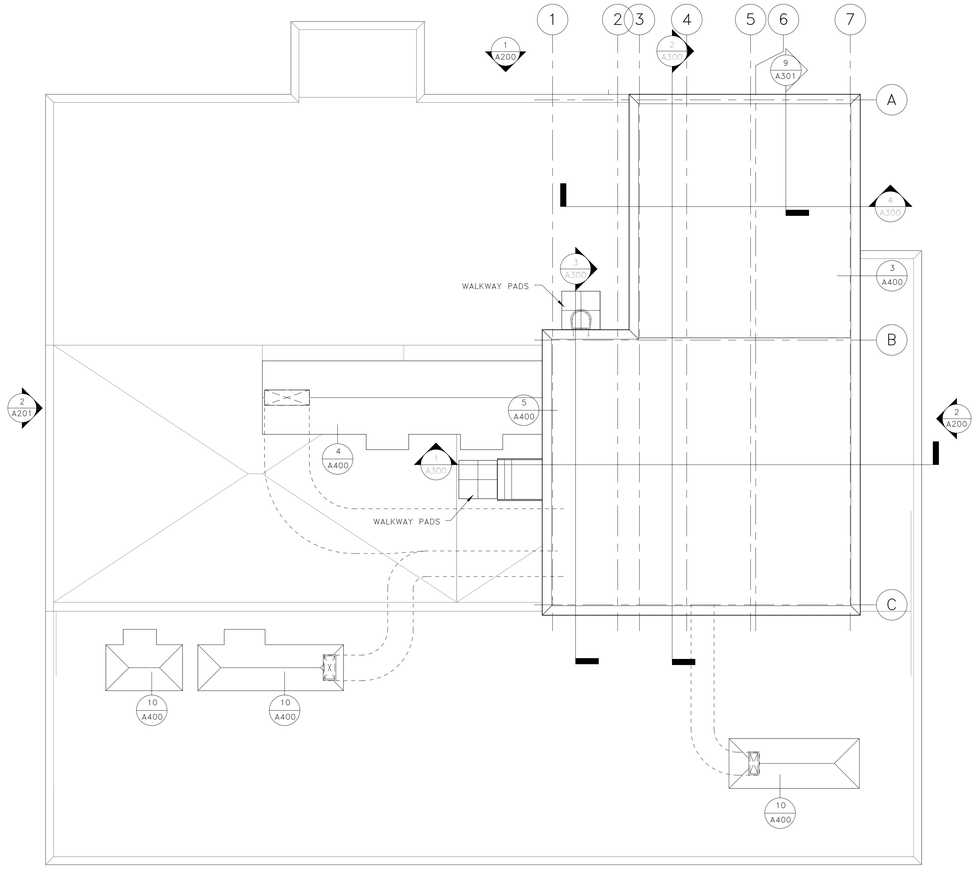

North

1 A201

ROOF PLAN - NEW WORK

Scale1/8" = 1'-0"

FINAL CONSTRUCTION DOCUMENTS

Revisions:	Date

Dept. of Veterans Affairs
Medical Center
2500 Overlook Terrace
Middleton, WI 53750

ARCHITECT/ENGINEERS:

Henneman Engineering Inc.
Madison:
1232 Fourier Drive, Suite 101 **T** 608.833.7000
Madison, Wisconsin 53717-1960 **F** 608.833.6996
Email: info@henneman.com
Website: http://www.henneman.com
JOB NO. 11-7256
© 2005 Henneman Engineering Inc. / IL reg. #184-000245 (001-013372) (062-036272)

PROJECT LEADER:

CHEQUAMEGON BAY ENGINEERING, INC.
© CBE 2002-2011

ASHLAND, WI
211 6TH STREET WEST
ASHLAND, WI. 54806
PHONE: (715) 682-6004
FAX: (715) 682-6025

MILWAUKEE, WI
1109 N. MAYFAIR RD.
SUITE 208
MILWAUKEE, WI. 53226
PHONE: (414) 258-6004
FAX: (414) 258-6154

MINOCQUA, WI
7609 HWY 51 SOUTH
MINOCQUA, WI. 54548
PHONE: (715) 356-9300
FAX: (715) 356-6719

Drawing Title	Project Title	Project Number	Office of Construction and Facilities Management
ROOF PLANS	UPGRADE BUILDING 12 HEATING & VENTILATION PROJECT	607-11-101	
Approved: Project Director	Location: Madison, Wisconsin 53705	Building Number: 12	
	Date: February 24, 2012 / Checked: / Drawn: KJK	Drawing Number: A103	Department of Veterans Affairs

VA FORM 08-6231

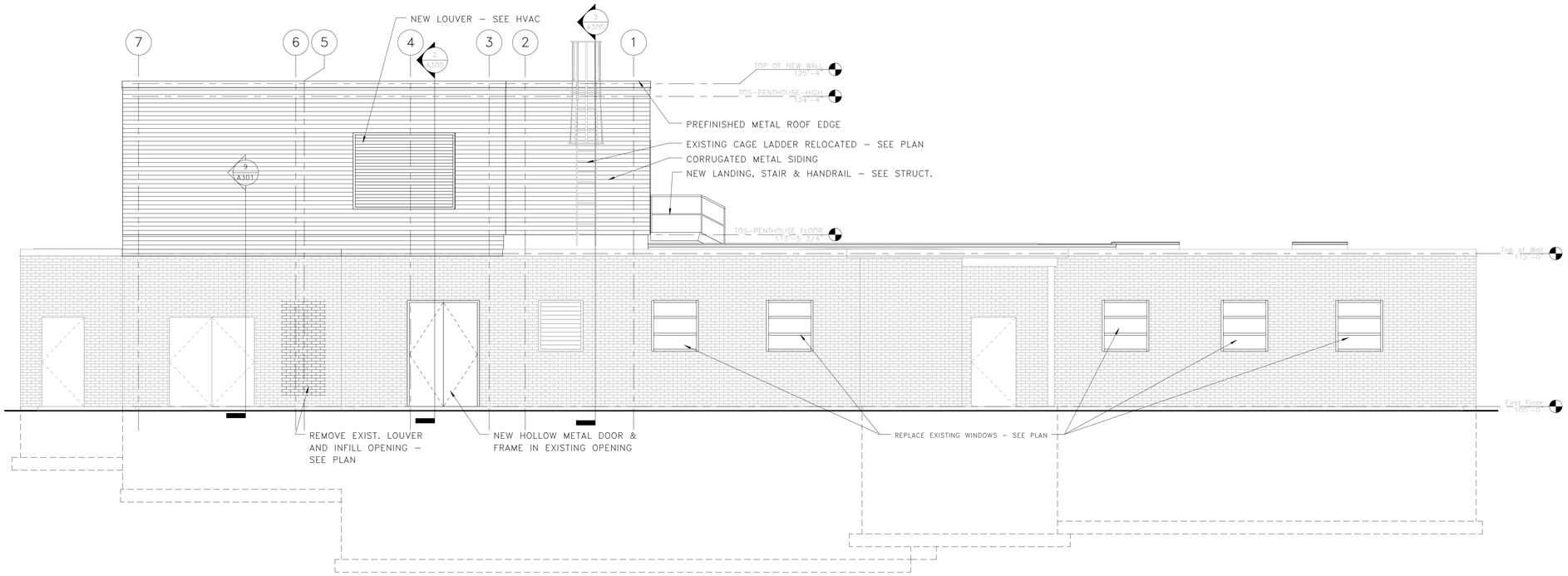

1 EXTERIOR ELEVATION - NORTH
1/4" = 1'-0"

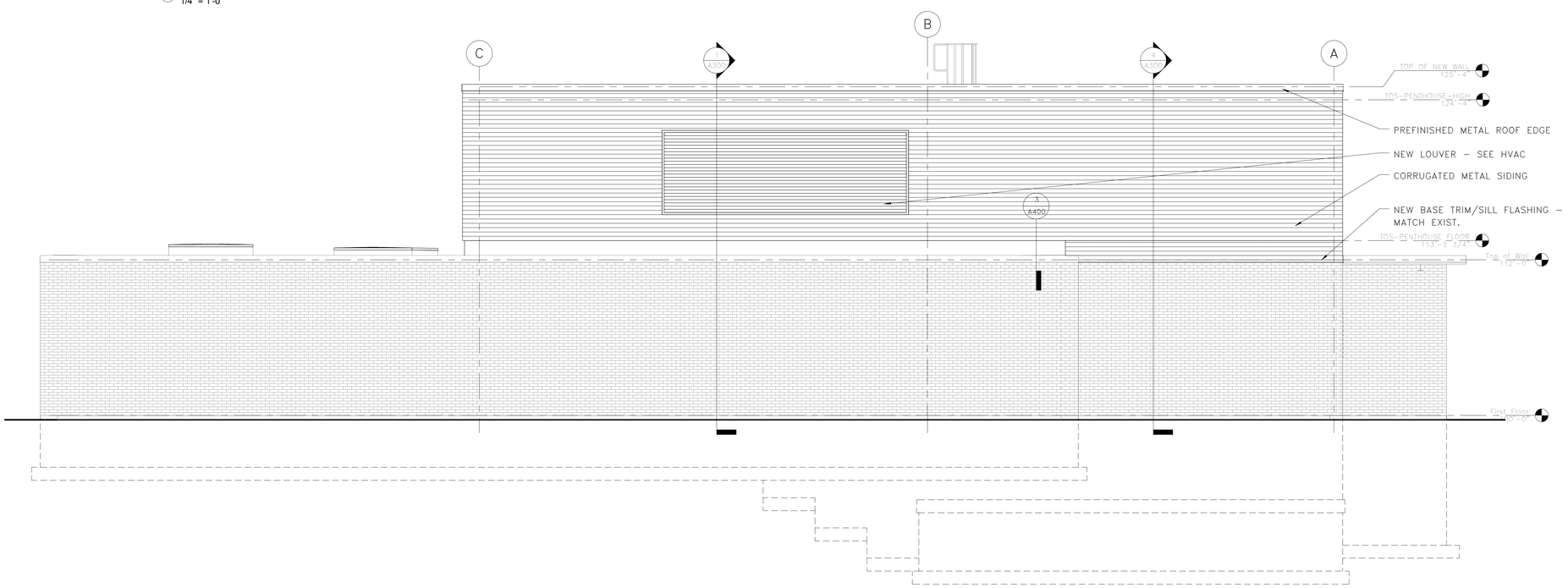

2 EXTERIOR ELEVATION - EAST
1/4" = 1'-0"

FINAL CONSTRUCTION DOCUMENTS

Revisions:	Date

Dept. of Veterans Affairs
Medical Center
2500 Overlook Terrace
Middleton, WI 53750

ARCHITECT/ENGINEERS:

Henneman Engineering Inc.
Madison:
1232 Fourier Drive, Suite 101 T 608.833.7000
Madison, Wisconsin 53717-1960 F 608.833.6996
Email: info@henneman.com
Website: http://www.henneman.com
JOB NO. 11–7256
© 2005 Henneman Engineering Inc. / IL reg. #184-000245 (001-013372) (062-036272)

PROJECT LEADER:

CHEQUAMEGON BAY ENGINEERING, INC.
© CBE 2002-2011

ASHLAND, WI
211 6TH STREET WEST
ASHLAND, WI. 54806
PHONE: (715) 682-6004
FAX: (715) 682-6020

MILWAUKEE, WI
1109 N. MAYFAIR RD.
SUITE 208
MILWAUKEE, WI. 53226
PHONE: (414) 258-6004
FAX: (414) 258-6154

MINOCQUA, WI
7609 HWY 51 SOUTH
MINOCQUA, WI. 54548
PHONE: (715) 356-9300
FAX: (715) 358-6719

Drawing Title	Project Title	Project Number	Office of Construction and Facilities Management
EXTERIOR ELEVATIONS	UPGRADE BUILDING 12 HEATING & VENTILATION PROJECT	607-11-101	
Approved: Project Director	Location: Madison, Wisconsin 53705	Building Number: 12	
	Date: February 24, 2012 / Checked: / Drawn: KJK	Drawing Number: A200	Department of Veterans Affairs

VA FORM 08–6231

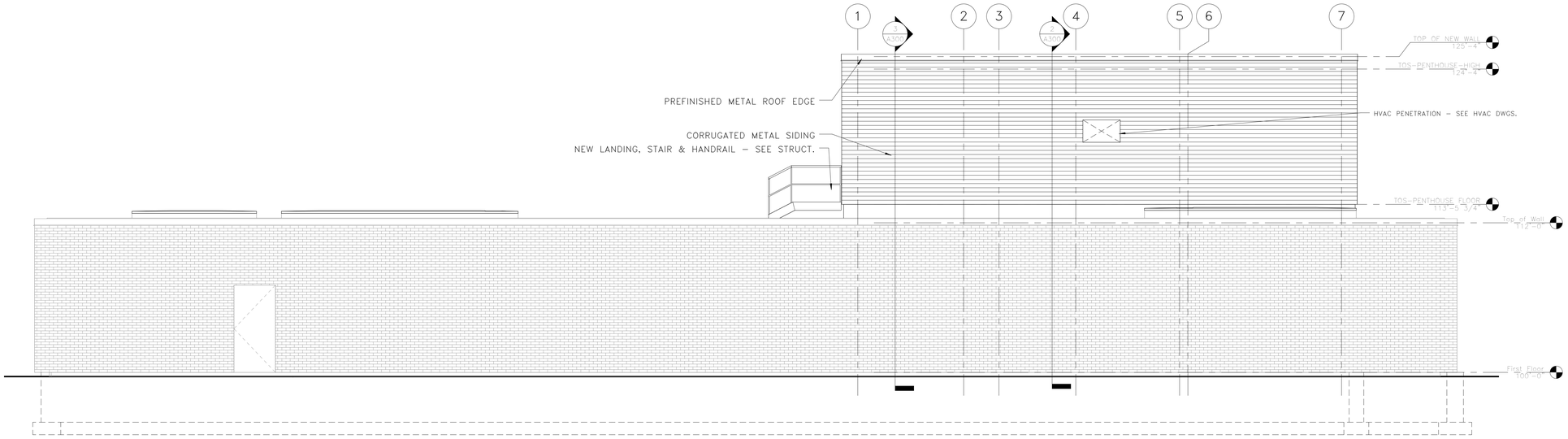

1 EXTERIOR ELEVATION - SOUTH
1/4" = 1'-0"

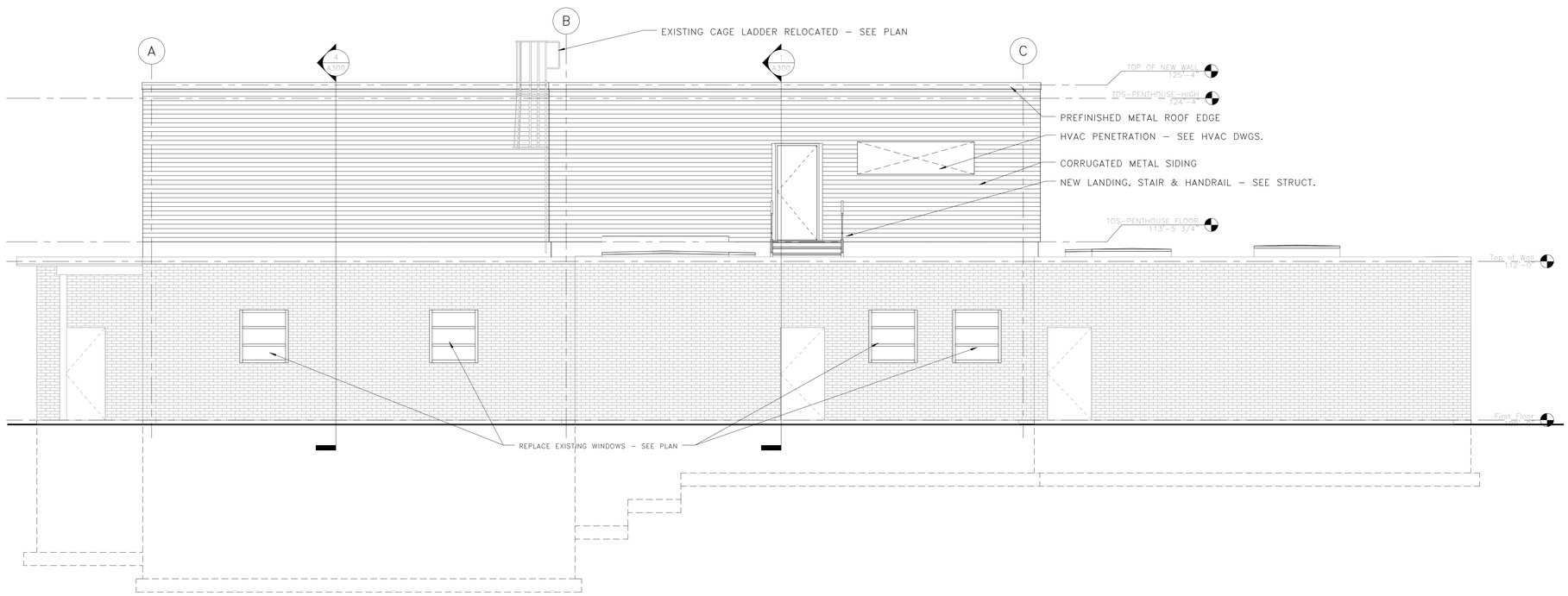

2 EXTERIOR ELEVATION - WEST
1/4" = 1'-0"

FINAL CONSTRUCTION DOCUMENTS

Revisions:	Date

Dept. of Veterans Affairs
Medical Center
2500 Overlook Terrace
Middleton, WI 53750

ARCHITECT/ENGINEERS:

Henneman Engineering Inc.
Madison:
1232 Fourier Drive, Suite 101
Madison, Wisconsin 53717-1960
T 608.833.7000
F 608.833.6996
Email: info@henneman.com
Website: http://www.henneman.com
JOB NO. 11-7256
© 2005 Henneman Engineering Inc. / IL reg. #184-000245 (001-013372) (062-036272)

PROJECT LEADER:

CHEQUAMEGON BAY ENGINEERING, INC.
© CBE 2002-2011

ASHLAND, WI
211 6TH STREET WEST
ASHLAND, WI. 54806
PHONE: (715) 682-6004
FAX: (715) 682-6025

MILWAUKEE, WI
1109 N. MAYFAIR RD.
SUITE 208
MILWAUKEE, WI. 53226
PHONE: (414) 258-6004
FAX: (414) 258-6154

MINOCQUA, WI
7609 HWY 51 SOUTH
MINOCQUA, WI. 54548
PHONE: (715) 358-9300
FAX: (715) 358-6719

Drawing Title: EXTERIOR ELEVATIONS	Project Title: UPGRADE BUILDING 12 HEATING & VENTILATION PROJECT		Project Number: 607-11-101
			Building Number: 12
Approved: Project Director	Location: Madison, Wisconsin 53705		Drawing Number: A201
	Date: February 24, 2012	Checked:	Drawn: KJK

Office of Construction and Facilities Management
Department of Veterans Affairs

VA FORM 08-6231

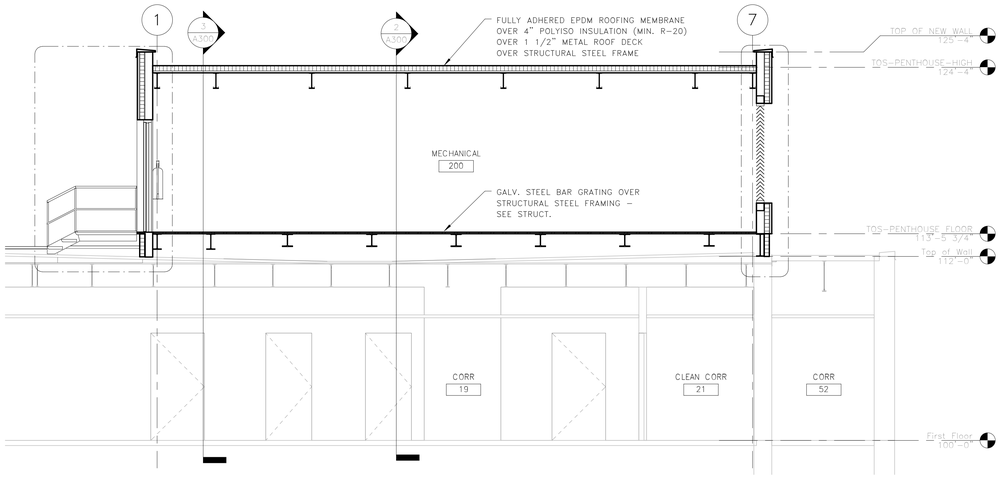

1 BUILDING SECTION
1/4" = 1'-0"

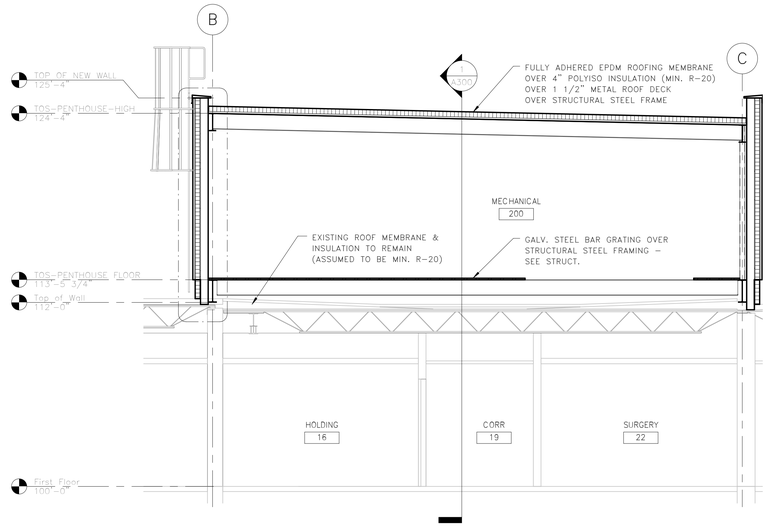

3 BUILDING SECTION
1/4" = 1'-0"

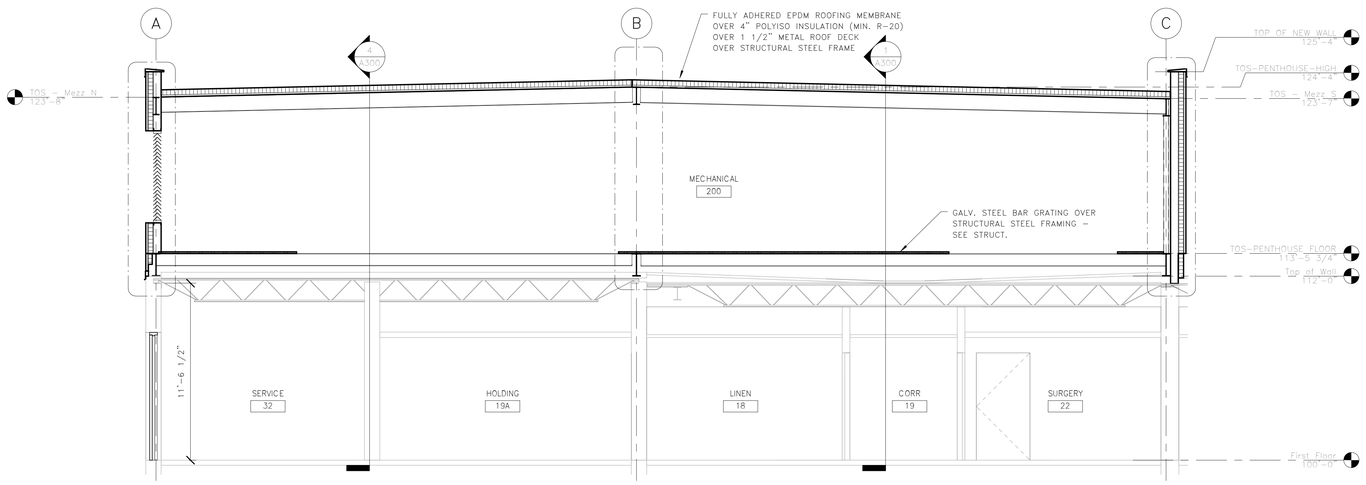

2 BUILDING SECTION
1/4" = 1'-0"

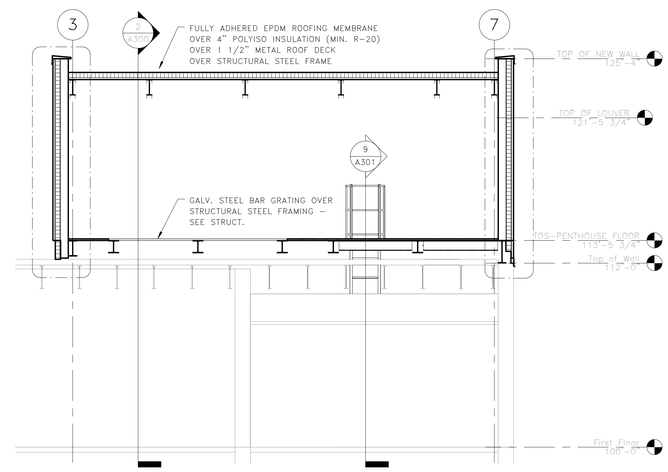

4 BUILDING SECTION
1/4" = 1'-0"

FINAL CONSTRUCTION DOCUMENTS

Revisions:	Date

Dept. of Veterans Affairs
Medical Center
2500 Overlook Terrace
Middleton, WI 53750

ARCHITECT/ENGINEERS:

Henneman Engineering Inc.
Madison:
1232 Fourier Drive, Suite 101 **T** 608.833.7000
Madison, Wisconsin 53717-1960 **F** 608.833.6996
Email: info@henneman.com
Website: http://www.henneman.com
JOB NO. 11-7256
© 2005 Henneman Engineering Inc. / IL reg. #184-000245 (001-013372) (062-036272)

PROJECT LEADER:

CHEQUAMEGON BAY ENGINEERING, INC.
© CBE 2002-2011

ASHLAND, WI
211 6TH STREET WEST
ASHLAND, WI. 54806
PHONE: (715) 682-6004
FAX: (715) 682-6025

MILWAUKEE, WI
1109 N. MAYFAIR RD.
SUITE 208
MILWAUKEE, WI. 53226
PHONE: (414) 258-6004
FAX: (414) 258-6154

MINOCQUA, WI
7609 HWY 51 SOUTH
MINOCQUA, WI. 54548
PHONE: (715) 358-9300
FAX: (715) 358-6719

Drawing Title	Project Title	Project Number	
BUILDING SECTIONS	UPGRADE BUILDING 12 HEATING & VENTILATION PROJECT	607-11-101	Office of Construction and Facilities Management
Approved: Project Director	Location: Madison, Wisconsin 53705	Building Number: 12	
	Date: February 24, 2012 / Checked / Drawn: KJK	Drawing Number: A300	Department of Veterans Affairs

VA FORM 08-6231

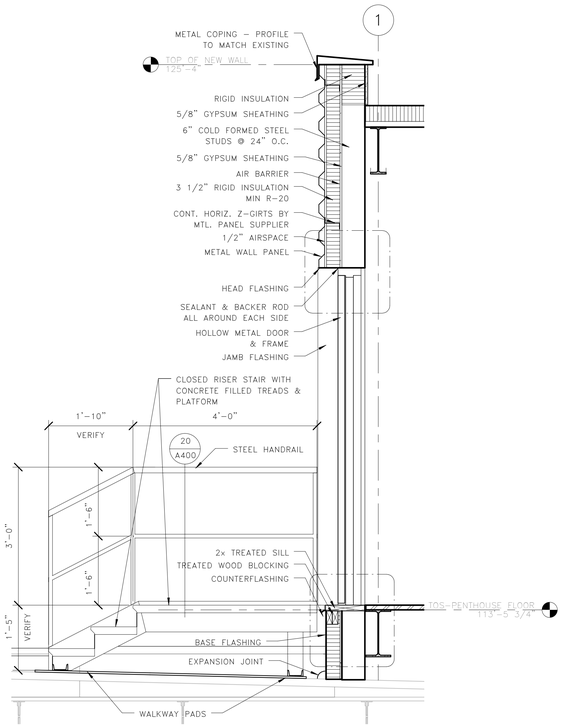

1 WALL SECTION
3/4" = 1'-0"

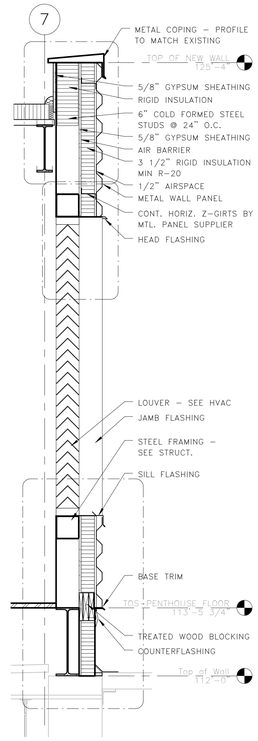

2 WALL SECTION
3/4" = 1'-0"

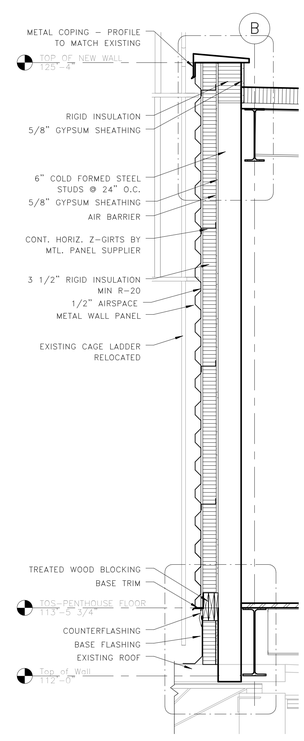

3 WALL SECTION
3/4" = 1'-0"

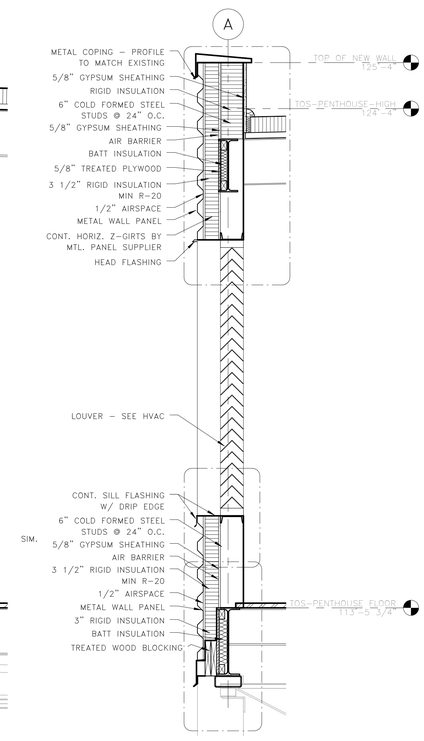

4 WALL SECTION
3/4" = 1'-0"

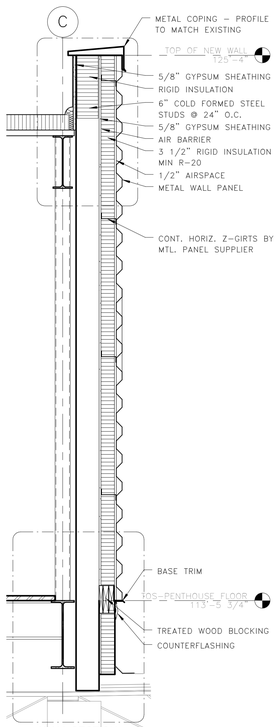

5 WALL SECTION
3/4" = 1'-0"

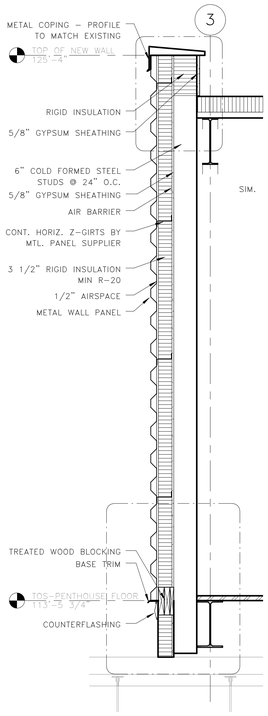

6 WALL SECTION
3/4" = 1'-0"

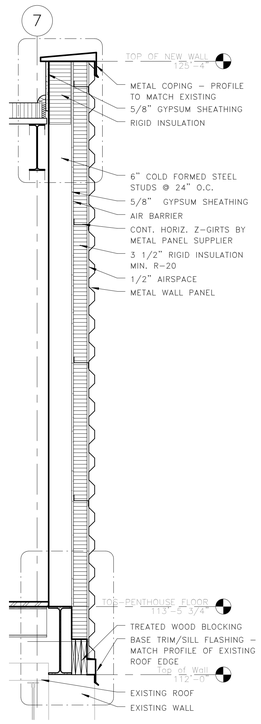

7 WALL SECTION
3/4" = 1'-0"

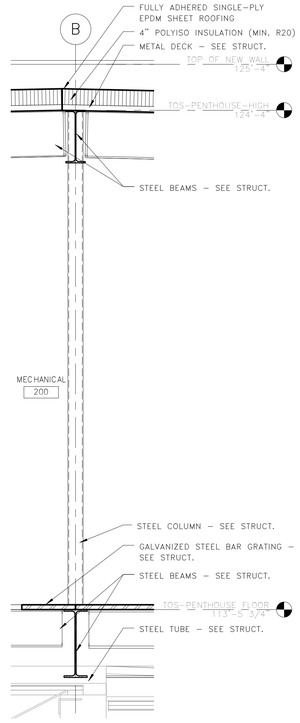

8 WALL SECTION
3/4" = 1'-0"

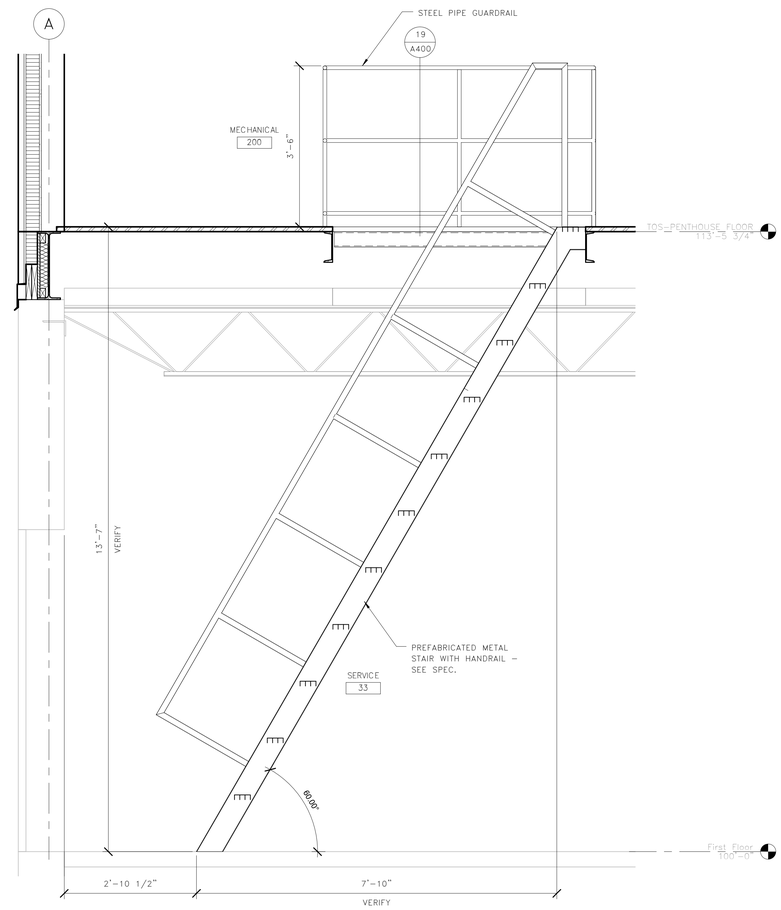

9 Stair Section - Interior
3/4" = 1'-0"

FINAL CONSTRUCTION DOCUMENTS

Revisions:	Date

Dept. of Veterans Affairs
Medical Center
2500 Overlook Terrace
Middleton, WI 53750

ARCHITECT/ENGINEERS:

Henneman Engineering Inc.
Madison:
1232 Fourier Drive, Suite 101 T 608.833.7000
Madison, Wisconsin 53717-1960 F 608.833.6996
Email: info@henneman.com
Website: http://www.henneman.com
JOB NO. 11-7256
© 2005 Henneman Engineering Inc. / IL reg. #184-000245 (001-013372) (062-036272)

PROJECT LEADER:

CHEQUAMEGON BAY ENGINEERING, INC.
© CBE 2002-2011

ASHLAND, WI
211 6TH STREET WEST
ASHLAND, WI. 54806
PHONE: (715) 682-6004
FAX: (715) 682-6020

MILWAUKEE, WI
1109 N. MAYFAIR RD.
SUITE 208
MILWAUKEE, WI. 53226
PHONE: (414) 258-6004
FAX: (414) 258-6154

MINOCQUA, WI
7609 HWY 51 SOUTH
MINOCQUA, WI. 54548
PHONE: (715) 356-9300
FAX: (715) 358-6719

Drawing Title: WALL SECTIONS	Project Title: UPGRADE BUILDING 12 HEATING & VENTILATION PROJECT		Project Number: 607-11-101
Approved: Project Director	Location: Madison, Wisconsin 53705		Building Number: 12
	Date: February 24, 2012	Checked:	Drawing Number: A301
		Drawn: KJK	

Office of Construction and Facilities Management
Department of Veterans Affairs

VA FORM 08-6231

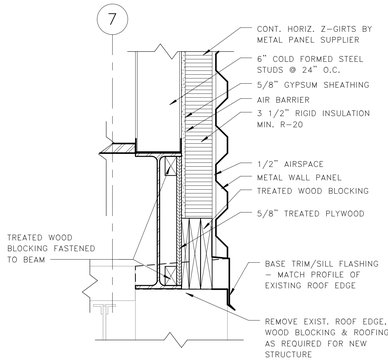

1 NEW WALL AT EXISTING ROOF EDGE
1 1/2" = 1'-0"

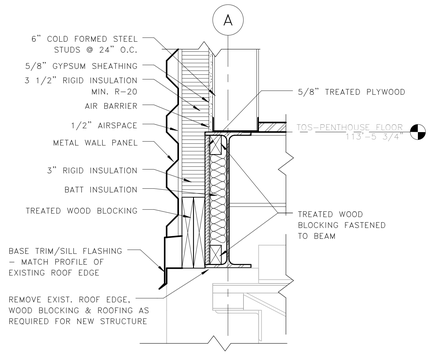

2 NEW WALL AT EXISTING ROOF EDGE
1 1/2" = 1'-0"

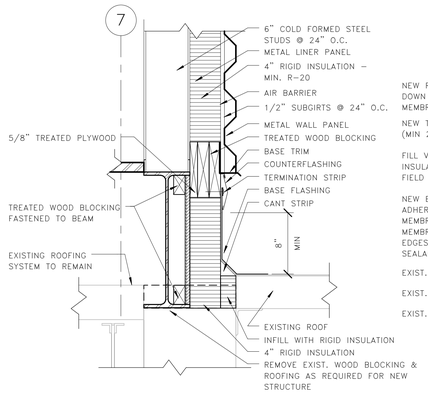

3 NEW WALL AT EXISTING ROOF
1 1/2" = 1'-0"

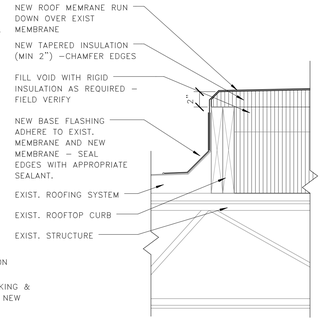

4 INFILL AT EXIST. MECH. CURB
1 1/2" = 1'-0"

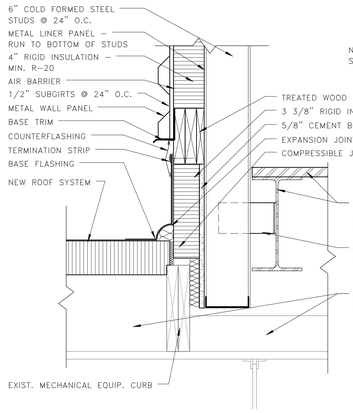

5 NEW WALL AT EXISTING ROOF
1 1/2" = 1'-0"

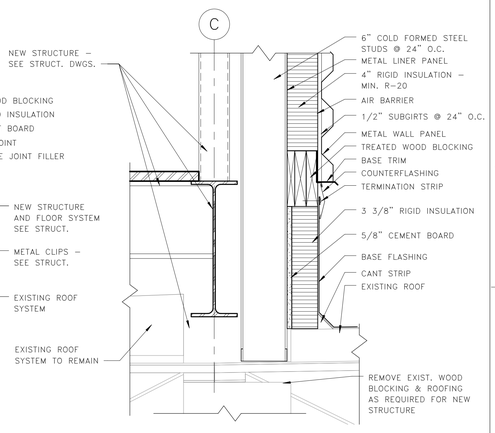

6 NEW WALL AT EXISTING ROOF
1 1/2" = 1'-0"

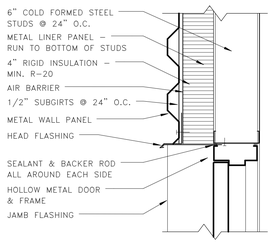

7 DOOR HEAD
1 1/2" = 1'-0"

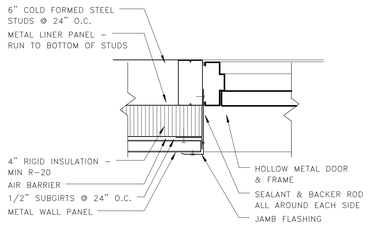

8 DOOR JAMB
1 1/2" = 1'-0"

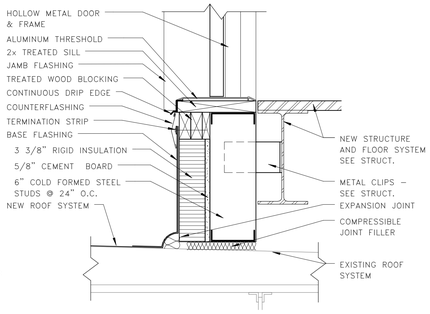

9 DOOR SILL
1 1/2" = 1'-0"

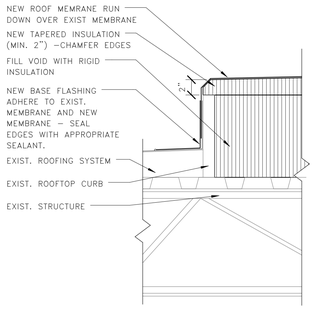

10 INFILL AT EXIST. MECH. CURB
1 1/2" = 1'-0"

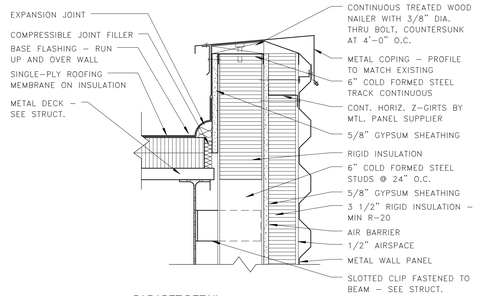

11 PARAPET DETAIL
1 1/2" = 1'-0"

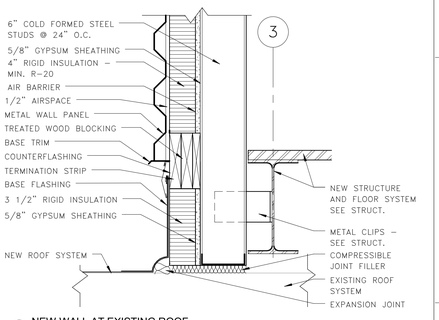

12 NEW WALL AT EXISTING ROOF
1 1/2" = 1'-0"

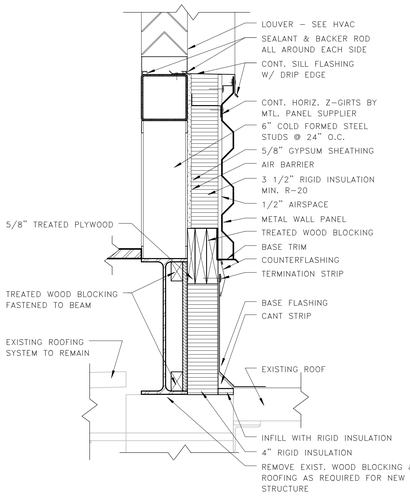

13 NEW WALL AT EXISTING ROOF
1 1/2" = 1'-0"

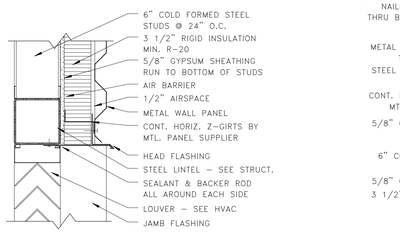

14 LOUVER HEAD
1 1/2" = 1'-0"

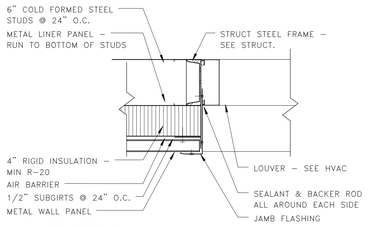

15 LOUVER JAMB
1 1/2" = 1'-0"

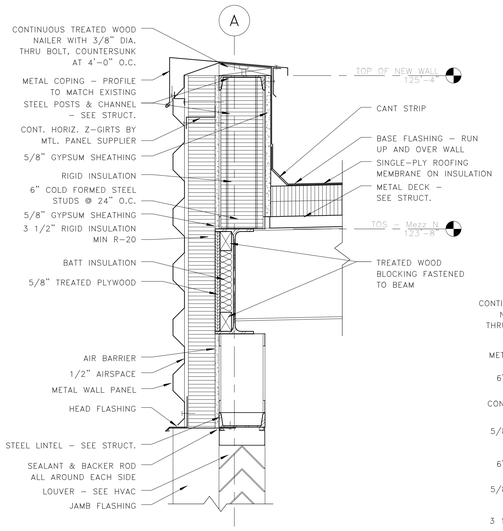

16 PARAPET DETIAL
1 1/2" = 1'-0"

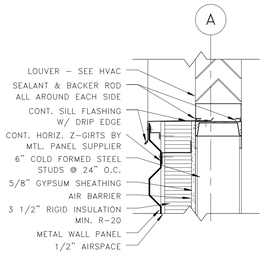

17 LOUVER SILL
1 1/2" = 1'-0"

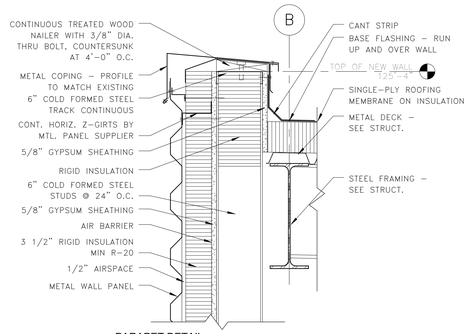

18 PARAPET DETAIL
1 1/2" = 1'-0"

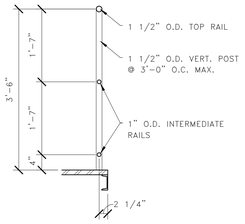

19 GUARDRAIL DETAIL
3/4" = 1'-0"

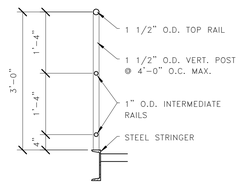

20 HANDRAIL DETAIL
3/4" = 1'-0"

FINAL CONSTRUCTION DOCUMENTS

Revisions:	Date

Dept. of Veterans Affairs
Medical Center
2500 Overlook Terrace
Middleton, WI 53750

ARCHITECT/ENGINEERS:

Henneman Engineering Inc.
Madison:
1232 Fourier Drive, Suite 101 — T 608.833.7000
Madison, Wisconsin 53717-1960 — F 608.833.6996
Email: info@henneman.com
Website: http://www.henneman.com
JOB NO. 11-7256
© 2005 Henneman Engineering Inc. I.S. reg. #184-000242 (081-013372) (062-036272)

PROJECT LEADER:

CHEQUAMEGON BAY ENGINEERING, INC.
© CBE 2002-2011
ASHLAND, WI
211 6TH STREET WEST
ASHLAND, WI 54806
PHONE: (715) 682-6004
FAX: (715) 682-6023
MILWAUKEE, WI
1109 N. MAYFAIR RD.
SUITE 208
MILWAUKEE, WI, 53226
PHONE: (414) 258-6004
FAX: (414) 258-6154
MINOCQUA, WI
7609 HWY 51 SOUTH
MINOCQUA, WI, 54548
PHONE: (715) 356-5300
FAX: (715) 356-6719

Drawing Title	Project Title	Project Number	Office of Construction and Facilities Management
DETAILS	UPGRADE BUILDING 12 HEATING & VENTILATION PROJECT	607-11-101	
Approved: Project Director	Location: Madison, Wisconsin 53705	Building Number: 12	
	Date: February 24, 2012 / Checked / Drawn: KJK	Drawing Number: A400	Department of Veterans Affairs

VA FORM 08-6231

STRUCTURAL NOTES

GENERAL

1. THESE STRUCTURAL NOTES DO NOT REPLACE THE PROJECT SPECIFICATIONS, DETAILS OR DRAWINGS. THESE NOTES ARE APPLICABLE UNLESS NOTED OTHERWISE ON STRUCTURAL DRAWINGS OR SPECIFICATIONS.
2. USE LATEST EDITION OR REVISION FOR ALL REFERENCED CODES AND/OR STANDARDS.
3. CONSULT ARCHITECTURAL, MECHANICAL, PLUMBING, AND ELECTRICAL DRAWINGS FOR LOCATION AND DIMENSIONS OF CURBS, PADS, INSERTS, SLEEVES, DRIPS, REGLETS, REVEALS, DEPRESSIONS, AND OTHER PROJECT REQUIREMENTS NOT SHOWN ON STRUCTURAL DRAWINGS.
4. SIZE AND LOCATION OF ALL ROOF, FLOOR, AND WALL OPENINGS TO BE VERIFIED WITH MECHANICAL AND ELECTRICAL CONTRACTORS REQUIRING SUCH OPENINGS.
5. CONSULT ARCHITECT FOR ANY NECESSARY DIMENSIONS WHICH ARE NOT SHOWN ON PLANS. SCALING OF DRAWINGS IS NOT PERMITTED.
6. SIMILAR PORTIONS OF THE BUILDING SHALL HAVE SIMILAR DETAILING UNLESS NOTED OTHERWISE.
7. ELEVATIONS SHOWN ON PLANS ARE TO TOP OF STEEL, CONCRETE, OR PLYWOOD SHEATHING, UNLESS OTHERWISE NOTED.
8. ELEVATIONS SHOWN ON PLAN ARE BASED ON 100'-0"=908.00 DATUM. SEE SITE SURVEY.
9. ALL WORK SHALL CONFORM TO OSHA REQUIREMENTS.
10. STRUCTURAL MEMBERS INCLUDING JOISTS, SLABS, BEAMS, TRUSSES, COLUMNS AND WALLS ARE DESIGNED FOR "IN PLACE" LOADS. CONTRACTOR IS RESPONSIBLE FOR BRACING, WITHOUT OVERSTRESSING, ALL STRUCTURAL ELEMENTS (AS REQUIRED AT ANY STAGE OF CONSTRUCTION) UNTIL COMPLETION OF THIS PROJECT.
11. IN NO CASE SHALL STRUCTURAL ALTERATIONS OR WORK AFFECTING A STRUCTURAL MEMBER BE MADE, UNLESS APPROVED BY THE ENGINEER.
12. SUBMIT REPRODUCIBLE COPY OF ALL STRUCTURAL SHOP DRAWINGS IN CONFORMANCE OR IN ADDITION TO SUBMITTAL REQUIREMENTS AS SPECIFIED.

EXISTING CONSTRUCTION NOTES

1. EXISTING STRUCTURE TO REMAIN IS SHOWN SCREENED (SHADED). EXISTING STRUCTURE TO BE REMOVED IS GENERALLY NOT SHOWN ON STRUCTURAL DRAWINGS.
2. CONTRACTOR TO VERIFY GRADES, SIZES, LOCATIONS, ELEVATIONS AND CONDITIONS OF ALL ITEMS ON PLANS AND DETAILS MARKED EXISTING (X OR EX) PRIOR TO FABRICATION AND ERECTION OF ANY MATERIALS. NOTIFY ARCHITECT OF ANY DISCREPANCIES OR QUESTIONS.
3. ALL EXISTING CONSTRUCTION AFFECTED BY REMOVAL OF EXISTING CONSTRUCTION OR SUPPORTIVE MEMBERS SHALL BE ADEQUATELY SHORED UNTIL NEW SUPPORTIVE MEMBERS ARE IN PLACE. DESIGN OF SHORING IS THE RESPONSIBILITY OF THE CONTRACTOR.
4. WHERE NEW CONSTRUCTION CONNECTS TO OR IS ADJACENT TO EXISTING CONSTRUCTION, FIELD MEASUREMENTS SHALL BE TAKEN, PRIOR TO FABRICATION TO VERIFY DIMENSIONS, ELEVATIONS, , AND CONDITIONS OF THE EXISTING STRUCTURAL MEMBERS, DUCTWORK, EQUIPMENT, ETC. DISCREPANCIES SHOULD BE REPORTED TO THE ARCHITECT IMMEDIATELY SO CORRECTIVE MEASURES MAY BE TAKEN TO ASSURE PROPER ALIGNMENT.

STRUCTURAL STEEL NOTES

1. FABRICATION AND ERECTION OF STRUCTURAL STEEL SHALL CONFORM WITH THE AISC (AMERICAN INSTITUTE OF STEEL CONSTRUCTION), "MANUAL OF STEEL CONSTRUCTION", LATEST EDITION.
2. ALL STEEL DETAILS AND CONNECTIONS SHALL BE IN ACCORDANCE WITH THE REQUIREMENTS OF THE AISC "SPECIFICATIONS FOR STRUCTURAL STEEL BUILDINGS, ALLOWABLE STRESS DESIGN AND PLASTIC DESIGN", LATEST EDITION.
3. ALL WELDING SHALL BE BY WELDERS HOLDING CURRENT VALID AWS CERTIFICATES IN THE TYPE OF WELD REQUIRED.
4. SHOP CONNECTIONS NOT SPECIFICALLY DETAILED ON THE DRAWINGS SHALL CONFORM TO STANDARD DETAILS 1-3/S300 IF POSSIBLE. IF ALTERNATE DETAIL IS REQUIRED FABRICATOR SHOULD SUBMIT EITHER A REQUEST FOR A DETAIL OR A PROPOSED ALTERNATE CONNECTION TO THE ENGINEER.
5. ALTERNATE CONNECTIONS WILL BE ACCEPTED ONLY WITH THE WRITTEN APPROVAL OF THE ENGINEER. HOWEVER, THE ENGINEER SHALL BE THE SOLE JUDGE OF ACCEPTABILITY AND THE CONTRACTOR'S BID SHALL ANTICIPATE THE USE OF THOSE SPECIFIC DETAILS SHOWN ON THE DRAWINGS. THE FABRICATOR SHALL BE RESPONSIBLE FOR THE DESIGN OF ANY ALTERNATE DETAILS PROPOSED. ALL CONNECTIONS SHALL BE DESIGNED FOR AISC ASD NINTH EDITION TYPE 2 FRAMING (SHEAR ONLY) UNLESS OTHERWISE NOTED.
6. WHEN NO REACTIONS ARE SHOWN, DESIGN CONNECTION TO SUPPORT A REACTION VALUE EQUAL TO THE AISC TABULATED ALLOWABLE UNIFORM LOAD VALUE FOR THE GIVEN SHAPE, GRADE OF STEEL, AND SPAN LENGTH DIVIDED BY TWO, FOR THE PARTICULAR BEAM IN QUESTION (6 KIPS MINIMUM). NO CONNECTIONS SHALL USE LESS THAN TWO BOLTS IN A ROW TO CARRY ABOVE BEAM REACTIONS.
7. USE A325N BOLTS UNLESS NOTED OTHERWISE.
8. WHERE WOOD MEMBERS ATTACH TO STEEL, PROVIDE CONNECTIONS. ALSO PROVIDE HOLES FOR LAG BOLTS.
9. SPLICES SHALL BE ALLOWED ONLY AT LOCATIONS SPECIFICALLY INDICATED ON THE STRUCTURAL DRAWINGS UNLESS APPROVED OTHERWISE BY THE ENGINEER IN WRITING.
10. OVERSIZED OR SLOTTED HOLES SHALL NOT BE USED FOR ANY CONNECTIONS UNLESS SPECIFICALLY INDICATED ON THE DRAWINGS OR APPROVED IN WRITING BY THE ENGINEER.
11. PROVIDE WELDED STIFFENER PLATES ON BOTH SIDES OF THE WEB OF BEAMS AT POINTS OF CONCENTRATED LOAD. MINIMUM PLATE THICKNESS TO BE 3/8" OR FLANGE THICKNESS OF COLUMNS ABOVE OR BELOW, WHICHEVER IS GREATER.
12. THE FILLER BEAMS SHOULD BE EQUALLY SPACED BETWEEN THE SUPPORTS UNLESS OTHERWISE NOTED ON THE DRAWINGS.
13. ALL BEAM COPES MUST BE MADE TO A RADIUS (1" MINIMUM).
14. ALL BUTT AND FULL PENETRATION WELDS SHALL BE MADE USING RUN OFF TABS WHICH SHALL BE TRIMMED FLUSH AND GROUND SMOOTH AFTER WELD IS COMPLETED.
15. PROVIDE HOLES IN ALL STEEL AS REQUIRED TO PREVENT ANY ACCUMULATION OF WATER DURING ERECTION. ALL PENETRATIONS THROUGH MAIN MEMBERS SHALL NOT EXCEED 1 1/2" IN DIAMETER AND SHALL BE GROUND SMOOTH.
16. ALL WELDS INDICATED SHALL MEET THE MINIMUM WELD SIZE SPECIFIED BY THE CURRENT AISC MANUAL OF STEEL DESIGN. (SINGLE PASS AS REQUIRED).
17. CUTS, HOLES, COPING, ETC. REQUIRED FOR WORK OF OTHER TRADES SHALL BE SHOWN ON THE SHOP DRAWINGS AND MADE IN THE SHOP. CUTS OR BURNING OF HOLES IN STRUCTURAL STEEL MEMBERS IN THE FIELD WILL NOT BE PERMITTED.
18. PROVIDE ANY NECESSARY TEMPORARY BRACING OR GUYS TO PROVIDE LATERAL SUPPORT OF THE BUILDING UNTIL PERMANENT FRAME IS COMPLETELY INSTALLED.
19. INSTALL EXPANSION BOLTS IN ACCORDANCE WITH THE ICBO REPORT RECOMMENDATIONS.
20. FRAME AROUND ALL ROOF OPENINGS LARGER THAN 10" IN DIAMETER WITH WELDED CHANNEL FRAME SEE 9/S300.

MASONRY NOTES

1. CONTROL JOINTS IN MASONRY WALLS, UNLESS OTHERWISE NOTED, SHALL BE LOCATED AS FOLLOWS:
   MAXIMUM OF 4'-0" FROM CORNERS.
   MAXIMUM OF 40'-0" O.C.
   AT ALL CHANGES IN WALL HEIGHT OR THICKNESS.
   AT CHASES AND RECESSES FOR PIPING, COLUMNS, FIXTURES, ETC.
   AT ABUTMENT OF WALLS TO COLUMNS.
2. VERTICAL CELLS TO BE GROUTED SHALL HAVE VERTICAL ALIGNMENT SUFFICIENT TO MAINTAIN A CLEAR, UNOBSTRUCTED CONTINUOUS CELL.
3. PROVIDE CLEANOUTS AT THE BOTTOM OF ALL VERTICALLY GROUTED CORES. HORIZONTAL GROUTING OF WALL SHALL BE CONTINUOUS BETWEEN CONTROL JOINTS OR VERTICAL SUPPORTS.
4. PROVIDE A BOND BEAM WITH 2-#5 CONTINUOUS AT ALL LOCATIONS WHERE A SLAB OR BEAM BEARS ON THE MASONRY WALL AND WHERE THE WALL IS NOT GROUTED SOLID VERTICALLY BENEATH THE BEARING LOCATION. EXTEND BOND BEAM A MINIMUM OF 2'-0" BEYOND EACH BEARING LOCATION.
5. WHERE CONCRETE FILLED BOND BEAMS INTERSECT AT CORNERS AT DIFFERENT ELEVATIONS, RUN EACH BOND BEAM AROUND CORNER FOR TWO BLOCK LENGTHS MINIMUM BEFORE TERMINATING.
6. PROVIDE (1) #5 VERTICALLY BELOW BEAM AND LINTEL BEARINGS IN A FULLY GROUTED CORE.
7. PROVIDE REINFORCING BARS AT LOCATIONS INDICATED ON THE DRAWINGS. LAP 40 BAR DIAMETERS AT SPLICES IN VERTICAL WALL REINFORCING AND 30 BAR DIAMETERS ELSEWHERE UNLESS NOTED OTHERWISE.
8. SEE TYPICAL DETAIL FOR HORIZONTAL BOND BEAM REINFORCEMENT AT MASONRY WALL CORNERS AND INTERSECTIONS.
9. MAINTAIN A 1/2" GAP BETWEEN THE TOP OF ALL NON-BEARING INTERIOR MASONRY WALLS AND THE UNDERSIDE OF THE STRUCTURE ABOVE.
10. ALL MASONRY SHALL BE BUILT TIGHT TO COLUMNS & STRUCTURAL MEMBERS.
11. GROUT ALL HEAD AND BED JOINTS FULL.
12. WHERE THE END OF A WOOD STRUCTURAL MEMBER IS BUILT INTO AN EXTERIOR WALL, A 1/2" AIR SPACE SHALL BE PROVIDED AT THE SIDES, TOP AND END OF SUCH MEMBER.
13. IN MASONRY BEARING WALLS, NO CHASES, RISERS, CONDUIT OR TOOTHING OF MASONRY SHALL OCCUR WITHIN 1'-6" OF CENTERLINE OF BEAM BEARING OR LOAD CONCENTRATION.
14. CORE FILL GROUT SHALL BE MECHANICALLY VIBRATED TO ELIMINATE VOIDS DURING PLACEMENT.
15. BOND BEAMS, PILASTERS, LINTELS AND CORES CONTAINING VERTICAL REINFORCING SHALL BE FILLED WITH CONCRETE HAVING f'c = 3,000 PSI UNLESS NOTED OTHERWISE. COARSE AGGREGATE SHALL BE PEA GRAVEL. FILLING WITH MORTAR IS NOT ACCEPTABLE
16. SEE SPECIFICATIONS FOR DOVETAIL ANCHOR REQUIREMENTS.

STRUCTURAL ABBREVIATION LEGEND

AB	– ANCHOR BOLT	ID	– INSIDE DIAMETER
ALT	– ALTERNATE	I.F.	– INSIDE FACE
AGG	– AGGREGATE	INSUL	– INSULATION
ALUM	– ALUMINUM	INT	– INTERIOR
ARCH	– ARCHITECT / ARCHITECTURAL	JBE	– JOIST BEARING ELEVATION
		JT	– JOINT
BLDG	– BUILDING		
BLK	– BLOCK (CMU)	L	– STEEL ANGLE DESIGNATION
BM	– BEAM	LG	– LENGTH / LONG
BOT	– BOTTOM	LLBB	– LONG LEGS BACK-TO-BACK
BRG	– BEARING	LLH	– LONG LEG HORIZ
		LLV	– LONG LEG VERT
C	– CHANNEL DESIGNATION	LP	– LOW POINT
CB	– CATCH BASIN	LVL	– LAMINATED VENEER LUMBER
CI	– CAST IRON		
CIP	– CAST-IN-PLACE	MAX	– MAXIMUM
CJ	– CONSTRUCTION JOINT	MSW	– MASONRY BEARING WALL
CL	– CENTER LINE	MIN	– MINIMUM
CLG	– CEILING	MSW	– MASONRY SHEAR WALL
CLJ	– CONTROL JOINT	MTL	– METAL
CLR	– CLEAR DISTANCE		
CMU	– CONCRETE MASONRY UNIT	NIC	– NOT IN CONTRACT
COL	– COLUMN	NOM	– NOMINAL
CONC	– CONCRETE	NTS	– NOT TO SCALE
CONT	– CONTINUOUS	N-S	– NORTH-SOUTH DIRECTION
CONTR	– CONTRACTOR		
		OC	– ON CENTER
D	– DEPTH	OD	– OUTSIDE DIAMETER
DBA	– DECK BEARING ANGLE	O.F.	– OUTSIDE FACE
DIA	– DIAMETER	OH	– OVER HEAD
DIM	– DIMENSION	OPP	– OPPOSITE
DN	– DOWN		
DTL	– DETAIL	PERIM	– PERIMETER
DWG	– DRAWING	PC	– PLUMBING CONTRACTOR
DWL	– DOWEL	P/C	– PRECAST / PRESTRESSED
		PL	– STEEL PLATE DESIGNATION
EA	– EACH	PT	– POINT
EC	– ELECTRICAL CONTRACTOR	P/T	– POST TENSIONED
EJ	– EXPANSION JOINT		
EL	– ELEVATION	R	– RADIUS
ELEV	– ELEVATOR	RD	– ROOF DRAIN
ENG	– ENGINEER	REINF	– REINFORCING
EQ	– EQUAL	REQD	– REQUIRED
EW	– EACH WAY	RO	– ROUGH OPENING
E-W	– EAST-WEST DIRECTION		
EXIST	– EXISTING	SCHED	– SCHEDULE
EXP	– EXPANSION	SIM	– SIMILAR
EXT	– EXTERIOR	SHT	– SHEET
		SLBB	– SHORT LEGS BACK-TO-BACK
FD	– FLOOR DRAIN	SPA	– SPACE / SPACES
FDN	– FOUNDATION	SPEC	– SPECIFICATION
FE	– FIRE EXTINGUISHER	SQ	– SQUARE
FF	– FINISH FLOOR	SS	– STAINLESS STEEL
FTG	– FOOTING	STL	– STEEL
FUT	– FUTURE	STR	– STRUCTURAL
FV	– FIELD VERIFY		
		THK	– THICK / THICKNESS
GA	– GAUGE	TL	– TOP OF LEDGE ELEVATION
GALV	– GALVANIZED	TP	– TOP OF PIER ELEVATION
GC	– GENERAL CONTRACTOR	TS	– (SEE HSS DESIGNATION)
GL	– GRID LINE / COL LINE	TYP	– TYPICAL
		TW	– TOP OF WALL ELEVATION
HC	– HVAC CONTRACTOR		
HK	– HOOK	UD	– URINAL SLAB DEPRESSION
HM	– HOLLOW METAL	UNO	– UNLESS NOTED OTHERWISE
HORIZ	– HORIZONTAL		
HP	– HIGH POINT	VERT	– VERTICAL
HSS	– HOLLOW STRUCTURAL SECTION (REPLACES "TS" DESIGNATION)	VIF	– VERIFY IN FIELD
		W	– WIDTH
HT	– HEIGHT	W/	– WITH
HVAC	– HEATING, VENTILATING & AIR CONDITIONING	W/O	– WITHOUT
		WD	– WOOD
		WF	– WIDE FLANGE DESIGNATION
		WP	– WORKING POINT
		WSBW	– WOOD STUD BEARING WALL
		WWF	– WELDED WIRE FABRIC

DESIGN DATA

DESIGN CODE:
WISCONSIN COMMERCIAL BUILDING CODE – 2009 IBC

DESIGN STRESSES

STRUCTURAL STEEL:
TUBE STEEL ..... Fy = 46,000 PSI
STEEL PLATE, CHANNELS AND ROLLED ANGLES ..... Fy = 36,000 PSI
ALL OTHER ROLLED SHAPES ..... Fy = 50,000 PSI

MASONRY:
EXISTING MASONRY (ASSUMED) ..... f'm = 1,500 PSI

BOLTS:
ANCHOR F1554
HIGH STRENGTH A325N
CONCRETE ANCHOR – SCREW TYPE ..... SIMPSON TITEN-HD OR APPROVED EQUAL
EXPANSION ..... WEDGE TYPE

WELDING ELECTRODES E70XX

SOIL LOAD INFORMATION:
SOIL BEARING PRESSURE ..... Q = 3,000 PSF

LIVE LOADS:

MECHANICAL AREAS / GRATING	MAX OF: EXPLICIT EQUIPMENT WEIGHTS OR 40 PSF DISTRIBUTED LOAD OR 300# POINT LOAD
ROOF	SEE SNOWLOAD INFO

SNOW LOAD INFORMATION:

GROUND SNOWLOAD (Pg)	30 psf
SNOW EXPOSURE FACTOR (Ce)	1.00
SNOW LOAD IMPORTANCE FACTOR (Is)	1.00
THERMAL FACTOR (Ct)	1.00
FLAT ROOF SNOW LOAD (Pf)	21.0 psf
DESIGN/BALANCED SNOW LOAD (Ps)	21.0 psf
NEW DRIFTS AT E&W OF PENTHOUSE	w=9' pd=40 psf
NEW DRIFTS AT S OF PENTHOUSE	w=12' pd=50 psf

WIND LOAD INFORMATION:

BASIC WIND SPEED	90 MPH
BUILDING OCCUPANCY CATEGORY	II
WIND LOAD IMPORTANCE FACTOR (Iw)	1
WIND EXPOSURE	B
INTERNAL PRESSURE COEFFICIENTS	± .18

COMPONENTS AND CLADDING (GROSS WIND PRESSURES):
(FOR ZONE DEFINITIONS & DIAGRAMS SEE DESIGN GUIDE ASCE/SEI 7 SECTION 6)

MAIN BUILDING

WIDTH OF PRESSURE COEFFICIENT ZONE (a)	4.8 ft		
TRIBUTARY WIND LOAD AREAS:	10 ft²	100 ft²	500 ft²
ROOF (GABLE/HIP/MONOSLOPE):			
NEGATIVE ZONE 1	−14.6 psf	−13.3 psf	−13.3 psf
NEGATIVE ZONE 2	−24.4 psf	−15.8 psf	−15.8 psf
NEGATIVE ZONE 3	−36.8 psf	−15.8 psf	−15.8 psf
WALLS:			
ZONE 4	−14.4 psf	−12.5 psf	−11.1 psf
ZONE 5	−17.8 psf	−13.9 psf	−11.1 psf
POSITIVE PRESSURE ALL ZONES	13.3 psf	11.4 psf	10.0 psf
PARAPETS:			
INTERIOR ZONE	33.3 psf	22.7 psf	21.4 psf
	−23.3 psf	−20.8 psf	−16.7 psf
EDGE ZONE	45.7 psf	22.7 psf	21.4 psf
	−26.7 psf	−20.8 psf	−16.7 psf
OVERHANGS/CANOPIES:			
INTERIOR ZONE	−21.0 psf	−19.8 psf	−19.8 psf
EDGE ZONE	−34.6 psf	−10.0 psf	−10.0 psf

SEISMIC LOAD INFORMATION:

SEISMIC USE GROUP / OCCUPANCY CATEGORY	II
SEISMIC LOAD IMPORTANCE FACTOR (Ie)	1.00
SEISMIC SITE CLASS	D
MAPPED SPECTRAL RESPONSE ACCELERATION (Ss)	0.105
MAPPED SPECTRAL RESPONSE ACCELERATION (S1)	0.044
SPECTRAL RESPONSE COEFFICIENT (Sds)	0.112
SPECTRAL RESPONSE COEFFICIENT (Sd1)	0.070
SEISMIC DESIGN CATEGORY	B
BASIC SEISMIC FORCE RESISTING SYSTEM	BEARING WALL SYSTEMS ORDINARY PLAIN MASONRY SHEAR WALLS
RESPONSE MODIFICATION FACTOR	1.5
SEISMIC RESPONSE COEFFICIENT (Cs)	.075
DESIGN BASE SHEAR	0.075W
ANALYSIS PROCEDURE	EQUIVALENT LATERAL FORCE Fx=0.075Wx

STRUCTURAL STEEL LEGEND

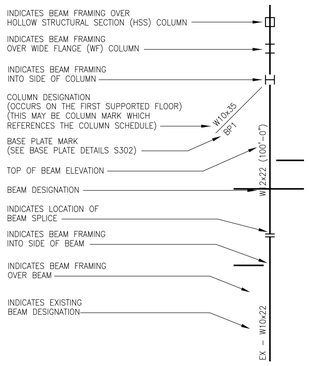

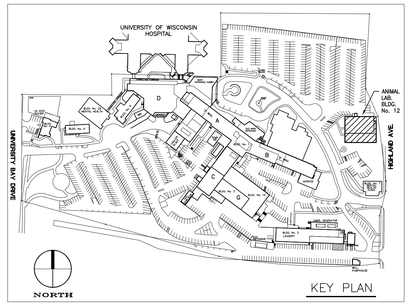

FINAL CONSTRUCTION DOCUMENTS

Revisions:	Date

CONSULTANTS:

Henneman Engineering Inc.
Madison:
1232 Fourier Drive, Suite 101 T 608.833.7000
Madison, Wisconsin 53717-1960 F 608.833.6996
Email: info@henneman.com
Website: http://www.henneman.com
JOB NO. 11-7256
© 2005 Henneman Engineering Inc. / IL reg. #184-000246 (001-013372) (062-036272)

PROJECT LEADER:

CHEQUAMEGON BAY ENGINEERING, INC.
CBE 2002-2011
ASHLAND, WI
211 6TH STREET WEST
ASHLAND, WI. 54806
PHONE: (715) 682-6004
FAX: (715) 682-6025
MILWAUKEE, WI
1109 N. MAYFAIR RD., SUITE 208
MILWAUKEE, WI. 53226
PHONE: (414) 258-6004
FAX: (414) 258-6154

Drawing Title: STRUCTURAL GENERAL NOTES AND LEGENDS	Project Title: UPGRADE BUILDING 12 HEATING + VENTILATION PROJECT	Project Number: 607-11-101	Office of Facilities Management
Approved: Project Director	Location: Madison, Wisconsin 53705	Building Number: 12	
	Date: February 24, 2012 / Checked By: HEI / Drawn By: HEI	Drawing Number: S001	Department of Veterans Affairs

VA FORM 08-6231, OCT 1978

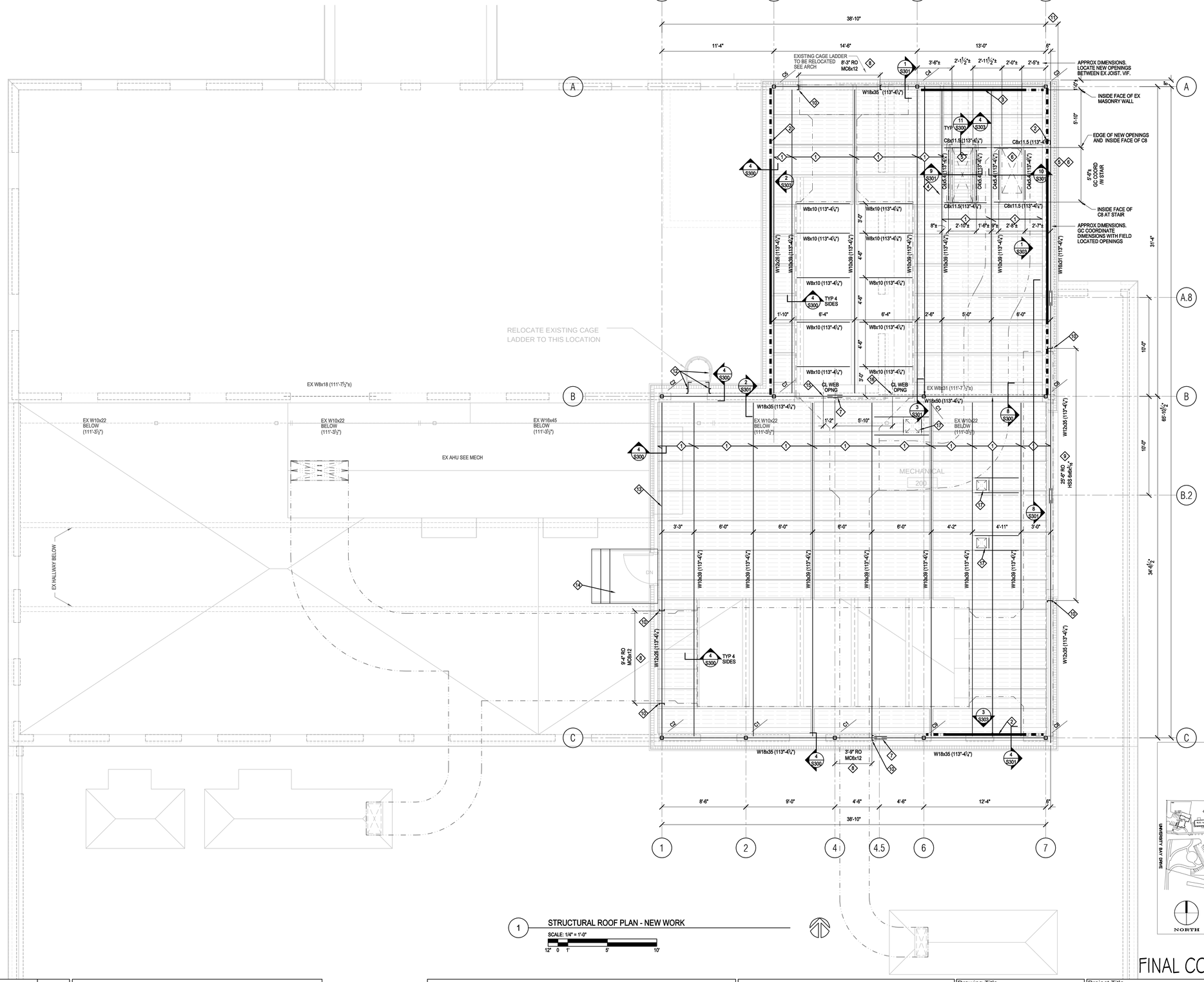

1 STRUCTURAL ROOF PLAN - NEW WORK

SCALE: 1/4" = 1'-0"

12" 0 1' 5' 10'

GENERAL NOTES:

1. VERIFY EXISTING BUILDING DIMENSIONS

KEYED NEW WORK NOTES (SHEET S102):

1. GALVANIZED STEEL BAR GRATING 1½x⅛ (19W4) 6'-6" MAX SPAN PROVIDE FASTENERS PER MANUFACTURER SYSTEM. COORDINATE W/ MECH FOR REQUIRED PENETRATIONS.
2. ROD X BRACING SEE ELEVATION S303
3. HSS DIAGONAL BRACE SEE ELEVATION S303
4. PIPE HANDRAILS W GATE CHAIN AT STAIR OPENING, SEE ARCH
5. SAWCUT STAIR OPENING BETWEEN EXISTING JOISTS. COORDINATE LOCATION IN FIELD. APPROX OPENING SIZE 25½" x57".
6. SAWCUT OPENING FOR NEW MECH DUCT BETWEEN EXISTING JOISTS. COORDINATE LOCATION IN FIELD. APPROX OPENING SIZE 25½" x56".
7. BEAM SPLICE SEE 3A/S300
8. SEE MECH FOR DUCT PENETRATION OR LOUVER. MC8x7 GIRTS T&B. COORDINATE ELEV W/ MECH.
9. SEE MECH FOR LOUVER. HSS6x6x3/16" GIRTS T&B. COORDINATE ELEV W/ MECH.
10. MC8x7 WIND POST AT GIRTS. COORDINATE LOCATION WITH MECH. PROVIDE SLIP CONNECTION AT TOP PER DETAIL 10/S300
11. GC FIELD VERIFY WALL DIMENSIONS AND ALIGNMENTS. SEE NOTES ON DETAILS 5-7/S301 ADJUST DIMENSIONS AS REQUIRED.
12. RELOCATED CAGE LADDER. PROVIDE VERTICAL MC8x7 SUPPORTS FOR RE ATTACHMENT. PROVIDE CONNECTION PER DETAIL 11/S301. GC COORDINATE DIMENSIONS.
13. COORDINATE ERECTION PHASING WITH MECHANICAL. DELAY ERECTION OF LOWER FRAMING AT GRIDLINE 1 AS REQUIRED
14. PREFABRICATED STEEL LANDING, STAIR AND GUARDRAIL. SEE ARCH.
15. WEB PENETRATION AT W18 FOR MECH PIPING. CENTER VERTICALLY IN BEAM WEB. RECTANGULAR OPENING 9"Hx32W", 1" ROUNDED CORNERS.
16. WEB PENETRATION AT W18 FOR MECH PIPING. CENTER VERTICALLY IN BEAM WEB. 8"Ø ROUND OPENING
17. DUCT SEE MECH. PROVIDE WELDED CHANNEL FRAME PER 9/S300

COLUMN SCHEDULE

MARK	SECTION	BASEPLATE DETAIL
C1	HSS4x4x0¼"	1/S302
C2	HSS4x4x0¼"	2/S302
C3	HSS4x4x0¼"	3/S302
C4	HSS4x4x0¼"	4/S302
C5	HSS4x4x0¼"	5/S302
C6	HSS4x4x0¼"	6/S302
C7	HSS4x4x0¼"	7/S302
C8	HSS4x4x0¼"	8/S302
C9	HSS4x4x0¼"	9/S302

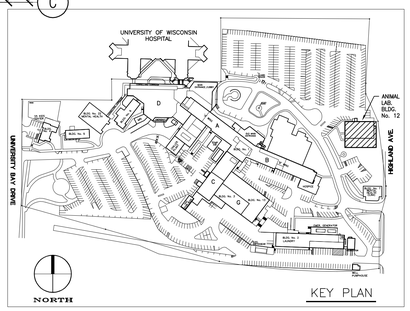

FINAL CONSTRUCTION DOCUMENTS

Revisions:	Date

CONSULTANTS:

Henneman Engineering Inc.
Madison:
1232 Fourier Drive, Suite 101 T 608.833.7000
Madison, Wisconsin 53717-1960 F 608.833.6996
Email: info@henneman.com
Website: http://www.henneman.com
JOB NO. 11-7256
© 2005 Henneman Engineering Inc. / IL reg. #184-000245 (001-013372) (062-036272)

PROJECT LEADER:

CHEQUAMEGON BAY ENGINEERING, INC.
CBE 3052-2013

ASHLAND, WI
211 6TH STREET WEST
ASHLAND, WI. 54806
PHONE: (715) 682-6004
FAX: (715) 682-6025

MILWAUKEE, WI
1109 N. MAYFAIR RD., SUITE 208
MILWAUKEE, WI. 53226
PHONE: (414) 258-6004
FAX: (414) 258-6154

Drawing Title: STRUCTURAL PENTHOUSE PLAN - NEW WORK	Project Title: UPGRADE BUILDING 12 HEATING + VENTILATION PROJECT		Project Number: 607-11-101	Office of Facilities Management
Approved: Project Director	Location: Madison, Wisconsin 53705		Building Number: 12	
	Date: February 24, 2012	Checked By: HEI / Drawn By: HEI	Drawing Number: S102	Department of Veterans Affairs

VA FORM 08-6231, OCT 1978

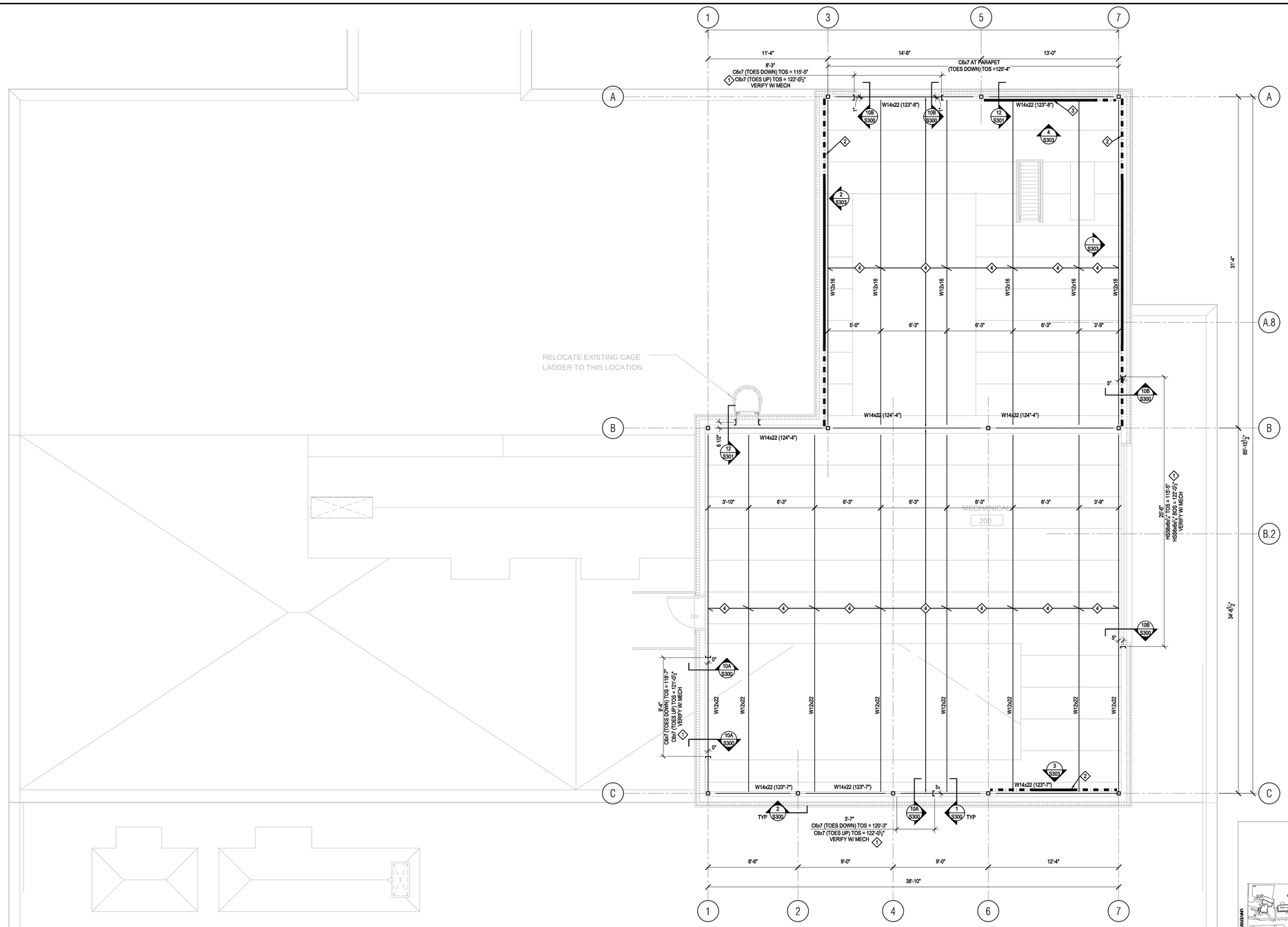

GENERAL NOTES:

1. VERIFY EXISTING BUILDING DIMENSIONS
2. FOR ROOF OPENINGS OVER 10"Ø PROVIDE WELDED CHANNEL FRAME PER DETAIL 9/S300

KEYED NEW WORK NOTES (SHEET S103):

1. SEE 12/S300 FOR HORIZONTAL GIRT CONNECTIONS
2. ROD X BRACING SEE ELEVATION S303
3. DIAGONAL HSS BRACING SEE ELEVATION S303
4. GALV 1½" TYPE B 20 GA ROOF DECK

1 STRUCTURAL ROOF PLAN - NEW WORK

SCALE: 1/4" = 1'-0"

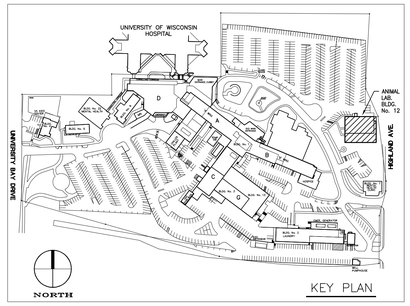

KEY PLAN

FINAL CONSTRUCTION DOCUMENTS

Revisions:	Date

CONSULTANTS:

Henneman Engineering Inc.
Madison:
1232 Fourier Drive, Suite 101 **T** 608.833.7000
Madison, Wisconsin 53717-1960 **F** 608.833.6996
Email: info@henneman.com
Website: http://www.henneman.com
JOB NO. 11-7256
© 2005 Henneman Engineering Inc. / IL reg. #184-000245 (001-013372) (062-036272)

PROJECT LEADER:

CHEQUAMEGON BAY ENGINEERING, INC.
DBE 3992-3101

ASHLAND, WI
211 6TH STREET WEST
ASHLAND, WI. 54806
PHONE: (715) 682-6004
FAX: (715) 682-6025

MILWAUKEE, WI
1109 N. MAYFAIR RD., SUITE 208
MILWAUKEE, WI. 53226
PHONE: (414) 258-6004
FAX: (414) 258-6154

Drawing Title: STRUCTURAL ROOF PLAN - NEW WORK	Project Title: UPGRADE BUILDING 12 HEATING + VENTILATION PROJECT		Project Number: 607-11-101	Office of Facilities Management
Approved: Project Director			Building Number: 12	
	Location: Madison, Wisconsin 53705		Drawing Number: S103	Department of Veterans Affairs
	Date: February 24, 2012	Checked By: HEI / Drawn By: HEI		

VA FORM 08-6231, OCT 1978

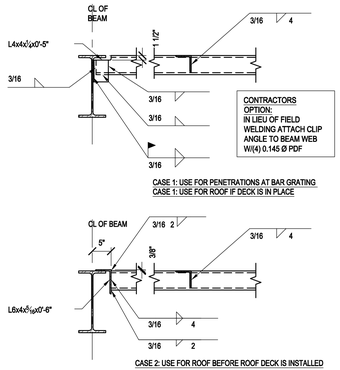

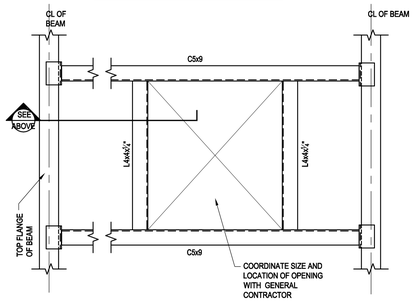

9 PLAN- WELDED CHANNEL FRAME

SCALE: 1" = 1'-0"

12" 0 1' 2'

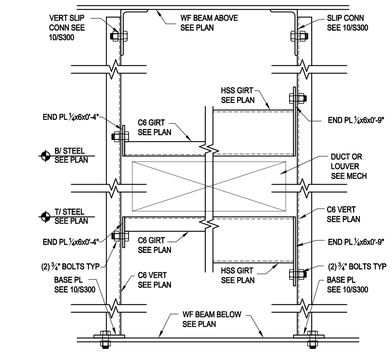

12 C6 GIRT CONN

SCALE: 1-1/2" = 1'-0"

12" 6" 0 1'

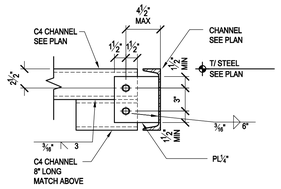

11 C4 TO C8 CONNECTION

SCALE: 1-1/2" = 1'-0"

12" 6" 0 1'

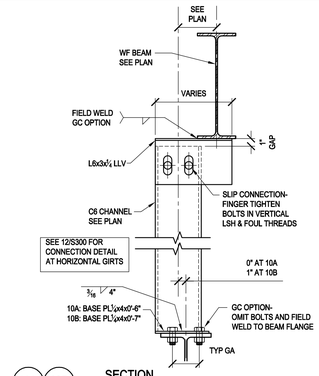

10A 10B SECTION

SCALE: 1-1/2" = 1'-0"

12" 6" 0 1'

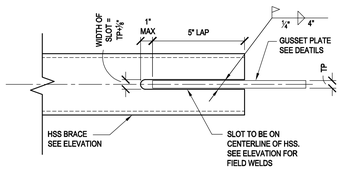

8 GUSSET SLOT @ HSS

NO SCALE

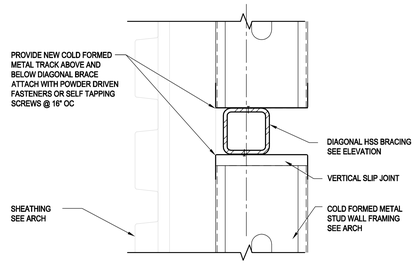

7 WALL STUDS AT HSS BRACING

NO SCALE

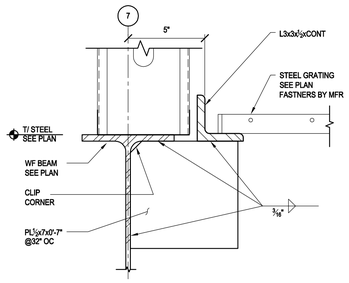

6 BEARING EDGE OF GRATING ANGLE

NO SCALE

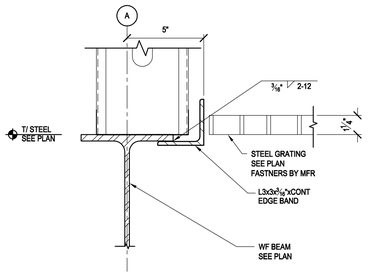

5 NON-BEARING EDGE OF GRATING ANGLE

NO SCALE

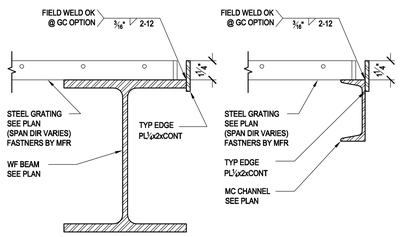

4 EDGE OF GRATING PLATE

NO SCALE

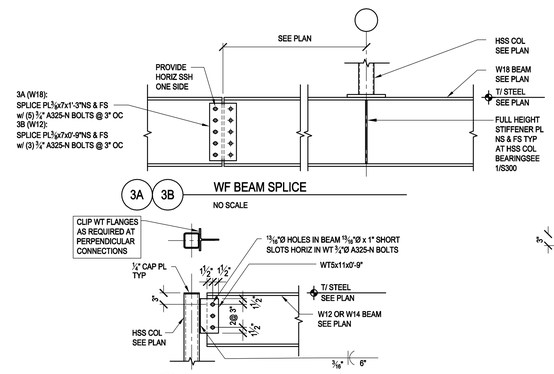

3A 3B WF BEAM SPLICE

NO SCALE

2 BEAM TO COLUMN- WT CONN

NO SCALE

CONNECTION SCHEDULE		
BEAM SIZE	"N" NO. OF ¾"Ø BOLTS	"L" MIN LENGTH
W8, W10	2	6"
W12, W14	3	9"
W16	4	12"
W18, W21	5	15"

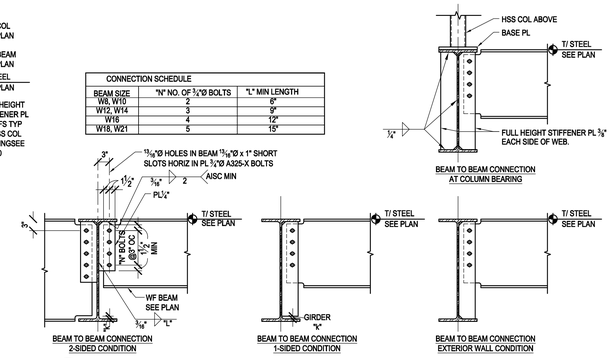

1 SINGLE PLATE CONNECTION

NO SCALE

FINAL CONSTRUCTION DOCUMENTS

Revisions:	Date

CONSULTANTS:

Henneman Engineering Inc.
Madison:
1232 Fourier Drive, Suite 101
Madison, Wisconsin 53717-1960
Email: info@henneman.com
Website: http://www.henneman.com
T 608.833.7000
F 608.833.6996
JOB NO. 11-7256
© 2003 Henneman Engineering Inc. / IL reg. #184-000246 (051-013373) (042-036372)

PROJECT LEADER:

CHEQUAMEGON BAY ENGINEERING, INC.
CBE 2002-2011
ASHLAND, WI
212 6TH STREET WEST
ASHLAND, WI, 54806
PHONE: (715) 682-6004
FAX: (715) 682-6025
MILWAUKEE, WI
1109 N. MAYFAIR RD., SUITE 208
MILWAUKEE, WI, 53226
PHONE: (414) 258-6004
FAX: (414) 258-6154

Drawing Title: STRUCTURAL DETAILS	Project Title: UPGRADE BUILDING 12 HEATING + VENTILATION PROJECT	Project Number: 607-11-101	Office of Facilities Management
Approved: Project Director	Location: Madison, Wisconsin 53705	Building Number: 12	
	Date: February 24, 2012 / Checked By: HEI / Drawn By: HEI	Drawing Number: S300	Department of Veterans Affairs

VA FORM 08-6231, OCT 1978

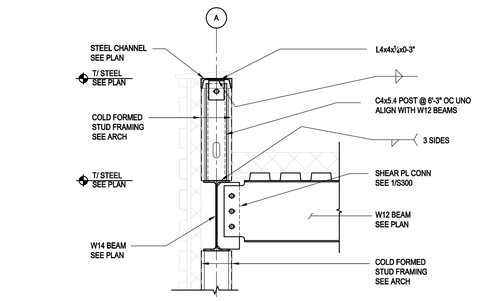

12 PARAPET AT NORTH WALL

SCALE: 1" = 1'-0"

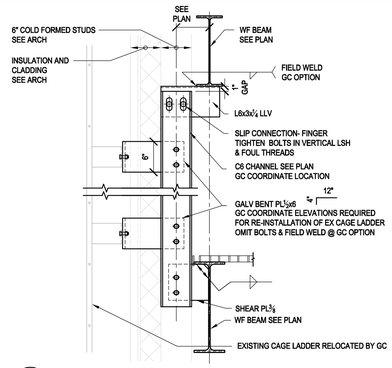

11 SUPPORT AT CAGE LADDER

SCALE: 1" = 1'-0"

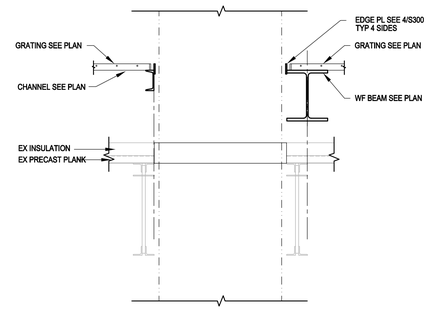

10 SECTION AT DUCT OPENING

SCALE: 1" = 1'-0"

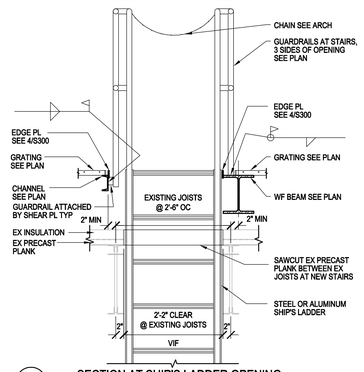

9 SECTION AT SHIP'S LADDER OPENING

SCALE: 3/4" = 1'-0"

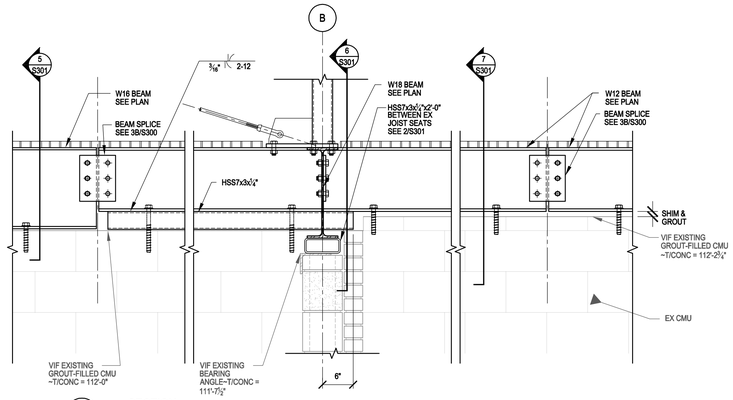

8 SECTION

SCALE: 1" = 1'-0"

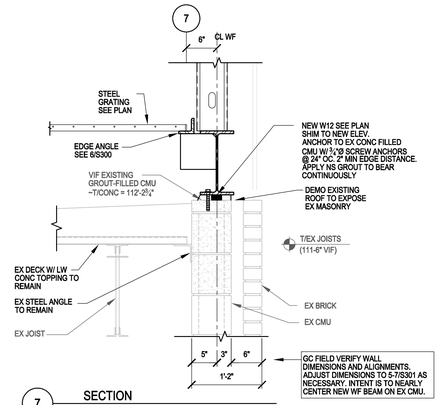

7 SECTION

SCALE: 1" = 1'-0"

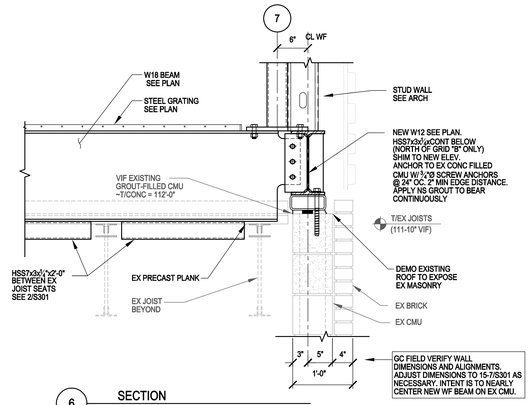

6 SECTION

SCALE: 1" = 1'-0"

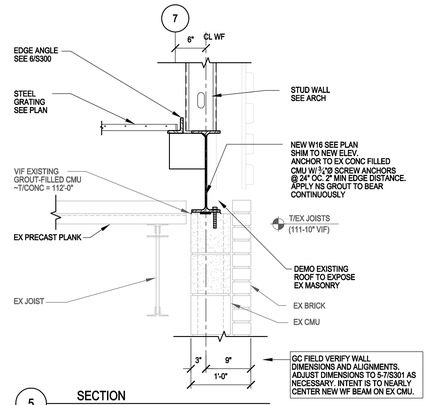

5 SECTION

SCALE: 1" = 1'-0"

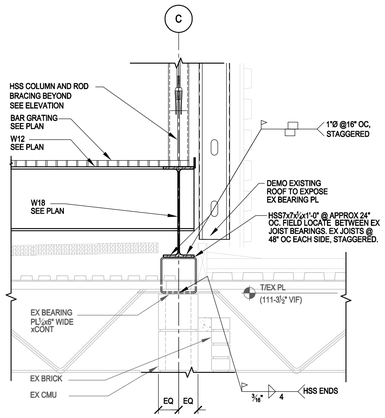

4 SECTION

SCALE: 1" = 1'-0"

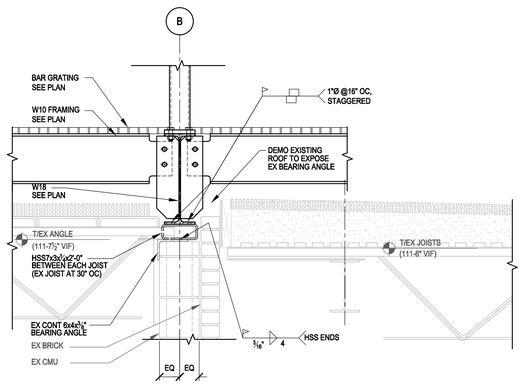

3 SECTION

SCALE: 1" = 1'-0"

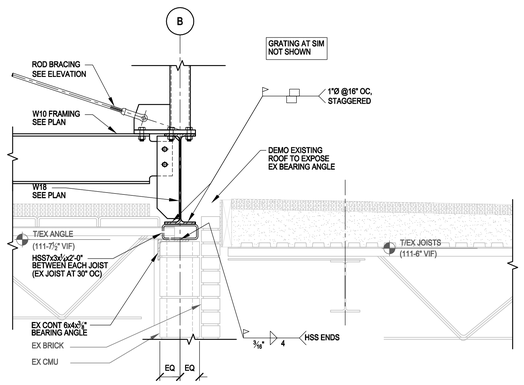

2 SECTION

SCALE: 1" = 1'-0"

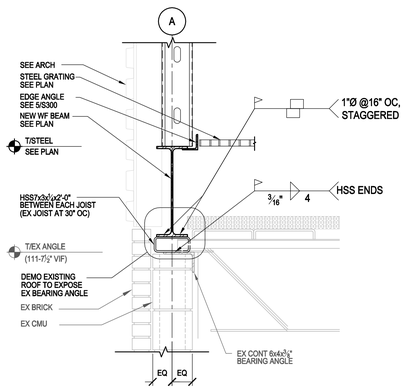

1 SECTION

SCALE: 1" = 1'-0"

FINAL CONSTRUCTION DOCUMENTS

Revisions:	Date

CONSULTANTS:

Henneman Engineering Inc.
Madison:
1232 Fourier Drive, Suite 101
Madison, Wisconsin 53717-1960
Email: info@henneman.com
Website: http://www.henneman.com
T 608.833.7000
F 608.833.6996

JOB NO. 11-7256

© 2005 Henneman Engineering Inc. / IL reg. #184-000245 (051-013373) (042-036272)

PROJECT LEADER:

CHEQUAMEGON BAY ENGINEERING, INC.
CBE 2002-2011
ASHLAND, WI
212 6TH STREET WEST
ASHLAND, WI. 54806
PHONE: (715) 682-6004
FAX: (715) 682-6025
MILWAUKEE, WI
1109 N. MAYFAIR RD., SUITE 208
MILWAUKEE, WI. 53226
PHONE: (414) 258-6004
FAX: (414) 258-6154

Drawing Title: STRUCTURAL DETAILS	Project Title: UPGRADE BUILDING 12 HEATING + VENTILATION PROJECT	Project Number: 607-11-101	Office of Facilities Management
Approved: Project Director	Location: Madison, Wisconsin 53705	Building Number: 12	
	Date: February 24, 2012 / Checked By: HEI / Drawn By: HEI	Drawing Number: S301	Department of Veterans Affairs

VA FORM 08-6231, OCT 1978

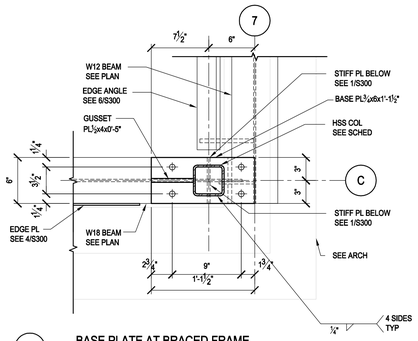

8 BASE PLATE AT BRACED FRAME

SCALE: 1" = 1'-0"

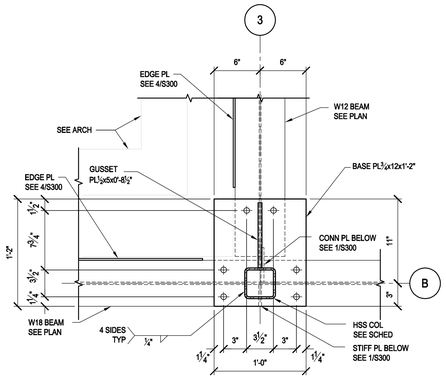

7 BASE PLATE AT BRACED FRAME

SCALE: 1" = 1'-0"

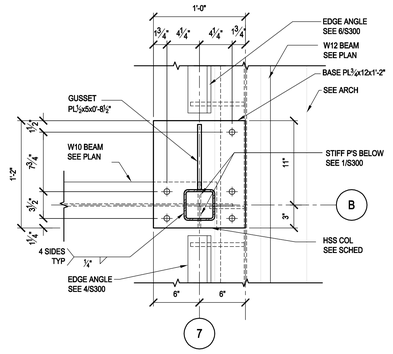

6 BASE PLATE AT BRACED FRAME

SCALE: 1" = 1'-0"

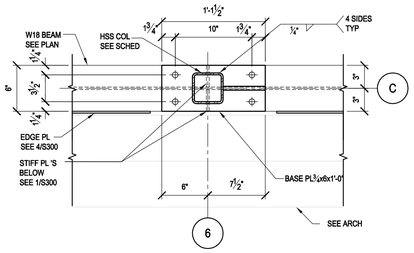

9 BASE PLATE AT BRACED FRAME

SCALE: 1" = 1'-0"

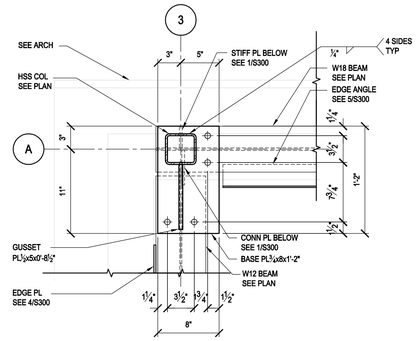

5 BASE PLATE AT BRACED FRAME

SCALE: 1" = 1'-0"

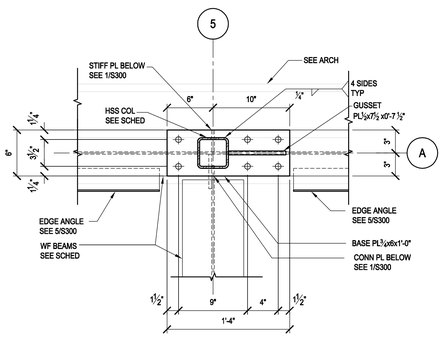

4 BASE PLATE AT BRACED FRAME

SCALE: 1" = 1'-0"

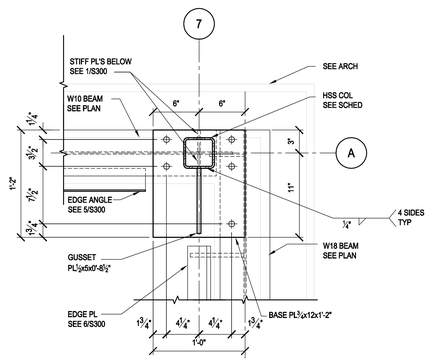

3 BASE PLATE AT BRACED FRAMES

SCALE: 1" = 1'-0"

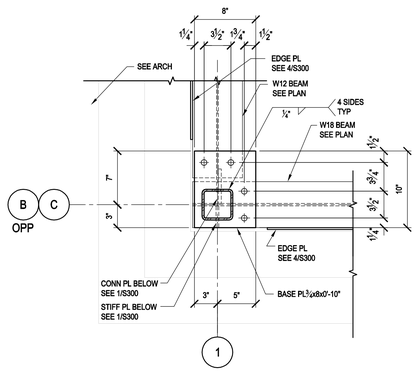

2 HSS BASE PLATE

SCALE: 1" = 1'-0"

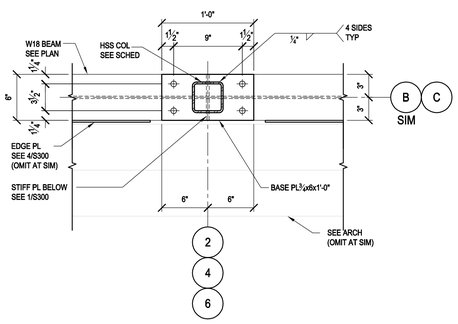

1 HSS BASE PLATE

SCALE: 1" = 1'-0"

FINAL CONSTRUCTION DOCUMENTS

Revisions:	Date

CONSULTANTS:

Henneman Engineering Inc.
Madison:
1232 Fourier Drive, Suite 101
Madison, Wisconsin 53717-1960
Email: info@henneman.com
Website: http://www.henneman.com
T 608.833.7000
F 608.833.6996
JOB NO. 11-7256

© 2005 Henneman Engineering Inc. / IL reg. #184-000245 (051-013373) (042-036272)

PROJECT LEADER:

CHEQUAMEGON BAY ENGINEERING, INC.
CBE 2002-2011
ASHLAND, WI
212 6TH STREET WEST
ASHLAND, WI. 54806
PHONE: (715) 682-6004
FAX: (715) 682-6025
MILWAUKEE, WI
1109 N. MAYFAIR RD., SUITE 208
MILWAUKEE, WI. 53226
PHONE: (414) 258-6004
FAX: (414) 258-6154

Drawing Title: STRUCTURAL DETAILS	Project Title: UPGRADE BUILDING 12 HEATING + VENTILATION PROJECT	Project Number: 607-11-101	Office of Facilities Management
Approved: Project Director	Location: Madison, Wisconsin 53705	Building Number: 12	
	Date: February 24, 2012 / Checked By: HEI / Drawn By: HEI	Drawing Number: S302	Department of Veterans Affairs

VA FORM 08-6231, OCT 1978

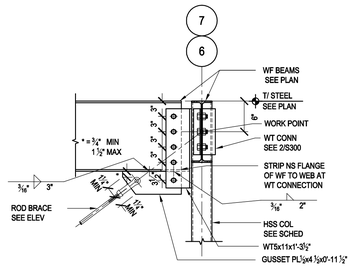

11 BEAM CONNECTION AT ROD BRACES FRAME

SCALE: 1" = 1'-0"

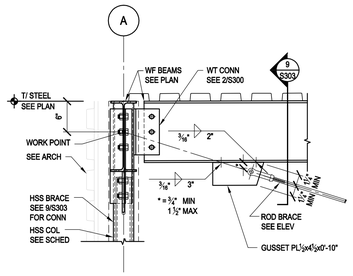

10 BEAM CONNECTION AT ROD BRACES

SCALE: 1" = 1'-0"

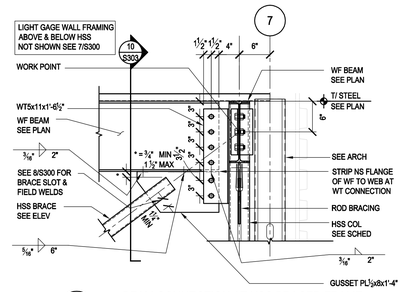

9 BEAM CONNECTION AT HSS BRACED FRAME

SCALE: 1" = 1'-0"

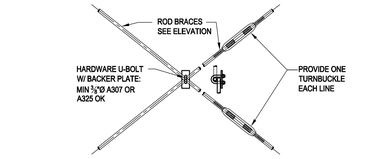

8B UBOLT ROD BRACE CROSSING

SCALE: 1" = 1'-0"

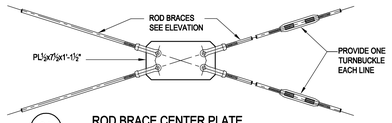

8A ROD BRACE CENTER PLATE

SCALE: 1" = 1'-0"

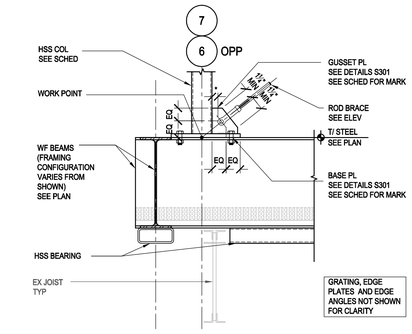

7 BASE CONNECTION AT ROD BRACES

SCALE: 1" = 1'-0"

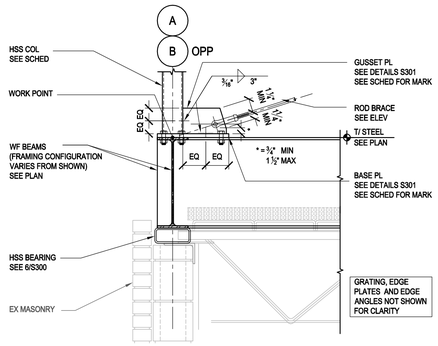

6 BASE CONNECTION AT ROD BRACES

SCALE: 1" = 1'-0"

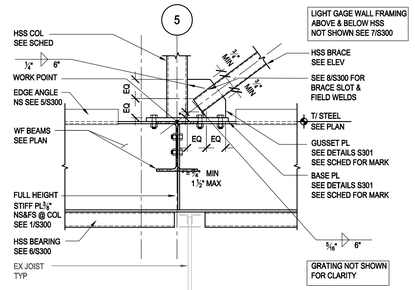

5 BASE CONNECTION AT HSS BRACED FRAME

SCALE: 1" = 1'-0"

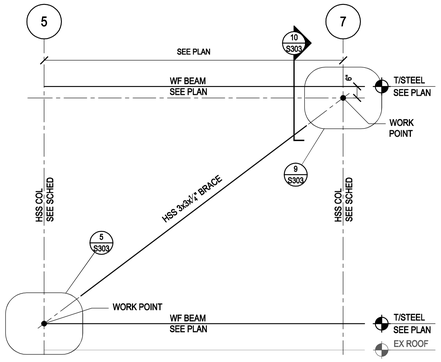

4 BRACED FRAME "A"

SCALE: 3/8" = 1'-0"

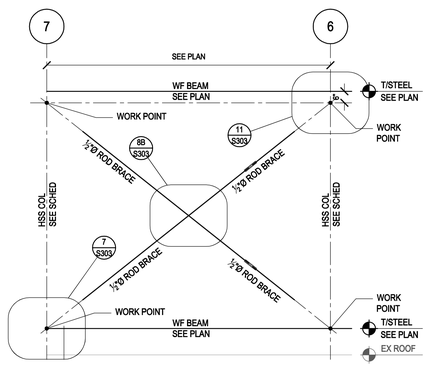

3 BRACED FRAME "C"

SCALE: 3/8" = 1'-0"

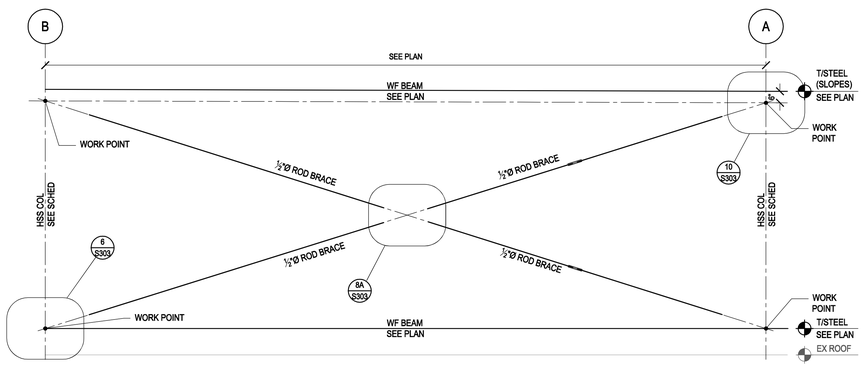

2 BRACED FRAME "3"

SCALE: 3/8" = 1'-0"

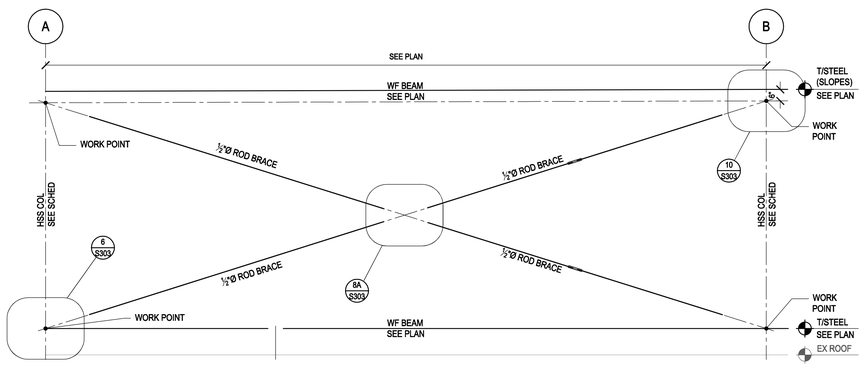

1 BRACED FRAME "7"

SCALE: 3/8" = 1'-0"

FINAL CONSTRUCTION DOCUMENTS

Revisions:	Date

CONSULTANTS:

Henneman Engineering Inc.
Madison:
1232 Fourier Drive, Suite 101
Madison, Wisconsin 53717-1960
Email: info@henneman.com
Website: http://www.henneman.com
T 608.833.7000
F 608.833.6996

JOB NO. 11-7256

© 2005 Henneman Engineering Inc. / IL reg. #184-000245 (051-013373) (042-036372)

PROJECT LEADER:

CHEQUAMEGON BAY ENGINEERING, INC.
CBE 2002-2011
ASHLAND, WI
212 6TH STREET WEST
ASHLAND, WI. 54806
PHONE: (715) 682-6004
FAX: (715) 682-6025
MILWAUKEE, WI
1109 N. MAYFAIR RD., SUITE 208
MILWAUKEE, WI. 53226
PHONE: (414) 258-6004
FAX: (414) 258-6154

Drawing Title: STRUCTURAL DETAILS	Project Title: UPGRADE BUILDING 12 HEATING + VENTILATION PROJECT	Project Number: 607-11-101	Office of Facilities Management
Approved: Project Director	Location: Madison, Wisconsin 53705	Building Number: 12	
	Date: February 24, 2012 / Checked By: HEI / Drawn By: HEI	Drawing Number: S303	Department of Veterans Affairs

VA FORM 08-6231, OCT 1978

HEATING/VENTILATING SYMBOL LIST

SYMBOL	DESCRIPTION
GS	GLYCOL WATER SUPPLY
GR	GLYCOL WATER RETURN
HWS	HOT WATER SUPPLY
HWR	HOT WATER RETURN
CH	CHILLED WATER SUPPLY
CHR	CHILLED WATER RETURN
D	DRAIN LINE
RL	REFRIGERANT LIQUID LINE
RS	REFRIGERANT SUCTION LINE
RD	REFRIGERANT DISCHARGE LINE
MU	MAKE UP WATER
B	BRINE SUPPLY
BR	BRINE RETURN
A	COMPRESSED AIR PIPING
HPS	HIGH PRESSURE STEAM SUPPLY PIPING
MPS	MEDIUM PRESSURE STEAM SUPPLY PIPING
LPS	LOW PRESSURE STEAM SUPPLY PIPING
HPR	HIGH PRESSURE STEAM RETURN PIPING
MPR	MEDIUM PRESSURE STEAM RETURN PIPING
LPR	LOW PRESSURE STEAM RETURN PIPING
CPD	CONDENSATE PUMP DISCHARGE PIPING
FW	FEED WATER PUMP PIPING
	BUTTERFLY VALVE
	GATE VALVE
	CHECK VALVE
	CALIBRATED BALANCE VALVE
	AUTOMATIC TWO-WAY CONTROL VALVE (ELECTRIC)
	AUTOMATIC THREE-WAY CONTROL VALVE (ELECTRIC)
	AUTOMATIC TWO-WAY CONTROL VALVE (PNEUMATIC)
	AUTOMATIC THREE-WAY CONTROL VALVE (PNEUMATIC)
	GLOBE VALVE
	BALL VALVE
	RELIEF VALVE
	PIPE ANCHOR
	THERMOMETER
	STEAM TRAP
	PRESSURE GAUGE
	MANUAL AIR VENT
	ELBOW TURNED UP
	ELBOW TURNED DOWN
	TEE - TOP OUTLET
	TEE - BOTTOM OUTLET
	SCREWED UNION
	FLANGED UNION
	PRESSURE REDUCING VALVE
	CONCENTRIC REDUCER
	ECCENTRIC REDUCER
	STRAINER
	GAGE COCK
	PIPE GUIDE
	CAP OR PLUG FOR < 2" BLIND FLANGE FOR > 2"
	VACUUM BREAKER
	FLOW MEASURING DEVICE
	EXISTING TO BE REMOVED
	FLEXIBLE PUMP OR PIPE CONNECTION
	SUPPLY AIR DUCT (TOWARD)
	SUPPLY AIR DUCT (AWAY)
	RETURN OR OUTDOOR AIR DUCT (TOWARD)
	RETURN OR OUTDOOR AIR DUCT (AWAY)
24/12 SUPPLY	FIRST NUMBER IS SIDE SHOWN SECOND NUMBER IS SIDE NOT SHOWN ARROWS INDICATE DIRECTION OF FLOW
24/12 RETURN/EXHAUST	
	TURNING VANES
	MANUAL VOLUME DAMPER
BD	BACKDRAFT DAMPER
M	MOTORIZED DAMPER
FSD	FIRE DAMPER / SMOKE DAMPER
S	DUCT SMOKE DETECTOR (BY E.C.)
	FLEXIBLE DUCT CONNECTION
	FLEXIBLE DUCT
	ACCESS PANEL
	INCLINED RISE (IN DIRECTION OF AIR FLOW)
	INCLINED DROP (IN DIRECTION OF AIR FLOW)
P	PRESSURE DROP
T	ROOM TEMPERATURE SENSOR
P	ROOM PRESSURE SENSOR
H	HUMIDISTAT
T	THERMOSTAT
	NEW CONNECTION TO EXISTING

MECHANICAL ABBREVIATIONS

ACU — AIR CONDITIONING UNIT
A/E — ARCHITECT/ENGINEER
AF — AIR FOIL
AFB — AIR FOIL BLADE
AFMS — AIR FLOW MEASURING STATION
AHU — AIR HANDLING UNIT
AD — ACCESS DOOR
AL — ALUMINUM
AP — ACCESS PANEL
BB — BASEBOARD
BC — BOOSTER COIL
BDD — BACKDRAFT DAMPER
BHP — BRAKE HORSEPOWER
BTU — BRITISH THERMAL UNIT
BWI — BACKWARD INCLINE
CC — COOLING COIL
CD — CEILING DIFFUSER
CFM — CUBIC FEET PER MINUTE
CONV — CONVECTOR
CUH — CABINET UNIT HEATER
CV — CONSTANT VOLUME
CW — COLD WATER
CWP — CHILLED WATER PUMP
CHR — CHILLED WATER RETURN
CH — CHILLED WATER SUPPLY
D — DRAIN
D&T — DRIP & TRAP ASSEMBLY
DA — DISCHARGE AIR
DB — DRY BULB
DCO — DOOR CUTOFF
DG — DOOR GRILLE
DN — DOWN
EXH — EXHAUST
EA — EXHAUST AIR
EAT — ENTERING AIR TEMPERATURE
E.C. — ELECTRICAL CONTRACTOR
EG — EXHAUST GRILLE
ER — EXHAUST REGISTER
EF — EXHAUST FAN
ET — ELECTRICAL TRADE
ETR — EXISTING TO REMAIN
EWT — ENTERING WATER TEMPERATURE
F — FURNACE
°F — DEGREES FAHRENHEIT
FA — FREE AREA
F&T — FLOAT & THERMOSTATIC TRAP
FC — FORWARD CURVED
FCU — FAN COIL UNIT
FD — FLOOR DRAIN
FLA — FULL LOAD AMPS
FLEX — FLEXIBLE
FMD — FLOW MEASURING DEVICE
FPM — FEET PER MINUTE
FPS — FEET PER SECOND
FSD — FIRE/SMOKE DAMPER
G — GAS
GPM — GALLONS PER MINUTE
GT — GENERAL TRADE
H — HUMIDIFIER
HC — HEATING COIL
HD — HUB DRAIN
HDT — HORIZONTAL DRAW THROUGH
HE — HEAT EXCHANGER
HP — HORSEPOWER
HPR — HIGH PRESSURE CONDENSATE RETURN
HPS — HIGH PRESSURE STEAM
HR — HOUR
HRR — HEAT RECLAIM RETURN
HRS — HEAT RECLAIM SUPPLY
HRC — HEAT RECLAIM COIL
HT — HEATING TRADE
HWP — HOT WATER PUMP
HWR — HOT WATER RETURN
HWS — HOT WATER SUPPLY
KW — KILOWATT
LAT — LEAVING AIR TEMPERATURE
LD — LINEAR DIFFUSER
LPR — LOW PRESSURE RETURN (CONDENSATE)
LPS — LOW PRESSURE STEAM
LRA — LOCKED ROTOR AMPS
LWT — LEAVING WATER TEMPERATURE
M — MOTOR OPERATED DAMPER
MA — MIXED AIR
MBH — 1000 BRITISH THERMAL UNITS
M.C. — MECHANICAL CONTRACTOR
MIN — MINIMUM
MSO — 50% MINIMUM SHUT OFF
NIC — NOT IN CONTRACT
NTS — NOT TO SCALE
OA — OUTSIDE AIR
P — PUMP
PC — PUMPED CONDENSATE
PD — PUMP DISCHARGE
PH — PER HOUR
PRESS — PRESSURE
PSI — POUNDS PER SQUARE INCH
PSIG — POUNDS PER SQUARE INCH (GAUGE)
PSIA — POUNDS PER SQUARE INCH (ABSOLUTE)
PT — PLUMBING TRADE
RA — RETURN AIR
RC — REHEAT COIL
RF — RETURN FAN
RG — RETURN GRILLE
RLA — RUNNING LOAD AMPS
RH — RELATIVE HUMIDITY
RPM — REVOLUTIONS PER MINUTE
SA — SUPPLY AIR
SF — SUPPLY FAN
SG — SUPPLY GRILLE
SM — SHEET METAL
SO — 100% SHUT OFF
SR — SUPPLY REGISTER
SS — STAINLESS STEEL
SUH — STEAM UNIT HEATER
T — THERMOSTAT
TA — TRANSFER AIR
TAC — TERMINAL AIR CABINET
TCP — TEMPERATURE CONTROL PANEL
TCT — TEMPERATURE CONTROL TRADE
TCV — TEMPERATURE CONTROL VALVE
TG — TRANSFER GRILLE
TO — TEST OPENING
UH — UNIT HEATER
UNO — UNLESS NOTED OTHERWISE
UV — UNIT VENTILATOR
VA — VANE AXIAL
VDT — VERTICAL DRAW THROUGH
VFD — VARIABLE FREQUENCY DRIVE
VVB — VARIABLE VOLUME BOX
VVBR — VARIABLE VOLUME BOX W/ REHEAT
WB — WET BULB
WF — WALL FIN
WG — WATER GAUGE
WPD — WATER PRESSURE DROP
WTD — WATER TEMPERATURE DROP
C.O.T.R. – CONTRACTING OFFICER

GENERAL DEMOLITION & NEW WORK NOTES (ALL DRAWINGS):

1. THIS CONTRACTOR SHALL VERIFY THE EXISTING CONDITIONS AT THE PROJECT SITE BEFORE SUBMITTING COST PROPOSAL. CONTRACTOR IS ADVISED THAT ALL LOCATIONS ARE APPROXIMATE.

2. AN ATTEMPT HAS BEEN MADE TO SHOW THE APPROXIMATE LOCATION OF ALL STRUCTURE, EQUIPMENT, PIPING, FIXTURES, DUCTWORK, AND OUTLETS. THIS CONTRACTOR SHALL VISIT THE SITE TO VERIFY COMPONENTS, LOCATIONS AND SIZES SHOWN OR NOT SHOWN. ALL COMPONENTS NEED TO BE REMOVED IN THE DEMOLITION AREA UNLESS NOTED ON THE DRAWINGS.

3. SERVICES TO EXISTING BUILDING SHALL BE KEPT ON CONTINUOUS OPERATION INCLUDING DOMESTIC WATER, SANITARY, STORM, STEAM, HEATING, HOT WATER, HVAC SUPPLY, RETURN & EXHAUST, ETC. ANY ABSOLUTELY NECESSARY INTERRUPTION OF THESE SERVICES TO ACCOMPLISH PROJECT CONSTRUCTION SHALL BE ARRANGED WITH THE RESIDENT ENGINEER THROUGH THE GENERAL CONTRACTOR, A MINIMUM OF FOUR (4) WEEKS IN ADVANCE. TEMPORARY SERVICES SHALL BE FURNISHED AND INSTALLED WHERE NECESSARY TO ACCOMPLISH THIS PURPOSE. TEMPORARIES SHALL BE REMOVED ONLY AFTER NEW PERMANENT SERVICES ARE INSTALLED AND FULLY OPERATIONAL.

4. THIS CONTRACTOR SHALL BE RESPONSIBLE FOR DEMOLITION, REMOVAL, CAPPING, STORING, ABANDONING, DISCONNECTING, RELOCATING AND RECONNECTION OF EXISTING EQUIPMENT AND MATERIAL. ALL CUTTING, PATCHING, REPAIRING, REPLACEMENT AND REFINISHING SHALL MATCH THE EXISTING CONSTRUCTION AS NEARLY AS POSSIBLE.

5. EXCEPT WHERE OTHERWISE SHOWN OR NOTED ON DRAWING - "RELOCATED" OR HEREINAFTER NOTED, ALL EXISTING EQUIPMENT AND MATERIAL IN AREAS TO BE REMODELED/ALTERED SHALL BE REMOVED WHERE THEY INTERFERE WITH PROPOSED NEW CONSTRUCTION &/OR INTERFERE W/PROPOSED USAGE OF SPACE BY OWNER AS FOLLOWS:

   (A) REMOVE ANY PIPES PROTRUDING ABOVE FINISHED FLOOR OR THROUGH WALL AND CAP AND FINISH OVER WITH MATERIAL TO MATCH EXISTING.

   (B) REMOVE ALL STEAM, HEATING HOT WATER, HVAC SUPPLY, RETURN & EXHAUST AS NOTED. CAP AT NEAREST ACTIVE MAIN. SUPPLY & RETURN MAINS TO BE VALVED & CAPPED.

   (C) IN REMODELED/ALTERED AREAS ANY PIPING OR DUCTWORK PASSING THROUGH THE REMODELED AREAS TO SERVE (OR BEING SERVED FROM EXISTING ADJACENT, REMOTE, OR SURROUNDING AREA THAT ARE TO REMAIN) SHALL BE RETAINED AND KEPT OPERATIONAL AND SHALL BE REROUTED IN ALL CASES WHERE THEY INTERFERE WITH ANY NEW WORK OR USAGE TO BE ACCOMPLISHED IN THE REMODELED AREA.

   (D) PENETRATIONS THROUGH EXISTING WALLS AND FLOORS FORMERLY OCCUPIED BY REMOVED PIPING SHALL BE PATCHED TO MATCH EXISTING CONSTRUCTION.

6. THESE DRAWINGS ARE NECESSARILY DIAGRAMMATIC IN NATURE. NOT ALL FITTINGS, OFFSETS, VENTS, OR DRAINS ARE SHOWN. THE CONTRACTOR SHALL VISIT THE SITE PRIOR TO BIDDING AND INCLUDE ALL FITTINGS, OFFSETS, VENTS, AND DRAINS AS REQUIRED TO PROVIDE A COMPLETE AND FUNCTIONING SYSTEM.

7. ALL PIPING AND DUCTS IN FINISHED ROOMS OR SPACES SHALL BE CONCEALED IN A FURRED CHASE OR ABOVE THE HARD SUSPENDED CEILING.

8. THE FIRST FIGURE OF DUCT SIZE INDICATES DIMENSION OF FACE SHOWN OR INDICATED. DUCT SIZES ARE NET INSIDE DIMENSIONS.

9. ACCESS IS REQUIRED FOR ALL VALVES, TRAPS, DAMPERS, CLEANOUTS, CONTROLS, ETC.

10. TOTAL STATIC PRESSURE NOTED IN THE SCHEDULES INCLUDES DUCT SYSTEM, TERMINAL UNITS, FILTERS, COILS, ETC.

11. FOR TYPICAL STEAM AND WATER PIPING CONNECTIONS TO EQUIPMENT, SEE STANDARD EQUIPMENT DETAILS.

12. DIFFUSER, REGISTER AND GRILLE SIZES SHOWN ON FLOOR PLANS ARE NECK SIZES.

13. WATER PIPE CONNECTIONS TO AIR HEATING AND COOLING COILS SHALL BE MADE TO PROVIDE COUNTER FLOW BETWEEN WATER AND AIR.

14. ALL HWS & HWR PIPING TO TERMINAL UNITS SHALL BE 3/4", UNLESS OTHERWISE NOTED.

15. PROVIDE MANUAL AIR VENTS ON ALL WATER RISERS & CHANGES IN PIPE ELEVATIONS.

16. PROVIDE ALL LABOR, FITTINGS, INSTALLATION AND PIPING NECESSARY TO INSTALL PIPING. COORDINATE WITH OTHER TRADES.

17. ALL DUCT WORK PENETRATIONS THROUGH FIRE OR SMOKE RATED WALLS MUST MAINTAIN THE RATING OF THE WALL. FIRE DAMPERS ARE REQ'D WHERE DUCTS PENETRATE WALLS HAVING A FIRE RESISTANCE RATING OF 1 HOUR OR 2 HOURS. FIRE DAMPERS USED FOR PROTECTION OF WALLS OR FLOORS W/ FIRE RESISTANCE RATINGS OF LESS THAN 3 HOURS SHALL HAVE A U.L. 1 1/2 HOUR FIRE PROTECTION RATING.

18. ALL ABANDONED PNEUMATIC CONTROL PIPING SHALL BE REMOVED COMPLETELY BACK TO NEAREST ACTIVE MAIN AND CAPPED.

SUGGESTED MECHANICAL WORK PHASING:

NOTE: AHU'S, EXHAUST FANS, STEAM, POWER, LIGHTING, ETC. SHALL BE SCHEDULED WITH RESIDENT ENGINEER AND BUILDING STAFF A MINIMUM OF 4 WEEKS PRIOR TO ANY TEMPORARY SHUTDOWNS. SHUTDOWNS ARE LIMITED TO THE GREATEST EXTENT POSSIBLE (MAX OF 24 HOURS) AND SHALL BE COORDINATED ALSO WITH WEATHER CONDITIONS. NEW EQUIPMENT TO BE DELIVERED TO SITE PRIOR TO SHUTDOWN AND REMOVAL OF EXISTING. STORAGE AND PROTECTION BY CONTRACTOR.

1. SUBMIT PROPOSED SCHEDULE OF WORK, DELIVERY DATES AND SHUT DOWNS FOR REVIEW BY VA AND ALL TRADES. REVISE CHILLED WATER LINES ON ROOF SO PENTHOUSE WALL CONSTRUCTION CAN BEGIN.

2. PENTHOUSE CONSTRUCTION TO BE NEAR COMPLETION AND PREPARED FOR NEW AHU INSTALLATION. ALLOW FOR A TEMPORARY OUTSIDE AIR INTAKE TO SERVE THE EXISTING AHU (AC-120) THAT IS AFFECTING PART OF THE WEST WALL OF THE PENTHOUSE FROM BEING COMPLETED. INSTALL THE THREE (3) EXHAUST FANS WITHIN THE PENTHOUSE PRIOR TO ENCLOSING THE PENTHOUSE. REVISE THE POWER TO THE 3 FANS AFTER NEW UTILITIES ARE INSTALLED AND CONTROLS ARE AVAILABLE. DEPENDING ON THE DURATION AND WEATHER PROVIDE A TEMPORARY DUCT FOR THE EXISTING AHU AND MAINTAIN A WALL OPENING TO THE OUTDOORS.

3. NEW UTILITIES, SUPPORTS, POWER, DUCTWORK, CHILLED WATER, STEAM, CONDENSATE, CONTROL PANELS, CONTROLS, ETC. TO BE INSTALLED WITHIN THE ENCLOSED PENTHOUSE. BEGIN INSTALLING THE HEAT RECLAIM AND EXHAUST SYSTEM IN THE PENTHOUSE.

4. INSTALL THE NEW AHU (AC-120) IN THE PENTHOUSE, MAKE FINAL CONNECTIONS AND PREPARE THE AHU FOR THE FINAL SUPPLY DUCT CONNECTIONS. INSTALL CONTROLS AND SENSORS. BEGIN INSTALLING ROOF MOUNTED DUCTWORK TO HRC-2 AND AC-137.

5. REMOVE THE EXISTING AHU ON THE ROOF AND MAKE THE FINAL SUPPLY DUCT CONNECTION TO THE NEW AHU (AC-120). TEMPORARILY BALANCE SUPPLY AND EXHAUST SYSTEM ON THE NORTH SIDE OF THE BUILDING.

6. COMPLETE THE NEW HEAT RECLAIM DUCTWORK, COIL AND FAN SYSTEM IN THE PENTHOUSE. MAKE FINAL DUCT CONNECTIONS TO THE EXHAUST AT THE MECHANICAL ROOM AND TEMPORARILY BALANCE THE EXHAUST.

7. COMPLETE THE DUCTWORK INDOORS AND OUTDOORS. REMOVE AC-137 AND HRC-2 FROM THE ROOF AND MAKE FINAL DUCT CONNECTIONS. BALANCE SYSTEMS TO FINAL FLOWS AND ADJUST CONTROLS TO FINAL SET POINTS.

8. SEE SPECIFICATION 01 00 00, GENERAL REQUIREMENTS, Para. 1.6 FOR ADDITIONAL PHASING.

9. DURING TEMPORARY SHUTDOWNS, CONTRACTOR TO PROVIDE TEMPORARY COOLING, HEATING OR EXHAUST AIR EQUIPMENT OR DEVISES TO MAINTAIN TEMPERATURES AT 68°F (± 10 DEG) AND PROVIDE MINIMUM 50% OF CURRENT EXHAUST AIR.

FINAL CONSTRUCTION DOCUMENTS

Revisions: Date

CONSULTANTS:

Henneman Engineering Inc.
Madison:
1232 Fourier Drive, Suite 101
Madison, Wisconsin 53717-1960
Email: info@henneman.com
Website: http://www.henneman.com
T 608.833.7000
F 608.833.6996
JOB NO. 11-7256

© 2005 Henneman Engineering Inc. / IL reg. #184-000245 (001-013372) (062-036272)

PROJECT LEADER:

CHEQUAMEGON BAY ENGINEERING, INC.
CBE 2002-2011
ASHLAND, WI
211 6TH STREET WEST
ASHLAND, WI. 54806
PHONE: (715) 682-6004
FAX: (715) 682-6025
MILWAUKEE, WI
1109 N. MAYFAIR RD., SUITE 208
MILWAUKEE, WI. 53226
PHONE: (414) 258-6004
FAX: (414) 258-6154

Drawing Title: MECHANICAL NOTES, SYMBOLS AND ABBREVIATIONS	Project Title: UPGRADE BUILDING 12 HEATING + VENTILATION PROJECT	Project Number: 607-11-101	Office of Facilities Management
Approved: Project Director	Location: Madison, Wisconsin 53705	Building Number: 12	
	Date: February 24, 2012 / Checked By: HEI / Drawn By: HEI	Drawing Number: M001	Department of Veterans Affairs

VA FORM 08-6231, OCT 1978

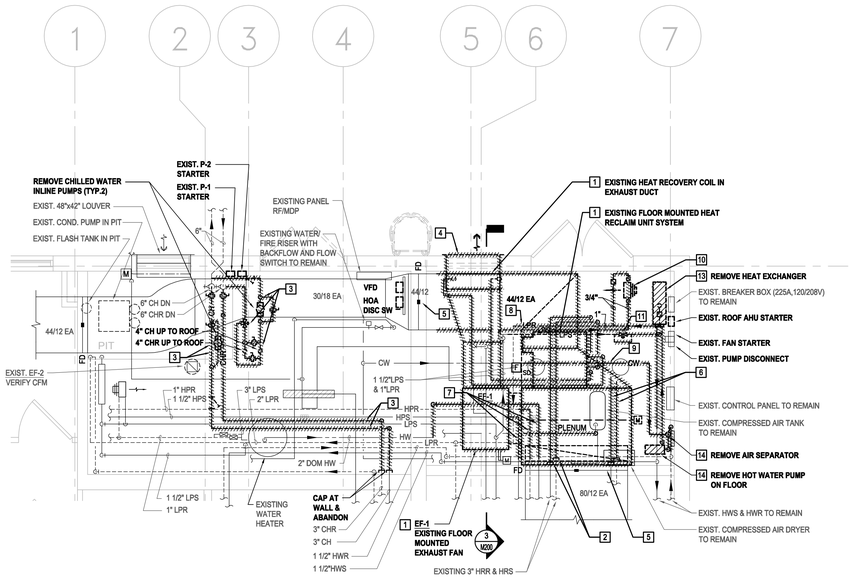

2 1/4" MECHANICAL ROOM PLAN - DEMOLITION

SCALE: 1/4" = 1'-0"

KEYED DEMOLITION NOTES (SHEET MD101):

1. COMPLETELY REMOVE EXHAUST FAN, HEAT RECLAIM PIPING AND PUMP, HEAT RECLAIM COIL AT LOUVER, SUPPORTS, DUCTWORK FROM FAN TO LOUVER AND MODIFY DUCTWORK AT CEILING FOR NEW WORK. TEMPORARILY RELOCATE CONTROL SENSORS IN PIPING AND DUCTWORK AS NECESSARY AND COORDINATE WITH PHASING PRIOR TO REMOVAL TO MINIMIZE SHUT DOWNS.
2. REMOVE AND CAP EXISTING 3" HEAT RECOVERY PIPING AT WALL OF MECHANICAL ROOM.
3. REMOVE EXISTING 4" CHILLED WATER PIPING, PUMP, VALVES, ETC. BACK TO 6" RISERS AT PIT.
4. G.C. TO REMOVE EXISTING 7'-6"x3'-6" EXHAUST LOUVER AND PATCH EXISTING EXTERIOR WALL.
5. TWO (2) EXISTING FIRE DAMPERS TO REMAIN, M.C. TO VERIFY THAT DAMPERS ARE FUNCTIONAL.
6. REMOVE TWO (2) EXISTING 3" ABANDONED PIPES ABOVE DUCTWORK BACK TO MECH. ROOM WALL, CUTOFF AT WALL AND CAP.
7. REMOVE A SECTION & REROUTE EXISTING 1" HPR, 1-1/2" HPS, & 2" DOM. HW TO ALLOW INSTALLATION OF NEW STAIR (VERIFY EXISTING PIPE SIZES).
8. REMOVE A SECTION & REROUTE EXISTING 1" LPR TO ALLOW INSTALLATION & CLEARANCE FOR NEW STAIR (VERIFY EXISTING PIPE SIZE).
9. REMOVE A SECTION & REROUTE EXISTING 1" CW MAKE-UP & 1" COMP. AIR TO ALLOW INSTALLATION OF NEW STAIR(VERIFY EXISTING PIPE SIZES).
10. REMOVE EXISTING STEAM UNIT HEATER FOR RELOCATION. DISCONNECT/REMOVE EXISTING 3/4" LPS & LPR FOR REROUTING. SEE NEW WORK PLAN FOR NEW LOCATION OF UNIT HEATER.
11. EXISTING STEAM CONTROL VALVE & BYPASS PIPING TO BE REMOVED. SEE NEW WORK PLAN FOR NEW LOCATION OF CONTROL VALVE.
12. CUT & CAP PIPING. REMOVE EXISTING PIPING UP THROUGH ROOF.
13. REMOVE EXISTING STEAM-TO-WATER HEAT EXCHANGER AND PIPING FOR REPLACEMENT IN SAME APPROXIMATE LOCATION.
14. REMOVE EXISTING HOT WATER PUMP ON FLOOR, AIR SEPARATOR AND PIPING FOR REPLACEMENT IN SAME APPROXIMATE LOCATION.

EXISTING VENTILATION SCHEDULE

Room No.	Use	Required Air Changes	Pressure	Room Volume	Supply CFM	Exhaust CFM	
1 & 1A	CORRIDOR	4.0	+	2565	315	0	
1B	CORRIDOR	4.0	+	2060	205	0	
1C	CORRIDOR	4.0	-	5692	625	890	
2	FEED & BEDDING STORAGE	4.0	+	681	130	100	
3	ANIMAL HOUSING	15.0	-	610	290	380	
4	SURGICAL/PROCEDURE ROOM	15.0	-	704	430	1100	
5	ANIMAL HOUSING	15.0	-	1534	340	455	
6	SURGICAL/PROCEDURE ROOM	15.0	+	1612	390	210	
7	TOILET, MALE	10.0	-	760	110	0	
8	ANIMAL HOUSING	15.0	+	916	175	0	
9	PROCEDURE ROOM	15.0	-	1706	260	300	
10	SURGICAL/PROCEDURE ROOM	15.0	+	1151	580	780	
11	FLAMMABLE STORAGE	15.0	-	274	0	120	
12/14	TOILET, FEMALE	10.0	-	837	210	0	
13	HOUSEKEEPING CLOSET	10.0	-	180	0	85	
15	ANIMAL HOUSING	15.0	-	461	150	120	*
16	ANIMAL HOUSING	15.0	-	634	100	120	
16A	ANIMAL HOUSING	15.0	-	603	100	110	
16B	ANIMAL HOUSING	15.0	-	618	150	100	*
16C	ANIMAL HOUSING	15.0	-	603	160	140	*
17	AUTOCLAVE/LINEN STORAGE	15.0	+	650	290	240	
18	STORAGE	4.0	+	603	120	100	
19	CORRIDOR	4.0	-	516	130	360	
19A	STORAGE	4.0	+	1808	220	140	
20	RACK/CAGE WASH	15.0	-	3069	1350	1685	
20A	STORAGE	4.0	-	760	150	300	
21	CORRIDOR, CLEAN	4.0	+	1112	150	0	
22	SURGICAL SUITE	15.0	+	1855	1200	450	
22A	SURGICAL SCRUB	4.0	-	180	0	115	
23	ANIMAL HOUSING	15.0	-	1323	255	580	
24	ANIMAL HOUSING	15.0	-	1370	270	160	*
25	CORRIDOR, CLEAN	4.0	-	603	0	0	
25A	QUARANTINE ROOM	15.0	-	752	70	395	
26	ANIMAL HOUSING	15.0	-	877	240	160	*
27	CONFERENCE/BREAK ROOM	10.0	+	783	140	100	
28	OFFICE	8.0	+	775	290	210	
29	ANIMAL HOUSING	15.0	-	1362	280	0	
30	OFFICE	15.0	+	1166	380	0	
31	STORAGE	4.0	-	383	0	0	
34	CAGE STORAGE	4.0	+	783	130	0	
35	CORRIDOR, CLEAN	4.0	+	4080	300	0	
36	CAGE PREP, CAGE STORAGE	4.0	+	2272	930	700	
37	STORAGE	4.0	+	488	100	0	
39	ANIMAL HOUSING	15.0	-	1496	495	460	*
40	ANIMAL HOUSING	15.0	-	1496	405	480	
41	ANIMAL HOUSING	15.0	-	1496	497	470	*
42	ANIMAL HOUSING	15.0	-	1496	485	530	
43	ANIMAL HOUSING	15.0	-	1496	490	530	
44	ANIMAL HOUSING	15.0	-	1496	440	490	
45	VESTIBULE	4.0	+	960	-	-	
46	WALK-IN COOLER	x	x	x	x	x	
47	OFFICE	15.0	+	960	160	0	
48	CORRIDOR, SOILED	15.0	-	5488	410	720	
49	STORAGE	4.0	+	128	-	-	
50	CAGE WASH	15.0	+	1184	390	560	*
51	STORAGE, GENERAL	x	x	128	-	-	
52	CORRIDOR, SOILED	15.0	-	4176	350	690	

NOTES:
1. THE CONTRACTOR SHALL MEET OR EXCEED THE AIR CHANGES AND ROOM PRESSURIZATIONS AS SHOWN ON THE FLOOR PLAN DRAWING DETAILS 1/MD101 & 1/M101. SCHEDULED ROOMS ABOVE WITH " * " HAVE THE INCORRECT AIRFLOW PRESSURE RELATIONSHIPS, CORRECT ROOMS PER FLOOR PLAN CFMS.

2. AIR PRESSURE: 0 = ZERO
- = NEGATIVE
+ = POSITIVE

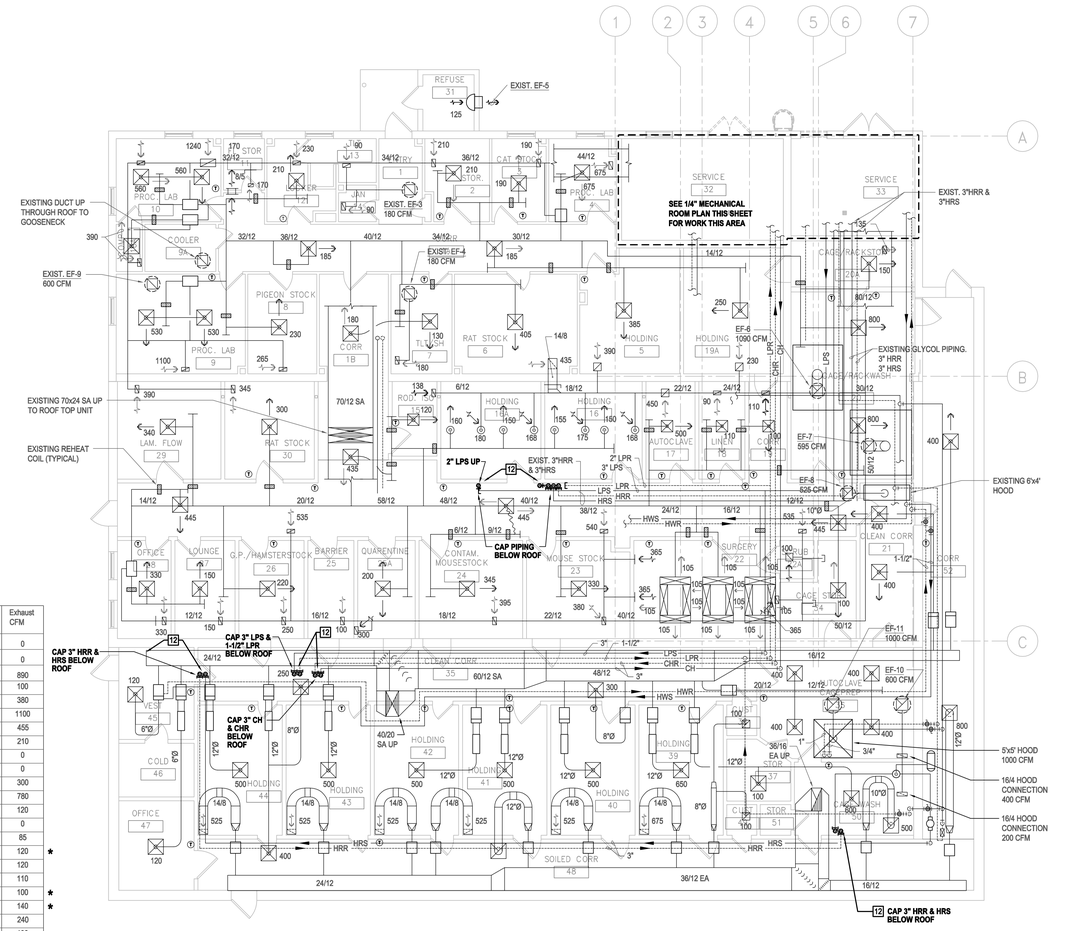

1 MECHANICAL FLOOR PLAN - DEMOLITION

SCALE: 1/8" = 1'-0"

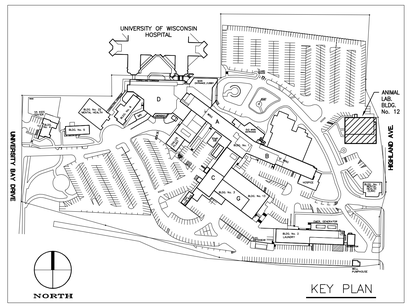

KEY PLAN

FINAL CONSTRUCTION DOCUMENTS

Revisions: Date

CONSULTANTS:

Henneman Engineering Inc.
Madison:
1232 Fourier Drive, Suite 101 T 608.833.7000
Madison, Wisconsin 53717-1960 F 608.833.6996
Email: info@henneman.com
Website: http://www.henneman.com
JOB NO. 11-7256
© 2005 Henneman Engineering Inc. / IL reg. #184-000245 (001-013372) (062-036272)

PROJECT LEADER:

CHEQUAMEGON BAY ENGINEERING, INC.
ONE DEE-SEE
ASHLAND, WI
211 6TH STREET WEST
ASHLAND, WI. 54806
PHONE: (715) 682-6004
FAX: (715) 682-6025
MILWAUKEE, WI
1109 N. MAYFAIR RD., SUITE 208
MILWAUKEE, WI. 53226
PHONE: (414) 258-6004
FAX: (414) 258-6154

Drawing Title	Project Title	Project Number	
MECHANICAL FLOOR PLAN - DEMOLITION	UPGRADE BUILDING 12 HEATING + VENTILATION PROJECT	607-11-101	Office of Facilities Management
Approved: Project Director	Location: Madison, Wisconsin 53705	Building Number: 12	
	Date: February 24, 2012 / Checked By: MJW / Drawn By: JGZ	Drawing Number: MD101	Department of Veterans Affairs

VA FORM 08-6231, OCT 1978

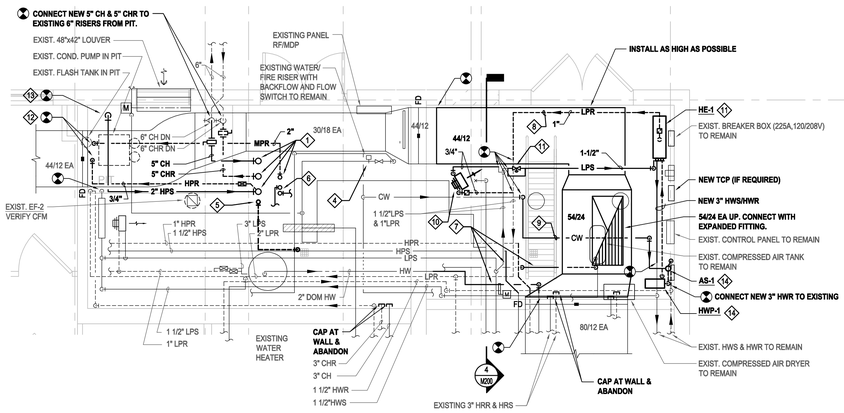

2 1/4" MECHANICAL ROOM PLAN - NEW WORK

SCALE: 1/4" = 1'-0"

12" 0 1' 5' 10'

KEYED NEW WORK NOTES (SHEET M101):

1. NEW 5" CH, 5" CHR, 2" HPS & 2" MPR UP TO PENTHOUSE.
2. MODIFY DUCTWORK AT CEILING FOR NEW PENTHOUSE CONNECTION.
3. MODIFY DUCTWORK AT CEILING FOR NEW ROOF-MOUNTED DUCTWORK CONNECTIONS. PROVIDE ACCESS PANELS IN CEILING IF REQUIRED.
4. MAKE NEW CONNECTION TO EXISTING FIRE MAIN TO SERVE NEW PENTHOUSE ADDITION. USE EXISTING SUPERVISED FLOW CONTROL VALVE AND FLOW SWITCH ON EXISTING FIRE ALARM CONTROL PANEL.
5. 2" DRAIN UP. ROUTE TO FLOOR DRAIN IN EXISTING MECHANICAL ROOM.
6. 3/4" DOMESTIC HOT & COLD WATER UP. CONNECT TO EXISTING PIPING IN MECHANICAL ROOM.
7. REROUTE EXISTING 1" HPR, 1-1/2" HPS, & 2" DOM. HW TO ALLOW INSTALLATION OF NEW STAIR (VERIFY EXISTING PIPE SIZES).
8. REROUTE EXISTING 1" LPR TO ALLOW INSTALLATION & CLEARANCE FOR NEW STAIR (VERIFY EXISTING PIPE SIZE).
9. REROUTE EXISTING 1" CW MAKE-UP & 1" COMPRESSED AIR TO ALLOW INSTALLATION OF NEW STAIR(VERIFY EXISTING PIPE SIZES).
10. RELOCATED STEAM UNIT HEATER. CONNECT 3/4" LPS & LPR (FROM UNIT HEATER) TO EXISTING 1-1/4" LPS & 1" LPR, EXTEND CONTROLS. UNIT HEATER TO BE MOUNTED LOWER THAN NEW 44/12 EXHAUST DUCT. (VERIFY EXISTING PIPE SIZES).
11. NEW HEAT EXCHANGER TO REPLACE EXISTING IN SAME APPROXIMATE LOCATION. STEAM CONTROL VALVE & BYPASS PIPING (SERVING HEAT EXCHANGER) SHALL BE ACCESSIBLE. SEE DETAIL.
12. CONNECT NEW 2 MPR & 3/4" HPR TO EXISTING 2" FLASH TANK INLET PIPE IN PIT, REWORK EXISTING FLASH TANK INLET PIPE AS REQUIRED. SEE PIT PIPING ISOMETRIC 3/M101 FOR CONNECTION LOCATIONS. VERIFY EXACT PIPE ROUTING AND SIZES IN PIT.
13. CONNECT NEW 2" HPS TO 2" HPS EXISTING IN PIT. SEE PIT PIPING ISOMETRIC 3/M101 FOR CONNECTION LOCATION. VERIFY EXACT PIPE ROUTING AND SIZES IN PIT.
14. NEW HOT WATER PUMP (HWP-1), AIR SEPARATOR (AS-1), PIPING, ETC. TO REPLACE EXISTING IN SAME APPROXIMATE LOCATION. SEE DETAILS.

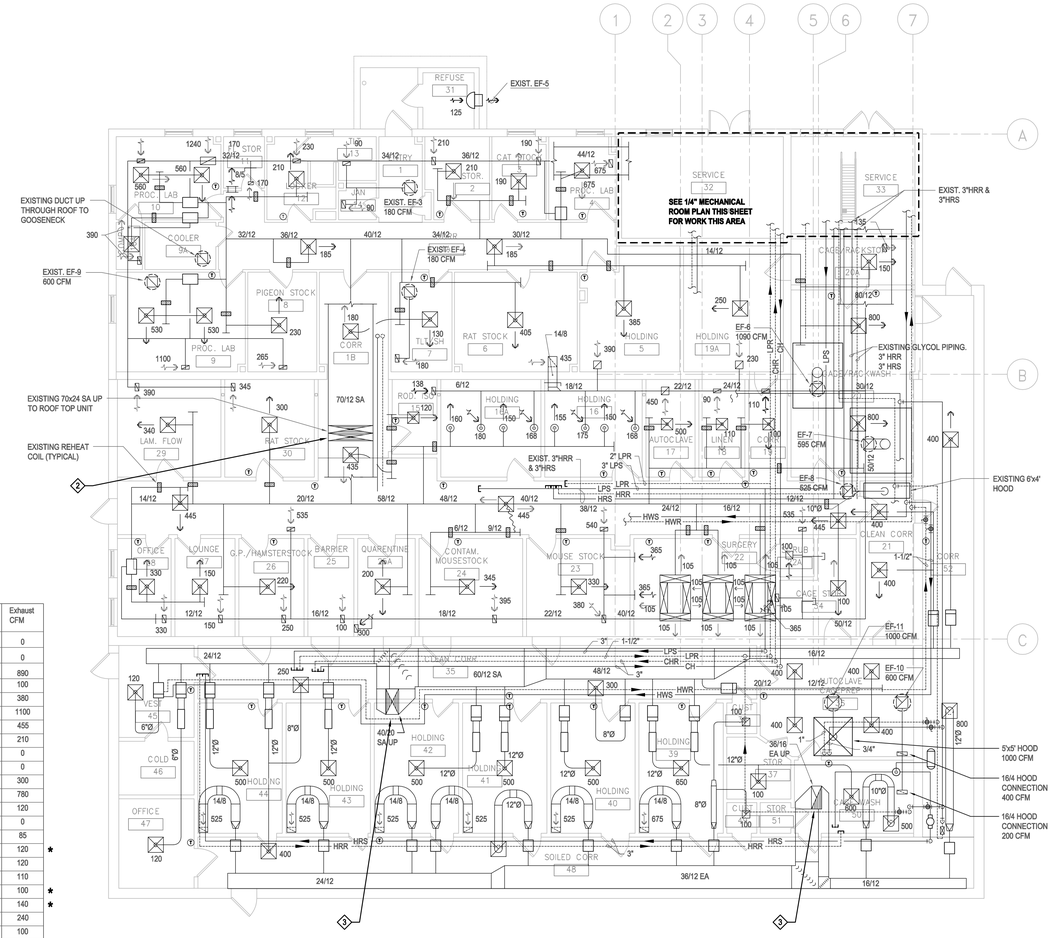

GENERAL NOTES:

1. CONTRACTOR TO REBALANCE ENTIRE BUILDING AFTER NEW AHU IS INSTALLED. THE CONTRACTOR SHALL MEET OR EXCEED THE AIR CHANGES AND ROOM PRESSURIZATIONS AS SHOWN ON THE FLOOR PLAN DRAWING DETAILS 1/MD101 & 1/M101. SEE EXISTING VENTILATION SCHEDULE THIS SHEET.
2. ALL NEW AND EXISTING EQUIPMENT, VALVES, DAMPERS, ETC. SHALL BE ACCESSIBLE FOR MAINTENANCE.

1 MECHANICAL FLOOR PLAN - NEW WORK

SCALE: 1/8" = 1'-0"

12" 0 1' 5' 10' 20'

EXISTING VENTILATION SCHEDULE

Room No.	Use	Required Air Changes	Pressure	Room Volume	Supply CFM	Exhaust CFM	
1 & 1A	CORRIDOR	4.0	+	2565	315	0	
1B	CORRIDOR	4.0	+	2060	205	0	
1C	CORRIDOR	4.0	-	5692	625	890	
2	FEED & BEDDING STORAGE	4.0	+	681	130	100	
3	ANIMAL HOUSING	15.0	-	610	290	380	
4	SURGICAL/PROCEDURE ROOM	15.0	-	704	430	1100	
5	ANIMAL HOUSING	15.0	-	1534	340	455	
6	SURGICAL/PROCEDURE ROOM	15.0	+	1612	390	210	
7	TOILET, MALE	10.0	-	760	110	0	
8	ANIMAL HOUSING	15.0	+	916	175	0	
9	PROCEDURE ROOM	15.0	-	1706	260	300	
10	SURGICAL/PROCEDURE ROOM	15.0	+	1151	580	780	
11	FLAMMABLE STORAGE	15.0	-	274	0	120	
12/14	TOILET, FEMALE	10.0	-	837	210	0	
13	HOUSEKEEPING CLOSET	10.0	-	180	0	85	
15	ANIMAL HOUSING	15.0	-	461	150	120	*
16	ANIMAL HOUSING	15.0	-	634	100	120	
16A	ANIMAL HOUSING	15.0	-	603	100	110	
16B	ANIMAL HOUSING	15.0	-	618	150	100	*
16C	ANIMAL HOUSING	15.0	-	603	160	140	*
17	AUTOCLAVE/LINEN STORAGE	15.0	+	650	290	240	
18	STORAGE	4.0	+	603	120	100	
19	CORRIDOR	4.0	-	516	130	360	
19A	STORAGE	4.0	+	1808	220	140	
20	RACK/CAGE WASH	15.0	-	3069	1350	1685	
20A	STORAGE	4.0	-	760	150	300	
21	CORRIDOR, CLEAN	4.0	+	1112	150	0	
22	SURGICAL SUITE	15.0	+	1855	1200	450	
22A	SURGICAL SCRUB	4.0	-	180	0	115	
23	ANIMAL HOUSING	15.0	-	1323	255	580	
24	ANIMAL HOUSING	15.0	-	1370	270	160	*
25	CORRIDOR, CLEAN	4.0	-	603	0	0	
25A	QUARANTINE ROOM	15.0	-	752	70	395	
26	ANIMAL HOUSING	15.0	-	877	240	160	*
27	CONFERENCE/BREAK ROOM	10.0	+	783	140	100	
28	OFFICE	8.0	+	775	290	210	
29	ANIMAL HOUSING	15.0	-	1362	280	0	
30	OFFICE	15.0	+	1186	380	0	
31	STORAGE	4.0	-	383	0	0	
34	CAGE STORAGE	4.0	+	783	130	0	
35	CORRIDOR, CLEAN	4.0	+	4080	300	0	
36	CAGE PREP, CAGE STORAGE	4.0	+	2272	930	700	
37	STORAGE	4.0	+	488	100	0	
39	ANIMAL HOUSING	15.0	-	1496	495	460	*
40	ANIMAL HOUSING	15.0	-	1496	405	480	
41	ANIMAL HOUSING	15.0	-	1496	497	470	*
42	ANIMAL HOUSING	15.0	-	1496	485	530	
43	ANIMAL HOUSING	15.0	-	1496	490	530	
44	ANIMAL HOUSING	15.0	-	1496	440	490	
45	VESTIBULE	4.0	+	960	-	-	
46	WALK-IN COOLER	x	x	x	x	x	
47	OFFICE	15.0	+	960	160	0	
48	CORRIDOR, SOILED	15.0	-	5488	410	720	
49	STORAGE	4.0	+	128	-	-	
50	CAGE WASH	15.0	+	1184	390	560	*
51	STORAGE, GENERAL	x	x	128	-	-	
52	CORRIDOR, SOILED	15.0	-	4176	350	690	

NOTES:

1. THE CONTRACTOR SHALL MEET OR EXCEED THE AIR CHANGES AND ROOM PRESSURIZATIONS AS SHOWN ON THE FLOOR PLAN DRAWING DETAILS 1/MD101 & 1/M101. SCHEDULED ROOMS ABOVE WITH " * " HAVE THE INCORRECT AIRFLOW PRESSURE RELATIONSHIPS, CORRECT ROOMS PER FLOOR PLAN CFMS.

2. AIR PRESSURE: 0 = ZERO
- = NEGATIVE
+ = POSITIVE

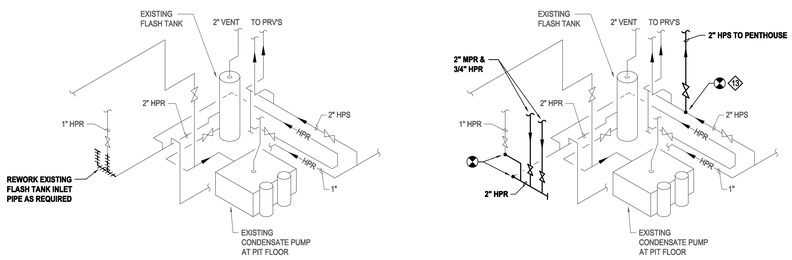

DEMOLITION **NEW WORK**

3 EXISTING PIT STEAM PIPING ISOMETRIC

NO SCALE

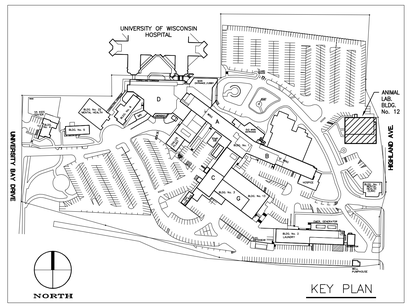

KEY PLAN

FINAL CONSTRUCTION DOCUMENTS

Revisions:	Date

CONSULTANTS:

Henneman Engineering Inc.
Madison:
1232 Fourier Drive, Suite 101 T 608.833.7000
Madison, Wisconsin 53717-1960 F 608.833.6996
Email: info@henneman.com
Website: http://www.henneman.com
JOB NO. 11-7256
© 2005 Henneman Engineering Inc. / IL reg. #184-000245 (001-013372) (062-036272)

PROJECT LEADER:

CHEQUAMEGON BAY ENGINEERING, INC.
CBE 3900 2011
ASHLAND, WI
211 6TH STREET WEST
ASHLAND, WI. 54806
PHONE: (715) 682-6004
FAX: (715) 682-6025
MILWAUKEE, WI
1109 N. MAYFAIR RD., SUITE 208
MILWAUKEE, WI. 53226
PHONE: (414) 258-6004
FAX: (414) 258-6154

Drawing Title: MECHANICAL FLOOR PLAN - NEW WORK	Project Title: UPGRADE BUILDING 12 HEATING + VENTILATION PROJECT	Project Number: 607-11-101	Office of Facilities Management
Approved: Project Director	Location: Madison, Wisconsin 53705	Building Number: 12	
	Date: February 24, 2012 / Checked By: MJW / Drawn By: JGZ	Drawing Number: M101	Department of Veterans Affairs

VA FORM 08-6231, OCT 1978

KEYED DEMOLITION NOTES (SHEET MD102):

1. COMPLETELY REMOVE CHILLED WATER LINES AND SUPPORTS RUNNING ON ROOF. LINES TO REMAIN ACTIVE UNTIL AHU IS READY TO BE REMOVED. ALLOW FOR PIPING TO BE OFFSET FOR NEW CONSTRUCTION OF PENTHOUSE. REFER TO PHASING.
2. STEAM AND HEAT RECLAIM PIPING TO BE REMOVED DOWN TO BELOW ROOF WHEN AHU IS READY TO BE REMOVED. DRAIN PIPING BACK TO MECHANICAL ROOM, REMOVE ALL ABANDONED PIPING WITHIN MECHANICAL ROOMS AND CAP PIPING AT BOTH ENDS.
3. EXHAUST FAN TO BE COMPLETELY REMOVED. MAINTAIN EXHAUST DURING THE NEW PENTHOUSE CONSTRUCTION. EXHAUST WITHIN NEW PENTHOUSE TO BE REVISED PRIOR TO WALLS OF PENTHOUSE BEING INSTALLED.
4. EXISTING PLUMBING VENT TO BE REVISED AND EXTENDED DURING PENTHOUSE CONSTRUCTION. REFER TO NEW WORK.
5. EXISTING ROOF DRAIN TO BE CAPPED AND SEALED WATERTIGHT.
6. EXISTING AHU TO BE REMOVED AFTER NEW AHU AND PENTHOUSE IS INSTALLED. PROVIDE A TEMPORARY AIR INTAKE DUCT (MIN 20' FROM ANY EXHAUST) BEFORE THE PENTHOUSE IS ENCLOSED. REMOVE TEMPORARY DUCT AND AHU AFTER NEW AHU IS PREPARED FOR TIE-IN. REFER TO PHASING.
7. EXISTING HEAT RECLAIM UNIT ON ROOF, PIPING AT CEILING BELOW, PUMP AND EXPANSION TANK TO BE COMPLETELY REMOVED. PIPING FROM HRU-2 TO AC-137 TO BE DRAINED AND CAPPED BELOW ROOF AT EACH END. COORDINATE REMOVAL OF HRU-2 WITH THE REMOVAL OF AC-137, NEW EF-120 AND NEW AC-120. REFER TO PHASING.
8. EXISTING AC-137 ON ROOF, PIPING TO CEILING BELOW (CHILLED, GLYCOL, STEAM) TO BE COMPLETELY REMOVED. PIPING FROM HRU-2 TO AC-137 TO BE DRAINED AND CAPPED BELOW ROOF AT EACH END. COORDINATE REMOVAL OF HRU-2 WITH THE REMOVAL OF AC-137, NEW EF-120 AND NEW AC-120. REFER TO PHASING.

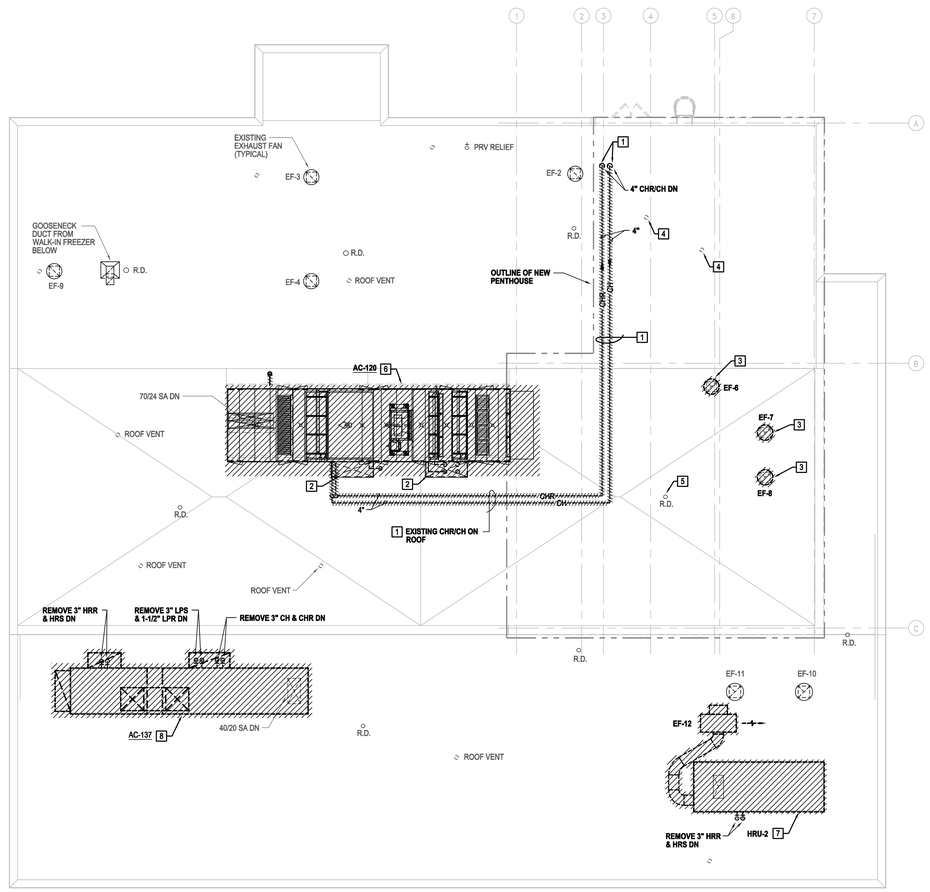

1 MECHANICAL ROOF PLAN - DEMOLITION

SCALE: 1/8" = 1'-0"

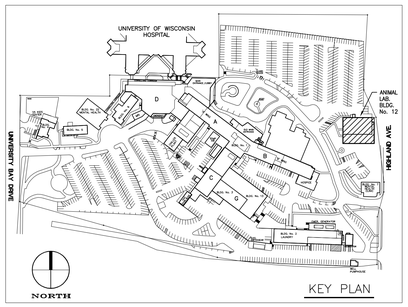

KEY PLAN

FINAL CONSTRUCTION DOCUMENTS

Revisions:	Date

CONSULTANTS:

Henneman Engineering Inc.
Madison:
1232 Fourier Drive, Suite 101 T 608.833.7000
Madison, Wisconsin 53717-1960 F 608.833.6996
Email: info@henneman.com
Website: http://www.henneman.com
JOB NO. 11-7256
© 2005 Henneman Engineering Inc. / IL reg. #184-000245 (001-013372) (062-036272)

PROJECT LEADER:

CHEQUAMEGON BAY ENGINEERING, INC.
CBE 2002-2011

ASHLAND, WI
213 6TH STREET WEST
ASHLAND, WI. 54806
PHONE: (715) 682-6004
FAX: (715) 682-6025

MILWAUKEE, WI
1109 N. MAYFAIR RD., SUITE 208
MILWAUKEE, WI. 53226
PHONE: (414) 258-6004
FAX: (414) 258-6154

Drawing Title	Project Title	Project Number
MECHANICAL ROOF PLAN - DEMOLITION	UPGRADE BUILDING 12 HEATING + VENTILATION PROJECT	607-11-101
Approved: Project Director	Location: Madison, Wisconsin 53705	Building Number: 12
	Date: February 24, 2012 / Checked By: MJW / Drawn By: JGZ	Drawing Number: MD102

Office of Facilities Management

Department of Veterans Affairs

VA FORM 08-6231, OCT 1978

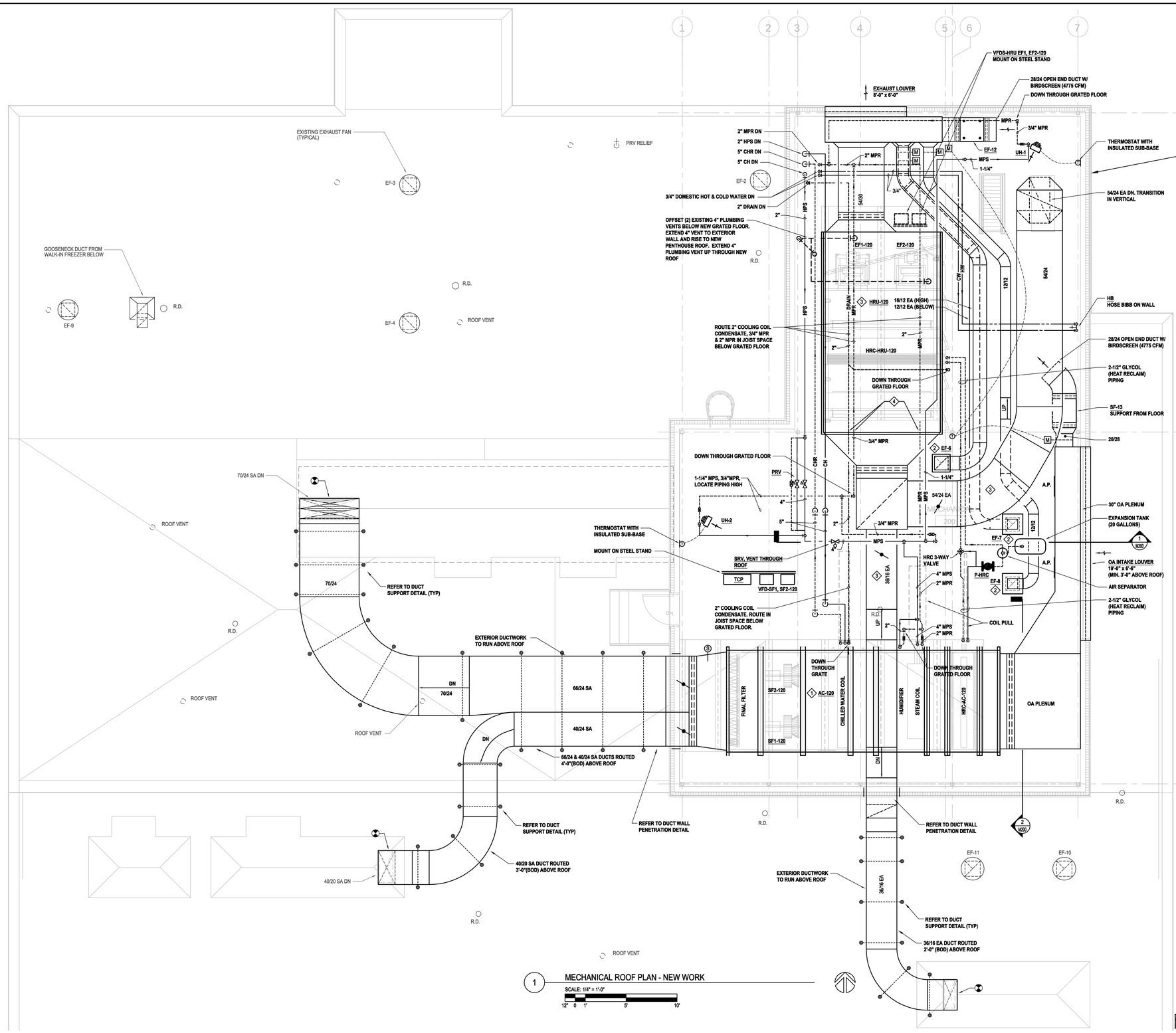

1 MECHANICAL ROOF PLAN - NEW WORK

SCALE: 1/4" = 1'-0"

EXTEND THE EXISTING FIRE SPRINKLER SYSTEM LOCATED AT FLOOR BELOW TO SERVE THE ENTIRE PENTHOUSE. LOCATE HEADS WITH COORDINATION OF OTHER TRADES PRIOR TO INSTALLATION.

KEYED NEW WORK NOTES (SHEET M102):

1. NEW AHU (AC-120) TO BE INSTALLED PRIOR TO DEMOLITION OF EXISTING AC-120. CONNECT ALL UTILITIES AND PREPARE FOR TIE-INS OF DUCTWORK. REFER TO PHASING.
2. NEW EXHAUST FANS EF-6, EF-7 & EF-8 (IN VERTICAL) AND ASSOCIATED DUCTWORK TO BE INSTALLED PRIOR TO DEMOLITION OF EXISTING FANS TO LIMIT SHUT DOWN TIME. EXHAUST TO BE REVISED DIRECTLY OUTDOORS PRIOR TO THE ENCLOSURE OF PENTHOUSE BEING SUBSTANTIALLY COMPLETED.
3. INSTALL NEW EXHAUST FAN, DUCTWORK AND HEAT RECLAIM SYSTEM PRIOR TO REMOVAL OF EXISTING EXHAUST FAN AND HEAT RECLAIM SYSTEM IN MECHANICAL ROOM. MAKE FINAL DUCTWORK MODIFICATIONS AT MECHANICAL ROOM BELOW. REFER TO PHASING.
4. ROUTE 2" COOLING COIL CONDENSATE, 3/4" MPR & 2" MPR THROUGH HOLE IN BEAM (AT GRID B) BELOW GRATED FLOOR.

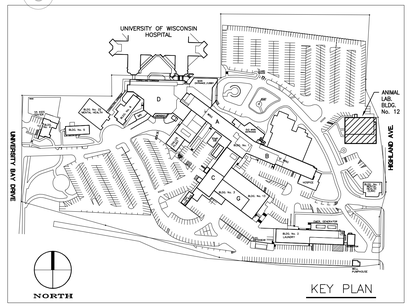

KEY PLAN

FINAL CONSTRUCTION DOCUMENTS

Revisions:	Date

CONSULTANTS:

Henneman Engineering Inc.
Madison:
1232 Fourier Drive, Suite 101
Madison, Wisconsin 53717-1960
Email: info@henneman.com
Website: http://www.henneman.com
T 608.833.7000
F 608.833.6996
JOB NO. 11-7256
© 2005 Henneman Engineering Inc. / IL reg. #184-000245 (001-013372) (062-036272)

PROJECT LEADER:

CHEQUAMEGON BAY ENGINEERING, INC.
CBE 3900-3011

ASHLAND, WI
211 6TH STREET WEST
ASHLAND, WI. 54806
PHONE: (715) 682-6004
FAX: (715) 682-6025

MILWAUKEE, WI
1109 N. MAYFAIR RD.,
SUITE 208
MILWAUKEE, WI. 53226
PHONE: (414) 258-6004
FAX: (414) 258-6154

Drawing Title: MECHANICAL ROOF PLAN - NEW WORK	Project Title: UPGRADE BUILDING 12 HEATING + VENTILATION PROJECT		Project Number: 607-11-101
Approved: Project Director	Location: Madison, Wisconsin 53705		Building Number: 12
	Date: February 24, 2012	Checked By: MJW / Drawn By: JGZ	Drawing Number: M102

Office of Facilities Management

Department of Veterans Affairs

VA FORM 08-6231, OCT 1978

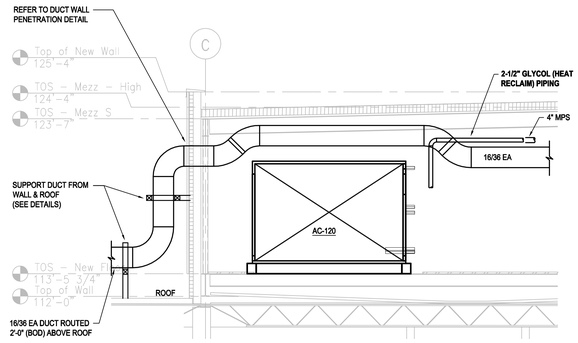

2 PENTHOUSE SECTION (LOOKING WEST)

SCALE: 1/4" = 1'-0"

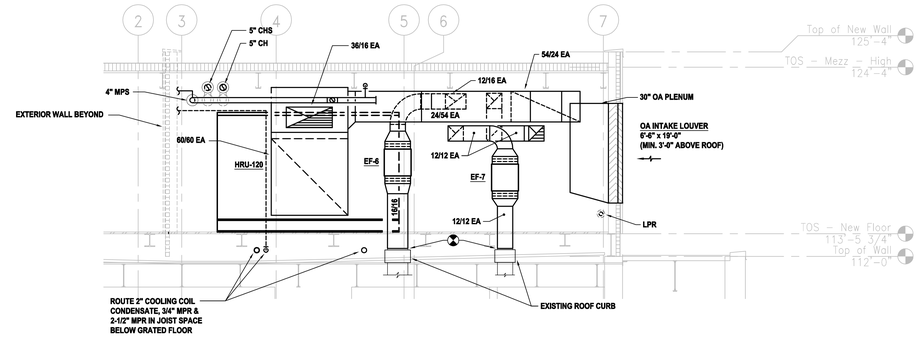

1 PENTHOUSE SECTION (LOOKING NORTH)

SCALE: 1/4" = 1'-0"

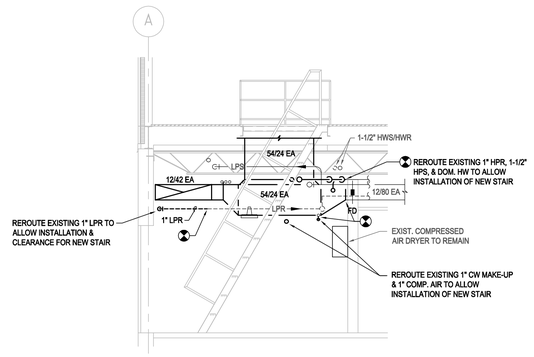

4 FIRST FLOOR MECHANICAL ROOM SECTION (AT NEW STAIR) - NEW WORK

SCALE: 1/4" = 1'-0"

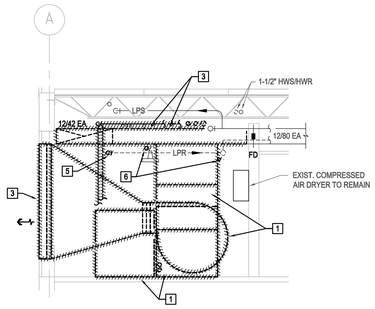

3 FIRST FLOOR MECHANICAL ROOM SECTION - DEMOLITION

SCALE: 1/4" = 1'-0"

KEYED DEMOLITION NOTES (SHEET M200):

1. COMPLETELY REMOVE EXHAUST FAN, HEAT RECLAIM PIPING AND PUMP, HEAT RECLAIM COIL AT LOUVER, SUPPORTS, DUCTWORK FROM FAN TO LOUVER AND MODIFY DUCTWORK AT CEILING FOR NEW WORK. TEMPORARILY RELOCATE CONTROL SENSORS IN PIPING AND DUCTWORK AS NECESSARY AND COORDINATE WITH PHASING PRIOR TO REMOVAL TO MINIMIZE SHUT DOWNS.
2. REMOVE AND CAP EXISTING 3" HEAT RECOVERY PIPING AT WALL OF MECHANICAL ROOM.
3. G.C. TO REMOVE EXISTING 7'-6"x3'-6" EXHAUST LOUVER AND PATCH EXISTING EXTERIOR WALL.
4. REMOVE A SECTION & REROUTE EXISTING 1" HPR, 1-1/2" HPS, & DOM. HW TO ALLOW INSTALLATION OF NEW STAIR (VERIFY EXISTING PIPE SIZES).
5. REMOVE A SECTION & REROUTE EXISTING 1" LPR TO ALLOW INSTALLATION & CLEARANCE FOR NEW STAIR (VERIFY EXISTING PIPE SIZE).
6. REMOVE A SECTION & REROUTE EXISTING 1" CW MAKE-UP & 1" COMPRESSED AIR TO ALLOW INSTALLATION OF NEW STAIR(VERIFY EXISTING PIPE SIZES).

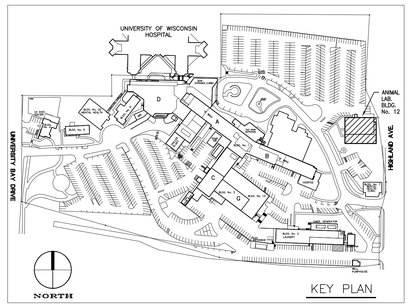

FINAL CONSTRUCTION DOCUMENTS

Revisions:	Date

CONSULTANTS:

Henneman Engineering Inc.
Madison:
1232 Fourier Drive, Suite 101
Madison, Wisconsin 53717-1960
T 608.833.7000
F 608.833.6996
Email: info@henneman.com
Website: http://www.henneman.com
JOB NO. 11-7256
© 2005 Henneman Engineering Inc. / IL reg. #184-000245 (001-013372) (062-036272)

PROJECT LEADER:

CHEQUAMEGON BAY ENGINEERING, INC.
CBE 3900 2011
ASHLAND, WI
211 6TH STREET WEST
ASHLAND, WI. 54806
PHONE: (715) 682-6004
FAX: (715) 682-6025
MILWAUKEE, WI
1109 N. MAYFAIR RD., SUITE 208
MILWAUKEE, WI. 53226
PHONE: (414) 258-6004
FAX: (414) 258-6154

Drawing Title	HVAC SECTIONS
Approved: Project Director	
Project Title	UPGRADE BUILDING 12 HEATING + VENTILATION PROJECT
Location	Madison, Wisconsin 53705
Date	February 24, 2012
Checked By:	MJW
Drawn By:	JGZ
Project Number	607-11-101
Building Number	12
Drawing Number	M200

Office of Facilities Management

Department of Veterans Affairs

VA FORM 08-6231, OCT 1978

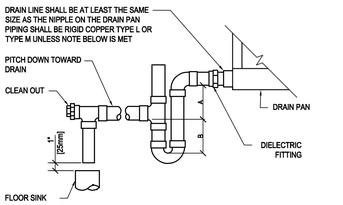

NOTE: 1. CPVC PIPE MAY BE USED ONLY IF APPROVED BY LOCAL VA AND IS INDOORS AND DOES NOT PASS THROUGH RATED BARRIERS.
2. DIELECTRIC FITTING TO BE USED WHEN TWO DISSIMILAR METALS ARE TO BE CONNECTED.

UNIT TYPE	A	B
DRAW THRU	2" [50mm] PLUS X	X
BLOW THRU	1" [25mm] MINIMUM	2X

WHERE X = STATIC PRESSURE IN PAN

10 AIR HANDLING UNIT DRAIN TRAP DETAIL

NO SCALE

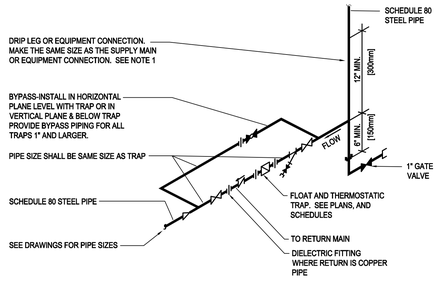

NOTE:

1. ALL DRIP POINTS ON STEAM MAINS SHALL BE PROVIDED WITH A 12" MINIMUM HIGH DRIP LEG FROM BOTTOM OF STEAM MAIN TO TRAP INLET. DRIP LEG SHALL HAVE 6" SCALE POCKET BELOW TRAP INLET.

7 FLOAT AND THERMOSTATIC STEAM TRAP ASSEMBLY

NO SCALE

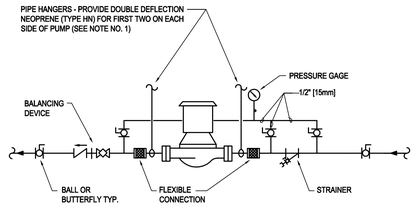

NOTES:

1. SUPPORT PUMP FROM PIPING ONLY. DO NOT SUPPORT PUMP FROM MOTOR.

4 IN-LINE PUMP - CONNECTION

NO SCALE

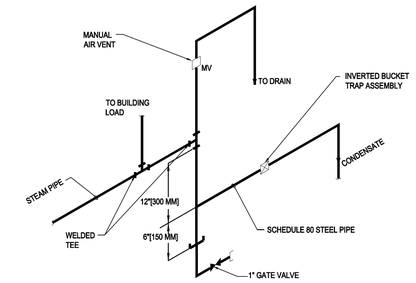

1 END OF STEAM LINE DRIP TRAP

NO SCALE

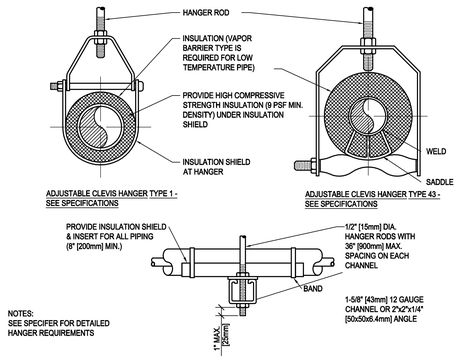

MAXIMUM PIPE/TUBING SUPPORT SPACING

NOM. SIZE	IN. [mm]	THRU 3/4 THRU [20]	1 [25]	1 1/4 [32]	1 1/2 [40]	2 [50]	2 1/2 [65]	3 [75]	4 [100]	5 [125]	6 [150]	8 [200]	10 [250]	12 [300]	14 [350]	16 [400]	18 [450]	20 [500]	24 [600]
PIPE	FT. [mm]	7 [2100]	7 [2100]	7 [2100]	9 [2700]	10 [3000]	11 [3400]	12 [3700]	14 [4100]	16 [4900]	17 [5200]	19 [5800]	22 [6700]	23 [7000]	25 [7600]	27 [8200]	28 [8500]	30 [9100]	32 [9600]
TUBING	FT. [mm]	5 FT [1500]	6 [1800]	7 [2100]	8 [2400]	8 [2400]	9 [2700]	10 [3000]	12 [3700]	13 [4000]	14 [4100]	16 [4900]	- -	- -	- -	- -	- -	- -	- -

NOTE: FOR TRAPEZE HANGER TAKE SPACING OF SMALLEST SIZE ON TRAPEZE.

11 PIPE HANGERS

NO SCALE

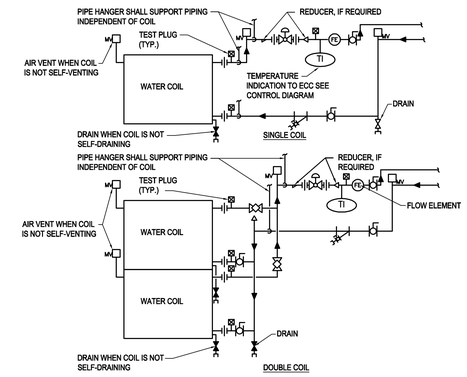

NOTE:

1. WHEN COIL IS INCLUDED IN CASING MOUNTED ON VIBRATION ISOLATORS THE FIRST 2 HANGERS FOR EACH PIPE SHALL BE SPRING & NEOPRENE TYPE. TYPE "H" FOR 4" [100mm]Ø PIPE & SMALLER. TYPE "H-P" FOR 5" [125mm]Ø PIPE & LARGER.
2. PIPING SHALL BE INSTALLED IN SUCH MANNER THAT IT WILL NOT BLOCK THE SWING OR USE OF ACCESS DOORS OR PANELS; NEITHER SHALL IT BLOCK THE SERVICING OF FILTERS, VALES, OR EQUIPMENT.
3. THE FLOW ELEMENT MAY BE INSTALLED IN THE SUPPLY PIPING IF THE REQUIRED MINIMUM UPSTREAM AND DOWNSTREAM DIMENSIONS CANNOT BE OBTAINED IN THE RETURN PIPING.

5 WATER COILS - PIPING CONNECTIONS

NO SCALE

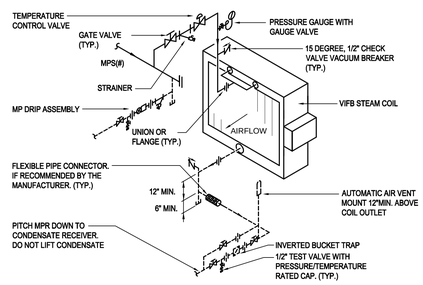

2 VERTICAL INTEGRAL FACE & BYPASS COIL DETAIL

NO SCALE (STEAM PRESSURE > 15 PSIG)

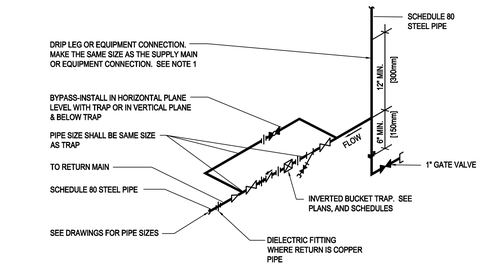

NOTE:

1. ALL DRIP POINTS ON STEAM MAINS SHALL BE PROVIDED WITH A 12" MINIMUM HIGH DRIP LEG FROM BOTTOM OF STEAM MAIN TO TRAP INLET. DRIP LEG SHALL HAVE 6" SCALE POCKET BELOW TRAP INLET.
2. PROVIDE BYPASS PIPING.

8 INVERTED BUCKET STEAM TRAP ASSEMBLY

NO SCALE

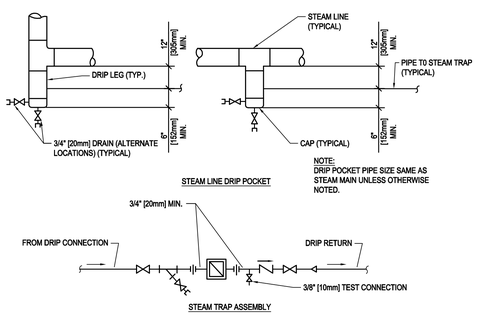

9 STEAM LINE DRIP POCKET, STEAM TRAP ASSEMBLY

NO SCALE

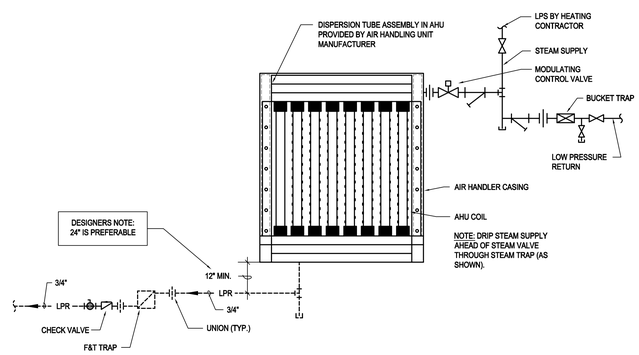

6 HUMIDIFIER PIPING DISPERSION TUBE ASSEMBLY DETAIL

NO SCALE

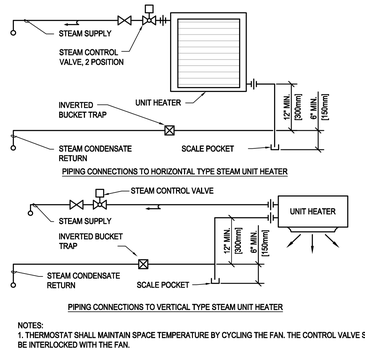

NOTES:
1. THERMOSTAT SHALL MAINTAIN SPACE TEMPERATURE BY CYCLING THE FAN. THE CONTROL VALVE SHALL BE INTERLOCKED WITH THE FAN.

3 STEAM UNIT HEATER PIPING DETAIL

NO SCALE

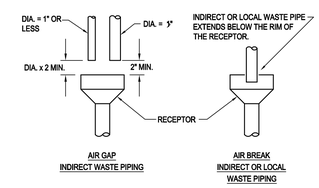

12 AIR BREAK/AIR GAP DETAILS

NO SCALE

FINAL CONSTRUCTION DOCUMENTS

Revisions: Date

CONSULTANTS:

Henneman Engineering Inc.
Madison:
1232 Fourier Drive, Suite 101 T 608.833.7000
Madison, Wisconsin 53717-1960 F 608.833.6996
Email: info@henneman.com
Website: http://www.henneman.com
JOB NO. 11-7256
© 2006 Henneman Engineering Inc. / I.S. reg. #:S4-000245 (001-013372) (062-036272)

PROJECT LEADER:

CHEQUAMEGON BAY ENGINEERING, INC.
CBE 2002-2011
ASHLAND, WI
211 6TH STREET WEST
ASHLAND, WI. 54806
PHONE: (715) 682-6004
FAX: (715) 682-6025
MILWAUKEE, WI
1109 N. MAYFAIR RD., SUITE 208
MILWAUKEE, WI. 53226
PHONE: (414) 258-6004
FAX: (414) 258-6154

Drawing Title	HVAC DETAILS
Approved: Project Director	
Project Title	UPGRADE BUILDING 12 HEATING + VENTILATION PROJECT
Project Number	607-11-101
Building Number	12
Location	Madison, Wisconsin 53705
Date	February 24, 2012
Checked By:	MJW
Drawn By:	JGZ
Drawing Number	M300

Office of Facilities Management
Department of Veterans Affairs

VA FORM 08-6231, OCT 1978

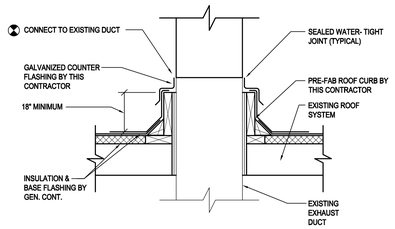

5 DUCT THROUGH ROOF

NO SCALE

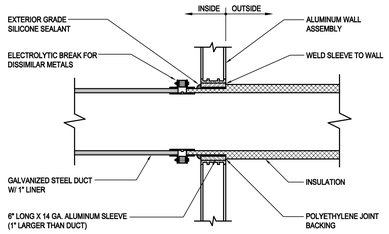

6 DUCT THROUGH ALUMINUM WALL

NO SCALE

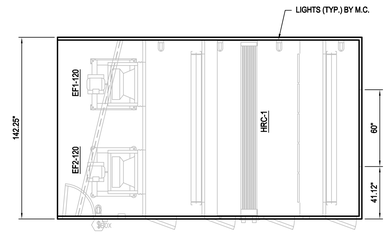

PLAN VIEW

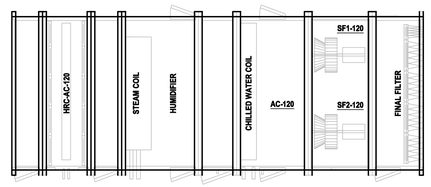

PLAN VIEW

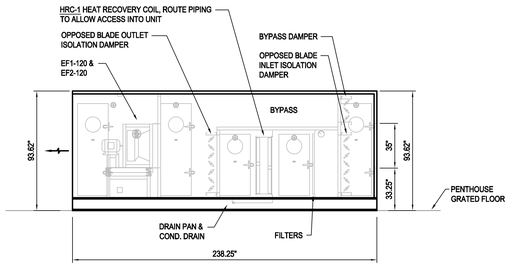

ELEVATION

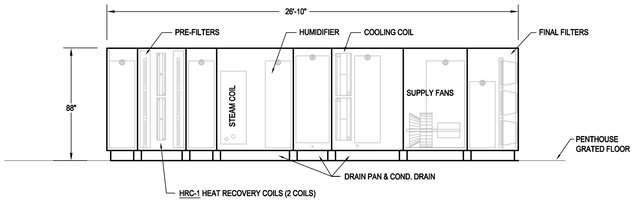

ELEVATION

2 HRU-120 DETAIL (BUILDING 12)

NO SCALE

1 AC-120 DETAIL (BUILDING 12)

NO SCALE

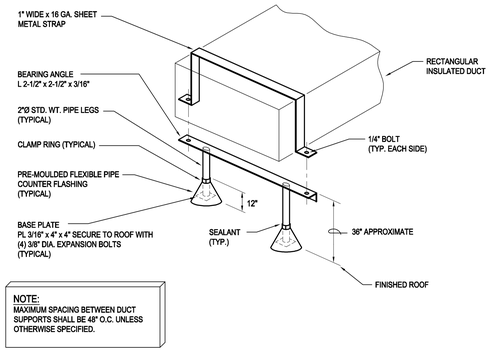

7 DUCT SUPPORT ON ROOF DETAIL

NO SCALE

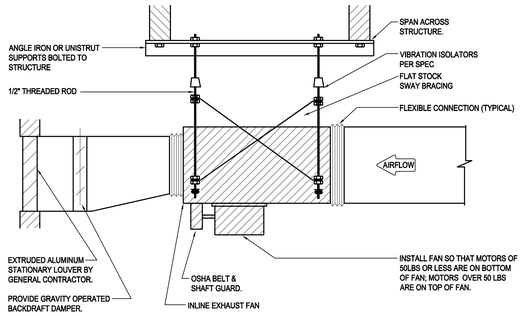

4 INLINE EXHAUST FAN DETAIL - SUSPENDED

NO SCALE

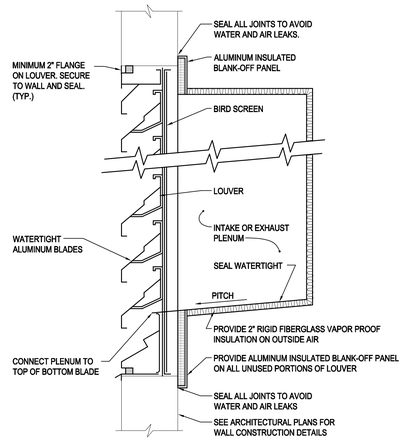

3 LOUVER DETAIL

NO SCALE

FINAL CONSTRUCTION DOCUMENTS

Revisions:	Date

CONSULTANTS:

Henneman Engineering Inc.
Madison:
1232 Fourier Drive, Suite 101 T 608.833.7000
Madison, Wisconsin 53717-1960 F 608.833.6996
Email: info@henneman.com
Website: http://www.henneman.com
JOB NO. 11-7256
© 2005 Henneman Engineering Inc. / IL reg. #184-000245 (001-013372) (062-036272)

PROJECT LEADER:

CHEQUAMEGON BAY ENGINEERING, INC.
CBE 3052-2013
ASHLAND, WI
211 6TH STREET WEST
ASHLAND, WI. 54806
PHONE: (715) 682-6004
FAX: (715) 682-6025
MILWAUKEE, WI
1109 N. MAYFAIR RD., SUITE 208
MILWAUKEE, WI. 53226
PHONE: (414) 258-6004
FAX: (414) 258-6154

Drawing Title	HVAC DETAILS
Approved: Project Director	
Project Title	UPGRADE BUILDING 12 HEATING + VENTILATION PROJECT
Project Number	607-11-101
Building Number	12
Location	Madison, Wisconsin 53705
Date	February 24, 2012
Checked By:	MJW
Drawn By:	JGZ
Drawing Number	M301

Office of Facilities Management

Department of Veterans Affairs

VA FORM 08-6231, OCT 1978

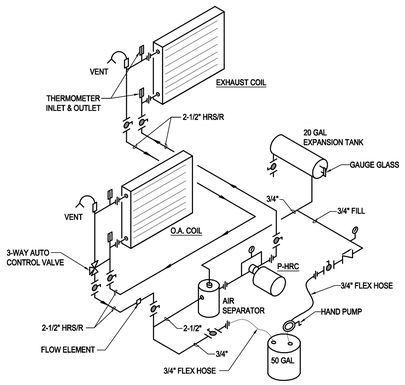

10 GLYCOL HEAT RECOVERY PIPING DETAIL

NO SCALE

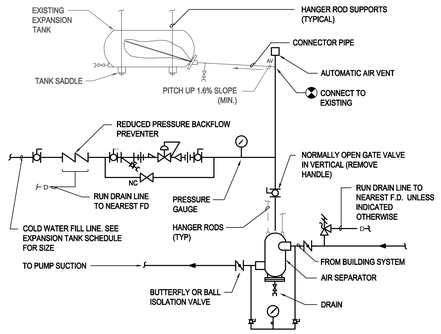

NOTES

1. SEE EXPANSION TANK SYSTEM SCHEDULE FOR COMPONENT SIZES.
2. RELIEF VALVE FOR CHILLED WATER SYSTEM IS SHOWN. OMIT WHEN RELIEF VALVE IS SHOWN ON HEAT EXCHANGER DETAIL & SYSTEM IS USED ONLY FOR HOT WATER HEATING.
3. PROVIDE STRAINER IN AIR SEPARATOR WHEN INDICATED IN EXPANSION TANK SCHEDULE.
4. SET PRESSURE REDUCING VALVE SO PRESSURE AT HIGHEST POINT IN SYSTEM HAS A MINIMUM OF 4 PSIG. [28kPa]

7 HORIZONTAL EXPANSION TANK - PIPING CONNECTIONS DETAIL

NO SCALE

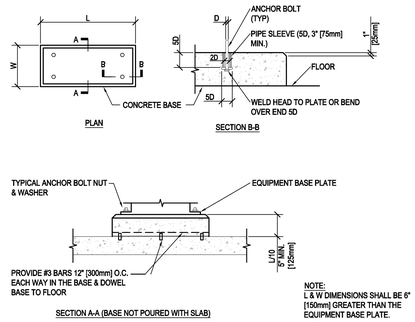

4 CONCRETE BASE DETAIL

NO SCALE

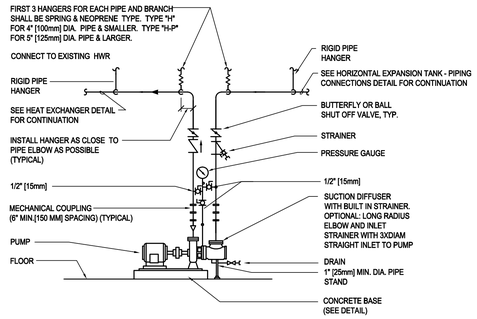

NOTES:
SEE SPECIFICATION SECTION "PUMPS" FOR Y STRAINER OPTION

1 BASE MOUNTED PUMP DETAIL

NO SCALE

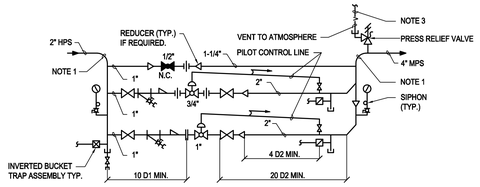

NOTE:

1. CONFIRM SIZING WITH MANUFACTURER. MAX dBa OF 70.
2. INSTALL VALVES AS RECOMMENDED BY MANUFACTURER.
3. PROVIDE NECESSARY UNIONS FOR THE REMOVAL OF VALVE WITH SCREWED CONNECTIONS.

11 STEAM PRESSURE REDUCING STATION DOUBLE VALVE (1/3 & 2/3)

NO SCALE

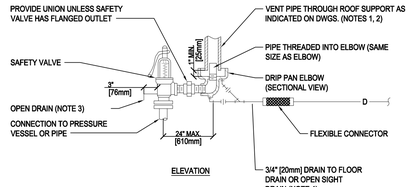

NOTES:

1. UNLESS OTHERWISE SHOWN ON THE DRAWINGS, SIZE THE VENT PIPE SO THAT STEAM IS NOT BLOWN OUT AT THE VENT PIPE ENTRANCE. UTILIZE THE CALCULATION METHOD CONTAINED IN ANSI B31.1. POWER PIPING CODE, APPENDIX II.
2. VENT PIPE SHALL TERMINATE 6' [1829mm] MIN. ABOVE FINISHED ROOF.
3. DISCHARGE OF DRAIN MUST BE DIRECTED AWAY FROM PLATFORMS OR OTHER AREAS WHICH PERSONNEL MAY OCCUPY.
4. DO NOT CONNECT ANY OTHER DRAIN TO THE DRIP PAN ELBOW DRAIN PIPE.

8 STEAM SAFETY VALVE

NO SCALE

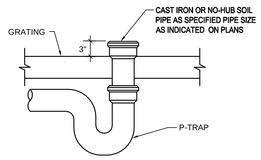

5 HUB DRAIN DETAIL - D

NO SCALE

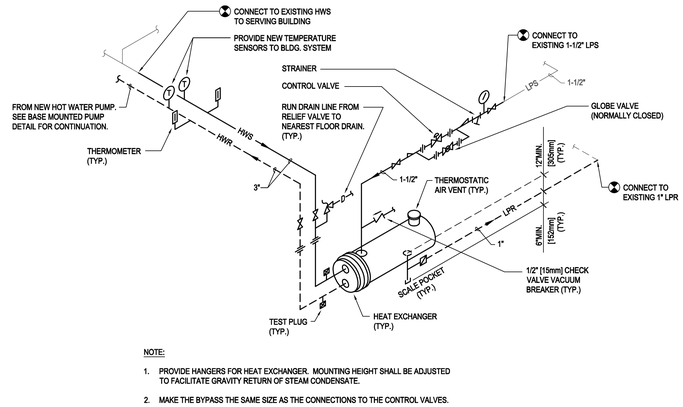

NOTE:

1. PROVIDE HANGERS FOR HEAT EXCHANGER. MOUNTING HEIGHT SHALL BE ADJUSTED TO FACILITATE GRAVITY RETURN OF STEAM CONDENSATE.
2. MAKE THE BYPASS THE SAME SIZE AS THE CONNECTIONS TO THE CONTROL VALVES.

2 HEAT EXCHANGER DETAIL

NO SCALE

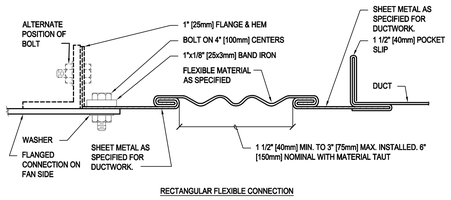

9 FLEXIBLE DUCT CONNECTIONS

NO SCALE

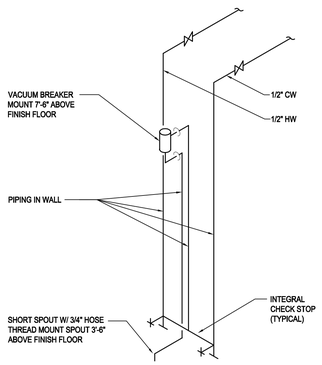

6 HOSE BIBB DETAIL

NO SCALE

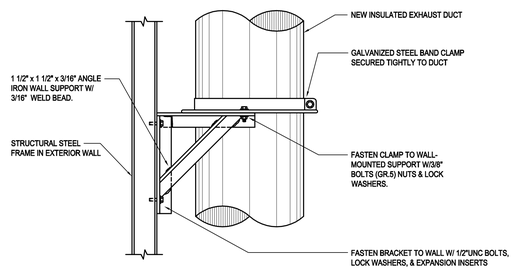

3 EXTERIOR DUCT RISER SUPPORT DETAIL

NO SCALE

FINAL CONSTRUCTION DOCUMENTS

Revisions:	Date

CONSULTANTS:

Henneman Engineering Inc.
Madison:
1232 Fourier Drive, Suite 101 T 608.833.7000
Madison, Wisconsin 53717-1960 F 608.833.6996
Email: info@henneman.com
Website: http://www.henneman.com
JOB NO. 11-7256
© 2005 Henneman Engineering Inc. / IL reg. #184-000245 (001-033372) (062-036272)

PROJECT LEADER:

CHEQUAMEGON BAY ENGINEERING, INC.
ONE 2002-2003

ASHLAND, WI
211 6TH STREET WEST
ASHLAND, WI. 54806
PHONE: (715) 682-6004
FAX: (715) 682-6025

MILWAUKEE, WI
1109 N. MAYFAIR RD., SUITE 208
MILWAUKEE, WI. 53226
PHONE: (414) 258-6004
FAX: (414) 258-6154

Drawing Title	Project Title	Project Number	
HVAC DETAILS	UPGRADE BUILDING 12 HEATING + VENTILATION PROJECT	607-11-101	Office of Facilities Management
Approved: Project Director	Location: Madison, Wisconsin 53705	Building Number: 12	
	Date: February 24, 2012 / Checked By: MJW / Drawn By: JGZ	Drawing Number: M302	Department of Veterans Affairs

VA FORM 08-6231, OCT 1978

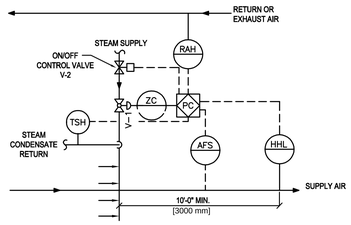

STEAM HUMIDIFIER
RETURN (OR EXHAUST) AIR HUMIDITY SHALL BE MONITORED. ON A CALL FOR HUMIDIFICATION, HUMIDIFIER VALVE V-1 SHALL MODULATE TO MAINTAIN THE RETURN (OR EXHAUST) AIR HUMIDITY SET POINT TO 35% (ADJUSTABLE). PRIOR TO ACTIVATION OF V-1, THE ON/OFF CONTROL VALVE V-2 SHALL BE ENABLED THROUGH ECC AND JACKET TEMPERATURE (ON JACKET STYLE SYSTEM) SENSED BY TSH SHALL BE WARM ENOUGH TO PREVENT CONDENSATION. THE HIGH LIMIT HUMIDITY SENSOR, LOCATED IN THE SUPPLY AIR DUCT 10 FEET AWAY FROM THE HUMIDIFIER SHALL DISABLE THE HUMIDIFIER AND GIVE AN ALARM SIGNAL TO THE ECC, IF THE SUPPLY AIR HUMIDITY EXCEEDS 90% RH (ADJUSTABLE). THE AIRFLOW SWITCH SHALL PROVE AIRFLOW BEFORE HUMIDITY CONTROLS ARE ACTIVATED.

3 STEAM HUMIDIFIER CONTROLS

NO SCALE

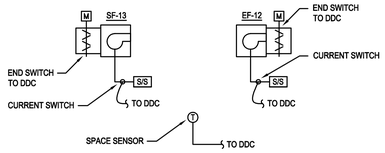

MECHANICAL ROOM VENTILATION:
ON A RISE IN SPACE TEMPERATURE ABOVE ADJUSTABLE SET POINT (80F), DDC SYSTEM SHALL OPEN EF-12 AND SF-13 DAMPERS. ON INDICATION FROM DAMPER END SWITCHES THAT BOTH DAMPERS ARE OPEN, EF-12 AND SF-13 SHALL RUN, MINIMUM RUN TIME OF 5 MINUTES (ADJ). WHEN SPACE TEMPERATURE RETURNS TO SET POINT BOTH FANS SHALL SHUT DOWN AND DAMPERS SHALL CLOSE.

ON FAILURE OF ONE OF THE FANS TO RUN, BOTH FANS SHALL BE SHUT DOWN, DAMPERS SHALL CLOSE, AND AN ALARM SHALL BE ISSUED THROUGH THE DDC SYSTEM.

4 MECHANICAL ROOM VENTILATION

NO SCALE

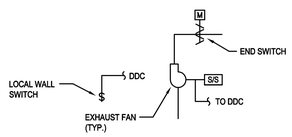

EXHAUST FANS (EF-6, 7, 8):
ON CALL FOR THE FAN TO START FROM LOCAL WALL SWITCH, DDC SYSTEM SHALL OPEN DAMPER. ON INDICATION FROM DAMPER END SWITCH THAT THE DAMPER IS OPEN, FAN SHALL RUN. WHEN LOCAL WALL SWITCH IS TURNED OFF, FAN SHALL SHUT DOWN AND DAMPER SHALL CLOSE.

ON FAILURE OF THE FAN TO RUN, DAMPERS SHALL CLOSE, AND AN ALARM SHALL BE ISSUED THROUGH THE DDC SYSTEM.

5 EXHAUST FANS (EF-6, 7, 8)

NO SCALE

CONTROLS NOTE:
EXISTING CONTROLS HAVE PNEUMATIC REHEAT COILS (TYPICALLY ON THE NORTH SIDE OF THE BUILDING), METASYS CONTROLS ON THE VAV/CV BOXES AND PRESSURE VALVES (TYPICALLY ON THE SOUTH SIDE OF THE BUILDING.

CURRENTLY THE METASYS CONTROL SYSTEM TIES INTO THE MAIN BUILDING VIA PHONES LINES. PATCH PANEL IN BLDG 12 RM 32 TO BLDG 7 TO GROUND FLOOR B-WING.

THE NEW BACNET (INTERNET BASED) CONTROLS SYSTEM WILL CONNECT TO THE NEW ETHERNET (FIBER) HUB IN BUILDING 12-ROOM 28, WHICH TRAVELS TO A HUB IN BUILDING 7, BUILDING 2 THEN THE MAIN BUILDING.

CONTRACTOR TO SUPPLY ALL EQUIPMENT NECESSARY TO GET THE CONNECTION AT THE NEW FIBER HUB IN ROOM 28 TO THE NEW PENTHOUSE CONTROLS AND COMMUNICATE WITH THE EXISTING POINTS CURRENTLY ON THE EXISTING METASYS SYSTEM.

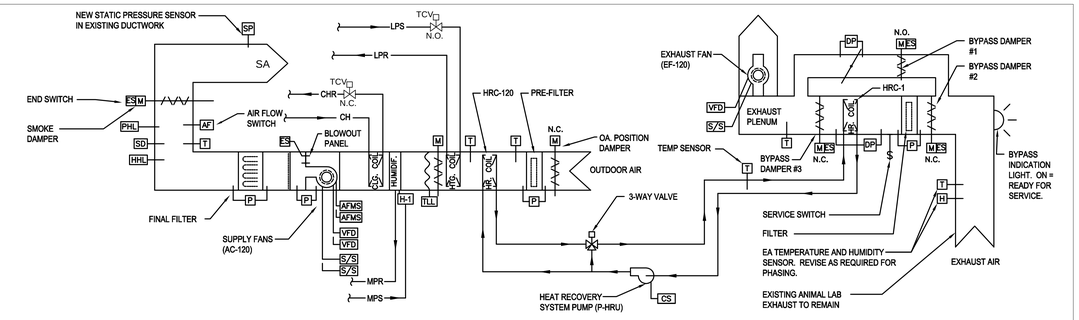

AC-120

HRU-120

SEQUENCE OF OPERATION:

PROVIDE AND INSTALL ALL CONTROLS NECESSARY TO PERFORM THE FUNCTIONS LISTED. REFER TO SPECIFICATIONS FOR ADDITIONAL REQUIREMENTS.

ALL CONTROLS SHALL BE PERFORMED BY DIRECT DIGITAL CONTROL (DDC) SYSTEMS, UNLESS NOTED OTHERWISE.

PROVIDE ALL CONTROL AND SMOKE DAMPERS WITH ELECTRIC OPERATORS, END SWITCH, AND LINKAGES, UNLESS NOTED OTHERWISE. WHENEVER FANS ARE OFF, RELATED DAMPERS, VALVES, AND SMOKE DAMPERS SHALL MOVE TO FAIL POSITIONS. HEATING VALVE WHEN UNIT IS OFF SHALL CONTINUE TO MODULATE TO MAINTAIN NEAREST TEMPERATURE SENSOR AT AHU TO 50F (ADJ) TO PREVENT OVERHEATING UNIT.

PROVIDE ALL TEMPERATURE CONTROL VALVES WITH ELECTRIC OPERATORS, UNLESS NOTED OTHERWISE.

OUTSIDE AIR DAMPERS ARE TO BE FURNISHED WITH THE UNIT. DAMPER MOTORS AND ISOLATION/ CONTROL DAMPERS AND MOTORS BY THIS CONTRACTOR. SMOKE DETECTORS ARE PROVIDED FOR AND WIRED BY THE ELECTRICAL CONTRACTOR, BUT MOUNTED INTO DUCTWORK BY MECHANICAL CONTRACTOR.

AHU OPERATION: AHU START/STOP SHALL BE CONTROLLED BY THE DDC SYSTEM. AHU FAN SHALL RUN CONTINUOUSLY. RESTART FAN, WITH A 5 SECOND DELAY, AUTOMATICALLY AFTER A POWER OUTAGE TO PREVENT IN-RUSH. END SWITCH ON DISCHARGE CONTROL/SMOKE DAMPER SHALL PROVE OPEN BEFORE FAN OPERATES.

SUPPLY FANS: SUPPLY FANS SHALL RUN CONTINUOUSLY. VFDS SHALL OPERATE SUPPLY FANS TO MAINTAIN STATIC PRESSURE SET POINT IN DUCTWORK. FANS SHALL BE OPERATED TOGETHER, IN PARALLEL.

IF EITHER SUPPLY FAN FAILS TO OPERATE WHEN ENERGIZED AN ALARM SHALL BE INITIATED THROUGH THE DDC SYSTEM. THE SECOND SUPPLY FAN SHALL CONTINUE TO OPERATE TO TRY TO MAINTAIN STATIC PRESSURE SET POINT. EXHAUST FAN (EF-120) TO REDUCE SPEED (APPROX 50%) THROUGH THE VFD TO MAINTAIN A NEUTRAL BUILDING PRESSURE. WORK WITH T&B CONTRACTOR AND DOCUMENT VFD SETTINGS DURING SINGLE FAN SHUT DOWN. WHEN BOTH FANS ARE ENERGIZED EXHAUST FAN SHALL RETURN TO NORMAL OPERATION. WHEN BOTH FANS ARE SHUT DOWN EF-120 SHALL SHUT-DOWN.

UPON SHUTDOWN OR START-UP, VFD'S SHALL LOAD OR UNLOAD FANS OVER A ONE MINUTE INTERVAL. LIMIT FAN DISCHARGE STATIC PRESSURE TO 2.5 IN.WG (ADJ); WHEN EXCEEDED, ALARM INDICATION SHALL APPEAR IN DDC, ALL FANS SHALL SHUT DOWN AND ALL VALVES AND DAMPERS SHALL MOVE TO FAIL POSITIONS. DESIRED DISCHARGE STATIC PRESSURE AND DISCHARGE STATIC PRESSURE HIGH LIMIT TO BE DETERMINED DURING TESTING, ADJUSTING AND BALANCING BY TAB CONTROLLER. FAN INLET AIR FLOW MEASURING WILL BE USED FOR BALANCING.

EXHAUST FAN: EXHAUST FAN SHALL RUN CONTINUOUSLY, SEE SUPPLY FANS SEQUENCE FOR INTERLOCKING. EXHAUST AIR SHALL BYPASS HEAT RECOVERY COIL WHENEVER HEAT RECOVERY SYSTEM PUMP IS OFF OR WHEN SERVICE ISOLATION MODE IS INITIATED. VFD ON EXHAUST FAN WILL BE USED FOR INITIAL BALANCING. BYPASS MODE MANUAL DAMPER TO BE USED TO MATCH STATIC ACROSS CLEAN FILTER AND COIL STATIC, EXHAUST FAN WILL MAINTAIN SAME CFM DURING BYPASS.

LOW LIMIT PROTECTION: ELECTRIC THERMOSTAT WITH SENSING ELEMENT ON DISCHARGE OF HEATING COIL SHALL INDICATE AN ALARM AT THE DDC, SHUTDOWN THE ASSOCIATED SUPPLY FAN AND MOVE ALL ASSOCIATED CONTROL DAMPERS AND TCV'S TO FAIL POSITIONS WHENEVER AIR DOWNSTREAM OF PREHEAT COIL FALLS BELOW 38 DEGREES F. FOR INTEGRAL FACE AND BYPASS COILS THE ELEMENTS ARE TO BE RUN VERTICALLY ON THE FACE OF THE HEATING COIL INSIDE THE DAMPER ENCLOSURE, THIS WILL REQUIRE DRILLING THE FRAME TO RUN ELEMENT AROUND THE BYPASS. SEE HEATING VALVE FAIL REQUIREMENTS ABOVE WHEN UNIT IS SHUT DOWN.

SUPPLY FAN HIGH STATIC: A HIGH LIMIT PRESSURE SENSOR LOCATED IN THE UNIT CASING, DOWNSTREAM OF THE SUPPLY FAN DISCHARGE AND UPSTREAM OF THE DISCHARGE ISOLATION/SMOKE DAMPER SHALL INDICATE AN ALARM AT THE DDC, SHUTDOWN THE ASSOCIATED SUPPLY AND RETURN FANS AND MOVE ALL ASSOCIATED CONTROL DAMPERS AND TCV'S TO FAIL POSITIONS WHENEVER STATIC PRESSURE RISES ABOVE SETPOINT OF 3.5 IN WG (ADJ.).

SMOKE CONTROL: ELECTRONIC SMOKE DETECTOR PROVIDED, INSTALLED, AND WIRED BY E.C. IN SUPPLY AIR PLENUM SHALL SENSE SMOKE IN AIRSTREAM, SEND ALARM TO FIRE ALARM SYSTEM (BY E.C.). SHUT DOWN AHU, AND PROVIDE SIGNAL TO DDC TO SHUT DOWN FAN AND CLOSE APPLICABLE ISOLATION/SMOKE DAMPERS. THE AHU SHALL BE CAPABLE OF BEING SHUTDOWN, THROUGH SMOKE DETECTOR ACTIVATION, INDEPENDENTLY. IN GENERAL BUILDING FIRE ALARM, OR DETECTION OF SMOKE AT ANY BUILDING DUCT DETECTOR, THE FIRE ALARM SYSTEM SHALL SEND A SIGNAL TO THE DDC TO SHUT DOWN AHU SUPPLY FAN, CLOSE ISOLATION/SMOKE DAMPER, AND ACTUATE VALVES AND DAMPERS TO THEIR FAIL POSITION.

VERTICAL INTEGRAL FACE AND BYPASS STEAM HEATING COIL: MODULATE CONTROL VALVE AND DAMPERS TO MAINTAIN SA TEMPERATURE (55° ADJUSTABLE). CONTROL VALVE SHALL MODULATE OPEN WITH DAMPERS IN FULL FACE POSITION DOWN TO 40°F COIL EAT. BELOW 40°F COIL EAT THE TEMPERATURE CONTROL VALVE SHALL BE IN FULL OPEN POSITION AND FACE AND BYPASS DAMPERS SHALL MODULATE TO MAINTAIN SA TEMPERATURE (55° ADJUSTABLE).

CHILLED WATER COOLING COIL: ON CALL FOR COOLING, MODULATE CONTROL VALVE TO MAINTAIN DISCHARGE AIR TEMPERATURE AT 55°. INTERLOCK WITH OPERATION OF HEATING COIL TO PREVENT SIMULTANEOUS HEATING AND COOLING.

PRE-FILTER AND FINAL FILTER: MONITOR DIRT LOADING OF FILTERS VIA MEASUREMENT OF PRESSURE DIFFERENTIAL ACROSS PRE-FILTER AND FINAL FILTER BANKS. SEND AN ALARM TO DDC AT FULL FILTER STATUS.

HUMIDIFIER: REFER TO SPECIFICATION AND CONTROL SEQUENCE THIS SHEET. THE TEMPERATURE CONTROL CONTRACTOR SHALL PROVIDE AND INSTALL THE CONTROLLING AND HIGH LIMIT SENSORS AND AIR FLOW SWITCHES. THE DDC SYSTEM SHALL MONITOR HUMIDITY (%RH) LEVELS, HIGH LIMIT ALARM AND AIR FLOW STATUS. THE TEMPERATURE CONTROL CONTRACTOR SHALL COORDINATE WITH THE HUMIDIFICATION EQUIPMENT SUPPLIER AND INSTALLER FOR SPECIFIC INTERFACE REQUIREMENTS BETWEEN THE DDC SYSTEM AND THE HUMIDIFICATION SYSTEM.

BLOW-OUT PANEL SHUT DOWN: BLOW-OUT PANELS ARE LOCATED AT FAN. IF A BLOW-OUT PANEL OPENS, AN END SWITCH SHALL SEND AN ALARM SIGNAL TO THE DDC SYSTEM AND THE UNIT SUPPLY AND EXHAUST FANS SHALL BE DEENERGIZED AND ALL VALVES AND DAMPERS SHALL MOVE TO THEIR FAIL POSITIONS.

HRU-120 SERVICE MODE: A SERVICE ISOLATION MODE SHALL BE INITIATED THROUGH A MANUAL INPUT SIGNAL FROM A MANUAL SERVICE SWITCH LOCATED ON THE UNIT'S ASSOCIATED TEMPERATURE CONTROL PANEL. WHEN INITIATED, THE BYPASS DAMPER #1 SHALL FULLY OPEN. WHEN THE BYPASS DAMPER IS PROVEN OPEN BY AN END SWITCH, THE BYPASS DAMPER #2 AND BYPASS DAMPER #3 SHALL FULLY CLOSE. WHEN THE BYPASS DAMPER #2 AND BYPASS DAMPER #3 ARE PROVEN CLOSED BY END SWITCHES AND THE MANUAL SERVICE SWITCH IS IN THE SERVICE POSITION, A GREEN "READY FOR SERVICE" PILOT LIGHT MOUNTED ON THE CONTROL PANEL SHALL ILLUMINATE. LIGHT SHALL BE LABELED "READY FOR SERVICE". THE UNIT SHALL REMAIN IN THE SERVICE ISOLATION MODE UNTIL THE SERVICE SWITCH IS MANUALLY INDEXED BACK TO THE NORMAL POSITION. THE CONTROL SEQUENCE WILL BE REVERSED UNTIL DAMPERS #2 AND #3 ARE OPEN AND THEN DAMPER #1 IS CLOSED. DAMPER CONTROLS SHALL BE HARD-WIRED FOR CONTROL. PROVIDE CONTACTS TO INDICATE SERVICE MODE TO DDC SYSTEM. ANYTIME THAT THE PUMP (P-HRU) IS DE-ENERGIZED ALL THE BYPASS DAMPERS WILL BE OPEN TO REDUCE PRESSURE LOSS THROUGH THE SYSTEM CASING. ANYTIME THAT THE CIRCULATING PUMP IS ENERGIZED THE BYPASS DAMPER 1 SHALL BE CLOSED. AT NO TIME SHALL ALL THE BYPASS DAMPERS BE ALLOWED TO BE CLOSED SIMULTANEOUSLY. THE SERVICE ISOLATION MODE TAKES PRIORITY IN EITHER CASE.

HEAT RECOVERY - RUN-AROUND LOOP COILS:
THE CONTROLLER SHALL RUN THE RUN-AROUND LOOP PUMP AND MODULATE THE RUN-AROUND LOOP MIXING VALVE FOR ENERGY RECOVERY AS FOLLOWS.

COOLING RECOVERY MODE:
THE RUN-AROUND LOOP PUMP SHALL RUN CONTINUOUSLY WHEN ENERGIZED THROUGH CONTROLLER. THE CONTROLLER SHALL MEASURE THE DISCHARGE AIR TEMPERATURE (DOWNSTREAM OF THE OUTSIDE AIR COIL) AND MODULATE THE RUN-AROUND LOOP MIXING VALVE TO MAINTAIN A SETPOINT 2°F (ADJ.) LESS THAN THE UNIT SUPPLY AIR TEMPERATURE SETPOINT. THE RUN-AROUND LOOP SHALL RUN FOR COOL RECOVERY WHENEVER:

- EXHAUST AIR TEMPERATURE IS 5°F (ADJ.) OR MORE BELOW THE OUTSIDE AIR TEMPERATURE.
- AND THE UNIT IS IN A COOLING MODE.
- AND THE SUPPLY FAN IS ON.

HEATING RECOVERY MODE:
THE RUN-AROUND LOOP PUMP SHALL RUN CONTINUOUSLY WHEN ENERGIZED THROUGH CONTROLLER. THE CONTROLLER SHALL MEASURE THE DISCHARGE AIR TEMPERATURE (DOWNSTREAM OF THE OUTSIDE AIR COIL) AND MODULATE THE RUN-AROUND LOOP MIXING VALVE TO MAINTAIN A SETPOINT 2°F (ADJ.) LESS THAN THE UNIT SUPPLY AIR TEMPERATURE SETPOINT. THE RUN-AROUND LOOP SHALL RUN FOR HEAT RECOVERY WHENEVER:
EXHAUST AIR TEMPERATURE IS 5°F (ADJ.) OR MORE ABOVE THE OUTSIDE AIR TEMPERATURE.
AND THE UNIT IS IN A HEATING MODE.
AND THE SUPPLY FAN IS ON.

- FROST PROTECTION:
THE RUN-AROUND LOOP PUMP SHALL RUN AND THE RUN-AROUND LOOP MIXING VALVE SHALL MODULATE TO SUPPLY 35°F (ADJ.) WATER TO EXHAUST COIL.

ALARMS SHALL BE PROVIDED AS FOLLOWS:

- RUN-AROUND LOOP PUMP FAILURE: COMMANDED ON, BUT THE STATUS IS OFF.
- RUN-AROUND LOOP PUMP IN HAND: COMMANDED OFF, BUT THE STATUS IS ON.
- RUN-AROUND LOOP PUMP RUNTIME EXCEEDED: STATUS RUNTIME EXCEEDS A USER DEFINABLE LIMIT (ADJ.).

1 AC-120 & HRU-120 CONTROL (BUILDING 12)

NO SCALE

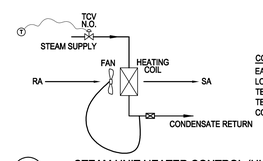

CONTROL SEQUENCE:
EACH UNIT HEATER TO HAVE SINGLE TEMPERATURE ELECTRIC THERMOSTAT, LOCATED IN ROOM SERVED, SET AT 65°F (ADJ) MAINTAINS CONSTANT TEMPERATURE BY FULLY OPENING ELECTRIC TCV ON A FALL IN ROOM TEMPERATURE. ELECTRIC STRAP-ON THERMOSTAT SHALL CYCLE FAN ON WHEN CONDENSATE IS 140° & ABOVE.

2 STEAM UNIT HEATER CONTROL (UH-1, UH-2)

NO SCALE

FINAL CONSTRUCTION DOCUMENTS

Revisions:	Date

CONSULTANTS:

Henneman Engineering Inc.
Madison:
1232 Fourier Drive, Suite 101
Madison, Wisconsin 53717-1960
Email: info@henneman.com
Website: http://www.henneman.com
T 608.833.7000
F 608.833.6996
JOB NO. 11-7256
© 2005 Henneman Engineering Inc. / IL reg. #184-000245 (001-033372) (062-036272)

PROJECT LEADER:

CHEQUAMEGON BAY ENGINEERING, INC.
CBE 2002-2011
ASHLAND, WI
211 6TH STREET WEST
ASHLAND, WI. 54806
PHONE: (715) 682-6004
FAX: (715) 682-6025
MILWAUKEE, WI
1109 N. MAYFAIR RD., SUITE 208
MILWAUKEE, WI. 53226
PHONE: (414) 258-6004
FAX: (414) 258-6154

Drawing Title: HVAC CONTROLS	Project Title: UPGRADE BUILDING 12 HEATING + VENTILATION PROJECT	Project Number: 607-11-101	Office of Facilities Management
Approved: Project Director	Location: Madison, Wisconsin 53705	Building Number: 12	
	Date: February 24, 2012 / Checked By: MJW / Drawn By: MJW	Drawing Number: M400	Department of Veterans Affairs

VA FORM 08-6231, OCT 1978

VARIABLE FREQUENCE DRIVE SCHEDULE

MARK	SERVES	MOTOR SIZE (HP)	LOCATION	VOLTAGE	PHASE	REMARKS
VFD-1	SF1-120	25	PENTHOUSE	208	3	1
VFD-2	SF2-120	25	PENTHOUSE	208	3	1
VFD-3	EF1-120	15	PENTHOUSE	208	3	1
VFD-4	EF2-120	15	PENTHOUSE	208	3	1

NOTES:
1. REFER TO DIVISION 26 SPECIFICATIONS AND COORDINATE WITH ELECTRICAL CONTRACTOR.

AIR HANDLING UNIT SCHEDULE

MARK	DESCRIPTION	LOCATION	SUPPLY FAN (2 FANS)					OUTSIDE AIRFLOW CFM	FILTERS (PRE / FINAL)	VERTICAL INTEGRAL FACE AND BYPASS COIL						CHILLED WATER COOLING COIL SCHEDULE												ELECTRICAL DATA				NOTES
			ACTUAL CFM	DESIGN CFM	EXT/TOTAL SP (IN WG)	FAN TYPE	FAN RPM			TOTAL MBH OUTPUT	EAT (DEG. F)	LAT (DEG. F)	MAX APD (IN WC)	STEAM PRESS PSIG	# / HOUR	NO. OF COILS	TOTAL MBH	SENS MBH	EAT db/wb (DEG. F)	LAT db/wb (DEG. F)	MAX APD (IN WC)	ROWS	GPM	EWT (DEG. F)	LWT (DEG. F)	MAX WPD (FT HD)	FPI	SUPPLY FAN BHP	SUPPLY FAN HP	VOLT	PH	
AC-120	DRAW THRU	PENTHOUSE	21,780	24,000 (2 @ 12,000)	2.25 / 5.9	PLENUM	1465	100%	35% / 95%	236.9	-20	71.5	0.33	30	2440	2	174.1	108.3	95/75	53.7/53.4	0.96	8	341	45	55.2	16.3	10	2 @ 15.7	2 @ 25	208	3	1, 2, 3,

NOTES: SCHEDULE IS BASED ON DESIGN CFM NOT ACTUAL CFM.
1. REVIEW SPECIFICATIONS, DRAWING LAYOUT, DETAILS AND CONTROLS FOR ADDITIONAL REQUIREMENTS.
2. MAX FACE VELOCITY ON COOLING COIL SHALL BE NO GREATER THAN 480 FPM AT DESIGN CFM.
3. REFER TO DETAIL FOR REQUIRED COMPONENTS.

FILTER SCHEDULE

TAG	DESCRIPTION	DESIGN AIRFLOW (CFM)	FACE VELOCITY (FPM)	HEIGHT NO. OF FILTERS	LENGTH NO. OF FILTERS	TOTAL NO. OF FILTERS	FILTER EFFICIENCY	FILTER SIZE (DxWxH)	RESISTANCE (w.g.)		REMARKS
									INITIAL	FINAL	
PF-AC120	PLEATED	24,000	MAX 500	PER AHU MANUF	PER AHU MANUF	PER AHU MANUF	35	PER AHU MANUF	0.2"	1.0"	1, 2, 3, 4
FF-AC120	PLEATED	24,000	MAX 500	PER AHU MANUF	PER AHU MANUF	PER AHU MANUF	95	PER AHU MANUF	0.3"	2.0"	1, 2, 3, 4
PF-EF120	PLEATED	18,000	MAX 500	-	-	-	35	-	0.2"	1.0"	1, 2, 3, 4

NOTES:
1. PROVIDE ONE NEW SET OF MEDIA FILTER TO THE RESIDENT ENGINEER PRIOR TO SUBSTANTIAL COMPLETION.
2. PROVIDE GAUGES AS SPECIFIED.
3. EFFICIENCIES ARE BASED ON ASHRAE STANDARD 52 AND UL 900 CLASS 1 OR CLASS 2.
4. CHANGE OUT RESISTANCE SET TO 0.6" w.g.

HEAT RECOVERY COIL SCHEDULE

TAG	LOCATION	DESCRIPTION	NO. OF COILS	FIN HEIGHT (IN.)	FIN LENGTH (IN.)	FACE AREA (S.F.)	FACE VEL. (FPM)	ROWS	FINS/IN.	AIR DATA									FLUID DATA					REMARKS
										CFM	DESCRIPTION	TOTAL CAPACITY (MBH)	SENSIBLE CAPACITY (MBH)	EAT (°F DB)	EAT (°F WB)	LAT (°F DB)	LAT (°F WB)	A.P.D. (IN. W.C.)	GPM	FLUID TYPE	EWT (°F)	LWT (°F)	WPD (FT.)	
HRC-AC-120	AC-120	OA COIL	2	33	104	23.8	456.9	4	12	10,890	SUMMER	100.4	100.4	95.0	75.0	86.6	72.6	0.38	26	40% PROPYLENE GLYCOL	80.9	89.3	15.3	1.
											WINTER	264.0	-	7.0	-	29.2	-	0.38	26	40% PROPYLENE GLYCOL	52.7	30.7	26.3	1.
HRC-HRU-120	HRU-120	EXHAUST COIL	1	45	128	40.0	421.2	6	11	16,849	SUMMER	197.3	193.0	75.0	62.5	85.6	66.1	0.68	52	40% PROPYLENE GLYCOL	89.3	80.9	24.7	1.
											WINTER	533.6	-	70.0	50.0	40.8	-	0.64	52	40% PROPYLENE GLYCOL	30.0	52	31.3	1.

NOTES:
1. SUBMIT COIL SCHEDULE WITH EQUIPMENT, INCLUDE CAPACITIES FOR SUMMER 95/75 EAT AND WINTER AS SCHEDULED.

EXHAUST FAN SCHEDULE

MARK	LOCATION	SERVES	DESCRIPTION	FAN DATA		FAN PERFORMANCE			MOTOR DATA				REMARKS
				DRIVE TYPE	FAN DISCHARGE UB, TH, AD	CFM	STATIC PRESSURE	RPM	BHP	HP	VOLTS	PHASE	
EF-2	ROOF	ROOM #32 MECH. ROOM	EXISTING EXHAUST FAN	-	DB	SEE REMARKS	1/4"	-	-	-	115	1	3
EF-3	ROOF	ROOMS #13 & 14	EXISTING EXHAUST FAN	-	DB	180	1/4"	-	-	1/12	115	1	1, 3
EF-4	ROOF	ROOM #7	EXISTING EXHAUST FAN	-	DB	180	1/4"	-	-	1/12	115	1	1, 3
EF-5	ROOM #31	ROOM #31	EXISTING SIDEWALL EXHAUST FAN	-	-	125	1/4"	-	-	1/25	115	1	1, 3
EF-6	NEW PENTHOUSE	DISHWASHER	INLINE (BSQ-140)	BELT	INLINE	1090	1/2"	944	0.17	1/4	115	1	1, 2
EF-7	NEW PENTHOUSE	ROOM #20 CAFE & RACK WASHER	INLINE (BSQ-130)	BELT	INLINE	595	1/2"	1021	0.1	1/4	115	1	1, 2
EF-8	NEW PENTHOUSE	ROOM #21 (HOOD)	INLINE (BSQ-140HP)	BELT	INLINE	600	3/4"	1183	0.16	1/3	115	1	1, 2
EF-9	ROOF	ROOM #9 PROCEDURE HOOD	EXISTING EXHAUST FAN	-	DB	600	1/8"	-	-	1/6	115	1	1, 3
EF-10	ROOF	CAGE WASH	EXISTING EXHAUST FAN	-	UB	600	3/4"	1300	-	1/2	208	3	1, 3
EF-11	ROOF	AUTOCLAVE HOOD	EXISTING EXHAUST FAN	-	UB	1000	3/4"	1600	-	1/2	208	3	1, 3
EF-12	NEW PENTHOUSE	PENTHOUSE VENTILATION EXHAUST	INLINE (BSQ-180)	BELT	INLINE	4775	0.25"	1224	1.18	1.5	208	1	1
SF-13	NEW PENTHOUSE	PENTHOUSE VENTILATION SUPPLY	INLINE (BSQ-180)	BELT	INLINE	4775	0.25"	1224	1.18	1.5	208	1	1

NOTES:
1. BALANCE TO CFM SCHEDULED.
2. REPLACE ROOF MOUNTED PRV FAN WITH NEW INLINE FAN. MODIFY EXISTING ROOF CURB AND DUCTWORK TO EXTEND UP INTO PENTHOUSE.
3. DOCUMENT EXISTING CFM AND CONDITIONS OF FAN PRIOR TO DEMOLITION.

HEAT EXCHANGER SCHEDULE

MARK	DESCRIPTION	STEAM CAP (LBS/HR)	STEAM PRESS. (PSIG)	WATER FLOW (GPM)	ENTERING WATER TEMP (°F)	LEAVING WATER TEMP (°F)	FOULING FACTOR	PRESSURE DROP (FEET HEAD)	SQ. FT. HTG. SURFACE	DIA. (IN.)	LENGTH (FT.)	NO. of PASSES	REMARKS
HX-1	STEAM TO HOT WATER	750	10	73	160	180	0.00135	0.9	23.6	8"	3	4	1.

NOTES:
1. MOUNT HIGH FROM STRUCTURE, TO REPLACE EXISTING HEAT EXCHANGER.

HEAT RECOVERY UNIT SCHEDULE

MARK	LOCATION	SERVES	DESCRIPTION MODEL #	FAN DATA			FAN PERFORMANCE			MOTOR DATA				REMARKS
				NO. OF FANS	DRIVE TYPE	FAN DISCHARGE UB, TH, AD	CFM	STATIC PRESSURE	RPM	BHP	HP	VOLTS	PHASE	
HRU-120	PENTHOUSE	ANIMAL HOLDING EXHAUST	INLINE DILUTION FUME EXHAUST FAN WITH HIGH VELOCITY DISCHARGE	2	DIRECT	PLENUM	18,000 (2 @ 9,000)	3.5"	1740	2 @ 7.16	2@ 15	208	3	1, 2, 3, 4

NOTES:
1. STATIC PRESSURE INCLUDES 2" FOR EXISTING SYSTEM AND 2" FOR HEAT RECOVERY PLENUM, INCLUDING HEAT RECOVERY COIL, ISOLATION DAMPERS, AND FILTERS.
2. MINIMUM 3,500 FPM DISCHARGE VELOCITY AT SCHEDULED CFM.
3. PROVIDE SILENCER AS REQUIRED TO MEET A NET SOUND LEVEL OF 62dB AT A 10' DISTANCE.
4. MOTOR TO BE NEMA PREMIUM EFFICIENCY.

STEAM PRESSURE REDUCING VALVE SCHEDULE

MARK	LOCATION	DESCRIPTION	PILOT OPERATED OR AIR OPERATED	MINIMUM SIZE (IN.)	REGULATING OR REDUCING VALVE			REMARKS
					INLET STEAM PRESS-PSIG	OUTLET STEAM PRESS-PSIG	CAPACITY LBS/HR STM	
PRV-1	PENTHOUSE	2/3	PILOT	2"	100	45	650	1.
PRV-2	PENTHOUSE	1/3	PILOT	1-1/2"	100	45	330	1.

NOTES:
1. CAPACITIES BASED ON 10% DROOP. (TO SINK GRADUALLY)

HUMIDIFIER SCHEDULE

MARK	LOCATION	CAPACITY (LB/HR)	DUCT SIZE (WxH)	C.F.M.	AIR TEMP. IN DUCT (DEG F)	ROOM CONDITION (DEG F/% RH)	ABSORPTION DISTANCE	REMARKS
H-120	AC-120	620	PER AHU MANUF.	24,000	55	72 / 35	2' MAX	1, 2

NOTES:
1. VERIFY CONTROLS AND UNIT CASING WIDTH AND HEIGHT BEFORE ORDERING HUMIDIFIER.
2. PROVIDE HUMIDIFIER CONTROLS TO ALLOW FOR DISSIPATION DISTANCE AT MAXIMUM HUMIDIFICATION LOADS, SYSTEM BASED ON DISPERSION TUBE STYLE.

PUMP SCHEDULE

MARK	DESCRIPTION	GPM	IMPELLER SIZE INCH	SUCTION / DISCHARGE SIZES (IN.)	HEAD (FT OF WATER)		FLUID TEMP	MINIMUM EFF. %	MOTOR DATA					REMARKS
					OPERATING	SHUT-OFF			BHP	HP	RPM	VOLTS	PHASE	
P-HRC	IN-LINE	52	5.0	1.25 / 1.25	75	96	70° F	53.61	1.89	3	3450	208	3	1, 2, 3, 4, 5
HWP-1	BASE MOUNT	73	9.375	1.5 / 1.25	90	100	170° F	56	2.94	5	1750	208	3	1, 2, 4, 6

NOTES:
1. PUMP MOTOR SHALL BE FULLY NON-OVERLOADING.
2. BRAKE HORSEPOWER SHALL NOT EXCEED 75% OF MOTOR HORSEPOWER.
3. INCLUDE A TRIPLE DUTY VALVE SIZED FOR 1 TO 2 PSI PRESSURE DROP AT SCHEDULED DESIGN FLOW.
4. MOTOR TO BE NEMA PREMIUM EFFICIENCY.
5. BASED ON 40% PROPYLENE GLYCOL.
6. NEW HOT WATER PUMP TO REPLACE EXISTING HOT WATER PUMP.

AIR SEPARATOR SCHEDULE

MARK	SYSTEM	LOCATION	SIZE (IN)	GPM	STRAINER	REMARKS
AS-1	HW	MECH. ROOM	3"	73	NO	1

NOTES:
1. MOUNT HIGH FROM STRUCTURE, TO REPLACE EXISTING AIR SEPARATOR.

STEAM UNIT HEATER SCHEDULE

MARK	DESCRIPTION	LOCATION	CFM	OUTLET FPM	INLET COIL PRESS. (PSIG)	CAPACITY (BTUH)	FINAL AIR TEMP	MOTOR				REMARKS
								HP	RPM	VOLTS	PHASE	
UH-1	HORIZ. THROW	PENTHOUSE	630	460	30	43,200	120 F	1/20	900	115	1	1, 2, 3
UH-2	HORIZ. THROW	PENTHOUSE	630	460	30	43,200	120 F	1/20	900	115	1	1, 2, 3

NOTES:
1. CAPACITIES ARE BASED ON 60°F EAT & FAN SPEED SCHEDULED.
2. PROVIDE ALL HORIZONTAL DISCHARGE UNITS W/4-WAY DISCHARGE LOUVERS.
3. SUSPEND ALL UNITS UTILIZING 0.35" DOUBLE DEFLECTION NEOPRENE PAD VIBRATION ISOLATORS, MINIMUM 7'-0" ABOVE FLOOR, UNLESS NOTED OTHERWISE.

SAFETY RELIEF VALVE SCHEDULE

MARK	LOCATION	SYSTEM	CAPACITY (LB/HR)	SET PRESS. (PSIG)	QUANTITY	REMARKS
SRV-1	PENTHOUSE	STEAM	1,141	55	1	

FINAL CONSTRUCTION DOCUMENTS

Revisions: | Date

CONSULTANTS:

Henneman Engineering Inc.
Madison:
1232 Fourier Drive, Suite 101 T 608.833.7000
Madison, Wisconsin 53717-1960 F 608.833.6996
Email: info@henneman.com
Website: http://www.henneman.com
JOB NO. 11-7256

© 2005 Henneman Engineering Inc. / IL reg. #184-000245 (001-013372) (062-036272)

PROJECT LEADER:

CHEQUAMEGON BAY ENGINEERING, INC.
ASHLAND, WI
211 6TH STREET WEST
ASHLAND, WI, 54806
PHONE: (715) 682-6004
FAX: (715) 682-6025
MILWAUKEE, WI
1109 N. MAYFAIR RD., SUITE 208
MILWAUKEE, WI, 53226
PHONE: (414) 258-6004
FAX: (414) 258-6154

Drawing Title	Project Title	Project Number
HVAC SCHEDULES	UPGRADE BUILDING 12 HEATING + VENTILATION PROJECT	607-11-101
		Building Number: 12
Approved: Project Director	Location: Madison, Wisconsin 53705	Drawing Number: M500
	Date: February 24, 2012 / Checked By: MJW / Drawn By: JGZ	

Office of Facilities Management
Department of Veterans Affairs

VA FORM 08-6231, OCT 1978

NOT ALL SYMBOLS ARE USED

FIRE ALARM SYSTEM

SYMBOL	DESCRIPTION
F	COMBINATION AUDIBLE (HORN) /VISUAL ALARM - 15cd UNLESS NOTED OTHERWISE
F_R	ADDRESSABLE RELAY / MONITOR RELAY
F_{DT}	DUCT SMOKE DETECTOR TEST SWITCH
F_D	AUTOMATIC SENSOR - DUCT SMOKE DETECTOR

TELECOMMUNICATIONS SYSTEMS

SYMBOL	DESCRIPTION
W	TELEPHONE OUTLET, W= WALL MOUNTED 54" AFF

TYPICAL DEVICE MOUNTING HEIGHTS

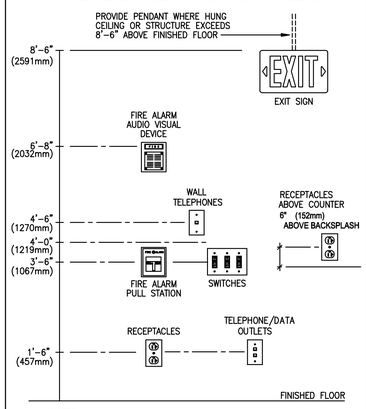

NOTES:

1. ALL MOUNTING HEIGHTS SHALL BE MEASURED FROM FINISHED FLOOR TO CENTERLINE OF DEVICE EXCEPT EXIT SIGNS.
2. DEVICES SHALL BE INSTALLED ON A COMMON VERTICAL CENTERLINE WHEREVER POSSIBLE.
3. ALL DEVICES SHALL BE INSTALLED AT MOUNTING HEIGHTS AS INDICATED ON THIS DETAIL, UNLESS OTHERWISE NOTED.
4. INSTALL PER A.D.A. REQUIREMENTS, COORDINATE EXACT LOCATIONS WITH ARCHITECT PRIOR TO INSTALLATION.

MOUNTING HEIGHTS OF ELECTRICAL DEVICES

"UP" MEANS UP FROM FINISHED FLOOR TO CENTERLINE OF DEVICE
"DN" MEANS DOWN FROM FINISHED CEILING TO CENTERLINE OF DEVICE

PUSHBUTTON STATIONS	UP 42"
DISCONNECT SWITCHES	UP 66"
PANELS TOP @	72" (TOP)

LINE WEIGHT KEY

———	ALL ITEMS INDICATED BY A DARK SOLID LINE ARE NEW
———	ALL ITEMS INDICATED BY A LIGHT SOLID LINE ARE EXISTING TO REMAIN
- - - - -	ALL ITEMS INDICATED BY A DARK DASHED LINE ARE EXISTING TO BE REMOVED OR RELOCATED.

LIGHTING FIXTURES

SYMBOL	DESCRIPTION
F1 — 23 — a,b	FIXTURE TYPE CIRCUIT CONTROL DEVICE: FIRST LETTER CONNECTED TO CENTER LAMP(S), SECOND LETTER CONNECTED TO OUTBOARD LAMPS (UNLESS NOTED OTHERWISE)
	SURFACE/SUSPENDED MOUNTED FLUORESCENT STRIP OR LINEAR, NORMAL POWER
	BATTERY PACK EMERGENCY LIGHTING
	WALL MOUNTED FIXTURE, NORMAL POWER
	INDICATES FIXTURE IS WALL MOUNTED

SWITCHES

SYMBOL	DESCRIPTION
$	SINGLE POLE (LOWER CASE LETTER INDICATES SWITCH LEG)

RECEPTACLES

SYMBOL	DESCRIPTION
	DUPLEX RECEPTACLE
G	GROUND FAULT CIRCUIT INTERRUPTER
W	WEATHER PROOF

POWER SYSTEMS

SYMBOL	DESCRIPTION
SWBD 1	LARGE ELECTRICAL EQUIPMENT WITH DESIGNATION - DRAWN TO SCALE
	DISTRIBUTION PANEL WITH DESIGNATION
	BRANCH PANEL WITH DESIGNATION
	MOTOR WITH DESIGNATION, SEE MOTOR SCHEDULE
G	GENERATOR SYSTEM WITH DESIGNATION
T	TRANSFORMER WITH DESIGNATION - DRAWN TO SCALE
	DISCONNECT SWITCH
	COMBINATION MOTOR STARTER / DISCONNECT SWITCH
J	JUNCTION BOX
P	PULL BOX
	EQUIPMENT CONNECTION
XX #	EQUIPMENT CONNECTION TAG

LIGHTNING PROTECTION

SYMBOL	DESCRIPTION
AT	AIR TERMINAL LOCATION
DC	DOWN CONDUCTOR LOCATION
GRD	GROUND ROD LOCATION

ELECTRICAL ABBREVIATIONS

AFF	ABOVE FINISHED FLOOR	MLO	MAIN LUGS ONLY
C	CONDUIT	MSO	MERITER STANDARD OUTLET
CB	CIRCUIT BREAKER	MTR	MOTOR
CU	COPPER	NIC	NOT IN CONTRACT
EC	ELECTRICAL CONTRACTOR	NL	NIGHT LIGHT
ELEC	ELECTRIC, ELECTRICAL	NTS	NOT TO SCALE
EM	EMERGENCY	OAH	OVERALL HEIGHT
EMT	ELECTRICAL METALLIC TUBING	O.C.	ON CENTER
ETR	EXISTING TO REMAIN	PC	PHOTO CELL
EWC	ELECTRIC WATER COOLER	PNL	PANEL
EX	EXISTING	PR	PAIR
FLR	FLOOR	PVC	POLYVINYL CHLORIDE
GRS	GALVANIZED RIGID STEEL	RE	REMOVE
HOA	HAND-OFF-AUTOMATIC SWITCH	REL	RELOCATE
HP	HORSEPOWER	SP	SPARE
IMC	INTERMEDIATE METALLIC CONDUIT	TEL	TELEPHONE
JB	JUNCTION BOX	TC	TIME CLOCK
MCC	MOTOR CONTROL CENTER	TCP	TEMPERATURE CONTROL PANEL
MIN	MINIMUM	TYP	TYPICAL
CPU	COMPUTER CPU	UH	UNIT HEATER
DVR	DIGITAL VIDEO RECORDER	VFD	VARIABLE FREQUENCY DRIVE
MIC	MICROWAVE	W	WEATHERPROOF
COMP	COMPUTER	UC	UNDERCOUNTER
		REF	REFRIGERATOR

GENERAL ELECTRICAL DEMOLITION REQUIREMENTS:

1. ELECTRICAL CONTRACTOR SHALL VERIFY THE EXISTING CONDITIONS AT THE PROJECT SITE BEFORE SUBMITTING COST PROPOSAL.
2. THE ELECTRICAL CONTRACTOR SHALL VISIT THE SITE TO VERIFY DEVICES NOT SHOWN. ALL DEVICES NEED TO BE REMOVED IN THE DEMOLITION AREA UNLESS NOTED ON THE DRAWINGS.
3. IT IS MANDATORY THAT THE EXISTING BUILDING REMAIN IN CONTINUOUS AND NON-INTERRUPTED OPERATION DURING REMODELING/ALTERING. SERVICES TO EXISTING BUILDING SHALL BE KEPT ON CONTINUOUS OPERATION INCLUDING POWER, LIGHTING, TELEPHONE, FIRE ALARM, ETC. ANY ABSOLUTELY NECESSARY INTERRUPTION OF THESE SERVICES TO ACCOMPLISH PROJECT CONSTRUCTION, SHALL BE HELD TO A MINIMUM AND ARRANGED WITH THE OWNER THROUGH THE GENERAL CONTRACTOR TWO (2) WEEKS IN ADVANCE. TEMPORARY SERVICES SHALL BE FURNISHED AND INSTALLED WHERE NECESSARY TO ACCOMPLISH THIS PURPOSE. TEMPORARIES SHALL BE REMOVED ONLY AFTER NEW PERMANENT SERVICES ARE INSTALLED AND FULLY OPERATIONAL.
4. ELECTRICAL CONTRACTOR SHALL BE RESPONSIBLE FOR HIS OWN DEMOLITION, REMOVAL, CAPPING, STORING, ABANDONING, DISCONNECTING, RELOCATING AND RECONNECTION OF EXISTING ELECTRICAL EQUIPMENT AND MATERIAL. ALL CUTTING, PATCHING, REPAIRING, REPLACEMENT AND REFINISHING, SHALL MATCH THE EXISTING CONSTRUCTION AS NEARLY AS POSSIBLE.
5. EXCEPT WHERE OTHERWISE SHOWN OR NOTED ON DRAWING - "TO BE RETAINED, RELOCATED" OR HEREINAFTER NOTED, ALL EXISTING ELECTRICAL EQUIPMENT AND MATERIAL IN AREAS TO BE REMODELED/ALTERED SHALL BE REMOVED WHERE THEY INTERFERE WITH PROPOSED NEW CONSTRUCTION AND/OR INTERFERE WITH PROPOSED USAGE OF SPACE BY OWNER AS FOLLOWS:
   a. REMOVE ANY CONDUITS PROTRUDING ABOVE FINISHED FLOOR, CAP AND FINISH OVER WITH FLOOR MATERIAL TO MATCH EXISTING.
   b. REMOVE ALL LIGHT FIXTURES, RECEPTACLES, SWITCHES, ETC. AND ASSOCIATED WIRING.
   c. REMOVE ALL SURFACE MOUNTED CONDUIT/BOXES AND THEIR ASSOCIATED WIRING. REMOVE ALL CONCEALED RACEWAYS, BOXES AND WIRING FROM PARTITIONS BEING DEMOLISHED.
   d. REMOVE ALL EXISTING WIRING/CABLING FROM ALL EXISTING CONCEALED RACEWAYS IN PARTITION THAT ARE TO REMAIN.
   e. ANY FEEDERS, CONDUITS, BRANCH CIRCUITS, SIGNAL AND TELEPHONE CIRCUITS, ETC. PASSING THROUGH THE REMODELED AREAS TO SERVE (OR BE SERVED FROM) EXISTING ADJACENT, REMOTE OR SURROUNDING AREAS THAT ARE TO REMAIN, SHALL BE RETAINED AND KEPT OPERATIONAL AND SHALL BE REROUTED IN ALL CASES WHERE THEY INTERFERE WITH ANY NEW WORK OR USAGE TO BE ACCOMPLISHED IN THE REMODELED AREA.
   f. WHERE DEVICES ARE OMITTED FROM PRESENT BRANCH CIRCUITS, THE REMAINING DEVICES SHALL BE REWIRED, IF NEEDED AND AS REQUIRED, TO REMAIN ON THEIR RESPECTIVE CIRCUITS AND IN OPERATING CONDITION.
6. ELECTRICAL CONTRACTOR SHALL REFER TO ARCHITECTURAL DRAWINGS TO FAMILIARIZE HIMSELF WITH EXTENT OF ALTERATION/REMODELING WORK AND MORE SPECIFICALLY NOTE WHERE NEW PARTITIONING IS BEING INSTALLED, WHERE EXISTING PARTITIONING IS BEING REMOVED, WHERE CEILINGS ARE BEING REMOVED AND OR REPLACED, ETC.
7. ALL WIRING (POWER, LIGHTING) NOT REUSED FOR REMODELING AREAS SHALL BE COMPLETELY REMOVED BACK TO ASSOCIATED PANELS. EMPTY BOXES AND CONDUITS SHALL BE REMOVED BEYOND REMODELED AREA (ABOVE CEILING).
8. THE OWNER SHALL HAVE THE FIRST CHOICE TO ACCEPT EXISTING DEVICES BEING REMOVED.

GENERAL NOTES:

1.) ALL BRANCH CIRCUITS SHALL HAVE GROUND CONDUCTORS.

2.) THE ELECTRICAL CONTRACTOR SHALL PROVIDE, IF REQUIRED, ADJUSTMENTS (±) 6'-0" IN THE LOCATION OF ALL SYSTEM DEVICES, FIXTURES, OUTLETS, PANELS, ETC. IN ORDER TO EXPEDITE THE ELECTRICAL WORK. THE POSITION OF ALL WORK AS SHOWN IS INTENDED TO BE FIXED AND IN THE PROPER LOCATION. SUCH REQUIRED ADJUSTMENT SHALL BE DETERMINED BY THE A/E.

3.) SMOKE DETECTORS SHALL BE MOUNTED A MINIMUM OF 3'-0" FROM EACH AIR SUPPLY DIFFUSER.

4.) PROVIDE SEPARATE NEUTRAL FOR EACH BRANCH CIRCUIT PHASE CONDUCTOR.

5.) WHERE NEW DEVICES ARE SHOWN THE ELECTRICAL CONTRACTOR SHALL DO ALL CUTTING. THE GENERAL CONTRACTOR SHALL DO ALL PATCHING AND PAINTING OF EXISTING WALLS. THE ELECTRICAL CONTRACTOR SHALL FAMILIARIZE HIMSELF WITH EXISTING WALL CONSTRUCTION. WHERE POSSIBLE ELECTRICAL CONTRACTOR MAY USE EXISTING BRANCH CIRCUIT CONDUIT BUT NEW CIRCUIT WIRING WILL NEED TO BE PULLED.

FINAL CONSTRUCTION DOCUMENTS

Revisions:	Date

VA FORM 08-6231, OCT 1978

CONSULTANTS:

Henneman Engineering Inc.
Madison:
1232 Fourier Drive, Suite 101 T 608.833.7000
Madison, Wisconsin 53717-1960 F 608.833.6996
Email: info@henneman.com
Website: http://www.henneman.com
JOB NO. 11-7256

© 2005 Henneman Engineering Inc. / IL reg. #184-000246 (051-053373) (042-036272)

PROJECT LEADER:

CHEQUAMEGON BAY ENGINEERING, INC.
ASHLAND, WI
212 6TH STREET WEST
ASHLAND, WI. 54806
PHONE: (715) 682-6004
FAX: (715) 682-6025
MILWAUKEE, WI
1109 N. MAYFAIR RD., SUITE 208
MILWAUKEE, WI. 53226
PHONE: (414) 258-6004
FAX: (414) 258-6154

Drawing Title	ELECTRICAL NOTES, SYMBOLS AND ABBREVIATIONS
Approved: Project Director	
Project Title	UPGRADE BUILDING 12 HEATING + VENTILATION PROJECT
Project Number	607-11-101
Building Number	12
Location	Madison, Wisconsin 53705
Date	February 24, 2012
Checked By:	HEI
Drawn By:	HEI
Drawing Number	E001

Office of Facilities Management

Department of Veterans Affairs

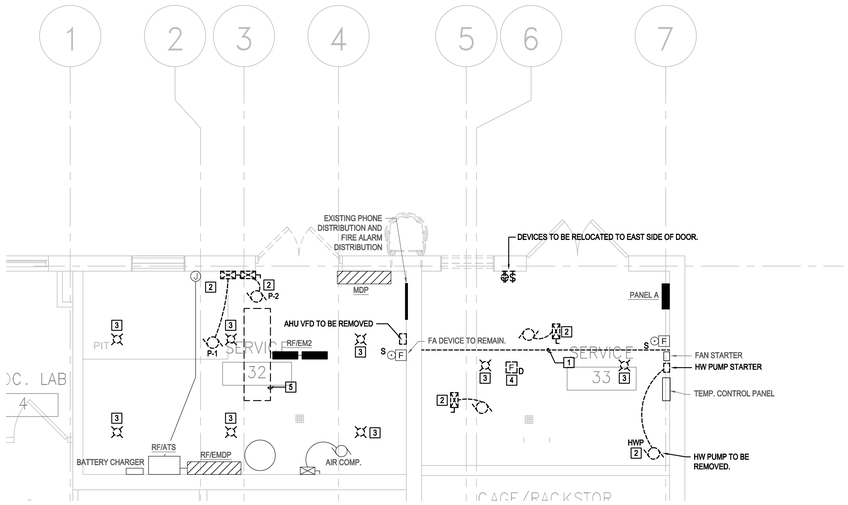

2 1/4" MECHANICAL ROOM PLAN - DEMOLITION

SCALE: 1/4" = 1'-0"

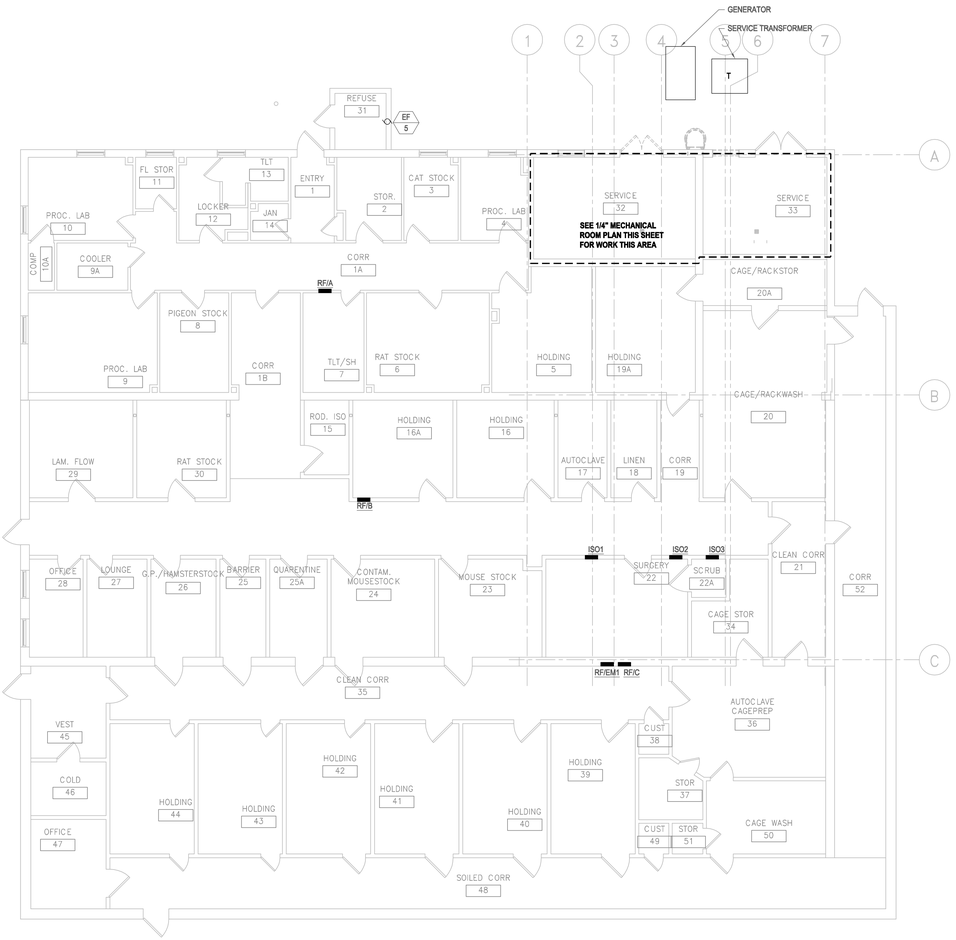

1 ELECTRICAL FLOOR PLAN - DEMOLITION

SCALE: 1/8" = 1'-0"

KEYED DEMOLITION NOTES (SHEET ED101):

1. RELOCATE FIRE ALARM CONDUIT TO COORDINATE WITH NEW STAIR INSTALLATION TO NEW PENTHOUSE.
2. DISCONNECT EQUIPMENT AND REMOVE BRANCH CIRCUIT WITH ASSOCIATED RACEWAY AND CONTROLLER BACK TO ITS SOURCE.
3. REMOVE LIGHTING. RECONFIGURE BRANCH CIRCUIT AND CONTROL AS INDICATED ON NEW WORK SHEET E101.
4. DISCONNECT AND REMOVE FIRE ALARM DUCT DETECTOR. REMOVE CABLING BACK TO NEAREST TERMINATION POINT.
5. REROUTE ALL CONDUIT AT CEILING WITHIN OUTLINED AREA TO PERMIT MECHANICAL PIPING TO NEW PENTHOUSE. ELECTRICAL CONTRACTOR SHALL VERIFY EXISTING CONDITIONS PRIOR TO BIDDING TO CONFIRM EXACT SCOPE OF WORK.

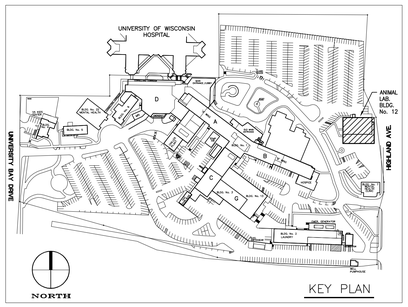

FINAL CONSTRUCTION DOCUMENTS

Revisions:	Date

CONSULTANTS:

Henneman Engineering Inc.
Madison:
1232 Fourier Drive, Suite 101
Madison, Wisconsin 53717-1960
T 608.833.7000
F 608.833.6996
Email: info@henneman.com
Website: http://www.henneman.com

JOB NO. 11-7256

© 2003 Henneman Engineering Inc. / IL reg. #184-000245 (051-013373) (042-036372)

PROJECT LEADER:

CHEQUAMEGON BAY ENGINEERING, INC.
CBE 2002-2011
ASHLAND, WI
212 6TH STREET WEST
ASHLAND, WI. 54806
PHONE: (715) 682-6004
FAX: (715) 682-6025
MILWAUKEE, WI
1109 N. MAYFAIR RD., SUITE 208
MILWAUKEE, WI. 53226
PHONE: (414) 258-6004
FAX: (414) 258-6154

Drawing Title: ELECTRICAL FLOOR PLAN - DEMOLITION	Project Title: **UPGRADE BUILDING 12 HEATING + VENTILATION PROJECT**	Project Number: 607-11-101	Office of Facilities Management
		Building Number: 12	
Approved: Project Director	Location: Madison, Wisconsin 53705	Drawing Number: ED101	Department of Veterans Affairs
	Date: February 24, 2012 — Checked By: HEI — Drawn By: HEI		

VA FORM 08-6231, OCT 1978

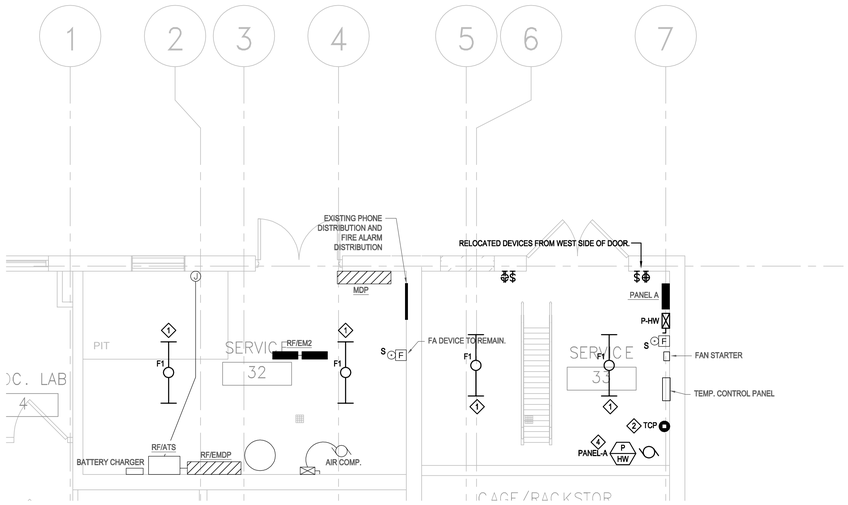

2 1/4" MECHANICAL ROOM PLAN - NEW WORK

SCALE: 1/4" = 1'-0"

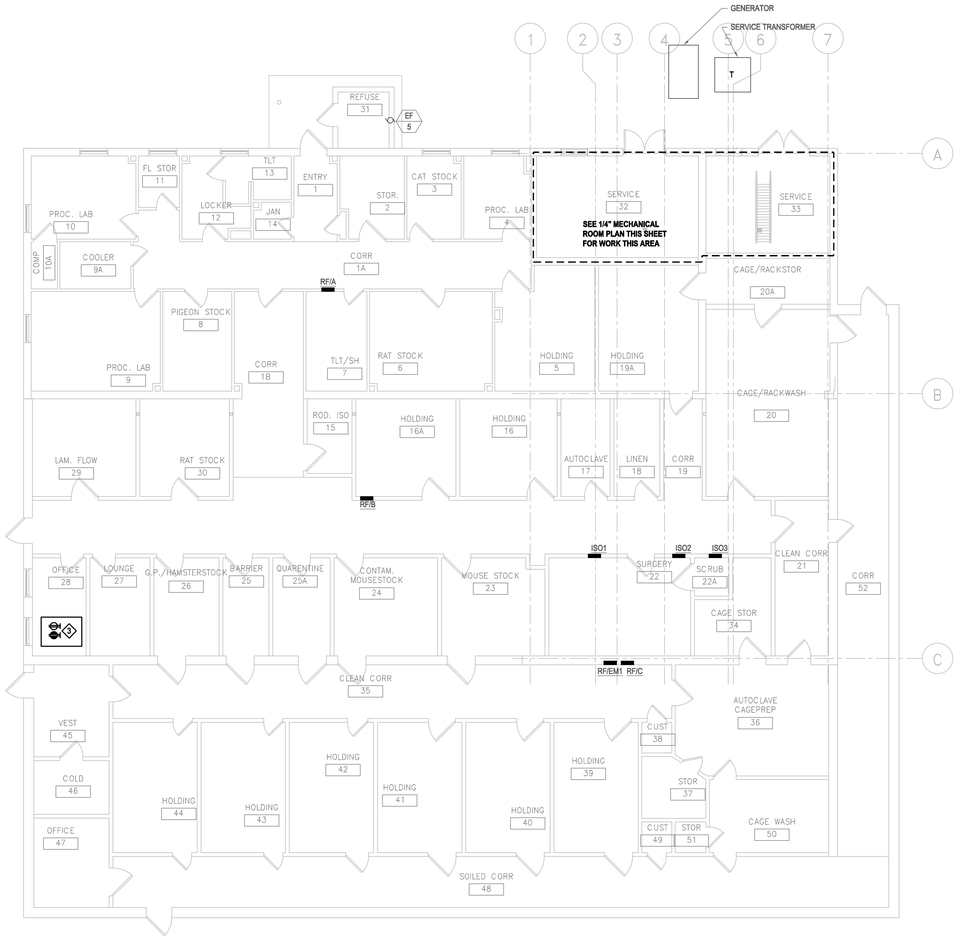

1 ELECTRICAL FLOOR PLAN - NEW WORK

SCALE: 1/8" = 1'-0"

KEYED NEW WORK NOTES (SHEET E101):

1. CONNECT NEW LIGHTING TO EXISTING CIRCUIT AND CONTROL FOR THIS ROOM.
2. 120V CONNECTION TO TEMPERATURE CONTROL PANEL FROM EXISTING PANEL RF/EM2.
3. INSTALL (1) DUPLEX RECEPTACLE CIRCUITED FROM GENERATOR POWER PANEL RF/EM1 AND (1) DUPLEX RECEPTACLE CIRCUITED FROM NORMAL POWER PANEL RF/B. COORDINATE EXACT LOCATION WITHIN ROOM WITH VA FACILITY STAFF PRIOR TO BEGINNING ROUGH IN.
4. CONNECTION TO NEW HOT WATER PUMP FROM EXISTING PANEL A. REMOVE AN EXISTING SPARE 3-POLE BREAKER IN PANEL AND INSTALL A NEW 35A-3P BREAKER TO FEED NEW PUMP.

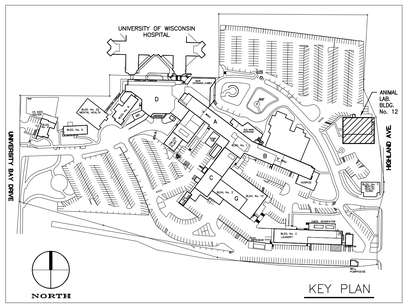

FINAL CONSTRUCTION DOCUMENTS

Revisions:	Date

VA FORM 08-6231, OCT 1978

CONSULTANTS:

Henneman Engineering Inc.
Madison:
1232 Fourier Drive, Suite 101 T 608.833.7000
Madison, Wisconsin 53717-1960 F 608.833.6996
Email: info@henneman.com
Website: http://www.henneman.com
JOB NO. 11-7256
© 2005 Henneman Engineering Inc. / IL reg. #184-000245 (001-013372) (062-036272)

PROJECT LEADER:

CHEQUAMEGON BAY ENGINEERING, INC.
CBE 3052-2013
ASHLAND, WI
211 6TH STREET WEST
ASHLAND, WI. 54806
PHONE: (715) 682-6004
FAX: (715) 682-6025
MILWAUKEE, WI
1109 N. MAYFAIR RD., SUITE 208
MILWAUKEE, WI. 53226
PHONE: (414) 259-6004
FAX: (414) 258-6154

Drawing Title: ELECTRICAL FLOOR PLAN - NEW WORK	Project Title: UPGRADE BUILDING 12 HEATING + VENTILATION PROJECT		Project Number: 607-11-101
Approved: Project Director	Location: Madison, Wisconsin 53705		Building Number: 12
	Date: February 24, 2012	Checked By: HEI / Drawn By: HEI	Drawing Number: E101

Office of Facilities Management

Department of Veterans Affairs

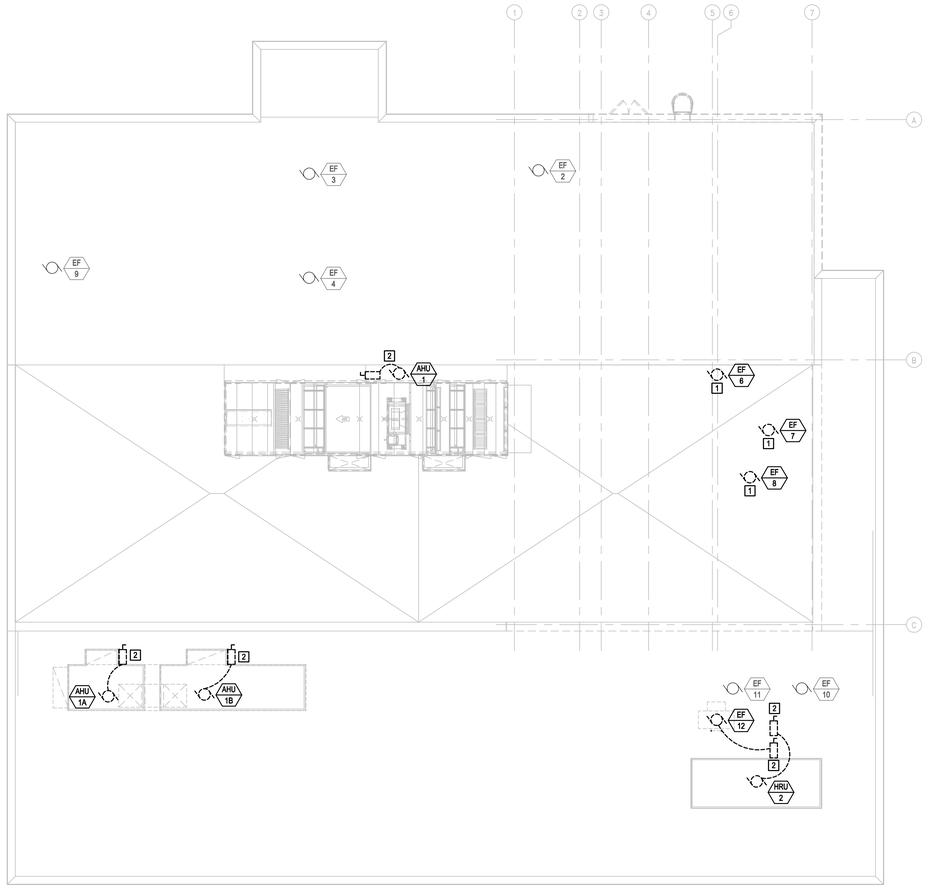

1 ELECTRICAL ROOF PLAN - DEMOLITION

SCALE: 1/8" = 1'-0"

12" 0 1' 5' 10' 20'

KEYED DEMOLITION NOTES (SHEET ED102):

1. DISCONNECT EXHAUST FAN AND REROUTE FEEDER TO NEW EXHAUST FAN LOCATION SHOWN ON E102.
2. DISCONNECT MECHANICAL EQUIPMENT AND REMOVE FEEDER WITH ASSOCIATED RACEWAY BACK TO ITS SOURCE.

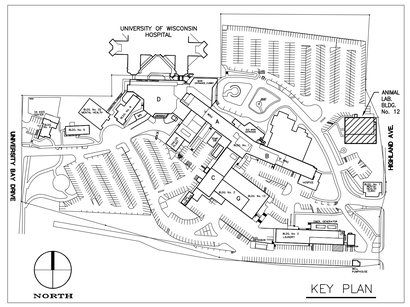

KEY PLAN

FINAL CONSTRUCTION DOCUMENTS

Revisions:	Date

CONSULTANTS:

Henneman Engineering Inc.
Madison:
1232 Fourier Drive, Suite 101 **T** 608.833.7000
Madison, Wisconsin 53717-1960 **F** 608.833.6996
Email: info@henneman.com
Website: http://www.henneman.com
JOB NO. 11-7256
© 2005 Henneman Engineering Inc. / IL reg. #184-000245 (001-013372) (062-036272)

PROJECT LEADER:

CHEQUAMEGON BAY ENGINEERING, INC.
CBE 3052-2013

ASHLAND, WI
211 6TH STREET WEST
ASHLAND, WI. 54806
PHONE: (715) 682-6004
FAX: (715) 682-6025

MILWAUKEE, WI
1109 N. MAYFAIR RD., SUITE 208
MILWAUKEE, WI. 53226
PHONE: (414) 259-6004
FAX: (414) 258-6154

Drawing Title	Project Title	Project Number	
ELECTRICAL ROOF PLAN - DEMOLITION	**UPGRADE BUILDING 12 HEATING + VENTILATION PROJECT**	607-11-101	Office of Facilities Management
Approved: Project Director	Location: Madison, Wisconsin 53705	Building Number: 12	
	Date: February 24, 2012 / Checked By: HEI / Drawn By: HEI	Drawing Number: ED102	Department of Veterans Affairs

VA FORM 08-6231, OCT 1978

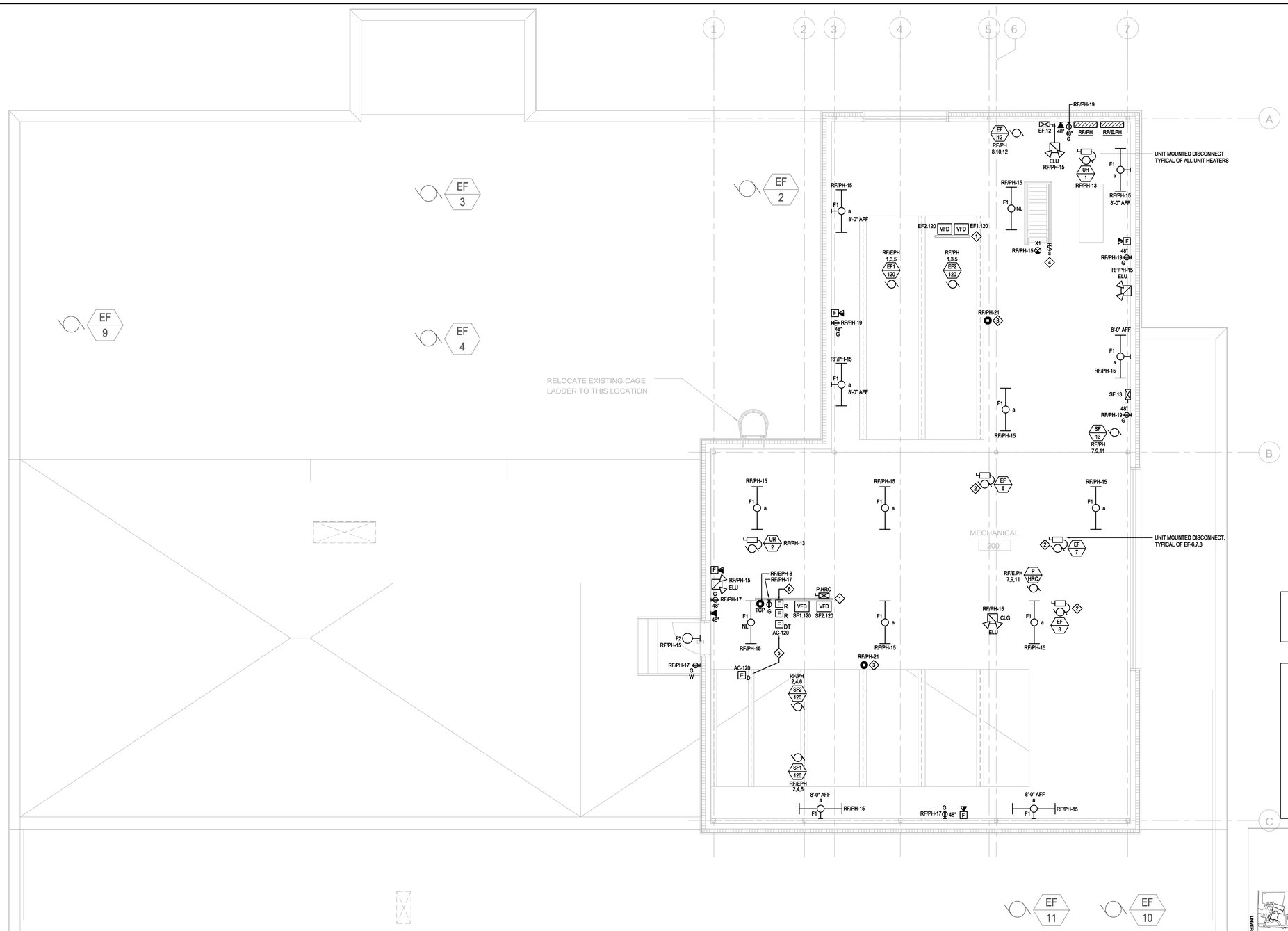

1 ELECTRICAL ROOF PLAN - NEW WORK

SCALE: 1/4" = 1'-0"

GENERAL NEW WORK NOTES (SHEET E102):

1. COORDINATE LOCATION OF LIGHT FIXTURES WITH MECHANICAL WORK.

KEYED NEW WORK NOTES (SHEET E102):

1. EQUIPMENT MOUNTED TO FREE STANDING WALL. WALL FABRICATED AND INSTALLED BY MECHANICAL CONTRACTOR.
2. CONNECT EXHAUST FAN TO EXISTING CIRCUIT SERVING REMOVED FAN.
3. SINGLE POINT CONNECTION TO PACKAGED AIR HANDLER LIGHTING AND CONVENIENCE RECEPTACLES.
4. SWITCH MOUNTED TO UNI-STRUT COLUMN. COLUMN BY ELECTRICAL CONTRACTOR.
5. DUCT SMOKE DETECTOR AND REMOTE TEST STATION ARE PROVIDED AND INSTALLED BY ELECTRICAL CONTRACTOR. CONNECT DEVICE TO EXISTING FA CIRCUIT. COORDINATE LOCATION OF DETECTOR WITH MECHANICAL CONTRACTOR.
6. FIRE ALARM RELAY MODULES FOR AC-120 AND HRU-120 SHUTDOWN. CONNECT DEVICES TO EXISTING FIRE ALARM SYSTEM. MECHANICAL UNIT CONTROL WIRING TO DEVICE BY MECHANICAL CONTRACTOR.

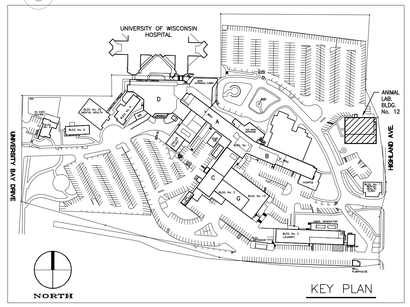

KEY PLAN

FINAL CONSTRUCTION DOCUMENTS

Revisions:	Date

CONSULTANTS:

Henneman Engineering Inc.
Madison:
1232 Fourier Drive, Suite 101 T 608.833.7000
Madison, Wisconsin 53717-1960 F 608.833.6996
Email: info@henneman.com
Website: http://www.henneman.com
JOB NO. 11-7256
© 2005 Henneman Engineering Inc. / IL reg. #184-000245 (001-013372) (062-036272)

PROJECT LEADER:

CHEQUAMEGON BAY ENGINEERING, INC.
CBE 3002-2013

ASHLAND, WI
211 6TH STREET WEST
ASHLAND, WI. 54806
PHONE: (715) 682-6004
FAX: (715) 682-6025

MILWAUKEE, WI
1109 N. MAYFAIR RD., SUITE 208
MILWAUKEE, WI. 53226
PHONE: (414) 258-6004
FAX: (414) 258-6154

Drawing Title: ELECTRICAL ROOF PLAN - NEW WORK	Project Title: UPGRADE BUILDING 12 HEATING + VENTILATION PROJECT	Project Number: 607-11-101	Office of Facilities Management
Approved: Project Director	Location: Madison, Wisconsin 53705	Building Number: 12	
	Date: February 24, 2012 / Checked By: HEI / Drawn By: HEI	Drawing Number: E102	Department of Veterans Affairs

VA FORM 08-6231, OCT 1978

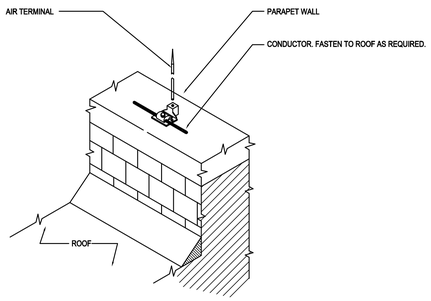

4 TYPICAL LIGHTNING PROTECTION ON PARAPET WALL

NO SCALE 26 41 13

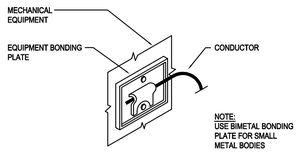

EQUIPMENT

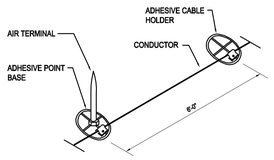

FLAT ROOF

3 LIGHTNING PROTECTION BONDING

NO SCALE 26 41 13

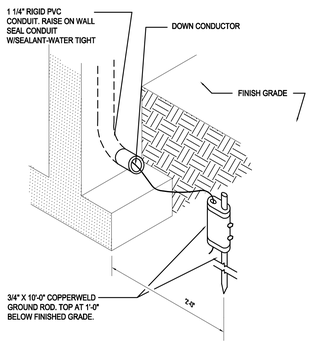

2 LIGHTNING PROTECTION GROUND ROD DETAIL

NO SCALE 26 41 13

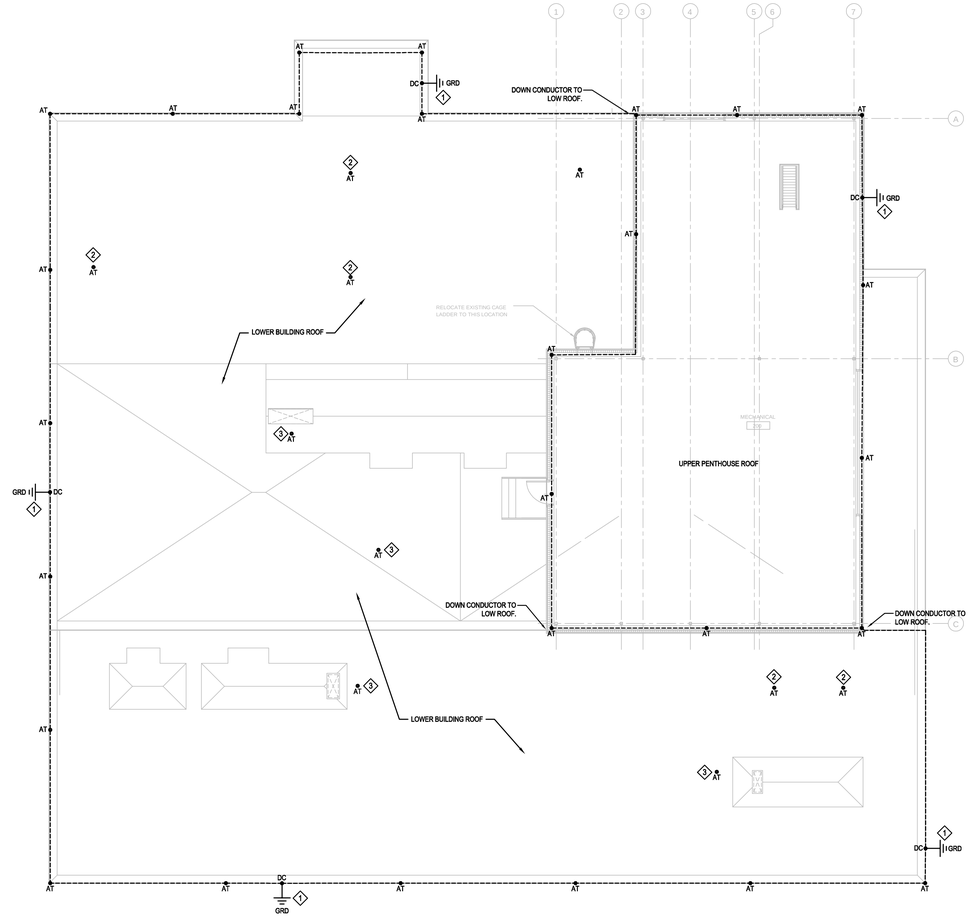

1 ELECTRICAL ROOF PLAN - NEW WORK

SCALE: 1/8" = 1'-0"

12" 0 1' 5' 10' 20'

GENERAL NEW WORK NOTES (SHEET E102.1):

1. LIGHTNING PROTECTION SHOWN IS FOR SCHEMATIC INTENT. ELECTRICAL CONTRACTOR SHALL UTILIZE A CERTIFIED LIGHTNING PROTECTION DESIGNER/INSTALLER TO PROVIDE COMPLETE SYSTEM DESIGN MEETING THE STANDARDS OF NFPA 780 AND UL.

KEYED NEW WORK NOTES (SHEET E102.1):

1. COORDINATE LOCATION OF DOWN CONDUCTOR WITH EXTERIOR WINDOWS, DOORS, LOUVERS, ETC. PROTECT CONDUCTOR FROM FINISHED GRADE TO A HEIGHT OF 10 FEET WITH RIGID PVC CONDUIT.
2. LOCATE AIR TERMINAL ON ROOF TOP MECHANICAL EQUIPMENT.
3. LOCATE AIR TERMINAL ON ROOF TOP DUCTWORK.

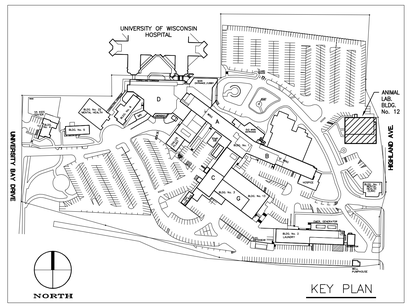

KEY PLAN

FINAL CONSTRUCTION DOCUMENTS

Revisions:	Date

CONSULTANTS:

Henneman Engineering Inc.
Madison:
1232 Fourier Drive, Suite 101
Madison, Wisconsin 53717-1960
T 608.833.7000
F 608.833.6996
Email: info@henneman.com
Website: http://www.henneman.com
JOB NO. 11-7256
© 2005 Henneman Engineering Inc. / IL reg. #184-000245 (051-053372) (062-036372)

PROJECT LEADER:

CHEQUAMEGON BAY ENGINEERING, INC.
CBE 2002-2011
ASHLAND, WI
211 6TH STREET WEST
ASHLAND, WI. 54806
PHONE: (715) 682-6004
FAX: (715) 682-6025
MILWAUKEE, WI
1109 N. MAYFAIR RD., SUITE 208
MILWAUKEE, WI. 53226
PHONE: (414) 258-6004
FAX: (414) 258-6154

Drawing Title: ELECTRICAL ROOF PLAN - NEW WORK	Project Title: UPGRADE BUILDING 12 HEATING + VENTILATION PROJECT		Project Number: 607-11-101
Approved: Project Director	Location: Madison, Wisconsin 53705		Building Number: 12
	Date: February 24, 2012	Checked By: HEI / Drawn By: HEI	Drawing Number: E102.1

Office of Facilities Management

Department of Veterans Affairs

VA FORM 08-6231, OCT 1978

BRANCH PANEL NAME	VOLTAGE				PHASE	WIRE	BUS SIZE	MAIN OCP				AIC RATING
RF/EPH	120/ 208				3	4	225A	MLO				22,000
200% NEUTRAL	CODE: L=LIGHTING, R=RECEPTACLES, M=MOTORS, K=KITCHEN											FLUSH MOUNTING TRIM
NEMA 1	COPPER GROUND BAR											
LOAD	CODE	POLE	BKR	CKT#	A	B	C	CKT#	BKR	POLE	CODE	LOAD
EF1-120	M	3	90	1	5,800							SF1-120
					9,391			2	110	3	M	
--	M	-	-	3		5,800						--
						9,391		4	-	-	M	
--	M	-	-	5			5,800					--
							9,391	6	-	-	M	
P-HRC	M	3	20	7	1,320							
					500			8	20	1	R	TEMP CONTROL PNL
--	M	-	-	9		1,320						SPARE
								10	20	1		
--	M	-	-	11			1,320					SPARE
								12	20	1		
SPARE		1	20	13								SPARE
								14	20	1		
SPARE		1	20	15								SPARE
								16	20	1		
SPARE		1	20	17								
								18				
SPARE		1	20	19								
								20				
SPARE		1	20	21								
								22				
				23								
								24				
				25								
								26				
				27								
								28				
				29								
								30				
3-P PROVISION		3	200	31								3-P PROVISION
								32	200	3		
--				33								--
								34				
--				35								--
								36				
3-P PROVISION		3	200	37								3-P PROVISION
								38	200	3		
--				39								--
								40				
--				41								--
								42				
17,011	PHASE A			RECEPT-VA @	per NEC		500	TCL VA				50,033
16,511	PHASE B			LIGHTS-VA @	100%		-	DEMAND VA				50,033
16,511	PHASE C			MOTOR-VA @	100%		49,533	HI-PH CONN. A				141
50,033	TCL			KITCHEN-VA @	80%		-	DEMAND A				139

BRANCH PANEL NAME	VOLTAGE				PHASE	WIRE	BUS SIZE	MAIN OCP				AIC RATING
RF/PH	120/ 208				3	4	225A	MLO				22,000
200% NEUTRAL	CODE: L=LIGHTING, R=RECEPTACLES, M=MOTORS, K=KITCHEN											FLUSH MOUNTING TRIM
NEMA 1	COPPER GROUND BAR											DOUBLE MAIN LUGS
LOAD	CODE	POLE	BKR	CKT#	A	B	C	CKT#	BKR	POLE	CODE	LOAD
EF2-120	M	3	90	1	5,800							SF2-120
					9,391			2	110	3	M	
--	M	-	-	3		5,800						--
						9,391		4	-	-	M	
--	M	-	-	5			5,800					--
							9,391	6	-	-	M	
EF-12	M	3	15	7	829							SF-13
					829			8	15	3	M	
--	M	-	-	9		829						--
						829		10	-	-	M	
--	M	-	-	11			829					--
							829	12	-	-	M	
UNIT HEATERS	M	1	20	13	500							SPARE
								14	20	1		
LIGHTING	L	1	20	15		924						SPARE
								16	20	1		
CONV. RECEPTACLES	R	1	20	17			720					SPARE
								18	20	1		
CONV. RECEPTACLES	R	1	20	19	720							SPARE
								20	20	1		
AHU LTS & RECEPTS	R	1	20	21		500						SPARE
								22	20	1		
SPARE	0	1	20	23								SPARE
								24	20	1		
SPARE		1	20	25								SPARE
								26	20	1		
SPARE		1	20	27								SPARE
								28	20	1		
SPARE		1	20	29								SPARE
								30				
3-P PROVISION		3	200	31								3-P PROVISION
								32	200	3		
--				33								--
								34				
--				35								--
								36				
3-P PROVISION		3	200	37								3-P PROVISION
								38	200	3		
--				39								--
								40				
--				41								--
								42				
18,069	PHASE A			RECEPT-VA @	per NEC		1,940	TCL VA				53,911
18,273	PHASE B			LIGHTS-VA @	100%		924	DEMAND VA				53,911
17,569	PHASE C			MOTOR-VA @	100%		51,047	HI-PH CONN. A				152
53,911	TCL			KITCHEN-VA @	80%		-	DEMAND A				150

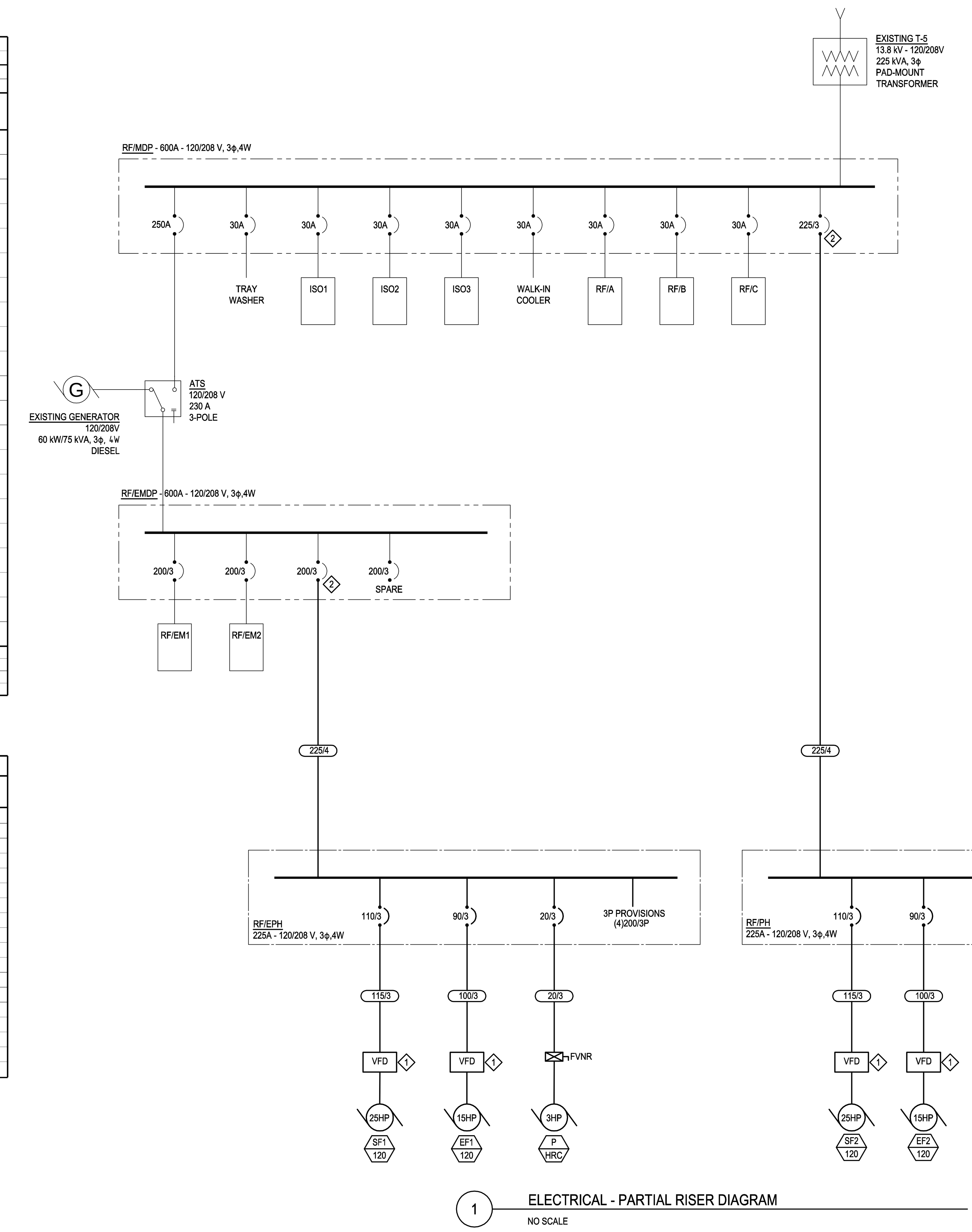

DISCONNECT SWITCH AND STARTER SCHEDULE																
MARK	LOAD	DISC SW	STAR-TER	VOLTS	PHASE	HP	VA	AMPS	SW	FUSE	NEMA SIZE	STR TYPE	NEMA ENCL.	CONTROL	CONDUIT & WIRE	PANEL SOURCE
SF1-120	AC-120 SUPPLY FAN	HC	HC	208	3	25.0	28,139	78.2	**	**	**	VFD	1	DDC	SEE ONE LINE DIAGRAM	RF/PH
SF2-120	AC-120 SUPPLY FAN	HC	HC	208	3	25.0	28,139	78.2	**	**	**	VFD	1	DDC	SEE ONE LINE DIAGRAM	RF/EPH
EF1-120	HRU-120 RETURN FAN	HC	HC	208	3	15.0	17,380	48.3	**	**	**	VFD	1	DDC	SEE ONE LINE DIAGRAM	RF/PH
EF2-120	HRU-120 RETURN FAN	HC	HC	208	3	15.0	17,380	48.3	**	**	**	VFD	1	DDC	SEE ONE LINE DIAGRAM	RF/EPH
EF-6	EXHAUST FAN	EC	-	120	1	0.3	696	5.8	30.0	9.0	1.0	NONE	1	NONE	3#12, 1#12 GND, 3/4" C.	EXIST
EF-7	EXHAUST FAN	EC	-	120	1	0.3	696	5.8	30.0	9.0	1.0	NONE	1	NONE	3#12, 1#12 GND, 3/4" C.	EXIST
EF-8	EXHAUST FAN	EC	-	120	1	0.3	864	7.2	30.0	10.0	1.0	EXIST	1	EXISTING SW.	3#12, 1#12 GND, 3/4" C.	EXIST
EF-12	EXHAUST FAN	EC	EC	208	3	1.5	2,483	6.9	30.0	10.0	1.0	FVNR	1	DDC	SEE ONE LINE DIAGRAM	RF/PH
SF-13	EXHAUST FAN	EC	EC	208	3	1.5	2,483	6.9	30.0	10.0	1.0	FVNR	1	DDC	SEE ONE LINE DIAGRAM	RF/PH
UH-1	UNIT HEATER	ED	EC	120	1	0.3	696	5.8	30.0	9.0	1.0	RIB	1	SEE NOTE 1	3#12, 1#12 GND, 3/4" C.	RF/PH
UH-2	UNIT HEATER	EC	EC	120	1	0.3	696	5.8	30.0	9.0	1.0	RIB	1	SEE NOTE 1	3#12, 1#12 GND, 3/4" C.	RF/PH
P-HRC	HEAT RECOVERY PUMP	EC	EC	208	3	3.0	3,958	11.0	30.0	17.5	1.0	FVNR	1	DDC	SEE ONE LINE DIAGRAM	RF/EPH
P-HW	HOT WATER PUMP	EC	EC	208	3	5.0	6,297	17.5	30.0	25.0	1.0	FVNR	1	DDC	3#10, 1#10 GND, 3/4" C.	RF/EPH

16150

*ELECTRICAL CONTRACTOR IS RESPONSIBLE TO COORDINATE WITH CONTRACTOR SUPPLYING EQUIPMENT PRIOR TO ALL TRADES ORDERING EQUIPMENT TO ENSURE THE PROPER SELECTION AND COST IMPLICATIONS OF EQUIPMENT SELECTION. COSTS INCURRED DUE TO CHANGES SHALL BE DEFERRED TO THE TRADE SUPPLYING THE EQUIPMENT.

**CONSULT VFD SUPPLIER FOR PROPER SWITCH/FUSE SIZING.

VFD=VARIABLE SPEED DRIVE , MMS=MANUAL MOTOR STARTER, FVNR=FULL VOLTAGE NON REVERSING, HOA=HAND-OFF-AUTO, RIB=CONTROL RELAY

EC=ELECTRICAL CONTRACTOR, HC=HEATING CONTRACTOR, ES=ELEVATOR SUPPLIER

NOTE 1 - PROVIDE CONTROL RELAY ON LOAD SIDE OF DISCONNECT SWITCH. MOUNT RELAY TO JUNCTION BOX. COORDINATE COIL VOLTAGE REQUIREMENTS WITH MECHANICAL CONTRACTOR.

LIGHTING FIXTURE SCHEDULE										
MARK	DESCRIPTION	HOUSING	VOLT	LAMP(S)	LAMP TYPE	TYPE	MOUNTING	FIXTURE BRAND	CATALOG NUMBER	NOTES
ELU	EMERGENCY BATTERY UNIT	-	120	2-9W 6V	-	SURFACE	WALL / CEILING	LITHONIA SURE-LITES EMERGI-LITE	ELM618 N SD EQUAL EQUAL	TWO HEADS, ADJUSTABLE, SELF-DIAGNOSTICS
F2	WALLPAK	TEMPERED GLASS	120	2-42W	TRT SP 35K	SURFACE	WALL	LITHONIA COOPER DAYBRITE	WST 2/42TRT FT 120 PE DDBT EQUAL EQUAL	WITH INTEGRAL PHOTOCELL; BALLAST RATED TO -20F
F1	4 FT INDUSTRIAL	NONE	120	2-F32W	T8 SP 35K	SURFACE	CEILING	LITHONIA COOPER DAYBRITE	L 2 32 GEB10IS IC-232-TEB81 EQUAL	SOLID REFLECTOR

KEYED NEW WORK NOTES (SHEET E300):

1. VFD FURNISHED AND INSTALLED BY DIV. 23 MECHANICAL CONTRACTOR. WIRED BY DIV. 26 ELECTRICAL CONTRACTOR.
2. CONNECT NEW FEEDER TO EXISTING SPARE BREAKER IN PANELBOARD.

FEEDER SCHEDULE - 600 V				
MARK (XXX/X)	PHASE CONDUCTORS	NEUTRAL CONDUCTORS	GROUND CONDUCTORS	SETS & SIZE CONDUIT
20/3	(3) #12	0	1 #12	(1) 3/4"
35/3	(3) #10	0	1 #10	(1) 3/4"
100/3	(3) #3	0	1 #8	(1) 1-1/4"
115/3	(3) #2	0	1 #6	(1) 1-1/4"
225/4	(3) #4/0	(1) #4/0	1 #4	(1) 2-1/2"

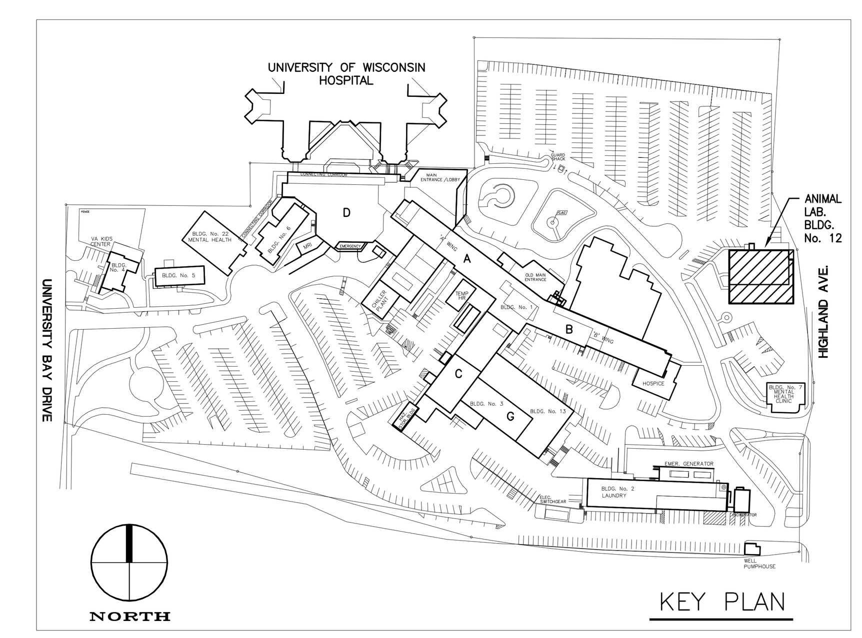

FINAL CONSTRUCTION DOCUMENTS

Revisions: | Date

CONSULTANTS:

Henneman Engineering Inc.
Madison:
1232 Fourier Drive, Suite 101 T 608.833.7000
Madison, Wisconsin 53717-1960 F 608.833.6996
Email: info@henneman.com
Website: http://www.henneman.com
JOB NO. 11-7256

© 2005 Henneman Engineering Inc. / IL reg. #184-000245 (001-013372) (062-036272)

PROJECT LEADER:

CHEQUAMEGON BAY ENGINEERING, INC.
ASHLAND, WI
211 6TH STREET WEST
ASHLAND, WI, 54806
PHONE: (715) 682-6004
FAX: (715) 682-6025
MILWAUKEE, WI
1109 N. MAYFAIR RD.,
SUITE 208
MILWAUKEE, WI, 53226
PHONE: (414) 258-6004
FAX: (414) 258-6154

© CBE 2002-2011

Drawing Title: ELECTRICAL ONE-LINE DIAGRAMS AND SCHEDULES

Approved: Project Director

Project Title: UPGRADE BUILDING 12 HEATING + VENTILATION PROJECT

Location: Madison, Wisconsin 53705

Date: February 24, 2012 | Checked By: HEI | Drawn By: HEI

Project Number: 607-11-101

Building Number: 12

Drawing Number: E300

Office of Facilities Management

Department of Veterans Affairs

VA FORM 08-6231, OCT 1978