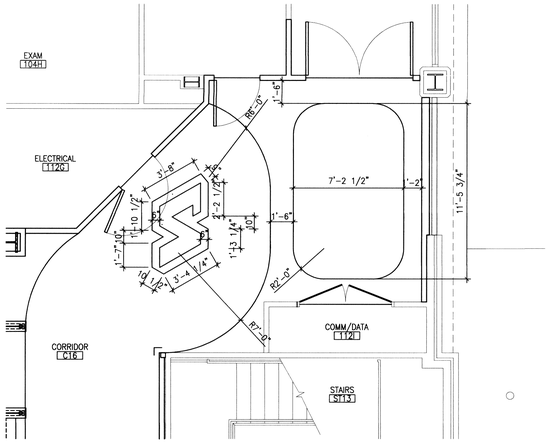

2 CORRIDOR C16 – ENLARGED FLOOR FINISH PLAN
SCALE: 1/4" = 1'-0"

0 2' 4' 8'

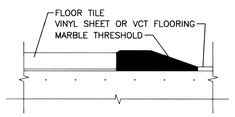

3 INTERIOR DETAIL – FLOOR TRANSITION
NTS

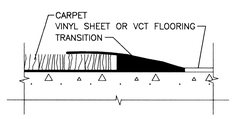

4 INTERIOR DETAIL – FLOOR TRANSITION
NTS

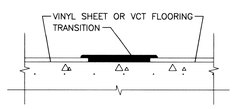

5 INTERIOR DETAIL – FLOOR TRANSITION
NTS

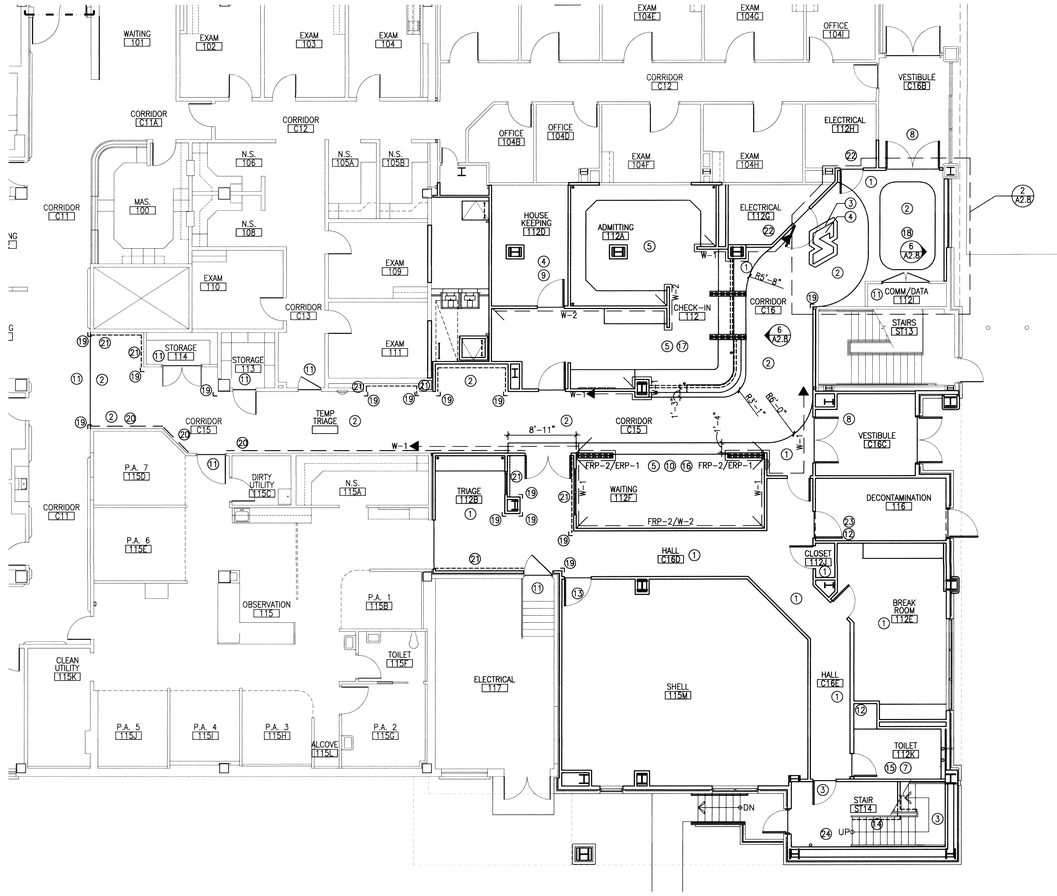

1 BUILDING 85 – FIRST FLOOR FINISH PLAN
SCALE: 1/8" = 1'-0"

PLAN NORTH

0 4' 8' 16'

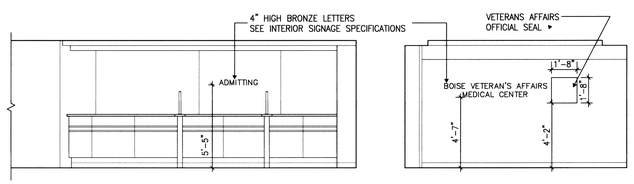

6 INTERIOR SIGNAGE
SCALE: 1/4" = 1'-0"

GENERAL NOTES

1. ALL LAMINATE, QUARTZ, AND SOLID SURFACE BACKSPLASHES TO MATCH ADJACENT COUNTERTOP. ALL COUNTERTOPS TO HAVE 1-1/2" SQUARE SELF EDGE.
2. INTERIOR OF ALL MILLWORK TO BE ALMOND MELAMINE.
3. PROVIDE APPROPRIATE FLOOR TRANSITION PIECES WHERE FLOORING MATERIALS CHANGE. VERTICAL CHANGE SHOULD NOT EXCEED 1/4" HIGH. ALL NECESSARY TRANSITIONS BETWEEN CARPET AND SHEET GOODS TO BE JOHNSONITE, CINNAMON. SEE TRANSITION DETAILS ON SHEET A2.8.
4. CONTINUE NEW FINISHES AS SPECIFIED FOR TEMP TRIAGE CORRIDOR AS BID ALTERNATE (DEDUCT ALTERNATE #2).
5. REFERENCE SPECIFICATION SECTION 09 06 00 SCHEDULE FOR FINISHES FOR FINISH SPECIFICATIONS AND LOCATIONS.
6. ALL VINYL SHEET FLOORING TO BE INSTALLED WITH GRAIN/PATTERN IN SAME DIRECTION IF NO DESIGNATION OF FLOOR MATERIAL CHANGE IS SHOWN ON FLOOR FINISH PLAN. DIRECTION TO BE MOST COST EFFECTIVE LAYOUT
7. REFERENCE SHEET A2.9 FOR WALL PROTECTION DETAILS.
8. INFILL WITH MATCHING ADJACENT FINISHES WHERE WINDOWS AND OR DOORS ARE BEING REMOVED IN EXISTING WALLS/SPACES. SEE ARCHITECTURAL DRAWINGS FOR LOCATIONS. COORDINATE WITH VA INTERIOR DESIGNER FOR SPECIFICATIONS OF EXISTING FINISHES.
9. WORK PERFORMED IN OCCUPIED PORTIONS OF THE BUILDING TO BE SCHEDULED AND COORDINATED WITH VA COTR. IT SHALL BE ASSUMED THAT THIS WORK IS TO BE PERFORMED DURING NON PEAK TIMES BETWEEN 6PM AND 7AM UNLESS OTHERWISE APPROVED BY THE VA COTR.
10. SEE SPECIFICATIONS FOR INTERIOR SIGNAGE SPECIFICATIONS AND LOCATIONS.

SHEET NOTES

1. VINYL SHEET FLOORING VSF-1
2. VINYL SHEET FLOORING VSF-2
3. VINYL SHEET FLOORING VSF-3
4. VINYL SHEET FLOORING VSF-4
5. CARPET FLOORING CP-1
6. NOT USED.
7. CERAMIC TILE FLOORING CT-1
8. WALK OFF CARPET FLOORING CP-2
9. FIBERGLASS REINFORCED PANELS FRP-1 ON WALL SURFACES FROM FINISHED FLOOR TO 48" ABOVE FINISHED FLOOR WITH TOP CAP PEW-2 AND MATCHING TRIM PIECES TO FINISH.
10. CEILING SOFFIT PAINTED P-5
11. EXISTING FINISH TO REMAIN.
12. CERAMIC TILE CT-1 ON WALL SURFACES FROM FINISHED FLOOR TO FINISHED CEILING.
13. NO FINISHES.
14. RUBBER STAIR TREADS WITH INTEGRAL RISER RST-1
15. CERAMIC TILE CT-1 ON WALL SURFACES FROM FINISHED FLOOR TO 51" ABOVE FINISHED FLOOR UNLESS OTHERWISE NOTED. PROVIDE MATCHING TRIM PIECES TO FINISH.
16. PLASTIC LAMINATE FRP-2 ON WALL SURFACES FROM FINISH FLOOR TO 48" ABOVE FINISH FLOOR. PROVIDE CHAIR RAIL PEW-1 AT TOP EDGE UNLESS OTHERWISE NOTED.
17. UPPER CEILING SOFFIT PAINTED P-5. LOWER CEILING SOFFIT PAINTED P-1.
18. CEILING SOFFIT PAINTED P-1.
19. WALL PROETECTION: CORNERGUARD, MOUNTED ABOVE WALL BASE.
20. WALL PROTECTION: HANDRAIL, CENTER MOUNTED AT 36" ABOVE FINISHED FLOOR. CRASH RAIL, CENTER MOUNTED AT 18" ABOVE FINISHED FLOOR.
21. WALL PROTECTION: BUMPER GUARD, CENTER MOUNTED AT 36" ABOVE FINISHED FLOOR. CRASH RAIL, CENTER MOUNTED AT 18" ABOVE FINISHED FLOOR.
22. SEALED CONCRETE
23. MOSAIC CERAMIC TILE FLOORING FT-1
24. EXTEND FINISH OF STAIR ST14 FROM FIRST LEVEL TO PENTHOUSE LEVEL.

KEY

- - - - - - - - BUMPER GUARD/CRASH RAIL LOCATIONS – SHEET NOTE #21
— — — HANDRAIL/ CRASH RAIL LOCATIONS – SHEET NOTE #20
CORNERGUARD LOCATIONS – SHEET NOTE #19

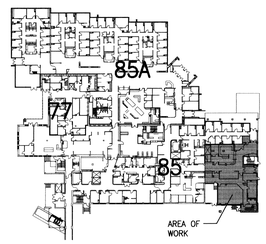

FIRST FLOOR KEY PLAN
NOT TO SCALE

PLAN NORTH

FOR CONSTRUCTION

REVISIONS	DATE

SPRAGUE SOLUTIONS
615 W. Hays Street Boise, Idaho 83702
T: 208.331.7737 F: 208.331.7797

LICENSED ARCHITECT STATE OF IDAHO

ZGA. Architects and Planners, Chartered
565 W. Myrtle Street, Suite 225 Boise, Idaho 83702-7606

CAD FILE NAME: 85I1FP
XREF FILE NAME: 85A1FL_FLOOR PLAN 531-317_XVABORD 85GRID

DRAWING TITLE: FLOOR FINISH PLAN FIRST FLOOR	PROJECT TITLE: REPLACE AND MODERNIZE SURGERY / INTENSIVE CARE UNIT			DATE: 11/01/2011
				PROJECT NO. 531-317
APPROVED: CHIEF OF FACILITY MANAGEMENT SERVICE	BUILDING NUMBER 85	CHECKED DNS	DRAWN JLB	DRAWING NO. A2.8
APPROVED: MEDICAL CENTER DIRECTOR	LOCATION VAMC BOISE, IDAHO			DWG 26 OF 188

DEPARTMENT OF VETERANS AFFAIRS

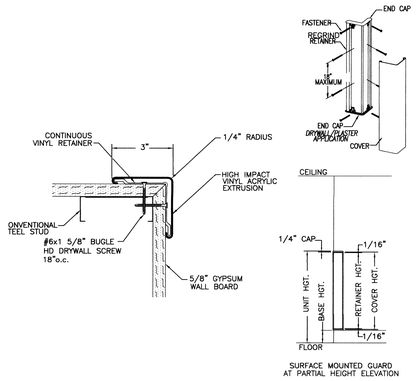

2 INTERIOR DETAIL – CORNERGUARD
SCALE: NTS

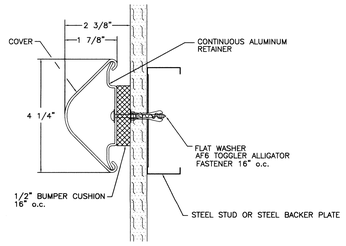

3 INTERIOR DETAIL – BUMPER RAIL
SCALE: NTS

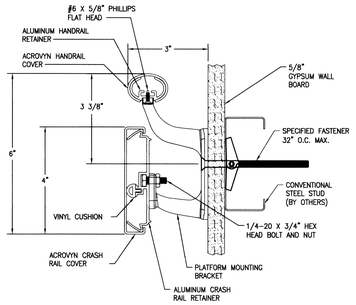

4 INTERIOR DETAIL – HANDRAIL
SCALE: NTS

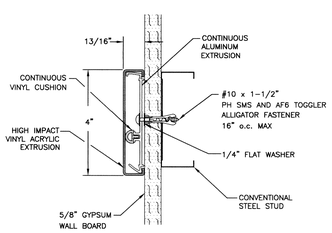

5 INTERIOR DETAIL – CRASHRAIL
SCALE: NTS

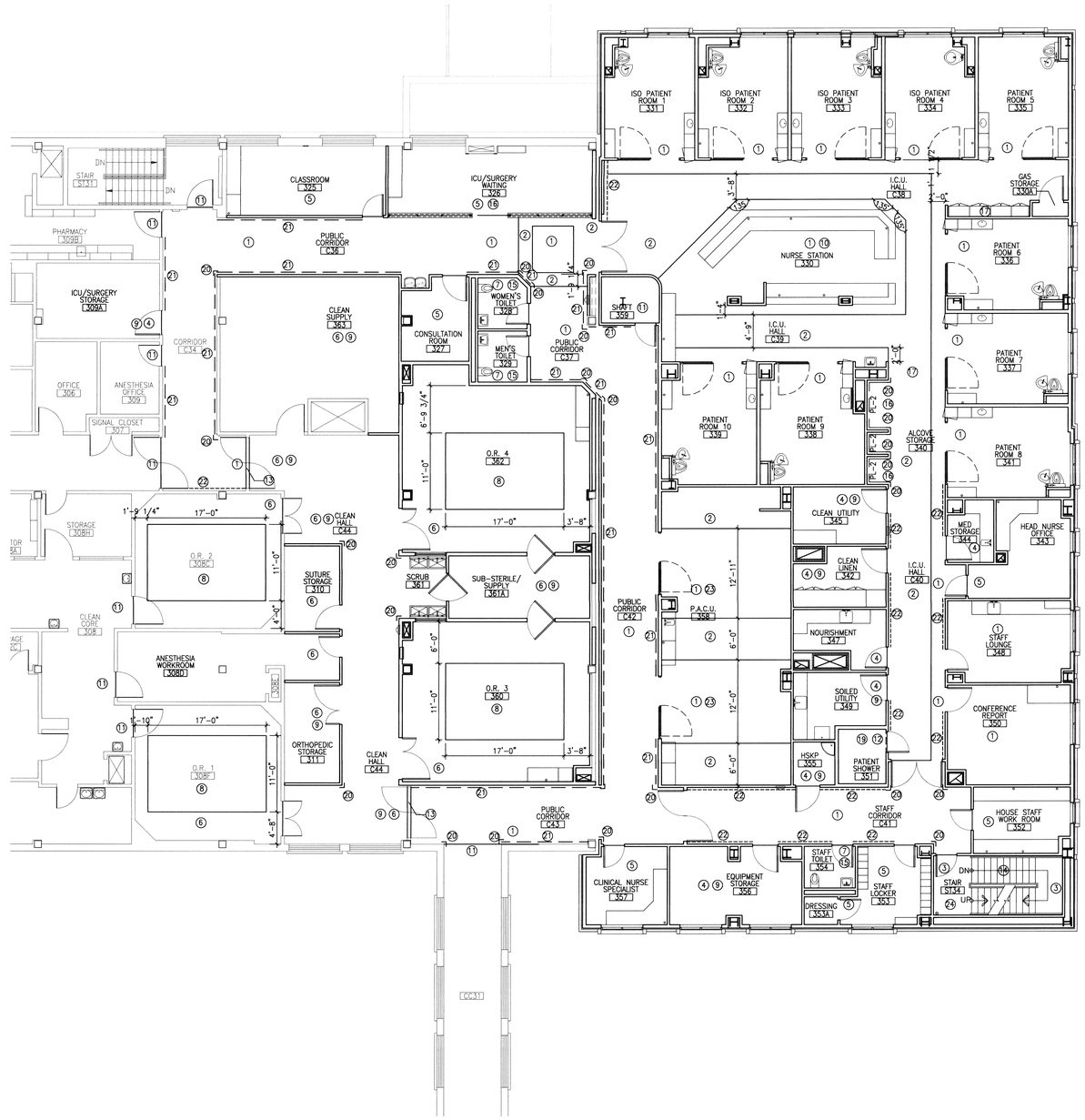

1 BUILDING 85 – THIRD FLOOR FINISH PLAN
SCALE: 1/8" = 1'-0"

PLAN NORTH

0 4' 8' 16'

GENERAL NOTES

1. ALL LAMINATE AND SOLID SURFACE BACKSPLASHES TO MATCH ADJACENT COUNTERTOP. ALL COUNTERTOPS TO HAVE 1-1/2" SQUARE SELF EDGE.
2. INTERIOR OF ALL MILLWORK TO BE ALMOND MELAMINE
3. PROVIDE APPROPRIATE FLOOR TRANSITION PIECES WHERE FLOORING MATERIALS CHANGE. VERTICAL CHANGE SHOULD NOT EXCEED 1/4" HIGH. ALL NECESSARY TRANSITIONS BETWEEN CARPET AND SHEET GOODS TO BE JOHNSONITE, CINNAMON.
4. PROVIDE NEW FINISHES AS SPECIFIED FOR EXISTING OR SUITE (DEDUCT ALTERNATE #5) AND P.A.C.U. (DEDUCT ALTERNATE #7) AS BID ALTERNATE. COORDINATE WITH ARCHITECTURAL DRAWINGS AND SPECIFICATIONS FOR EXTENT OF WORK.
5. REFERENCE SPECIFICATION SECTION 09 06 00 SCHEDULE FOR FINISHES FOR FINISH SPECIFICATION AND LOCATIONS.
6. ALL VINYL SHEET FLOORING TO BE INSTALLED WITH GRAIN/PATTERN IN SAME DIRECTION IF NO DESIGNATION OF FLOOR MATERIAL CHANGE IS SHOWN ON FLOOR FINISH PLAN. DIRECTION TO BE MOST COST EFFECTIVE LAYOUT.
7. REFERENCE SHEET A2.9 FOR WALL PROTECTION DETAILS.
8. INFILL WITH MATCHING ADJACENT FINISHES WHERE WINDOWS AND/OR DOORS ARE BEING REMOVED IN EXISTING WALL/SPACES. SEE ARCHITECTURAL DRAWINGS FOR LOCATIONS. COORDINATE WITH VA INTERIOR DESIGNER FOR SPECIFICATIONS OF EXISTING FINISHES.
9. WORK PERFORMED IN OCCUPIED PORTIONS OF THE BUILDING TO BE SCHEDULED AND COORDINATED WITH VA COTR. IT SHALL BE ASSUMED THAT THIS WORK IS TO BE PERFORMED DURING NON PEAK TIMES BETWEEN 6PM AND 7AM UNLESS OTHERWISE APPROVED BY VA COTR.
10. SEE SPECIFICATIONS FOR INTERIOR SIGNAGE SPECIFICATIONS AND LOCATIONS.

SHEET NOTES

1. VINYL SHEET FLOORING VSF-1
2. VINYL SHEET FLOORING VSF-2
3. VINYL SHEET FLOORING VSF-3
4. VINYL SHEET FLOORING VSF-4
5. CARPET FLOORING CP-1
6. RUBBER SHEET FLOORING SRF-1
7. CERAMIC TILE FLOORINGCT-1
8. RUBBER SHEET FLOORING SRF-2
9. FIBERGLASS REINFORCED PANELS FRP-1 ON WALL SURFACES FROM FINISHED FLOOR TO 48" ABOVE FINISHED FLOOR WITH TOP CAP PEW-2 AND MATCHING TRIM PIECES TO FINISH.
10. VERTICAL SURFACE (PUBLIC SIDE ONLY) PAINTED P-5. HORIZONTAL AND VERTICAL RETURN TO SKYLIGHT PAINTED P-1.
11. EXISTING FINISH TO REMAIN.
12. CERAMIC TILE CT-1 ON WALL SURFACES FROM FINISHED FLOOR TO FINISHED CEILING.
13. RED LINE FOR SURGERY ENTRANCE: VINYL SHEET FLOORING VSF-5
14. RUBBER STAIR TREADS WITH INTEGRAL RISER RST-1
15. CERAMIC TILE CT-1 ON WALL SURFACES FROM FINISH FLOOR TO 51" ABOVE FINISH FLOOR UNLESS OTHERWISE NOTED. PROVIDE MATCHING TRIM PIECES TO FINISH.
16. PLASTIC LAMINATE FRP-2 ON WALL SURFACES FROM FINISH FLOOR TO 48" ABOVE FINISH FLOOR. PROVIDE CHAIR RAIL PEW-1 AT TOP EDGE UNLESS NOTED OTHERWISE.
17. CEILING SOFFIT PAINTED P-1.
18. VINYL SHEET FLOORING VSF-4
19. MOSAIC CERAMIC TILE FLOORING FT-1
20. WALL PROTECTION: CORNER GUARD, MOUNTED ABOVE WALL BASE.
21. WALL PROTECTION: HANDRAIL, CENTER MOUNTED AT 36" ABOVE FINISHED FLOOR. CRASH RAIL, CENTER MOUNTED AT 18" ABOVE FINISHED FLOOR.
22. WALL PROTECTION: BUMPER GUARD, CENTER MOUNTED AT 36" ABOVE FINISHED FLOOR. CRASH RAIL, CENTER MOUNTED AT 18" ABOVE FINISHED FLOOR.
23. PLASTIC LAMINATE FRP-2 ON SOUTH WALL FROM FINISHED FLOOR TO 60" ABOVE FINISHED FLOOR. PROVIDE CHAIR RAIL PEW-2 AT TOP EDGE UNLESS OTHERWISE NOTED.
24. EXTEND FINISHES OF STAIR ST34 FROM FIRST FLOOR TO PENTHOUSE LEVEL.

KEY

- BUMPER GUARD/ CRASH RAIL LOCATIONS – SHEET NOTE #22
- HANDRAIL/ CRASH RAIL LOCATIONS – SHEET NOTE #21
- CORNERGUARD LOCATIONS – SHEET NOTE #20

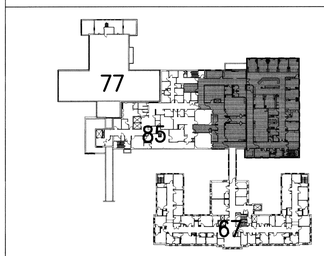

THIRD FLOOR KEY PLAN
NOT TO SCALE

PLAN NORTH

FOR CONSTRUCTION

REVISIONS	DATE

SPRAGUE SOLUTIONS

LICENSED ARCHITECT BOISE, IDAHO JOHN L. JACOBS 10-31-2011 STATE OF IDAHO

ZGA. Architects and Planners, Chartered
565 W. Myrtle Street, Suite 225 Boise, Idaho 83702-7606

CAD FILE NAME: 85I3FP
XREF FILE NAME: 85A3FL 531-317_XVABORD 85_GRID

DRAWING TITLE: FLOOR FINISH PLAN THIRD FLOOR

APPROVED: CHIEF OF FACILITY MANAGEMENT SERVICE

APPROVED: MEDICAL CENTER DIRECTOR

PROJECT TITLE: REPLACE AND MODERNIZE SURGERY / INTENSIVE CARE UNIT

BUILDING NUMBER: 85 | CHECKED: | DRAWN: JLB

LOCATION: VAMC BOISE, IDAHO

DATE: 11/01/2011

PROJECT NO. 531-317

DRAWING NO. A2.9

DWG 27 OF 188

DEPARTMENT OF VETERANS AFFAIRS

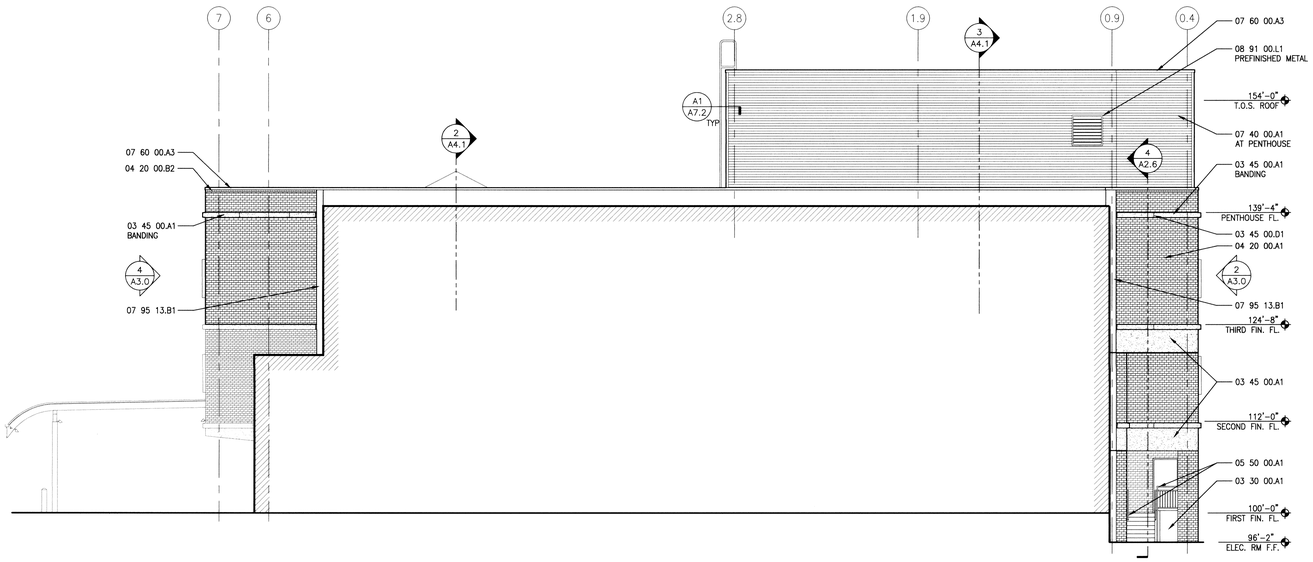

3 NORTH ELEVATION
SCALE: 1/8" = 1'-0"

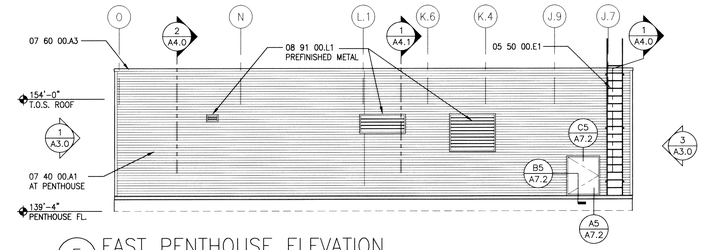

5 EAST PENTHOUSE ELEVATION
SCALE: 1/8" = 1'-0"

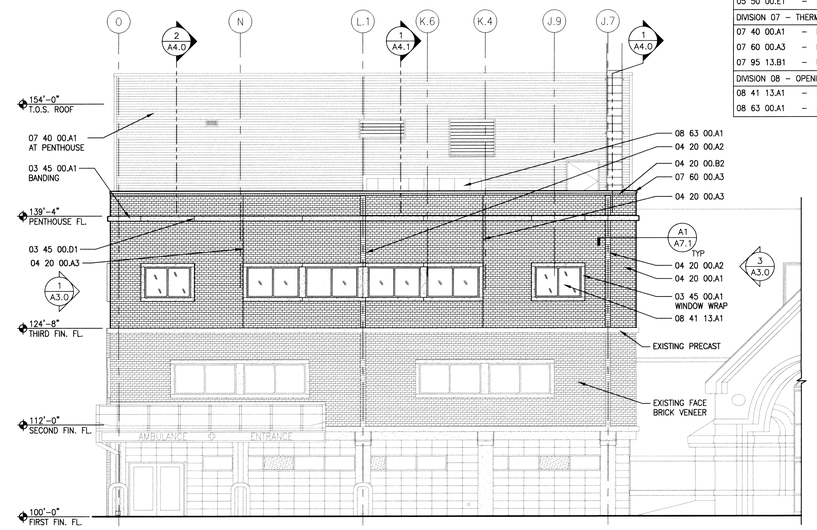

4 EAST ELEVATION
SCALE: 1/8" = 1'-0"

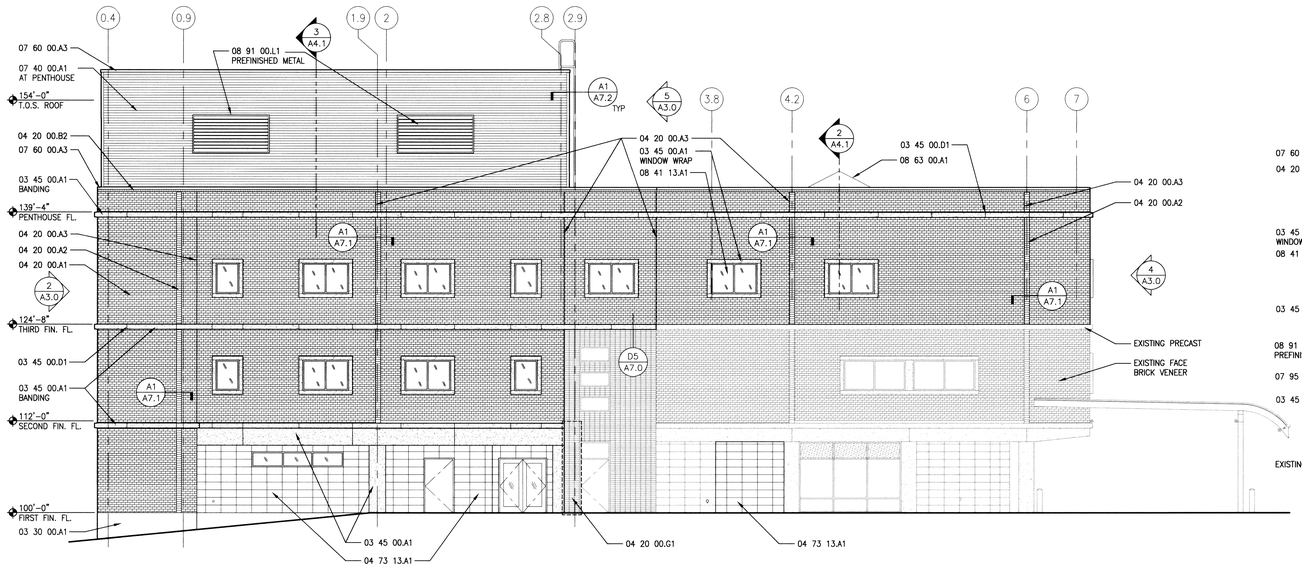

1 SOUTH ELEVATION
SCALE: 1/8" = 1'-0"

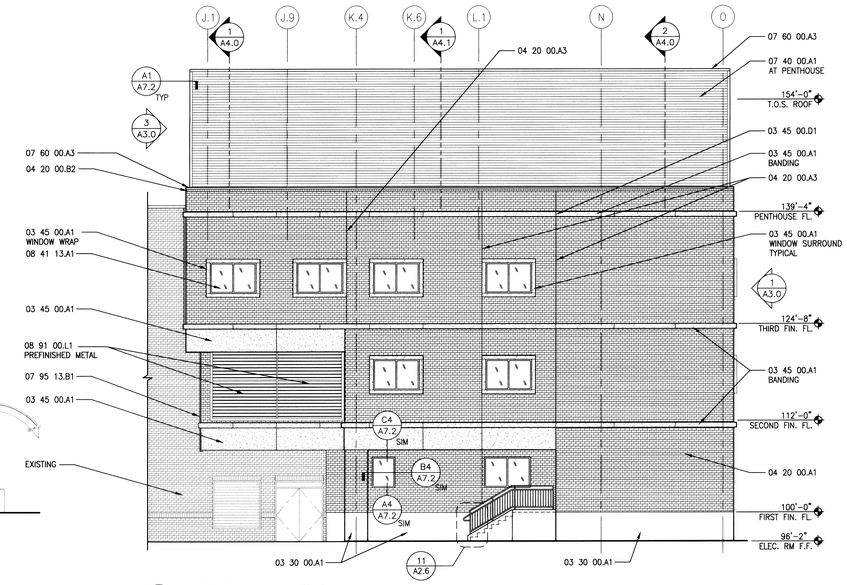

2 WEST ELEVATION
SCALE: 1/8" = 1'-0"

GENERAL SHEET NOTES

A. PRECAST PANEL CONNECTIONS SHALL BE DESIGNED BY PRECAST MANUFACTURER. NO CONNECTION SHALL BE MADE (INCLUDING BUT NOT LIMITED TO WELDS, BOLTS, SCREWS, POWDER-DRIVEN FASTENERS) TO SPECIAL MOMENT FRAME BEAMS WITHIN PROTECT ZONES AT EACH END OF BEAM. SEE DETAIL 1/S4.6 AND FRAME ELEVATIONS ON SAME SHEET FOR LOCATIONS.

REFERENCE KEYNOTES

DIVISION 03 – CONCRETE		
03 30 00.A1	–	CAST-IN-PLACE CONCRETE
03 45 00.A1	–	PRECAST CONCRETE
03 45 00.D1	–	JOINT WHERE ILLUSTRATED, TYPICAL
DIVISION 04 – MASONRY		
04 20 00.A1	–	FACE BRICK VENEER
04 20 00.A2	–	WALL RECESS, SINGLE COLUMN OF MASONRY STACKED STRETCHERS
04 20 00.A3	–	MASONRY CONTROL JOINT
04 20 00.B2	–	ROWLOCK COURSE
04 20 00.C1	–	REMOVE BRICK AS REQUIRED FOR INSTALLATION OF FOOTING SYSTEM. SALVAGE BRICK AND REINSTALL IN STACK BOND TO MATCH EXISTING CONFIGURATION
04 73 13.A1	–	MANUFACTURED STONE MASONRY VENEER
DIVISION 05 – METALS		
05 50 00.A1	–	STEEL GUARDRAIL/HANDRAIL ASSEMBLY
05 50 00.E1	–	STEEL LADDER
DIVISION 07 – THERMAL AND MOISTURE PROTECTION		
07 40 00.A1	–	PRE-FINISHED METAL WALL PANELS
07 60 00.A3	–	PREFINISHED METAL COPING
07 95 13.B1	–	EXTERIOR WALL EXPANSION JOINT COVER
DIVISION 08 – OPENINGS		
08 41 13.A1	–	ALUMINIMUM STOREFRONT SYSTEM
08 63 00.A1	–	ALUMINUM-FRAMED SKYLIGHT

REVISIONS | DATE

LICENSED ARCHITECT — STEVEN C. TURNER — STATE OF IDAHO — 10-28-11

ZGA. Architects and Planners, Chartered
565 W. Myrtle Street, Suite 225 Boise, Idaho 83702-7606

CAD FILE NAME: 531-317_A3.0.dwg
XREF FILE NAME: 85AElev.dwg, 531-317_xVAbord.dwg

DRAWING TITLE: BUILDING EXTERIOR ELEVATIONS

PROJECT TITLE: REPLACE AND MODERNIZE SURGERY / INTENSIVE CARE UNIT

DATE: 11/01/2011
PROJECT NO.: 531-317

APPROVED: CHIEF OF FACILITY MANAGEMENT SERVICE
APPROVED: MEDICAL CENTER DIRECTOR

BUILDING NUMBER: 85 | CHECKED: ST | DRAWN: SM

LOCATION: VAMC BOISE, IDAHO

DRAWING NO.: A3.0
DWG 28 OF 188

FOR CONSTRUCTION
DEPARTMENT OF VETERANS AFFAIRS

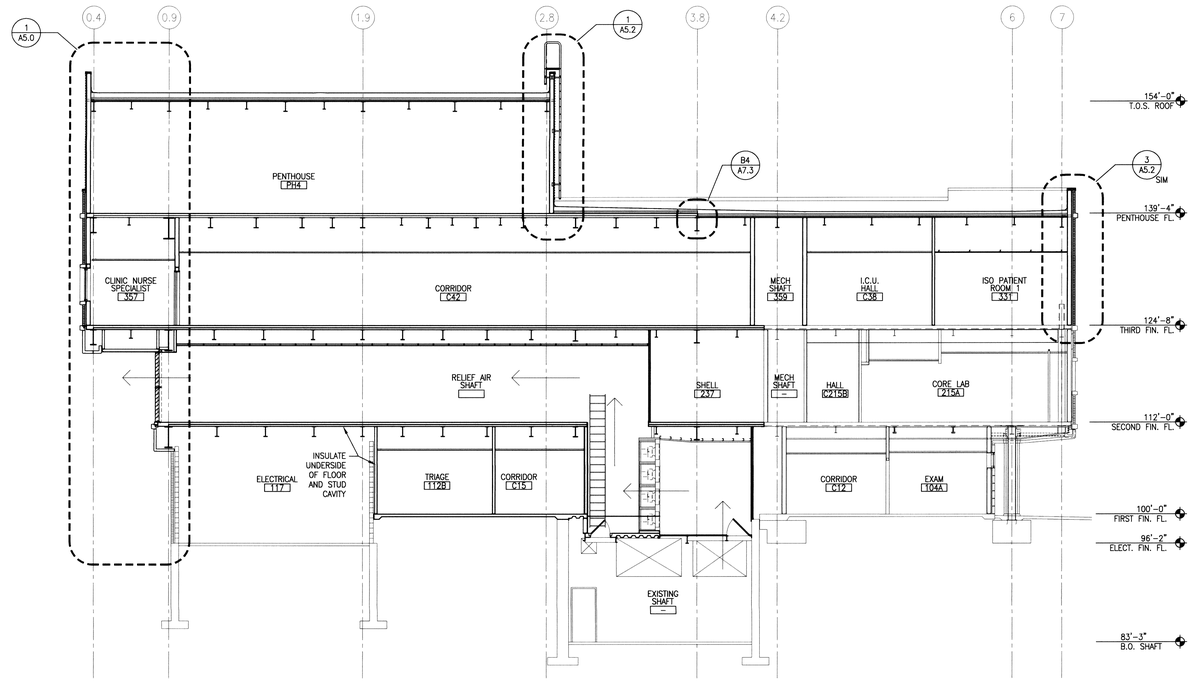

1 BUILDING 85 SECTION A
SCALE: 1/8" = 1'-0"

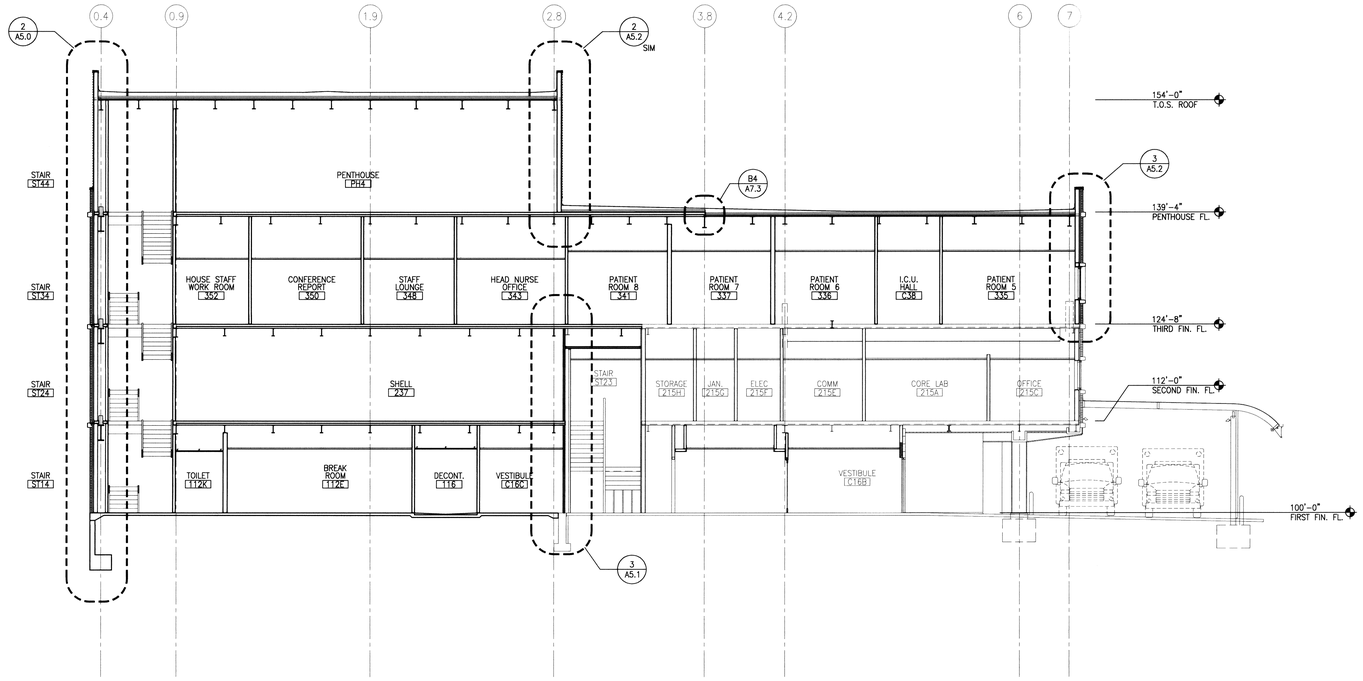

2 BUILDING 85 SECTION B
SCALE: 1/8" = 1'-0"

FOR CONSTRUCTION

REVISIONS	DATE

LICENSED ARCHITECT — STATE OF IDAHO — 98-885 — STEPHEN C. TURNER

ZSA. Architects and Planners, Chartered
565 W. Myrtle Street, Suite 225 Boise, Idaho 83702-7606

CAD FILE NAME: 531-317_A4.0-A4.1.dwg
XREF FILE NAME: 85ASD.dwg, 531-317_xVAbord.dwg

DRAWING TITLE: BUILDING SECTIONS

PROJECT TITLE: REPLACE AND MODERNIZE SURGERY / INTENSIVE CARE UNIT

DATE: 11/01/2011
PROJECT NO. 531-317

APPROVED: CHIEF OF FACILITY MANAGEMENT SERVICE
APPROVED: MEDICAL CENTER DIRECTOR

BUILDING NUMBER: 85
CHECKED: ST
DRAWN: BB
LOCATION: VAMC BOISE, IDAHO

DRAWING NO. A4.0
DWG 29 OF 188

DEPARTMENT OF VETERANS AFFAIRS

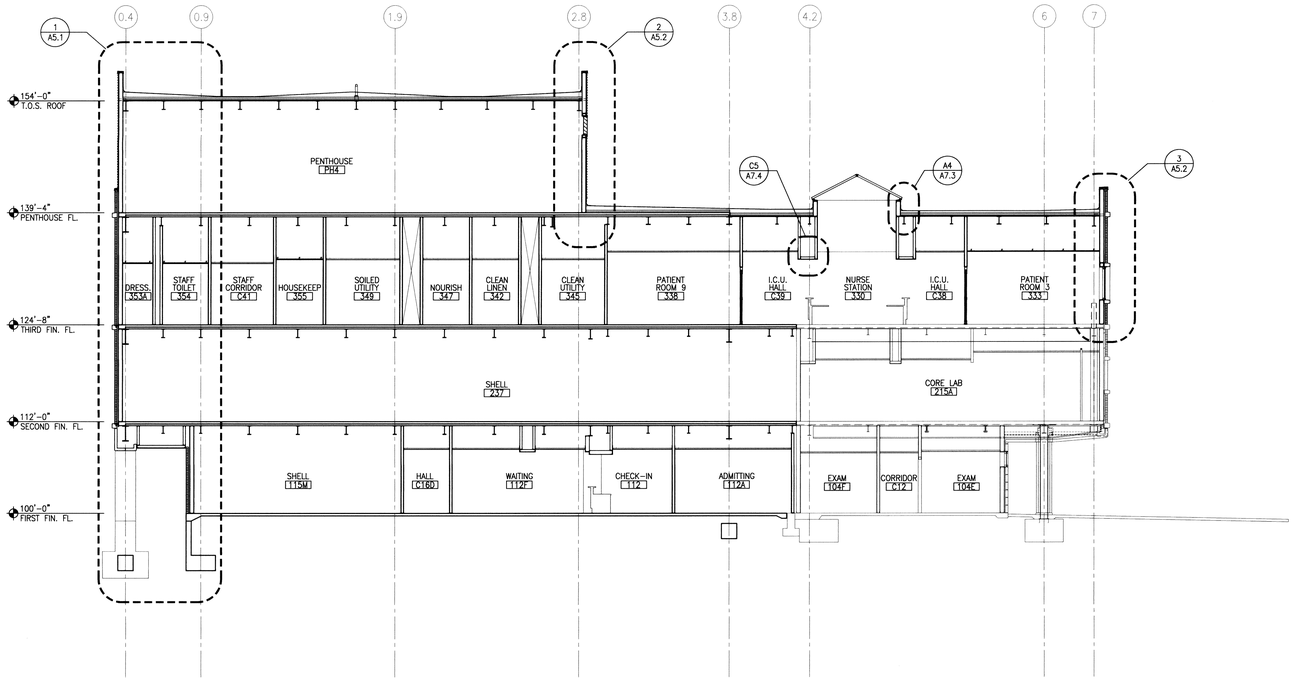

1 BUILDING 85 SECTION C
SCALE: 1/8" = 1'-0"

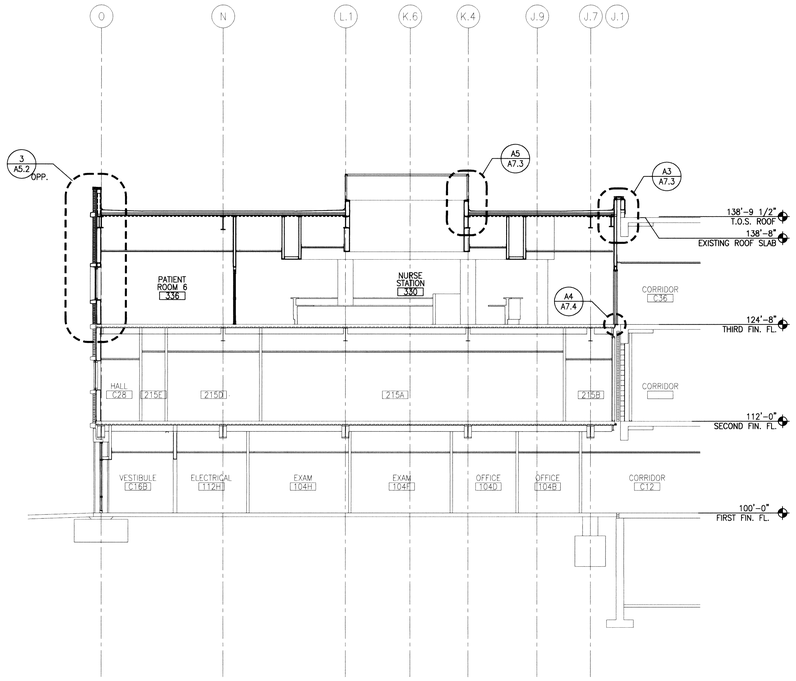

2 BUILDING 85 SECTION D
SCALE: 1/8" = 1'-0"

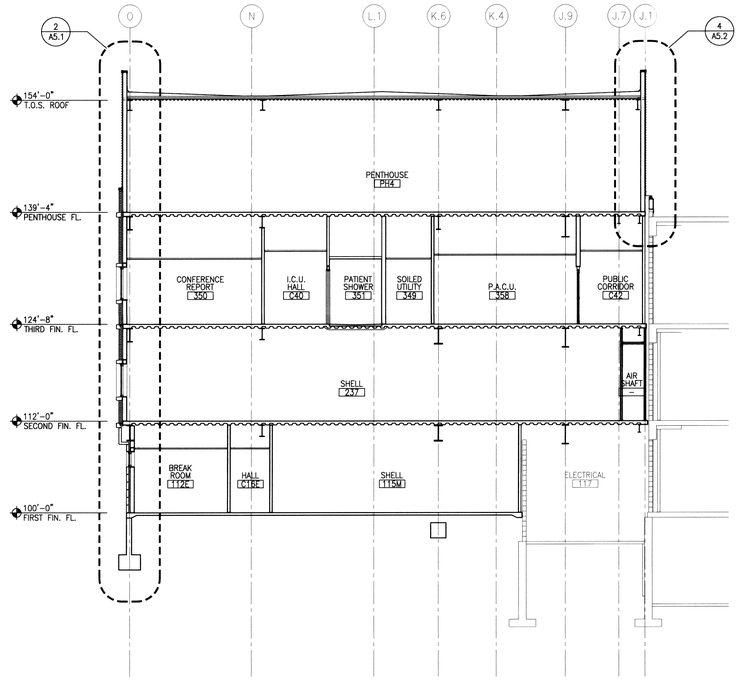

3 BUILDING 85 SECTION E
SCALE: 1/8" = 1'-0"

FOR CONSTRUCTION

REVISIONS	DATE

LICENSED ARCHITECT
AR-1885
STATE OF IDAHO
STEVEN C. TUNEY

ZGA Architects and Planners, Chartered
565 W. Myrtle Street, Suite 225 Boise, Idaho 83702-7606

CAD FILE NAME: 531-317_A4.0-A4.1.dwg
XREF FILE NAME: 85ASD.dwg 531-317_xVAbord.dwg

DRAWING TITLE: BUILDING SECTIONS	PROJECT TITLE: REPLACE AND MODERNIZE SURGERY / INTENSIVE CARE UNIT		DATE: 11/01/2011
			PROJECT NO.: 531-317
APPROVED: CHIEF OF FACILITY MANAGEMENT SERVICE	BUILDING NUMBER: 85	CHECKED: ST / DRAWN: BB	DRAWING NO.: A4.1
APPROVED: MEDICAL CENTER DIRECTOR	LOCATION: VAMC BOISE, IDAHO		DWG 30 OF 188

DEPARTMENT OF VETERANS AFFAIRS

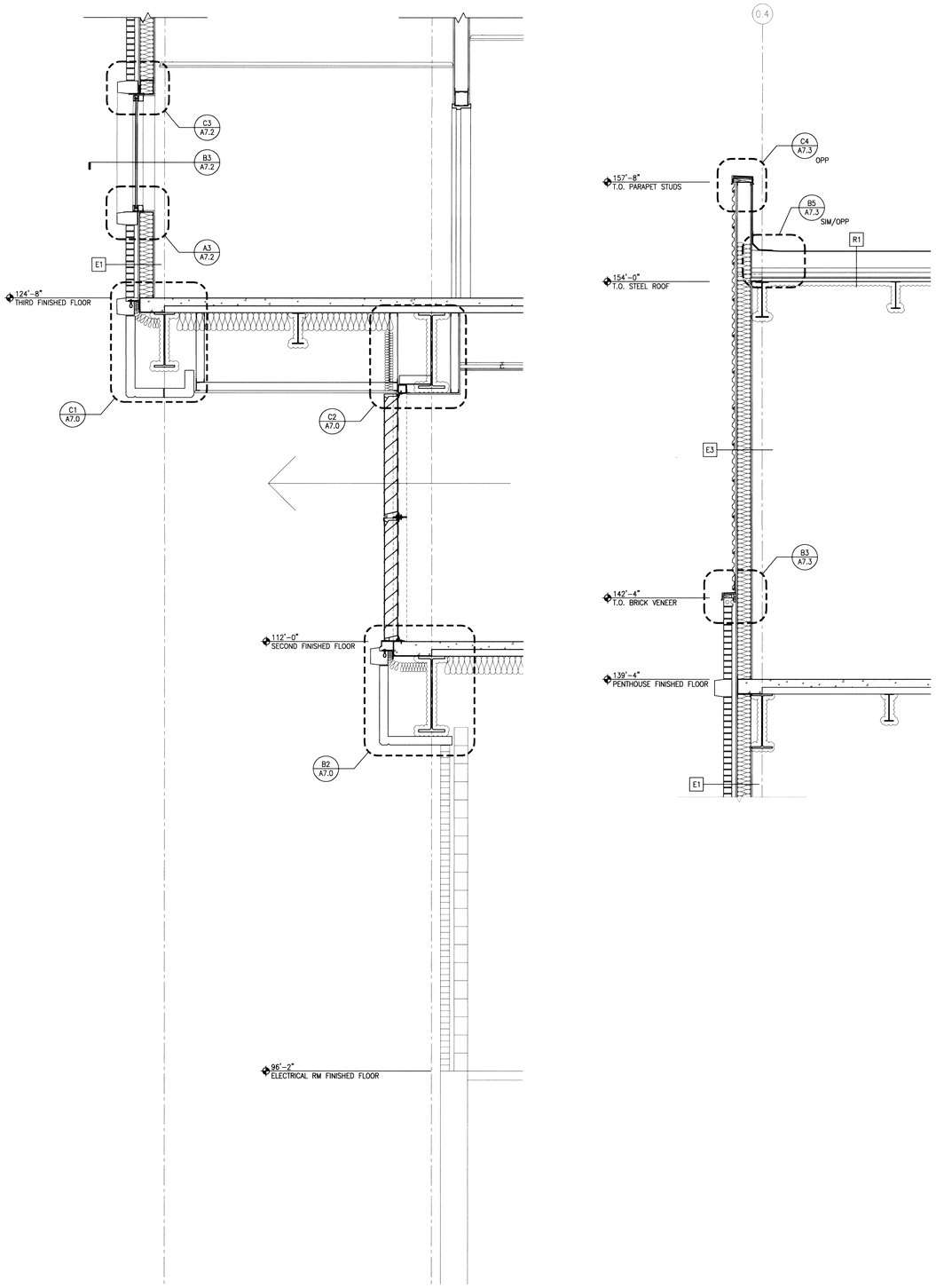

1 WALL SECTION
SCALE: 1/2" = 1'-0"

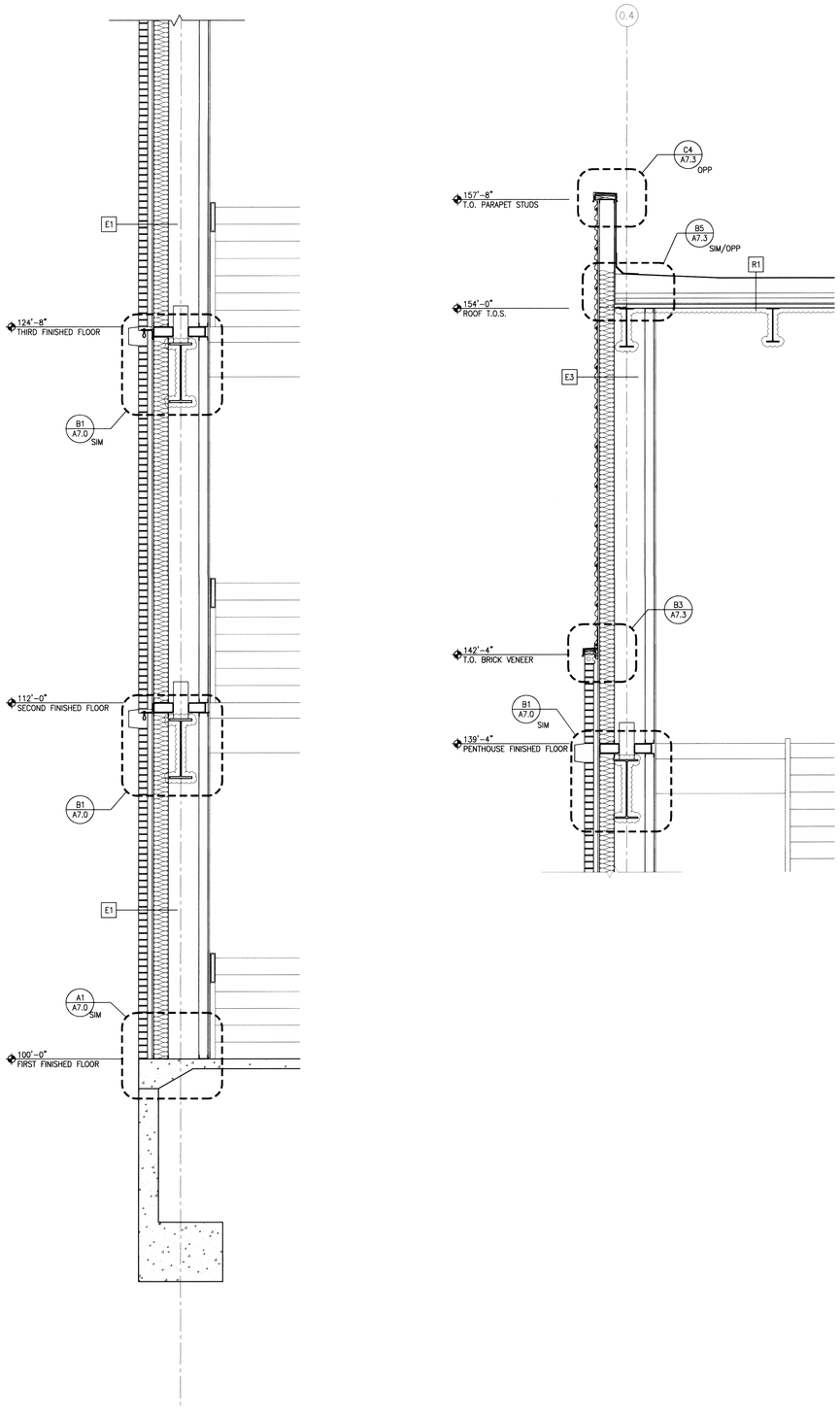

2 WALL SECTION
SCALE: 1/2" = 1'-0"

REVISIONS	DATE

CHECKED ARCHITECT BOISE, IDAHO AR-1885 STATE OF IDAHO STEVEN C. TURNER

ZGA Architects and Planners, Chartered
565 W. Myrtle Street, Suite 225 Boise, Idaho 83702-7606

CAD FILE NAME: 531-317_A5.0-A5.2.dwg
XREF FILE NAME: 85ASD.dwg 531-317_xVAbord.dwg

DRAWING TITLE: WALL SECTIONS	PROJECT TITLE: REPLACE AND MODERNIZE SURGERY / INTENSIVE CARE UNIT		DATE: 11/01/2011
			PROJECT NO.: 531-317
APPROVED: CHIEF OF FACILITY MANAGEMENT SERVICE	BUILDING NUMBER: 85	CHECKED: ST / DRAWN: BB	DRAWING NO.: A5.0
APPROVED: MEDICAL CENTER DIRECTOR	LOCATION: VAMC BOISE, IDAHO		DWG 31 OF 188

FOR CONSTRUCTION

DEPARTMENT OF VETERANS AFFAIRS

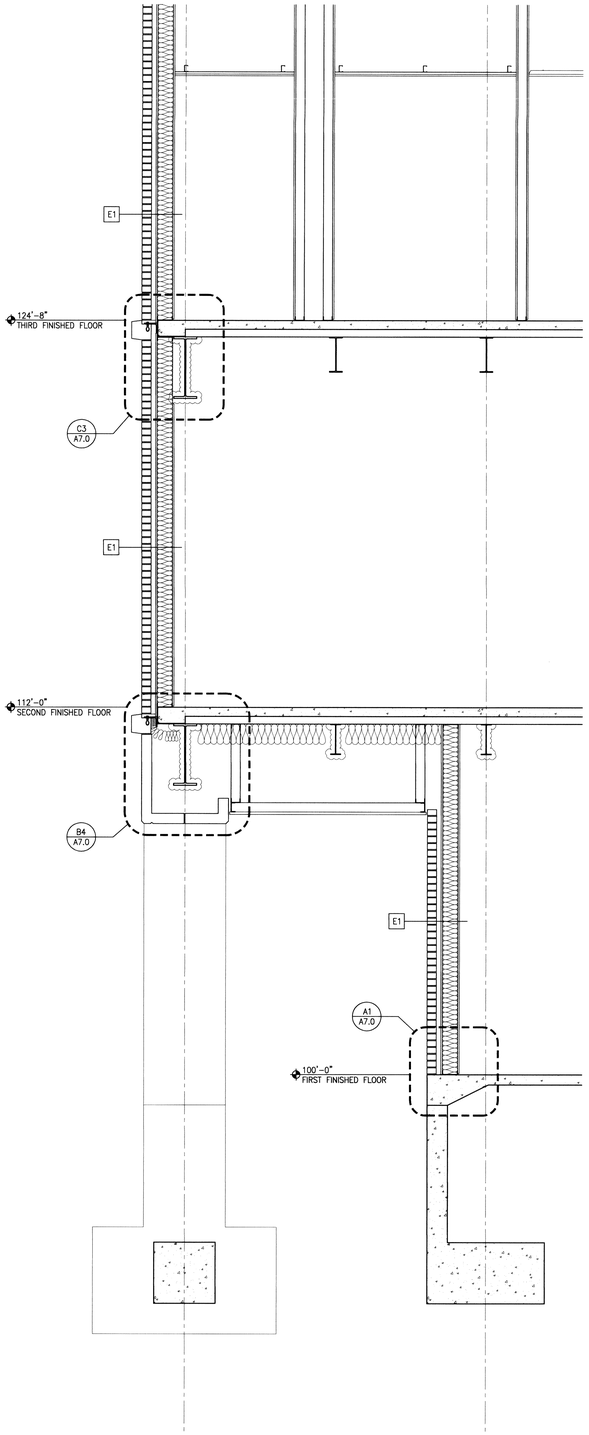

1 WALL SECTION
SCALE: 1/2" = 1'-0"

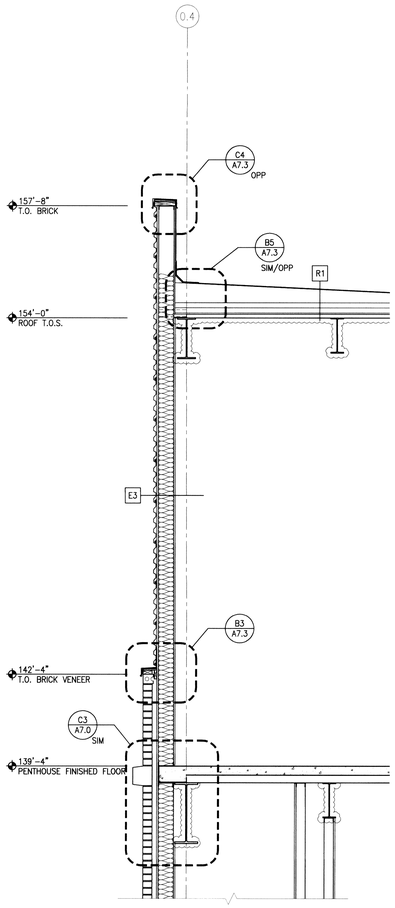

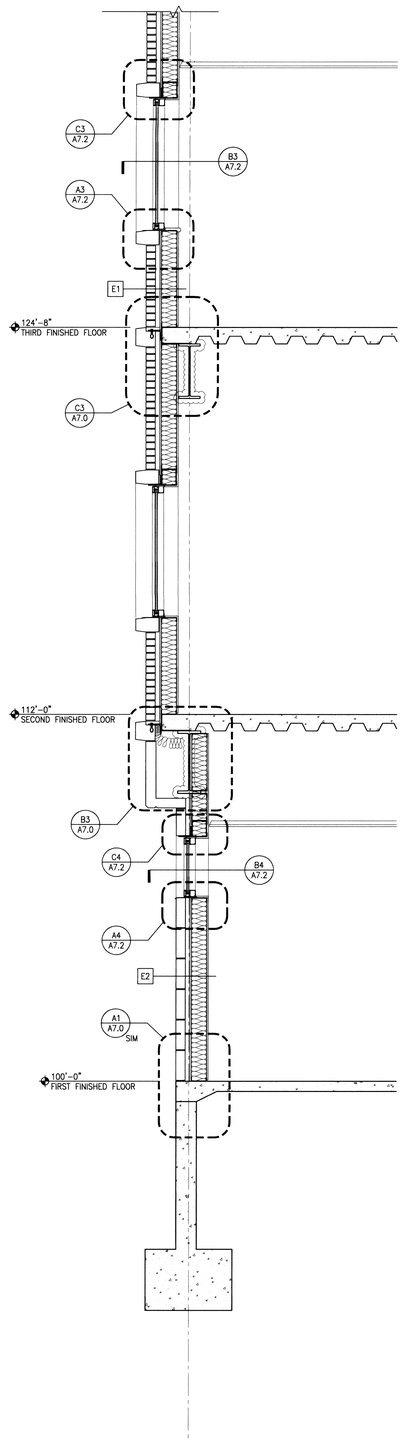

2 WALL SECTION
SCALE: 1/2" = 1'-0"

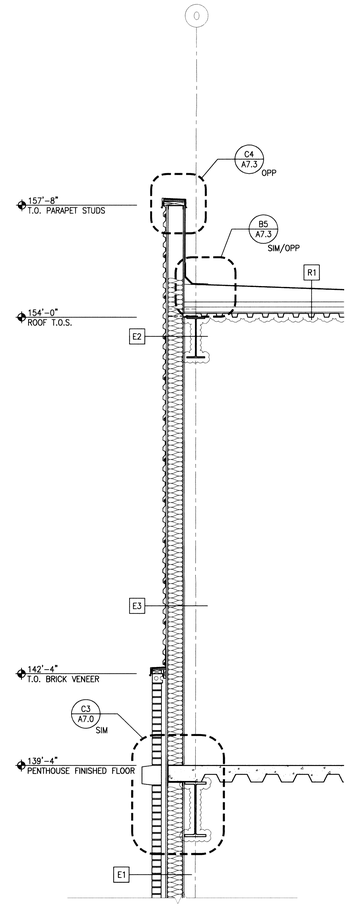

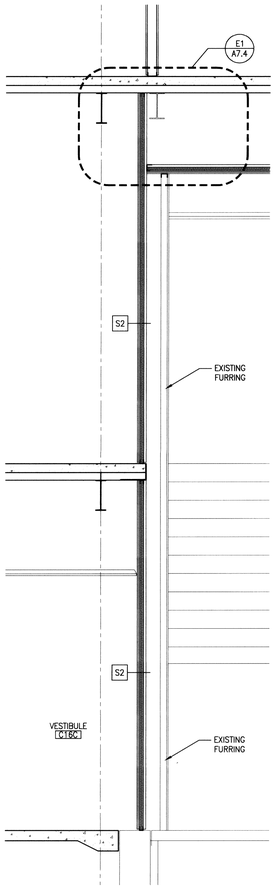

3 WALL SECTION
SCALE: 1/2" = 1'-0"

FOR CONSTRUCTION

REVISIONS	DATE

LICENSED ARCHITECT
STATE OF IDAHO
AR-1885
STATE OF IDAHO
STEVEN C. TUNNEL

ZGA Architects and Planners, Chartered
565 W. Myrtle Street, Suite 225 Boise, Idaho 83702-7606

CAD FILE NAME: 531-317_A5.0-A5.2.dwg
XREF FILE NAME: 85ASD.dwg 531-317_xVAbord.dwg

DRAWING TITLE: WALL SECTIONS
APPROVED: CHIEF OF FACILITY MANAGEMENT SERVICE
APPROVED: MEDICAL CENTER DIRECTOR

PROJECT TITLE: REPLACE AND MODERNIZE SURGERY / INTENSIVE CARE UNIT
BUILDING NUMBER: 85
CHECKED: ST
DRAWN: BB
LOCATION: VAMC BOISE, IDAHO

DATE: 11/01/2011
PROJECT NO.: 531-317
DRAWING NO.: A5.1
DWG 32 OF 188

DEPARTMENT OF VETERANS AFFAIRS

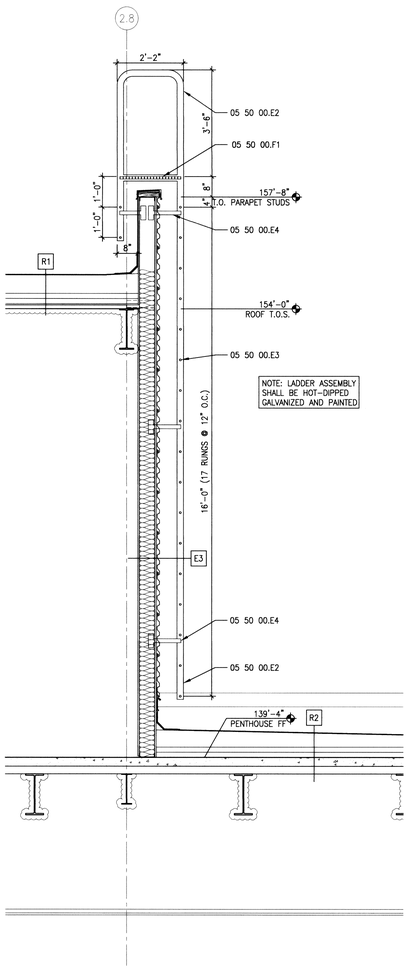

1 WALL SECTION
SCALE: 1/2" = 1'-0"

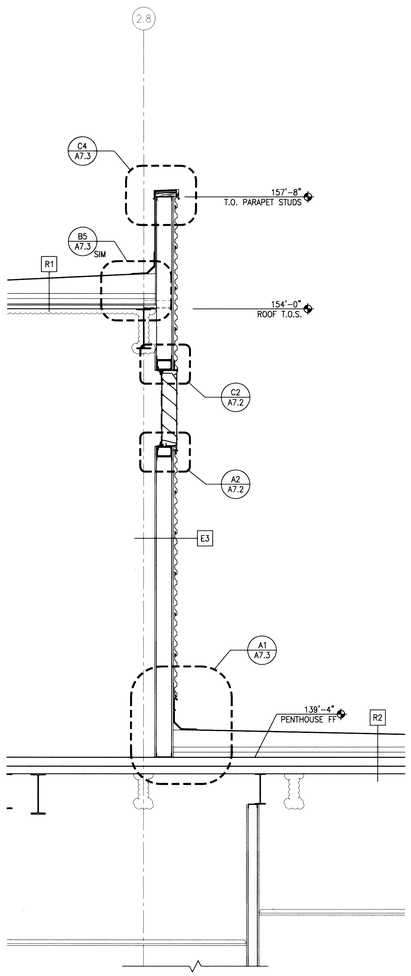

2 WALL SECTION
SCALE: 1/2" = 1'-0"

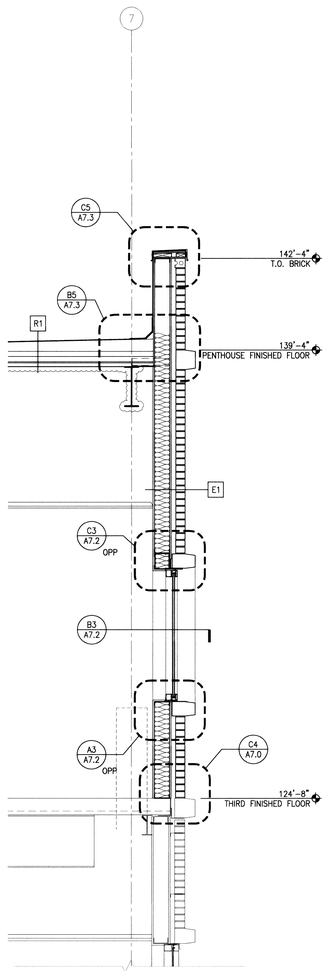

3 WALL SECTION
SCALE: 1/2" = 1'-0"

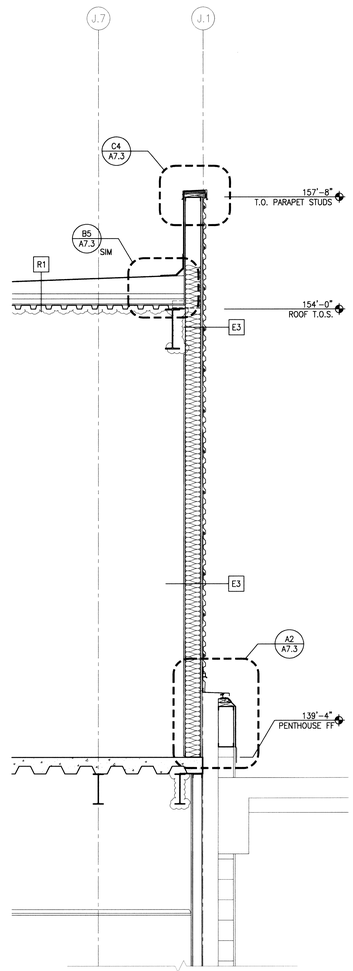

4 WALL SECTION
SCALE: 1/2" = 1'-0"

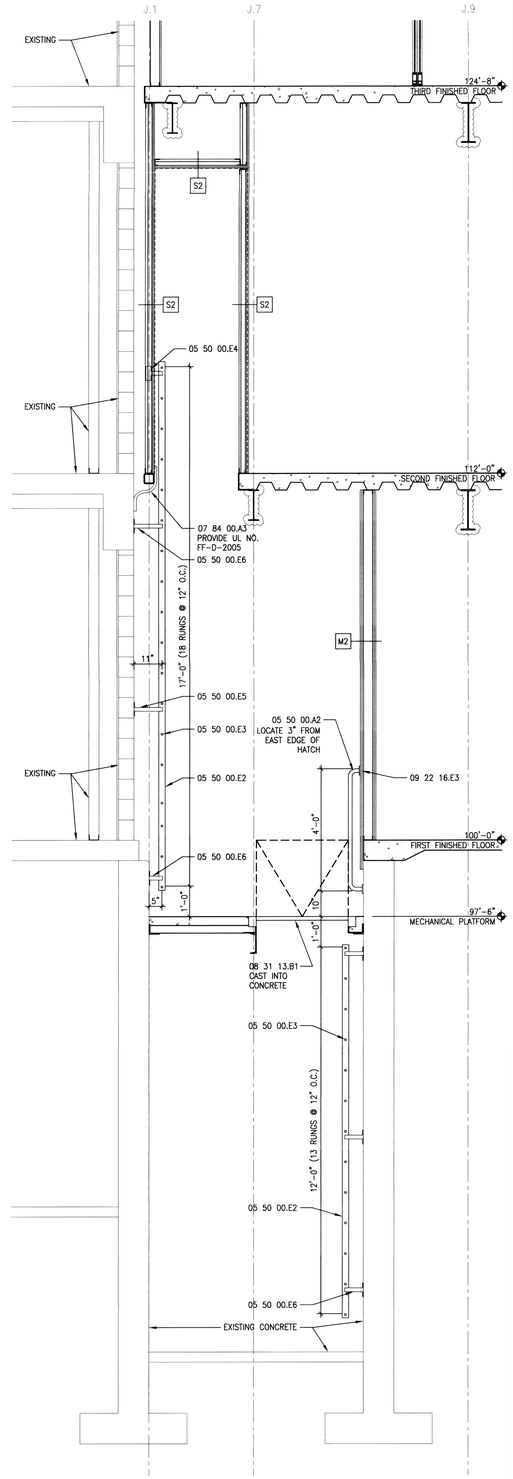

5 WALL SECTION
SCALE: 1/2" = 1'-0"

REFERENCE KEYNOTES

DIVISION 05 – METALS	
05 50 00.A2	– STEEL PIPE HANDRAIL – 1 1/2" DIAMETER
05 50 00.E2	– LADDER SIDE RAILS – 2 1/2" x 3/8" AT 24" O.C.
05 50 00.E3	– LADDER RUNGS – 1" WITH NON-SLIP TEXTURE AT 12" O.C.
05 50 00.E4	– STEEL BRACKET – ANCHOR TO STUDS
05 50 00.E5	– STEEL BRACKET – ANCHOR TO CMU
05 50 00.E6	– STEEL BRACKET – ANCHOR TO CONCRETE
05 50 00.F1	– STEEL GRATING
DIVISION 07 – THERMAL AND MOISTURE PROTECTION	
07 84 00.A3	– FIRE-RESISTIVE JOINT SYSTEM
DIVISION 08 – OPENINGS	
08 31 13.B1	– ACCESS FLOOR DOOR – 30" X 36"

REVISIONS | DATE

LICENSED ARCHITECT
STEVEN C. TOWNE
AR-1885
STATE OF IDAHO

ZGA Architects and Planners, Chartered
565 W. Myrtle Street, Suite 225 Boise, Idaho 83702-7606

CAD FILE NAME: 531-317_A5.0-A5.2.dwg
XREF FILE NAME: 85ASD.dwg 531-317_xVAbord.dwg

DRAWING TITLE: WALL SECTIONS
APPROVED: CHIEF OF FACILITY MANAGEMENT SERVICE
APPROVED: MEDICAL CENTER DIRECTOR

PROJECT TITLE: REPLACE AND MODERNIZE SURGERY / INTENSIVE CARE UNIT
BUILDING NUMBER: 85 | CHECKED: ST | DRAWN: BB
LOCATION: VAMC BOISE, IDAHO

DATE: 11/01/2011
PROJECT NO.: 531-317
DRAWING NO.: A5.2
DWG 33 OF 188

FOR CONSTRUCTION
DEPARTMENT OF VETERANS AFFAIRS

DOOR SCHEDULE

DOOR SIZES

MK	WIDTH	HEIGHT
A	2'-0"	7'-0"
B	3'-0"	7'-0"
C	3'-6"	7'-0"
D	3'-8"	7'-0"
E	4'-0"	7'-0"
F	9'-0"	7'-2 1/2"
G	9'-0"	7'-6"

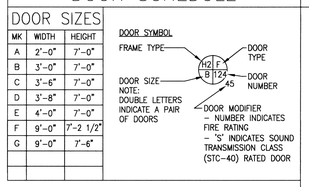

DOOR TYPES

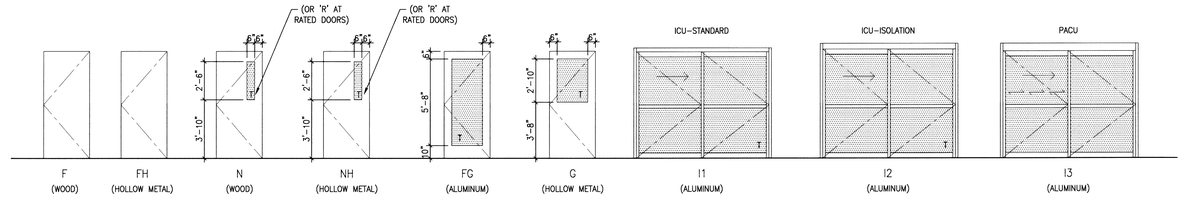

DOOR FRAME TYPES

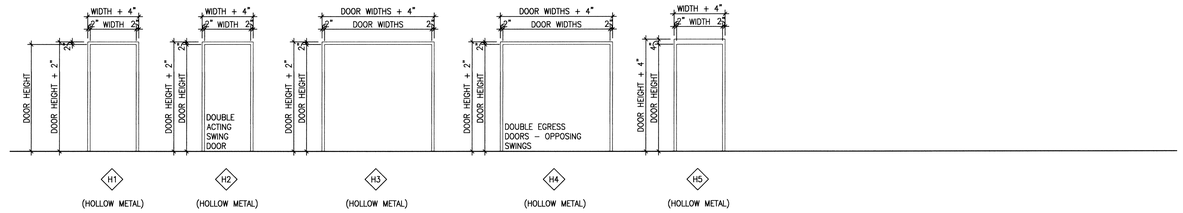

WINDOW FRAME TYPES

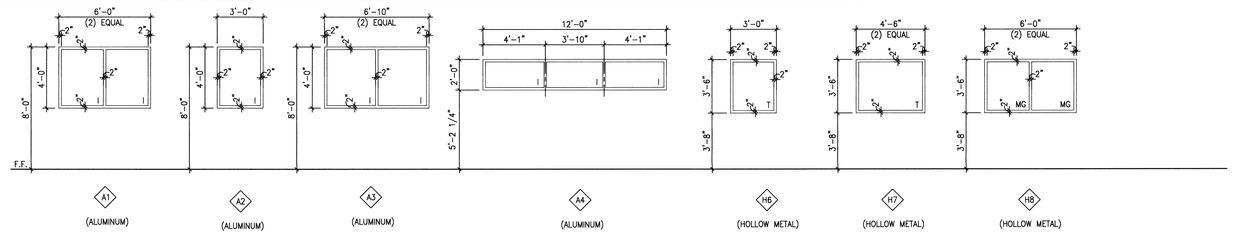

ABBREVIATIONS

AL	ALUMINUM
FF	FACTORY FINISH
HM	HOLLOW METAL (WELDED FRAMES)
I	INSULATING GLASS, GLAZING TYPES G–1 AND G–2
KD	KNOCK–DOWN HOLLOW METAL
MG	MIRRORED GLASS (ONE–WAY VISION) G–3
P	PAINT
T	TEMPERED SAFETY GLASS, GLAZING TYPE G–1
WD	WOOD
WG	WIRE GLASS
R	FIRE–RATED GLASS CERAMIC (G–4)

DOOR AND FRAME NOTES

1. PROVIDE BACKING IN WALLS AT WALL MOUNTED DOOR STOPS.
2. ALL GLAZING IN DOORS SHALL BE TEMPERED SAFETY GLAZING UNLESS NOTED. OTHERWISE.
3. PROVIDE INTERIOR WALL DOOR HEADERS PER DETAIL B6/A6.0.
4. ALL INTERIOR HOLLOW METAL DOORS SHALL BE 16 GAUGE WITH 16 GAUGE HOLLOW METAL FRAMES

RATED DOOR AND FRAME NOTES

1. ALL RATED DOORS SHALL BEAR APPROVAL AGENCY RATING LABELS.
2. HOLLOW METAL DOOR FRAMES SHALL BE RATED AND LABELED NOT LESS THAN THE RATING OF THE DOOR.
3. DOOR HARDWARE ON RATED DOORS SHALL BE LISTED FOR THE RATING OF THE DOOR.
4. ALL RATED DOORS TO HAVE CLOSERS (SPRING HINGES NOT ALLOWED) AND BE SELF LATCHING OR AUTOMATIC CLOSING.
5. ALL GLAZING IN RATED DOORS SHALL BE GLASS CERAMIC.
6. FOR AUTOMATIC CLOSING FIRE ASSEMBLIES (DOORS WITH HOLD–OPEN DEVICES) THE CONTRACTOR SHALL COORDINATE ALL THE REQUIREMENTS FOR ALARM INTERCONNECTION AND POWER OUTAGE AND HEAT ACTIVATED AUTOMATIC RELEASE REQUIREMENTS.
7. ALL RATED DOUBLE DOORS SHALL HAVE A COORDINATOR AND ASTRAGAL, UNLESS PROVIDED WITH A MULLION.

REFERENCE KEYNOTES

DIVISION 06 – WOOD, PLASTICS, AND COMPOSITES		
06 10 00.D1	–	SHIM
DIVISION 07 – THERMAL AND MOISTURE PROTECTION		
07 92 00.A3	–	SEALANT – BOTH SIDES
DIVISION 08 – OPENINGS		
08 11 00.B1	–	HOLLOW METAL FRAME
08 42 43.A1	–	ICU ROOM SLIDING DOOR
08 80 00.C1	–	TEMPERED GLASS – 1/4"
DIVISION 09 – FINISHES		
09 22 16.H1	–	BOXED HEADER – SEE DETAIL B6/A6.0

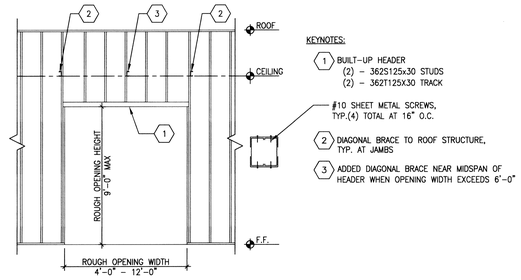

B6 HEADER AT INTERIOR PARTITION WALL
SCALE: 1/4" = 1'-0"

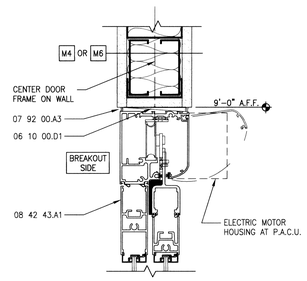

A4 HEAD DETAIL AT I.C.U. STYLE DOOR
SCALE: 3" = 1'-0"

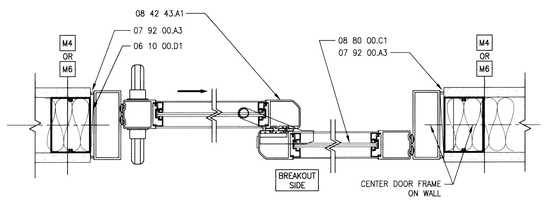

A5 JAMB DETAIL AT I.C.U. STYLE DOOR
SCALE: 3" = 1'-0"

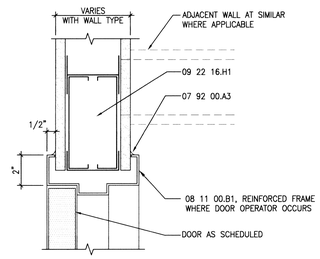

A6 DOOR HEAD/JAMB SIMILAR
SCALE: 3" = 1'-0"

FOR CONSTRUCTION

REVISIONS	DATE

Architects and Planners, Chartered
565 W. Myrtle Street, Suite 225 Boise, Idaho 83702-7606

CAD FILE NAME: 531–317_A6.0.dwg
XREF FILE NAME: 531–317_xVAbord.dwg, 531–317_d008.dwg

DRAWING TITLE: DOOR SCHEDULE AND FRAME TYPES

PROJECT TITLE: REPLACE AND MODERNIZE SURGERY / INTENSIVE CARE UNIT

DATE: 11/01/2011
PROJECT NO. 531–317

APPROVED: CHIEF OF FACILITY MANAGEMENT SERVICE
APPROVED: MEDICAL CENTER DIRECTOR

BUILDING NUMBER: 85
CHECKED: ST
DRAWN: SM
LOCATION: VAMC BOISE, IDAHO

DRAWING NO. A6.0
DWG 34 OF 188

DEPARTMENT OF VETERANS AFFAIRS

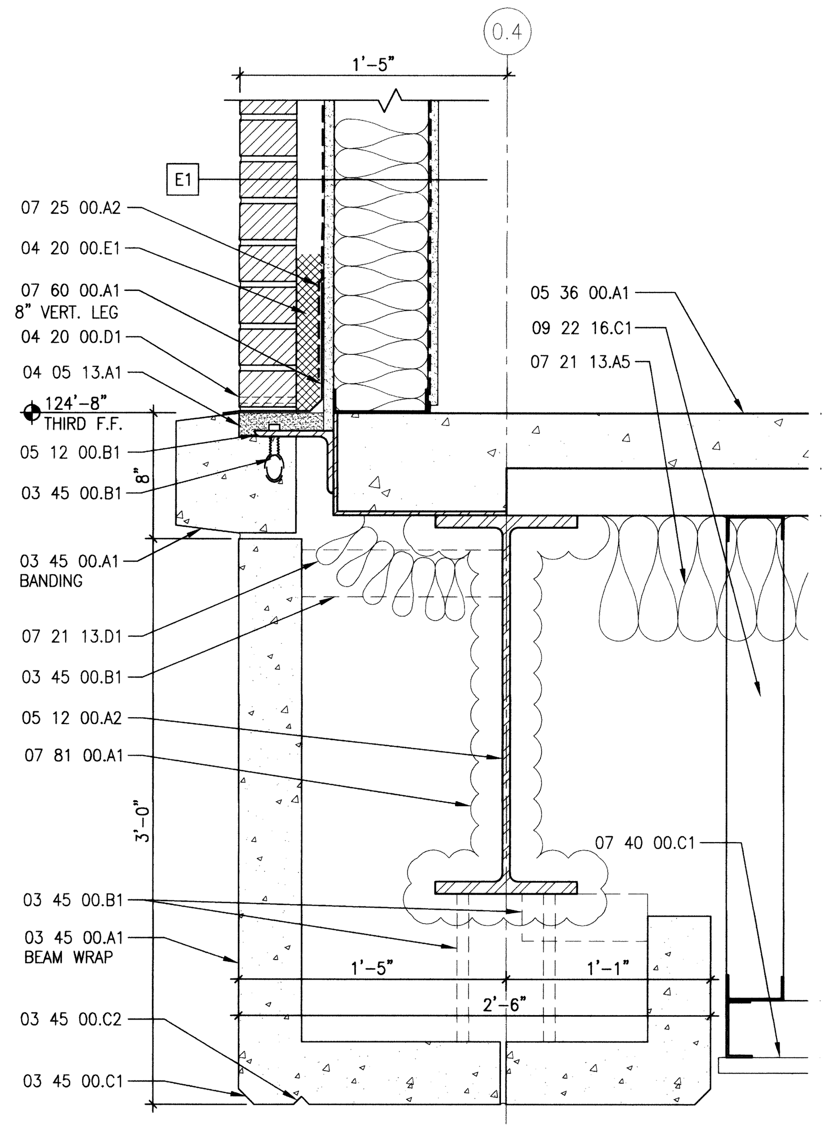

C1 DETAIL AT PRECAST BEAM WRAP
SCALE: 1 1/2" = 1'-0"

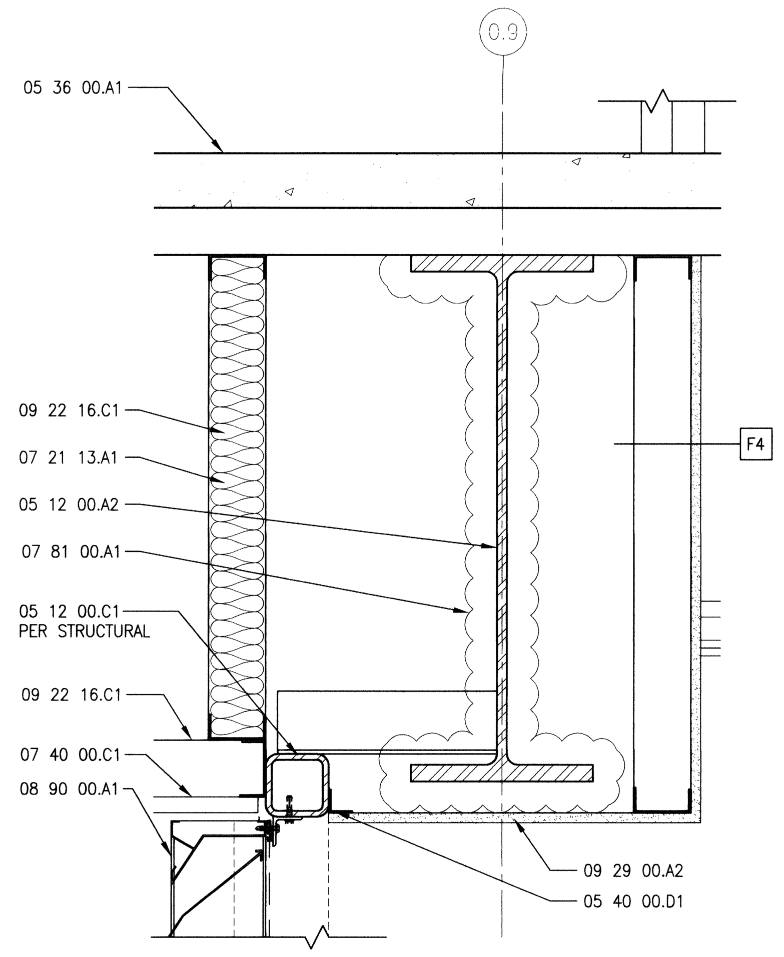

C2 DETAIL AT LOUVER HEAD
SCALE: 1 1/2" = 1'-0"

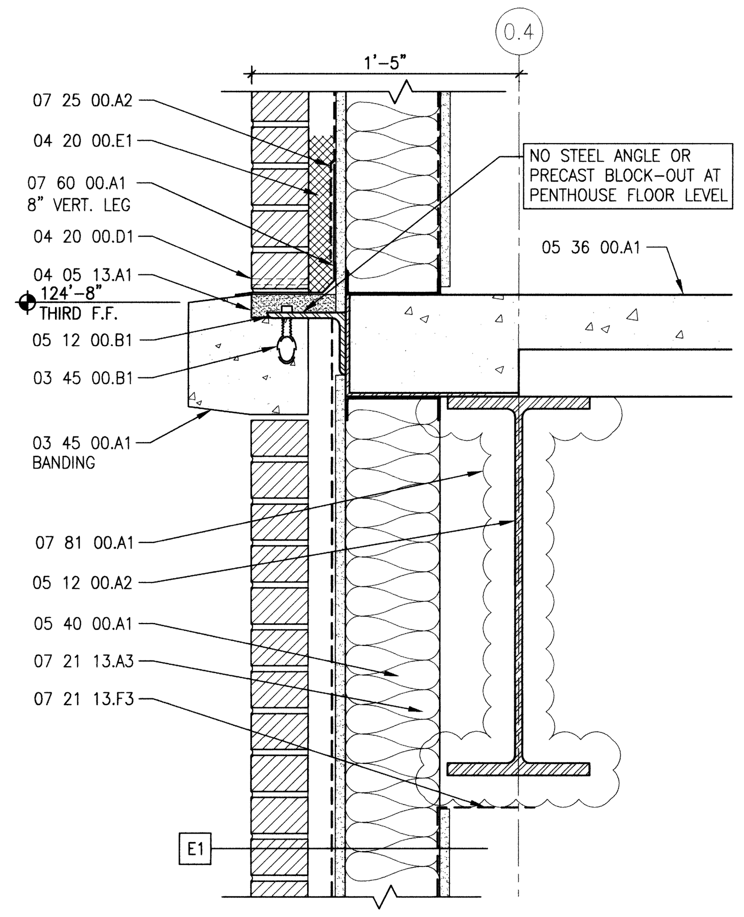

C3 DETAIL
SCALE: 1 1/2" = 1'-0"

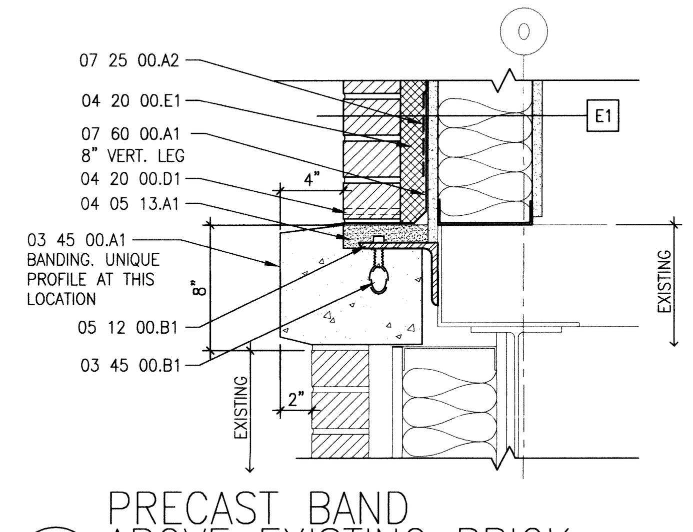

D5 PRECAST BAND ABOVE EXISTING BRICK
SCALE: 1-1/2" = 1'-0"
D049

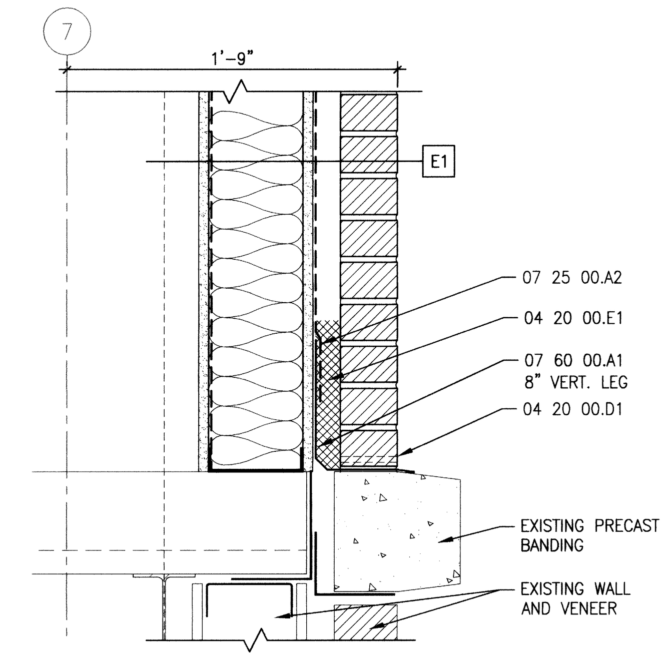

C4 DETAIL AT EXISTING PRECAST BANDING
SCALE: 1 1/2" = 1'-0"

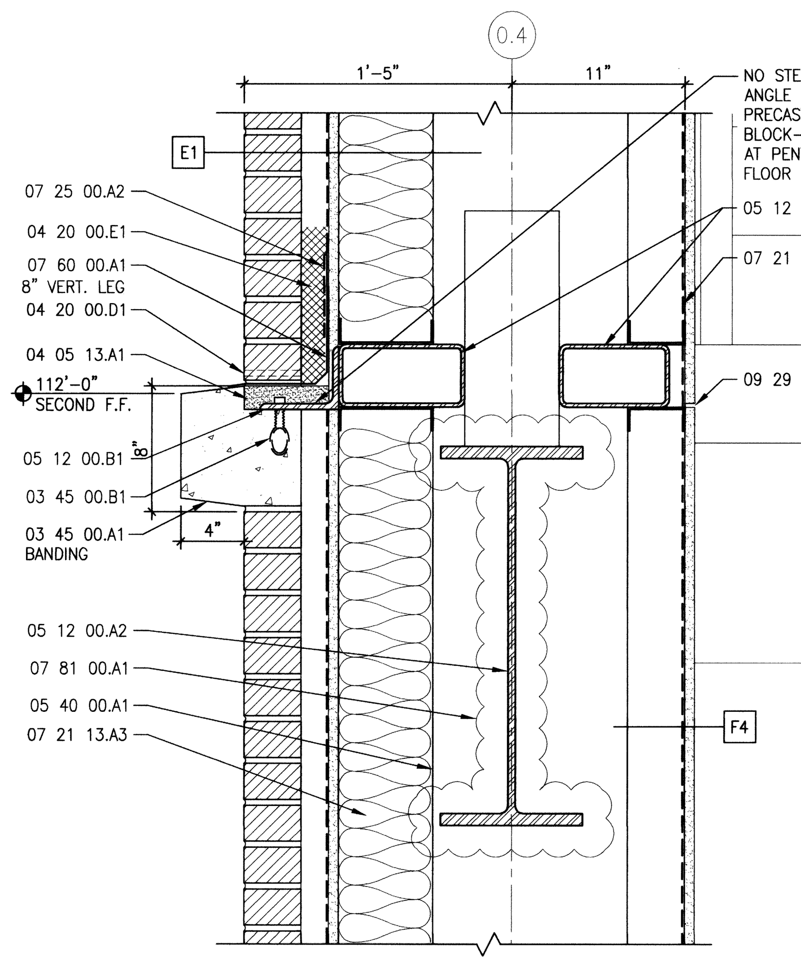

B1 DETAIL AT STAIR
SCALE: 1 1/2" = 1'-0"

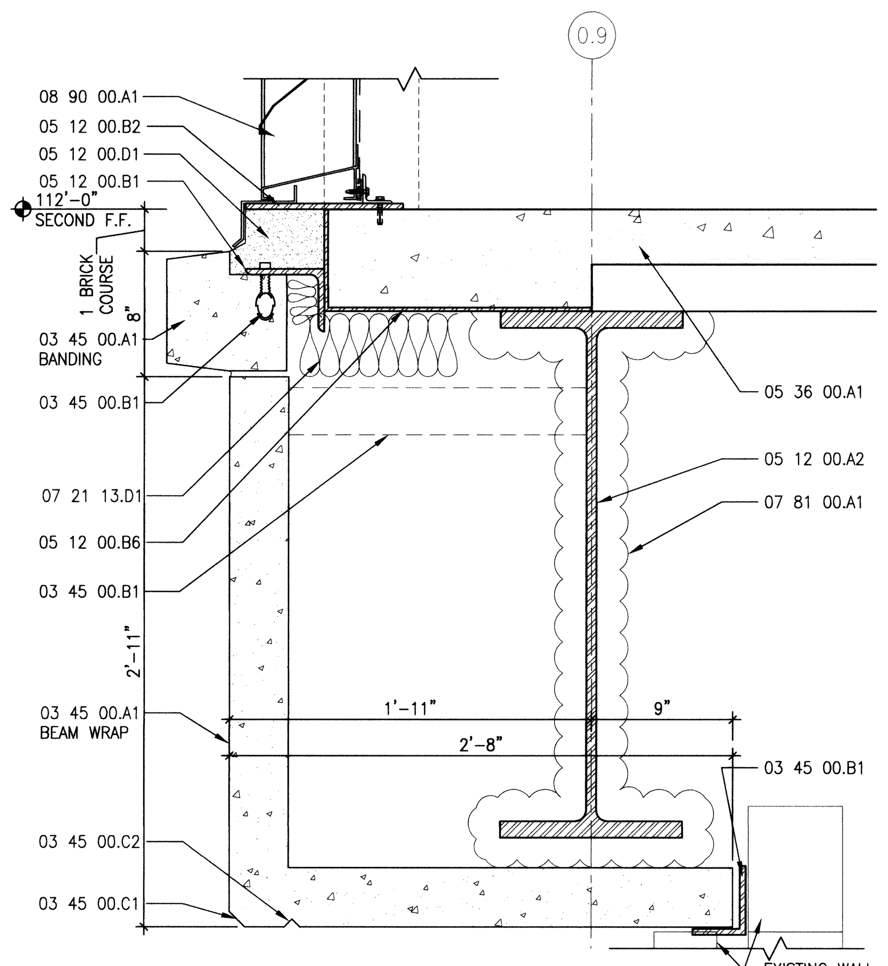

B2 DETAIL AT LOUVER SILL
SCALE: 1 1/2" = 1'-0"

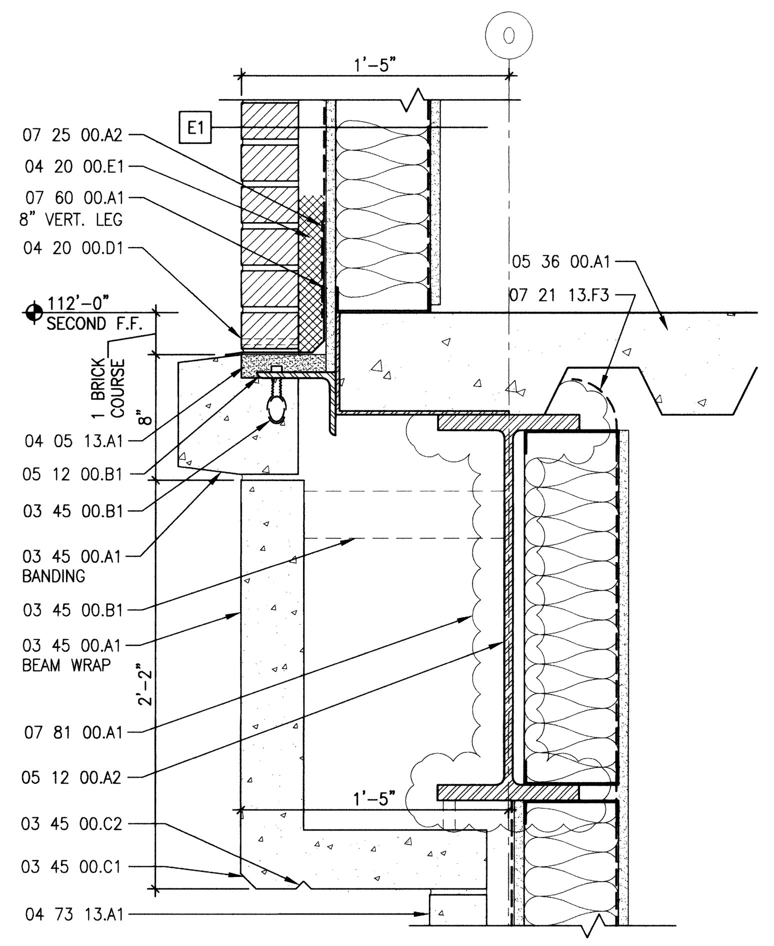

B3 DETAIL AT PRECAST BEAM WRAP
SCALE: 1 1/2" = 1'-0"

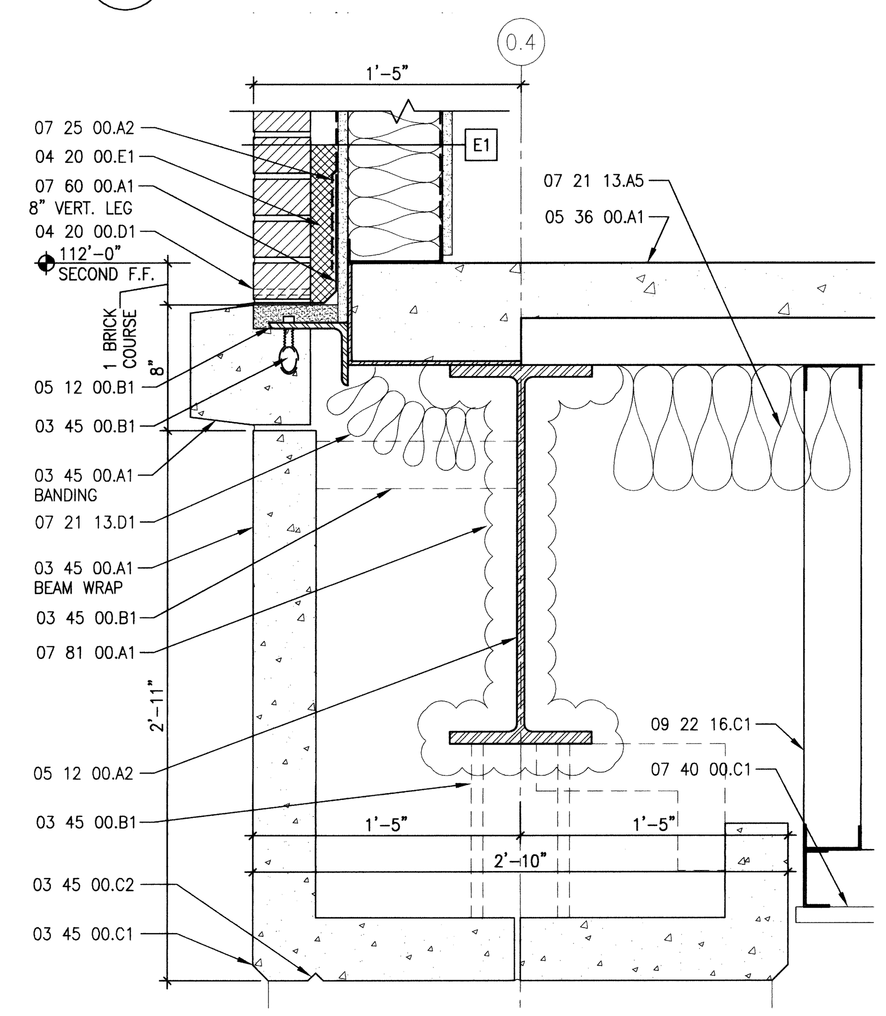

B4 DETAIL AT PRECAST BEAM WRAP
SCALE: 1 1/2" = 1'-0"

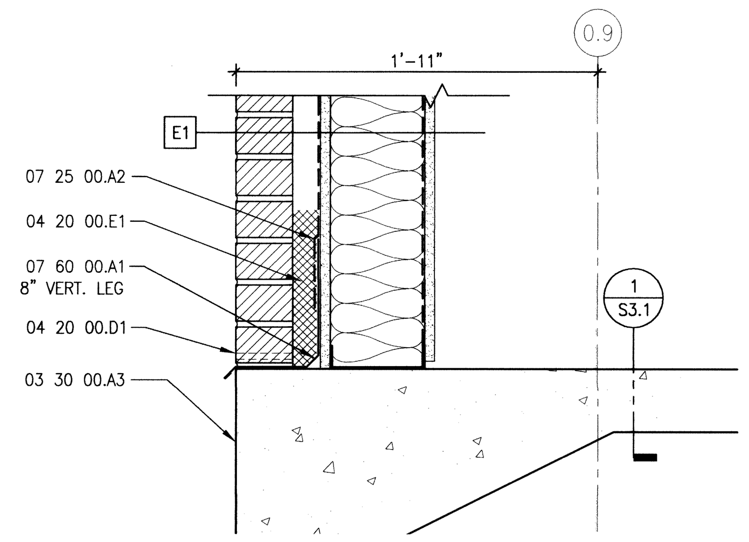

A1 DETAIL AT SLAB-ON-GRADE
SCALE: 1 1/2" = 1'-0"

INTERIOR WALL ASSEMBLIES

NOTE: ALL FULL-HEIGHT PARTITIONS THAT TERMINATE AT THE UNDERSIDE OF STRUCTURE SHALL HAVE A DEFLECTION TOP TRACK CAPABLE OF ACCOMMODATING 1/2" OF VERTICAL MOVEMENT AFTER THE BUILDING DEAD LOAD IS IN PLACE.

PARTITIONS DESIGNATED AS SMOKE PARTITION SHALL BE FULL HEIGHT, SEALED TOP AND BOTTOM, AND HAVE ALL PENETRATIONS SEALED TO FORM A CONTINUOUS MEMBRANE THAT LIMITS THE TRANSFER OF SMOKE.

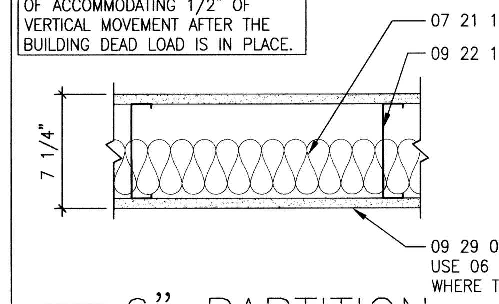

M6 6" PARTITION
STC 45-49

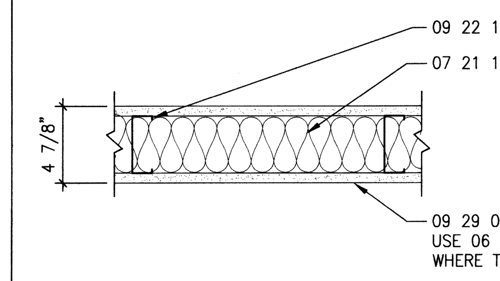

M4 3-5/8" PARTITION
STC 45-49

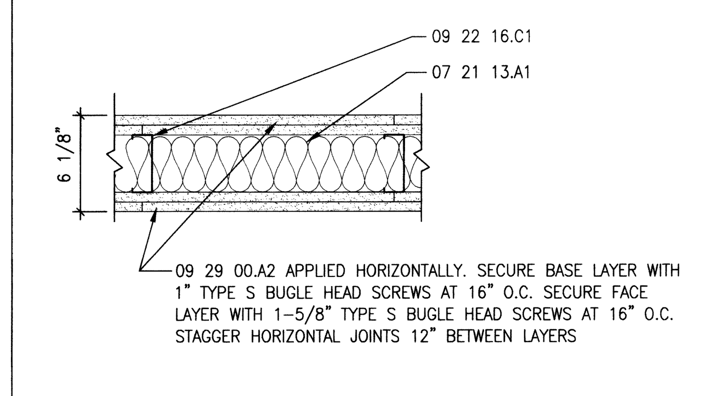

M2 2-HOUR RATED PARTITION
GA FILE NO. WP 1522
STC 55-59

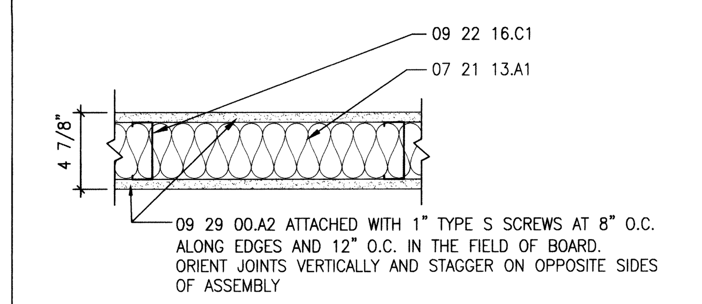

M1 1-HOUR RATED PARTITION
GA FILE NO. WP 1072
STC 45-49

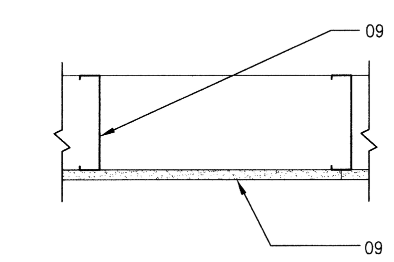

F6 6" FURRING

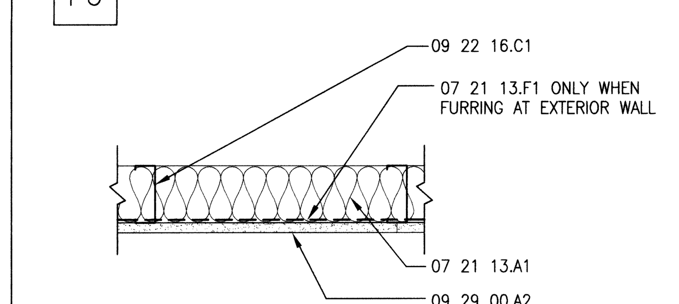

F4 3-5/8" FURRING
EXTEND 6" ABOVE CEILING MINIMUM

GENERAL SHEET NOTES

A. ALL THROUGH-WALL FLASHINGS, FLASHINGS WITH DRIP EDGES, COPINGS AND GENERAL SHEET METAL WORK EXPOSED TO VIEW SHALL HAVE HEMMED EDGES.

B. THROUGH-WALL FLASHINGS SHALL HAVE A 8" MINIMUM VERTICAL LEG. LAP WEATHER BARRIER OVER SHEET METAL FLASHING A MINIMUM OF 4".

C. SEAL PERIMETER OF ALL STC RATED WALL ASSEMBLIES WITH ACOUSTICAL SEALANT.

REFERENCE KEYNOTES

DIVISION 03 – CONCRETE		
03 30 00.A3	–	CONCRETE SLAB ON GRADE – SEE STRUCTURAL
03 45 00.A1	–	PRECAST CONCRETE
03 45 00.B1	–	PRECAST CONNECTION BY PRECAST CONTRACTOR
03 45 00.C1	–	CHAMFER EACH SIDE – MATCH SIZE AND PROFILE OF EXISTING PRECAST
03 45 00.C2	–	DRIP RELIEF
DIVISION 04 – MASONRY		
04 05 13.A1	–	MASONRY MORTAR
04 20 00.A1	–	FACE BRICK VENEER
04 20 00.D1	–	WEEP HOLE WICKS AT 24" OC
04 20 00.E1	–	MORTAR DROPPING PROTECTION
04 73 13.A1	–	MANUFACTURED STONE MASONRY VENEER
04 20 00 H1	–	6" CONCRETE MASONRY UNIT
DIVISION 05 – METALS		
05 12 00.A2	–	STEEL BEAM
05 12 00.B1	–	STEEL ANGLE
05 12 00.B2	–	STEEL PLATE
05 12 00.B6	–	STEEL CLOSURE PLATE
05 12 00.C1	–	TUBE STEEL
05 12 00.D1	–	NON-SHRINK GROUT
05 31 00.A1	–	METAL DECK
05 36 00.A1	–	COMPOSITE METAL DECKING
05 40 00.A1	–	STEEL STUD PER STRUCTURAL
05 40 00.D1	–	LIGHT GAUGE ANGLE, 2 1/2X3X16GA.
DIVISION 06 – WOOD, PLASTICS, AND COMPOSITES		
06 16 63.A1	–	CEMENTITIOUS SHEATHING – 1/2"
DIVISION 07 – THERMAL AND MOISTURE PROTECTION		
07 21 13.A1	–	R-15 BATT INSULATION – UNFACED
07 21 13.A3	–	R-19 BATT INSULATION – UNFACED
07 21 13.A5	–	R-30 BATT INSULATION – FACED
07 21 13.D1	–	FILL WITH INSULATION
07 21 13.F1	–	VAPOR BARRIER
07 21 13.F3	–	SECURE AND SEAL VAPOR BARRIER TO SPRAYED-ON FIREPROOFING
07 22 00.A1	–	RIGID POLYISOCYANURATE INSULATION – 2 LAYERS OF 2"
07 22 00.A2	–	TAPERED POLYISOCYANURATE INSULATION
07 22 00.C1	–	SUBSTRATE BOARD – 1/2"
07 25 00.A1	–	WEATHER BARRIER
07 25 00.A2	–	LAP WEATHER BARRIER A MINIMUM OF 4" OVER FLASHING
07 40 00.A1	–	PRE-FINISHED METAL WALL PANELS
07 40 00.C1	–	PRE-FINISHED METAL SOFFIT PANELS – VENTED
07 54 23.A1	–	TPO MEMBRANE ROOFING
07 60 00.A1	–	PREFINISHED SHEET METAL FLASHING
07 81 00.A1	–	SPRAYED-ON FIREPROOFING
DIVISION 08 – OPENINGS		
08 90 00.A1	–	LOUVER – SEE MECHANICAL
DIVISION 09 – FINISHES		
09 22 16.B1	–	STEEL STUDS – 250S125-30 AT 16" O.C.
09 22 16.C1	–	STEEL STUDS – 362S125-30 AT 16" O.C.
09 22 16.D1	–	STEEL STUDS – 600S125-30 AT 16" O.C.
09 22 16.G1	–	2 1/2" C-H STUDS (212CH-34) AT 24" O.C.
09 29 00.A1	–	GYPSUM BOARD – 1/2"
09 29 00.A2	–	GYPSUM BOARD – 5/8"
09 29 00.B2	–	GYPSUM SHEATHING BOARD – 5/8"
09 29 00.D1	–	CONTROL JOINT

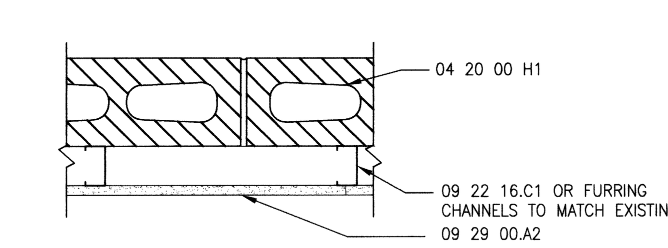

X1 WINDOW INFILL

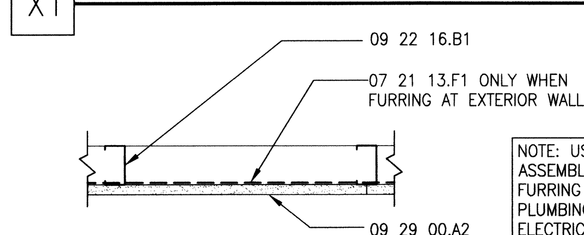

NOTE: USE THIS WALL ASSEMBLY AT ALL COLUMN FURRING EXCEPT WHERE PLUMBING AND ELECTRICAL DEVICES REQUIRE DEEPER SECTION.

F2 2.5" FURRING
EXTEND 6" ABOVE CEILING MINIMUM
STC 50-54

ROOF ASSEMBLIES

NOTE: PROVIDE MECHANICALLY ATTACHED SUBSTRATE BOARD TO DECK PRIOR TO APPLYING SPRAY-ON FIREPROOFING

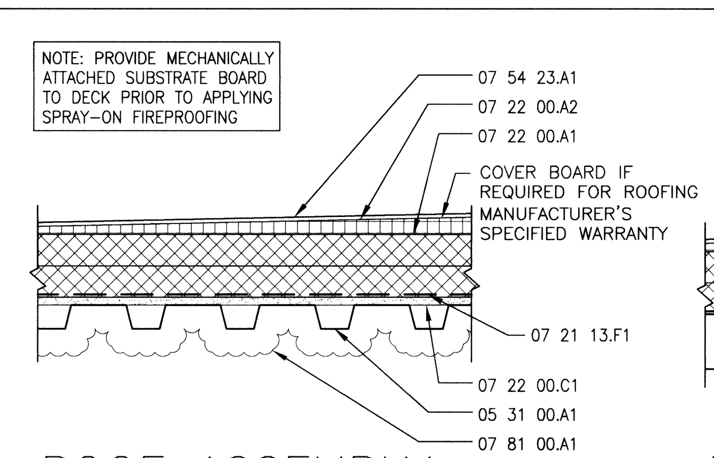

R1 ROOF ASSEMBLY
SPRAYED-ON FIRE PROOFING TO PROVIDE 1-HR RATING

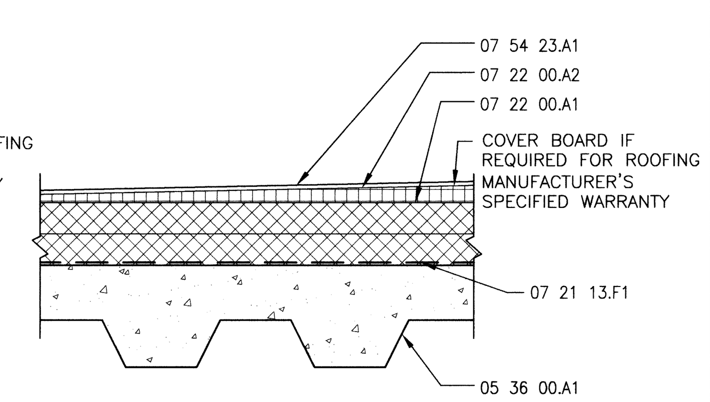

R2 ROOF ASSEMBLY
2HR – UL DESIGN NO. D907
UL REPORT CBXQ.R14701 (FIBER REINFORCEMENT)

EXTERIOR WALL ASSEMBLIES

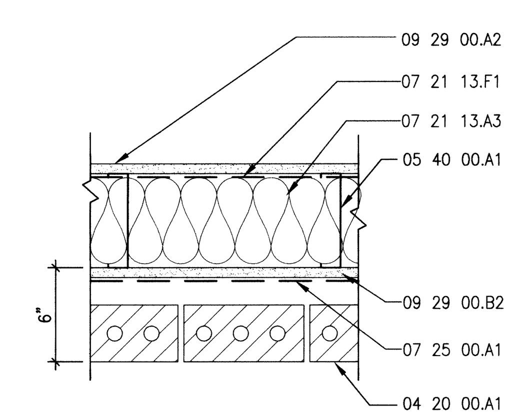

E1 BRICK VENEER
BRICK TO PROVIDE 1-HR RATING AT SOUTH AND WEST ELEVATIONS PER IBC TABLE 720.1(2)

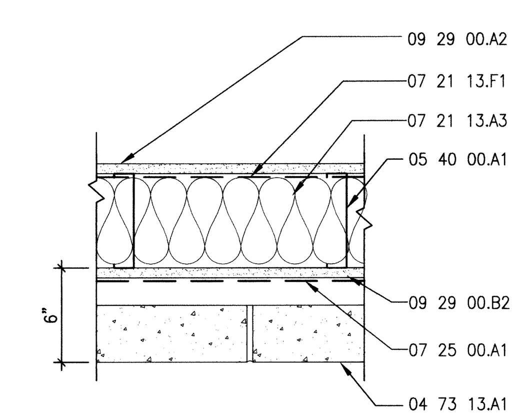

E2 MFR. STONE VENEER
MANUFACTURED STONE TO PROVIDE 1-HR RATING PER IBC TABLE 720.1(2)

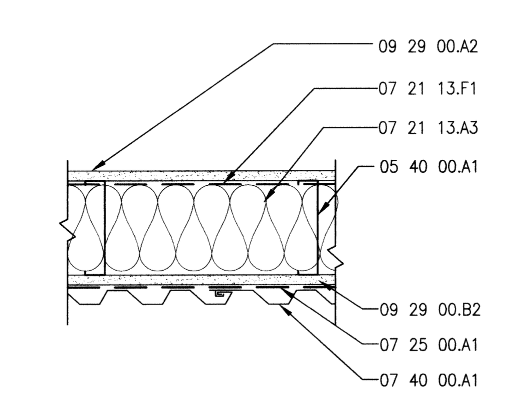

E3 METAL PANEL WALL
1-HR RATING AT SOUTH AND WEST ELEVATIONS PER GA. FILE NO WP1072 – SEE TYPE M1 FOR ATTACHMENT OF GYPSUM PRODUCTS

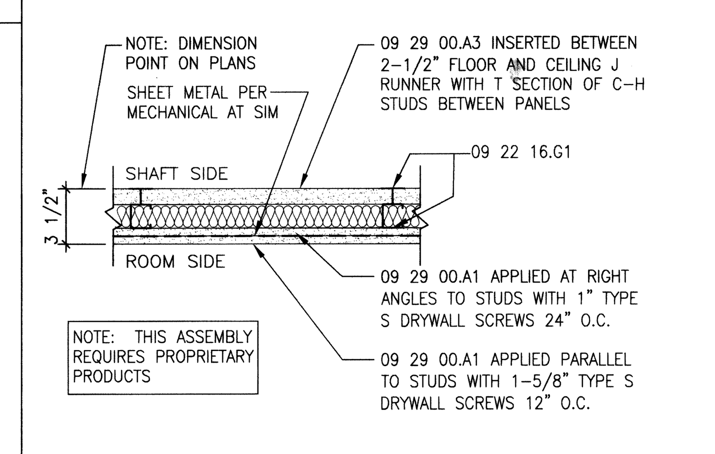

S2 2-HOUR SHAFT WALL
GA FILE NO. WP 7051

FOR CONSTRUCTION

REVISIONS	DATE

LICENSED ARCHITECT, BOISE, IDAHO, AR-1885, STATE OF IDAHO, STEVEN C. TURNEY — Nov. 1, 2011

ZGA Architects and Planners, Chartered
565 W. Myrtle Street, Suite 225 Boise, Idaho 83702-7606

CAD FILE NAME: 531-317_A7.0.dwg
XREF FILE NAME: 85ASD.dwg, 531-317_xVAbord.dwg

DRAWING TITLE: ASSEMBLY DETAILS	PROJECT TITLE: REPLACE AND MODERNIZE SURGERY / INTENSIVE CARE UNIT			DATE: 11/01/2011
				PROJECT NO.: 531-317
APPROVED: CHIEF OF FACILITY MANAGEMENT SERVICE	BUILDING NUMBER: 85	CHECKED: ST	DRAWN: SM	DRAWING NO.: A7.0
APPROVED: MEDICAL CENTER DIRECTOR	LOCATION: VAMC BOISE, IDAHO			DWG 35 OF 188

DEPARTMENT OF VETERANS AFFAIRS

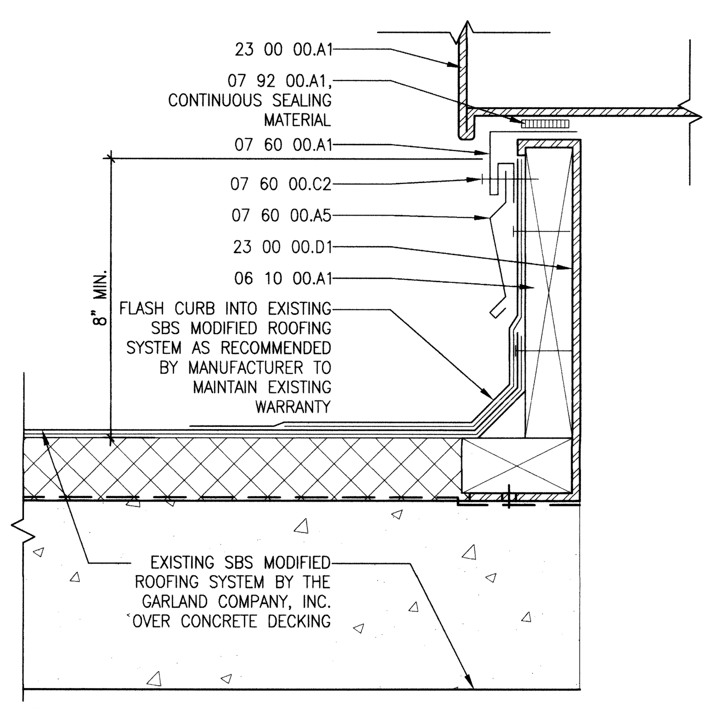

D1 EQUIP. CURB AT EXIST. ROOF
SCALE: 3" = 1'-0"

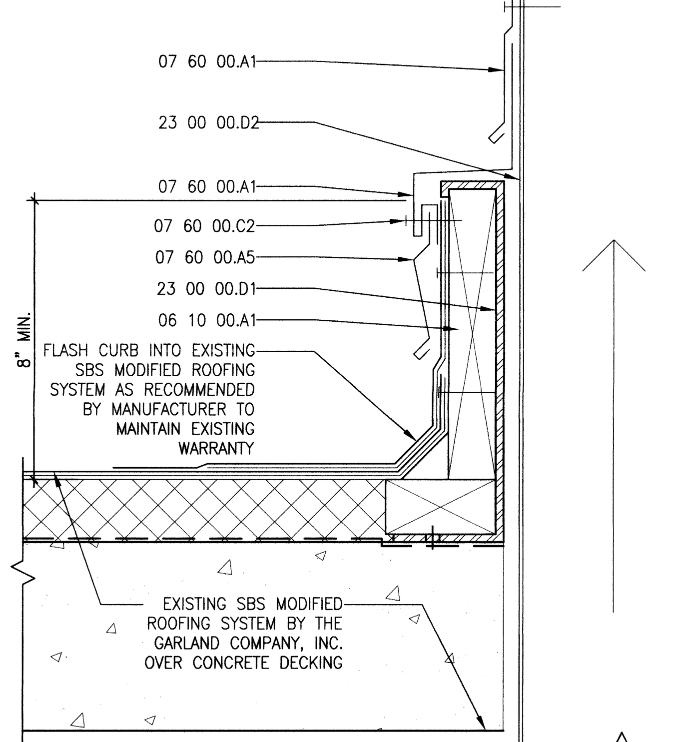

D2 DUCT PENETRATION AT ROOF
SCALE: 3" = 1'-0"

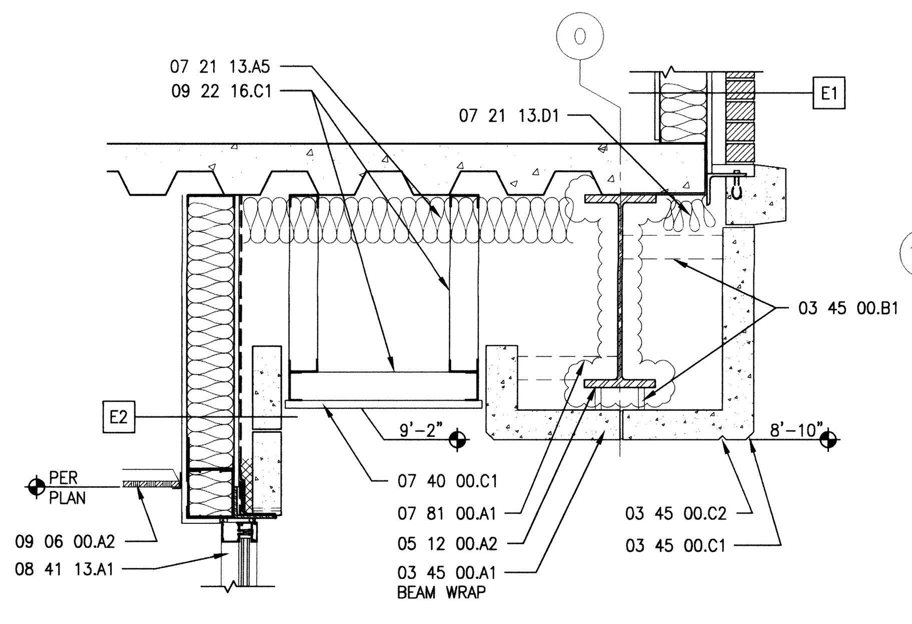

D3 EXTERIOR SOFFIT SECTION
SCALE: 3/4" = 1'-0"

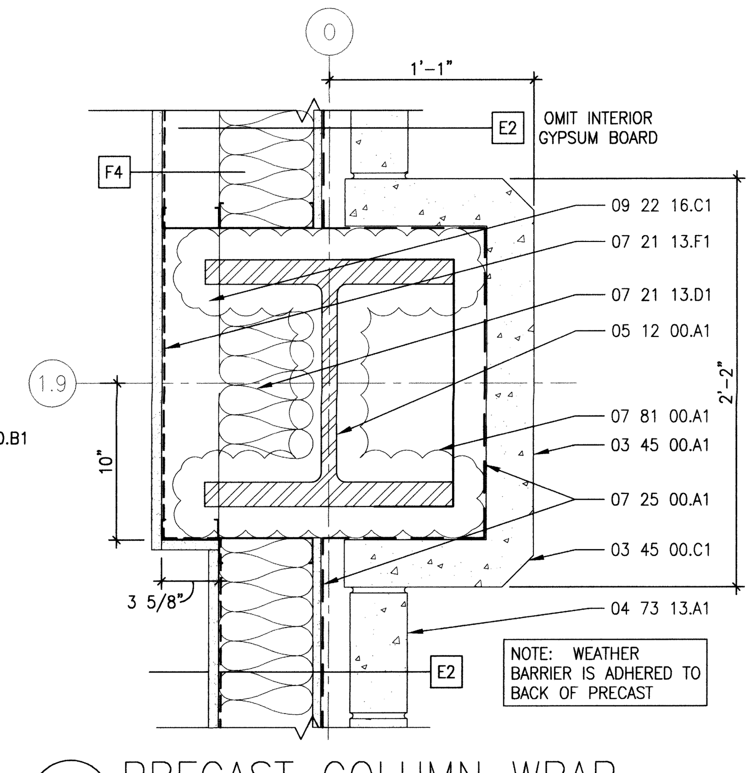

D4 PRECAST COLUMN WRAP
SCALE: 1-1/2" = 1'-0"

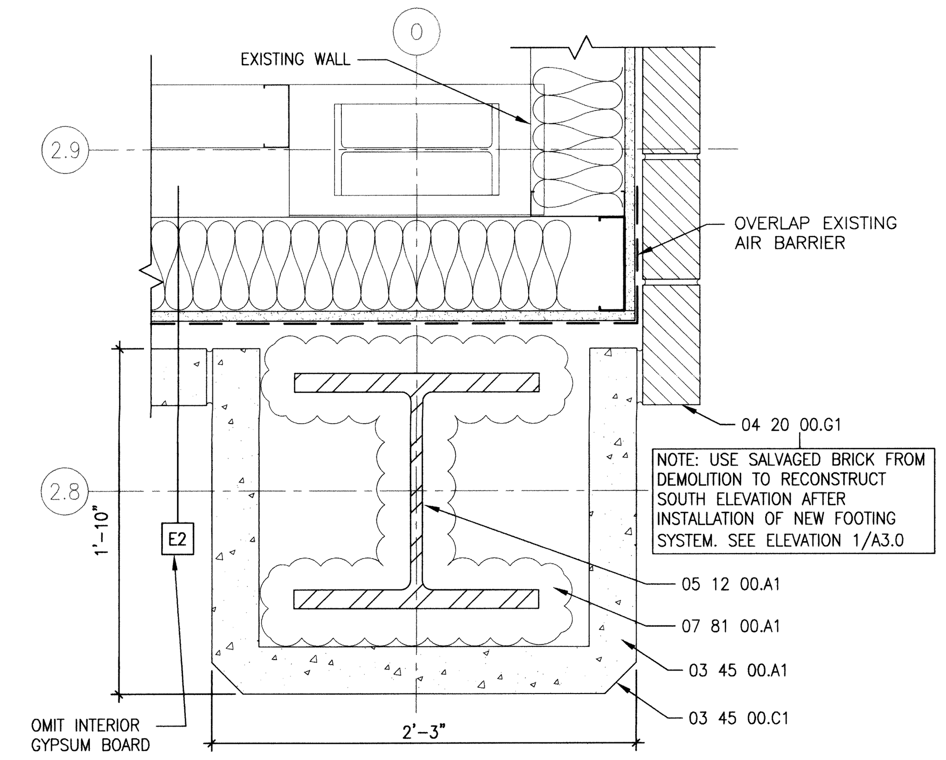

D5 PRECAST COLUMN WRAP
SCALE: 1-1/2" = 1'-0"

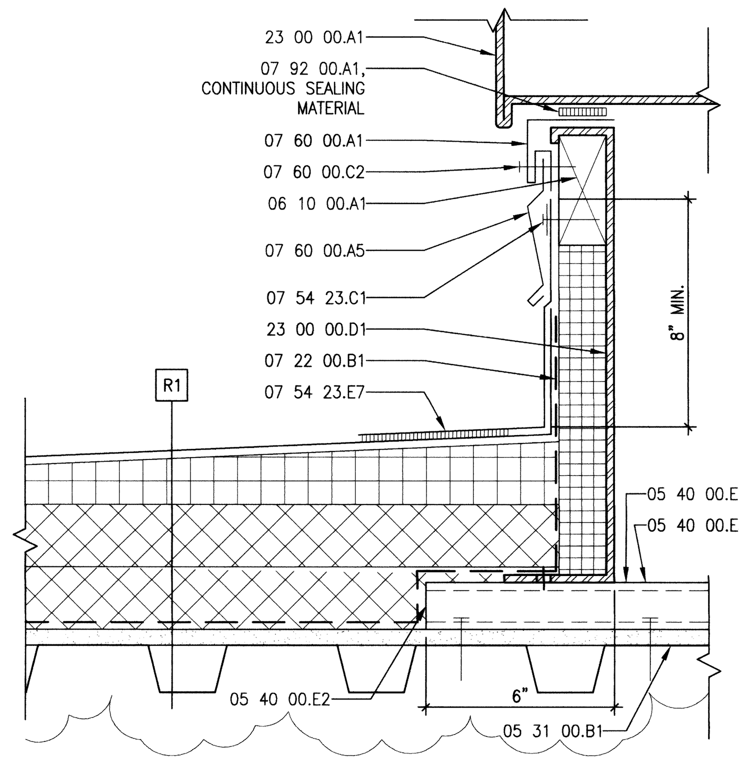

C1 EQUIPMENT CURB AT TPO
SCALE: 3" = 1'-0"

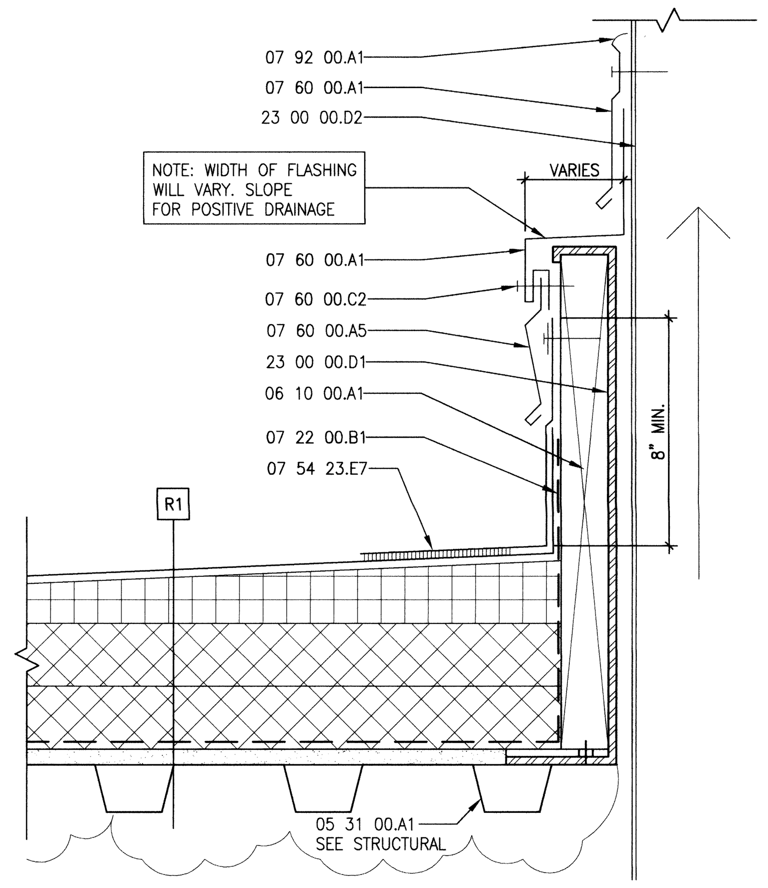

C2 ROOF CURB AT EXISTING DUCT
SCALE: 3" = 1'-0"

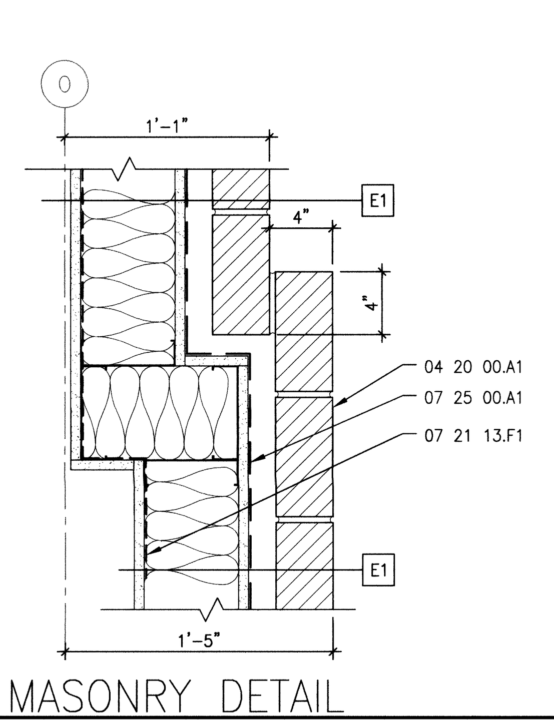

C3 MASONRY DETAIL
SCALE: 1-1/2" = 1'-0"

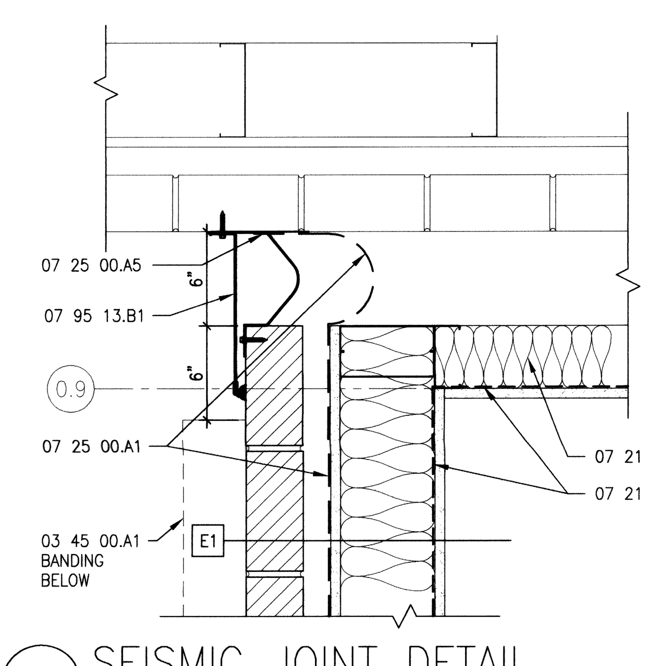

C4 SEISMIC JOINT DETAIL
SCALE: 1-1/2" = 1'-0"

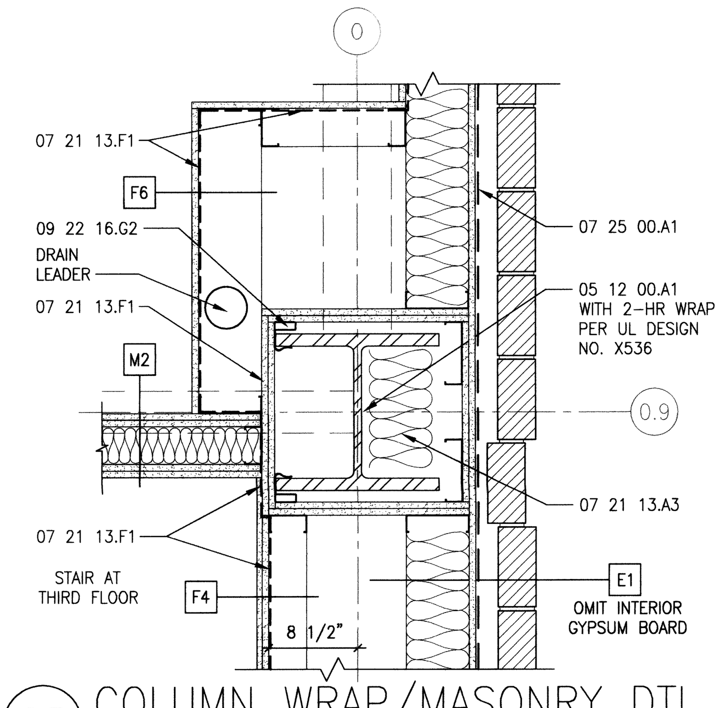

C5 COLUMN WRAP/MASONRY DTL
SCALE: 1" = 1'-0"

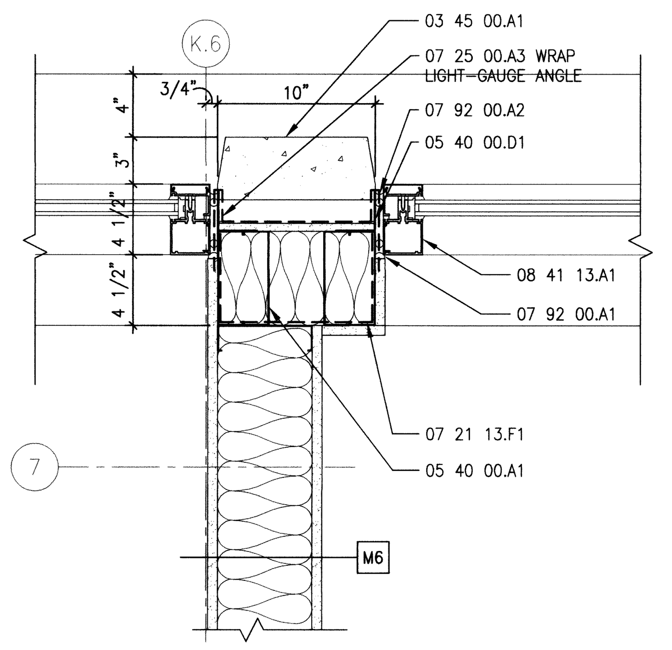

B1 WALL/PRECAST DETAIL
SCALE: 1-1/2" = 1'-0"

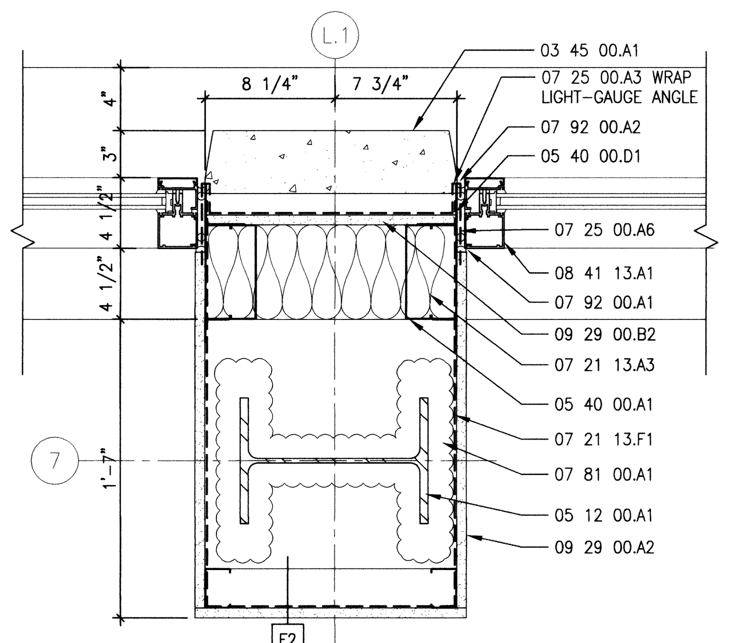

B2 COLUMN WRAP/PRECAST DTL
SCALE: 1-1/2" = 1'-0"

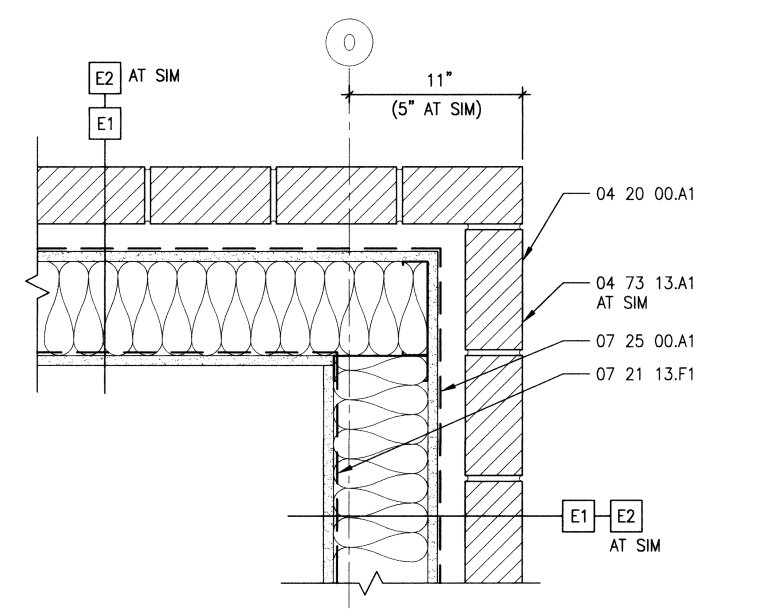

B3 MASONRY CORNER DETAIL
SCALE: 1-1/2" = 1'-0"

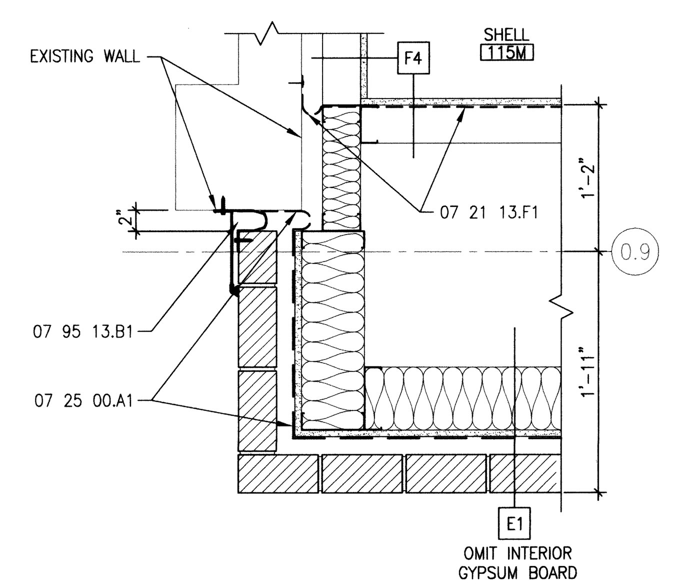

B4 MASONRY TO EXISTING CORNER
SCALE: 1" = 1'-0"

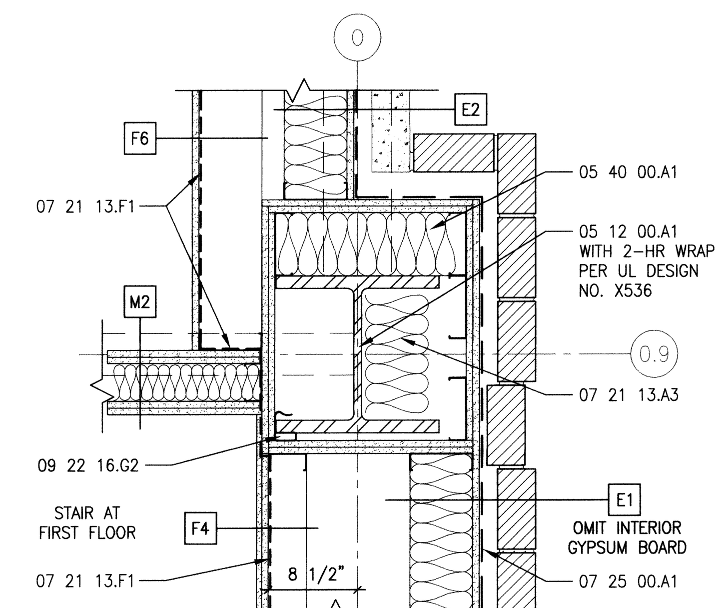

B5 COLUMN WRAP/MASONRY DTL
SCALE: 1" = 1'-0"

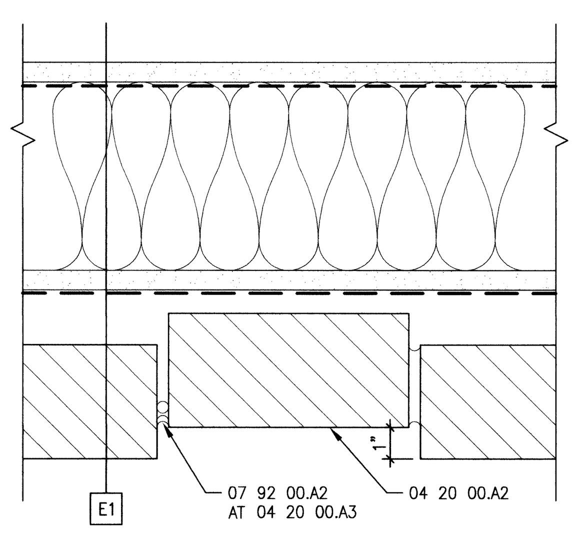

A1 MASONRY VERTICAL REVEAL
SCALE: 3" = 1'-0"

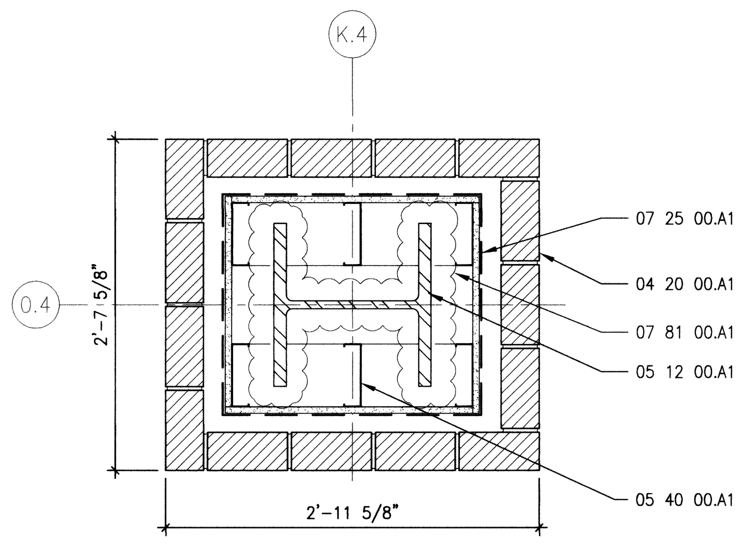

A2 BRICK COLUMN WRAP
SCALE: 1" = 1'-0"

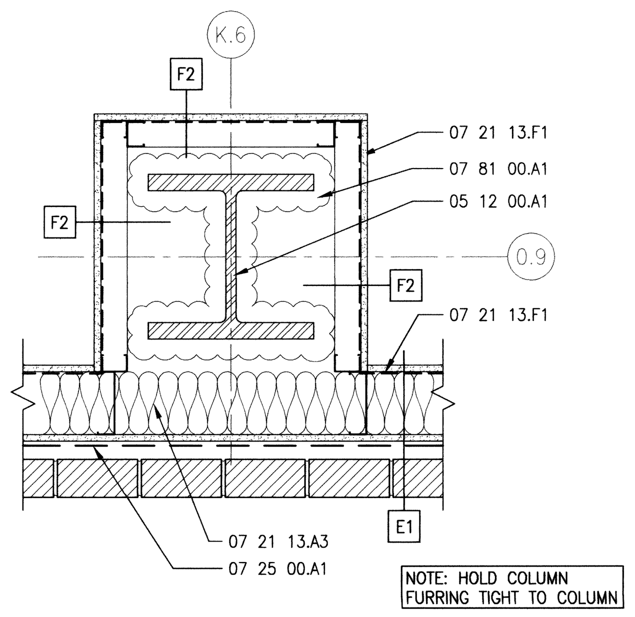

A3 COLUMN WRAP/MASONRY DTL
SCALE: 1" = 1'-0"

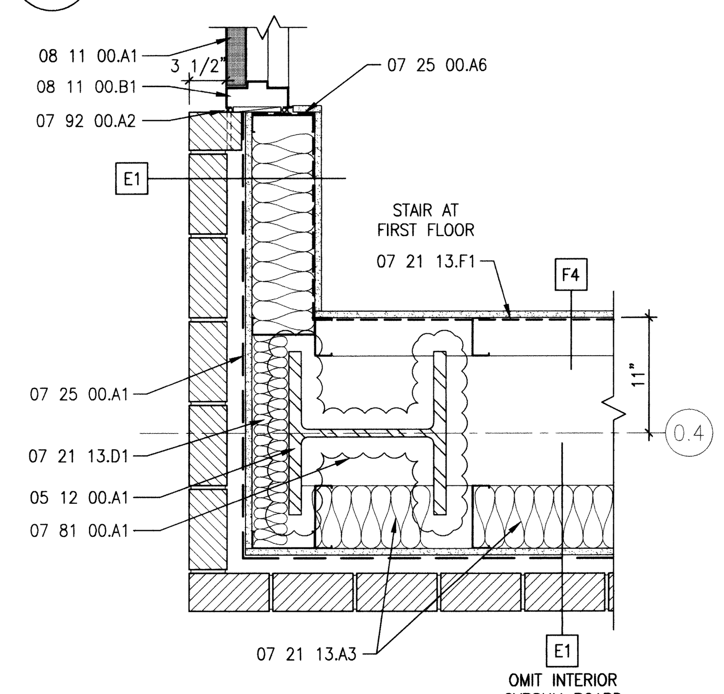

A4 COLUMN WRAP/MASONRY DTL
SCALE: 1" = 1'-0"

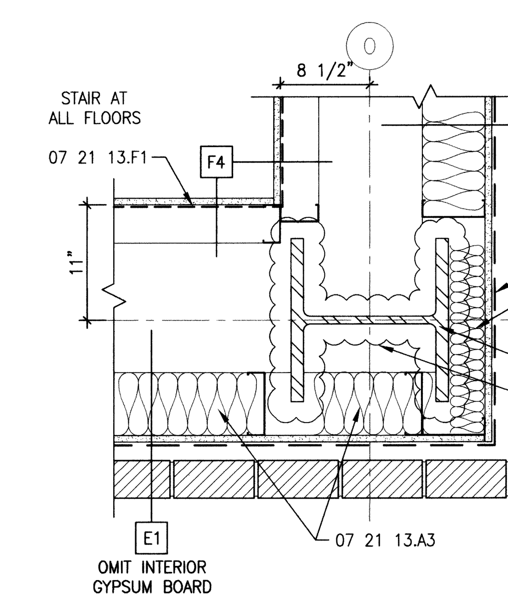

A5 COLUMN WRAP/MASONRY DTL
SCALE: 1" = 1'-0"

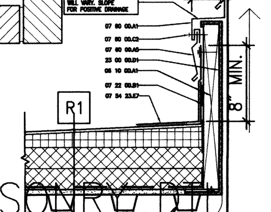

C2 ROOF CU[...]
SCALE: 3" = 1'-0"

REFERENCE KEYNOTES

DIVISION 03 – CONCRETE		
03 45 00.A1	–	PRECAST CONCRETE
03 45 00.B1	–	PRECAST CONNECTION BY PRECAST CONTRACTOR
03 45 00.C1	–	CHAMFER EACH SIDE – MATCH SIZE AND PROFILE OF EXISTING PRECAST
03 45 00.C2	–	DRIP RELIEF
DIVISION 04 – MASONRY		
04 20 00.A1	–	FACE BRICK VENEER
04 20 00.A2	–	WALL RECESS, SINGLE COLUMN OF MASONRY STACKED STRETCHERS
04 20 00.A3	–	MASONRY CONTROL JOINT
04 20 00.G1	–	REMOVE BRICK AS REQUIRED FOR INSTALLATION OF FOOTING SYSTEM. SALVAGE BRICK AND REINSTALL IN STACK BOND TO MATCH EXISTING CONFIGURATION
04 73 13.A1	–	MANUFACTURED STONE MASONRY VENEER
DIVISION 05 – METALS		
05 12 00.A1	–	STEEL COLUMN
05 12 00.A2	–	STEEL BEAM
05 31 00.A1	–	METAL DECK
05 31 00.B1	–	REINFORCE DECKING AT PENETRATION(S) PER 4/S4.5
05 40 00.A1	–	STEEL STUD PER STRUCTURAL
05 40 00.D1	–	LIGHT GAUGE ANGLE, 2 1/2X3X16GA.
05 40 00.E1	–	BUILT-UP NESTED TRACK SLEEPER AT 24" O.C. MAX. RUNNING PERPENDICULAR TO DECK FLUTES. (2) 400T125-30 MINIMUM WITH #10 SHEET METAL SCREWS EACH FLANGE AT 12" O.C. ATTACH TO TOP FLUTES OF METAL DECKING THROUGH DENS-DECK WITH #10 SHEET METAL SCREWS
05 40 00.E2	–	SLEEPERS ARE CONTINUOUS BETWEEN CURBS, EXTEND BEYOND CURBS MINIMUM ONE DECK FLUTE
05 40 00.E3	–	OMIT SLEEPERS AT SIM. CURB MAY BEAR DIRECTLY ON DECK.
DIVISION 06 – WOOD, PLASTICS, AND COMPOSITES		
06 10 00.A1	–	NAILER – FIRE RESISTIVE TREATED
DIVISION 07 – THERMAL AND MOISTURE PROTECTION		
07 21 13.A3	–	R-19 BATT INSULATION – UNFACED
07 21 13.A5	–	R-30 BATT INSULATION – FACED
07 21 13.D1	–	FILL WITH INSULATION
07 21 13.F1	–	VAPOR BARRIER
07 22 00.B1	–	VAPOR RETARDER
07 25 00.A1	–	WEATHER BARRIER
07 25 00.A3	–	SELF-ADHERING FLEXIBLE FLASHING INSTALLED PER DETAIL D2/A7.2
07 25 00.A5	–	SECURE EDGE OF WEATHER BARRIER BEHIND EXPANSION JOINT COVER
07 25 00.A6	–	OVERLAP WEATHER BARRIER AND VAPOR BARRIER A MINIMUM OF 4"
07 40 00.C1	–	PRE-FINISHED METAL SOFFIT PANELS – VENTED
07 54 23.C1	–	TERMINATION BAR
07 54 23.E7	–	SELF-ADHERING FLASHING MEMBRANE, LAP ROOF MEMBRANE A MINIMUM OF 6"
07 60 00.A1	–	PREFINISHED SHEET METAL FLASHING
07 60 00.A5	–	PREFINISHED COUNTER-FLASHING
07 60 00.C2	–	FASTENER WITH NEOPRENE WASHER
07 81 00.A1	–	SPRAYED-ON FIREPROOFING
07 92 00.A1	–	SEALANT
07 92 00.A2	–	SEALANT OVER BACKER ROD
07 95 13.B1	–	EXTERIOR WALL EXPANSION JOINT COVER
DIVISION 08 – OPENINGS		
08 11 00.A1	–	HOLLOW METAL DOOR
08 11 00.B1	–	HOLLOW METAL FRAME
08 41 13.A1	–	ALUMINIMUM STOREFRONT SYSTEM
DIVISION 09 – FINISHES		
09 06 00.A2	–	CEILING AS SCHEDULED
09 22 16.C1	–	STEEL STUDS – 362S125-30 AT 16" O.C.
09 22 16.G2	–	COLUMN DRYWALL CLIPS AT 48" O.C. AND 1-1/4" FROM TOP AND BOTTOM OF COLUMN
09 29 00.A2	–	GYPSUM BOARD – 5/8"
09 29 00.B2	–	GYPSUM SHEATHING BOARD – 5/8"
DIVISION 23 – HEATING, VENTILATING, AND AIR-CONDITIONING (HVAC)		
23 00 00.A1	–	HVAC EQUIPMENT – SEE MECHANICAL
23 00 00.D1	–	MECHANICAL ROOF CURB – SEE MECHANICAL
23 00 00.D2	–	ROOF TOP DUCT – SEE MECHANICAL

FOR CONSTRUCTION

REVISIONS	DATE

LICENSED ARCHITECT, BOISE, IDAHO, AR-1885, NOV. 1, 2011, STATE OF IDAHO, STEVEN C. TURNEY

ZGA Architects and Planners, Chartered
565 W. Myrtle Street, Suite 225 Boise, Idaho 83702-7606

CAD FILE NAME: 531-317_A7.1.dwg
XREF FILE NAME: 531-317_xVAbord.dwg, 531-317_d013.dwg, d014, d015, d016, d017, d019, d021, d022, d026, d027, d032, d039, d059

DRAWING TITLE: EXTERIOR DETAILS
APPROVED: CHIEF OF FACILITY MANAGEMENT SERVICE
APPROVED: MEDICAL CENTER DIRECTOR

PROJECT TITLE: REPLACE AND MODERNIZE SURGERY / INTENSIVE CARE UNIT
BUILDING NUMBER: 85
CHECKED: ST
DRAWN: SM/BB
LOCATION: VAMC BOISE, IDAHO

DATE: 11/01/2011
PROJECT NO.: 531-317
DRAWING NO.: A7.1
DWG 36 OF 188

DEPARTMENT OF VETERANS AFFAIRS

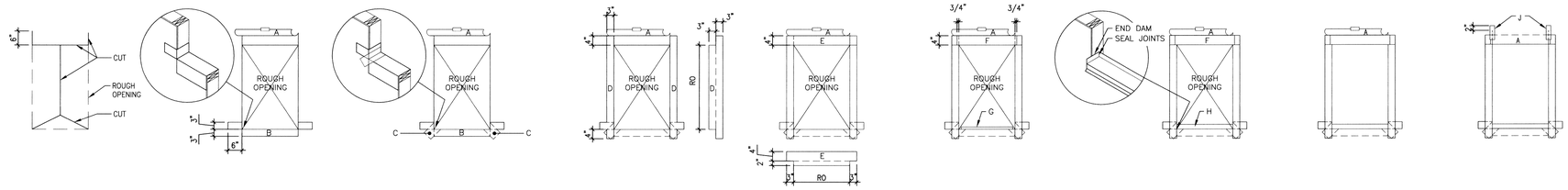

FIG. 1

INSTALL WEATHER BARRIER OVER ROUGH OPENING. CUT WEATHER BARRIER AS INDICATED. FOLD WEATHER BARRIER IN AT SILL AND JAMBS AND SECURE. OMIT WEATHER BARRIER AT SIMILAR.

FIG. 2

ROLL WEATHER BARRIER "A" UP AT HEAD AND TEMPORARILY HOLD IN PLACE WITH TAPE. INSTALL SELF-ADHERING FLEXIBLE FLASHING "B", FOLDED ONTO SILL ROUGH OPENING. EXTEND UP JAMB 3" MIN.

FIG. 3

INSTALL 4" WIDE SELF-ADHERING FLEXIBLE BUTTERFLY FLASHING PIECE "C" AT LOWER CORNERS OF OPENING. START AT THE INTERIOR SURFACE OF THE OPENING, OVER THE SILL FLASHING, THEN FOLDED OVER THE EXTERIOR SURFACES OF THE SILL FLASHING AND PRESSED INTO PLACE.

FIG. 4

INSTALL SELF-ADHERING FLEXIBLE FLASHING "D" AT JAMBS, FOLDED ONTO JAMB ROUGH OPENING.

FIG. 5

INSTALL SELF-ADHERING FLEXIBLE FLASHING "E" AT HEAD, FOLDED ONTO HEAD ROUGH OPENING.

FIG. 6

INSTALL METAL DRIP FLASHING "F" AT HEAD. INSTALL CONTINUOUS SILL SUPPORT "G" AS REQUIRED BY MANUFACTURER OF ITEM TO BE INSTALLED.

FIG. 7

INSTALL METAL SILL FLASHING "H". MATERIAL TO BE COMPATIBLE WITH ITEM TO BE INSTALLED. SET IN MASTIC WITH FASTENERS WITHIN 6" OF ENDS AND AT 24" OC. BACK PANEL AND END DAMS TO TURN UP 1" WITH CORNER JOINTS SEALED.

FIG. 8

INSTALL ITEM (WINDOW, LOUVER, ETC) (NOT SHOWN). INSTALL SEALANT AROUND ITEM PER DETAILS.

FIG. 9

RELEASE WEATHER BARRIER "A" SO THAT IT LAPS OVER DRIP FLASHING "F" AT HEAD. TRIM IF NECESSARY. INSTALL SELF-ADHERING FLEXIBLE FLASHING "J". INSTALL EXTERIOR FINISH MATERIALS.

D2 EXTERIOR OPENING FLASHING
SCALE: 1/2" = 1'-0"

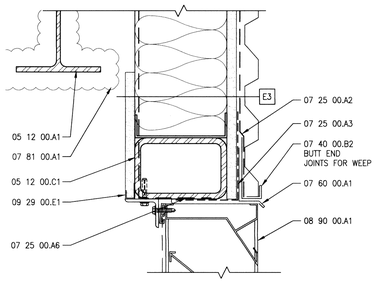

C2 LOUVER HEAD DETAIL
SCALE: 3" = 1'-0"

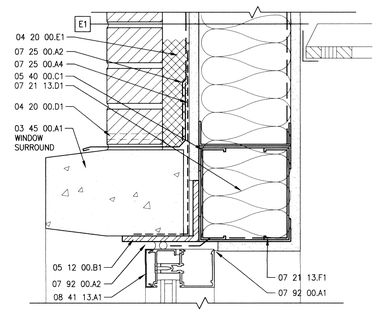

C3 WINDOW HEAD DETAIL
SCALE: 3" = 1'-0"

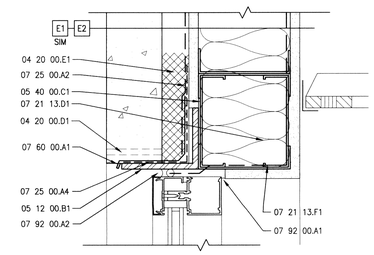

C4 WINDOW HEAD DETAIL
SCALE: 3" = 1'-0"

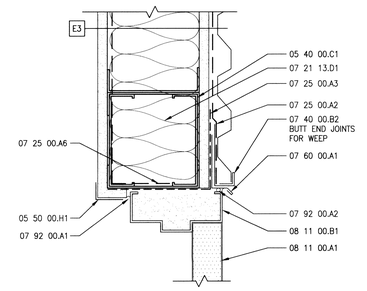

C5 HATCH HEAD DETAIL
SCALE: 3" = 1'-0"

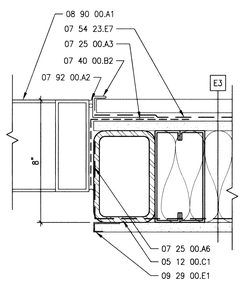

B2 LOUVER JAMB DETAIL
SCALE: 3" = 1'-0"

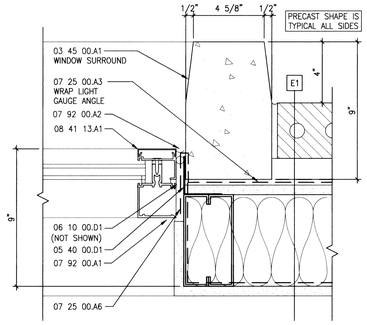

B3 WINDOW JAMB DETAIL
SCALE: 3" = 1'-0"

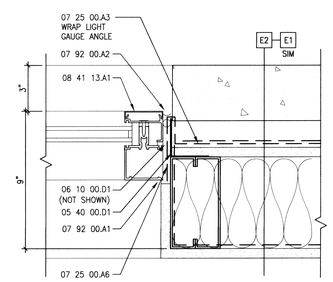

B4 WINDOW JAMB DETAIL
SCALE: 3" = 1'-0"

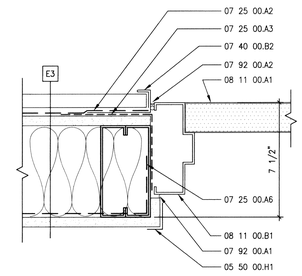

B5 HATCH JAMB DETAIL
SCALE: 3" = 1'-0"

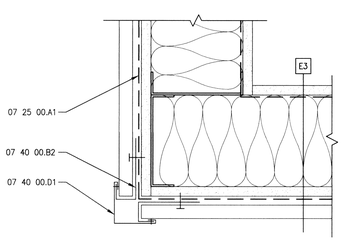

A1 METAL PANEL OUTSIDE CORNER DETAIL
SCALE: 3" = 1'-0"

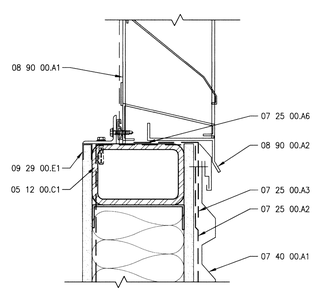

A2 LOUVER SILL DETAIL
SCALE: 3" = 1'-0"

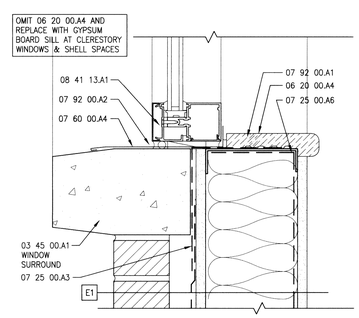

A3 WINDOW SILL DETAIL
SCALE: 3" = 1'-0"

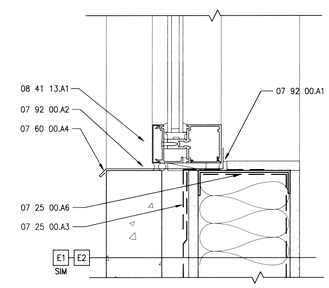

A4 WINDOW SILL DETAIL
SCALE: 3" = 1'-0"

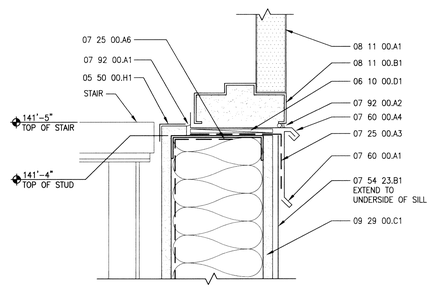

A5 HATCH SILL DETAIL
SCALE: 3" = 1'-0"

GENERAL SHEET NOTES

A. PROVIDE METAL PANEL MANUFACTURER'S STANDARD DETAILING AT EDGES AND PUNCHED OPENINGS.

B. SEE TYPICAL EXTERIOR DETAIL OPENING FLASHING D2/A7.2 FOR SUPPLEMENTAL FLASHING REQUIREMENTS.

REFERENCE KEYNOTES

DIVISION 03 – CONCRETE	
03 45 00.A1	– PRECAST CONCRETE
DIVISION 04 – MASONRY	
04 20 00.D1	– WEEP HOLE WICKS AT 24" OC
04 20 00.E1	– MORTAR DROPPING PROTECTION
DIVISION 05 – METALS	
05 12 00.A1	– STEEL COLUMN
05 12 00.B3	– STEEL BENT PLATE
05 12 00.C1	– TUBE STEEL
05 40 00.C1	– BOXED HEADER – SEE STRUCTURAL FOR SIZING
05 40 00.D1	– LIGHT GAUGE ANGLE, 2 1/2X3X16GA.
05 50 00.H1	– STAINLESS STEEL ANGLE TRIM
DIVISION 06 – WOOD, PLASTICS, AND COMPOSITES	
06 10 00.D1	– SHIM
06 20 00.A4	– SOLID SURFACE SILL
DIVISION 07 – THERMAL AND MOISTURE PROTECTION	
07 21 13.D1	– FILL WITH INSULATION
07 21 13.F1	– VAPOR BARRIER
07 25 00.A1	– WEATHER BARRIER
07 25 00.A2	– LAP WEATHER BARRIER A MINIMUM OF 4" OVER FLASHING
07 25 00.A3	– SELF-ADHERING FLEXIBLE FLASHING INSTALLED PER DETAIL D2/A7.2
07 25 00.A4	– SELF-ADHERED FLEXIBLE FLASHING, EXTEND TO WITHIN 1" OF EDGE OF STEEL ANGLE
07 25 00.A6	– OVERLAP WEATHER BARRIER AND VAPOR BARRIER A MINIMUM OF 4"
07 40 00.A1	– PRE-FINISHED METAL WALL PANELS
07 40 00.B2	– CHANNEL CLOSURE
07 54 23.A1	– TPO MEMBRANE ROOFING
07 60 00.A1	– PREFINISHED SHEET METAL FLASHING
07 60 00.A4	– PREFINISHED SILL FLASHING, WRAP TO INSIDE OF FRAME WITH 1" TURNED UP LEG
07 40 00.D1	– PREFINISHED CORNER TRIM
07 81 00.A1	– SPRAYED-ON FIREPROOFING
07 92 00.A1	– SEALANT
07 92 00.A2	– SEALANT OVER BACKER ROD
DIVISION 08 – OPENINGS	
08 11 00.A1	– HOLLOW METAL DOOR
08 11 00.B1	– HOLLOW METAL FRAME
08 41 13.A1	– ALUMINIMUM STOREFRONT SYSTEM
08 90 00.A1	– LOUVER – SEE MECHANICAL
08 90 00.A2	– LOUVER EXTENDED SILL
DIVISION 09 – FINISHES	
09 29 00.C1	– GLASS-MAT WATER-RESISTANT BACKING BOARD
09 29 00.E1	– J-BEAD

REVISIONS | DATE

LICENSED ARCHITECT — JAMES L. CARTER — AR-1885 — 10/31/2011 — STATE OF IDAHO

ZGA. Architects and Planners, Chartered
565 W. Myrtle Street, Suite 225 Boise, Idaho 83702-7606

CAD FILE NAME: 531-317_A7.2.dwg
XREF FILE NAME: 85ASD.dwg 531-317_xVAbord.dwg

DRAWING TITLE: DOOR AND WINDOW DETAILS

APPROVED: CHIEF OF FACILITY MANAGEMENT SERVICE

APPROVED: MEDICAL CENTER DIRECTOR

PROJECT TITLE: REPLACE AND MODERNIZE SURGERY / INTENSIVE CARE UNIT

BUILDING NUMBER: 85 | CHECKED: ST | DRAWN: SM

LOCATION: VAMC BOISE, IDAHO

DATE: 11/01/2011

PROJECT NO.: 531-317

DRAWING NO.: A7.2

DWG 37 OF 188

FOR CONSTRUCTION

DEPARTMENT OF VETERANS AFFAIRS

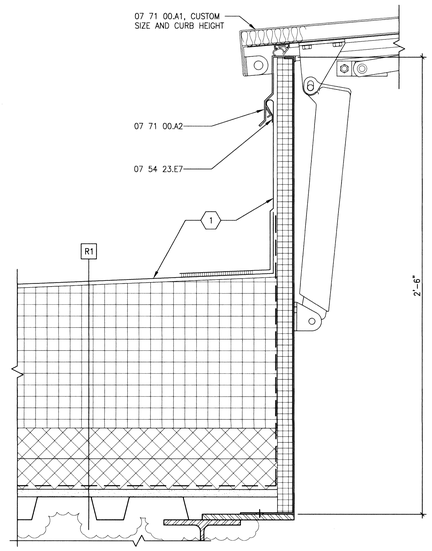

B1 EQUIPMENT HATCH CURB
SCALE: 3" = 1'-0"

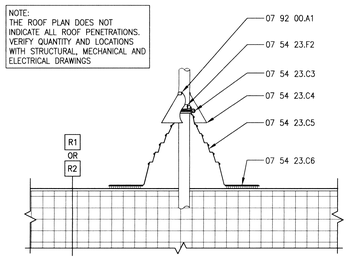

C3 TYPICAL ROUND PENETRATION
SCALE: 3" = 1'-0"

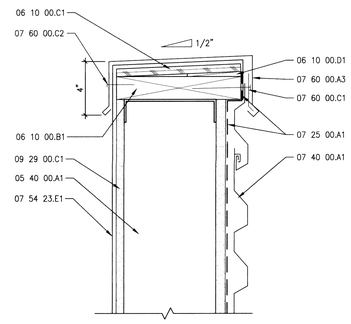

C4 PARAPET DETAIL
SCALE: 3" = 1'-0"

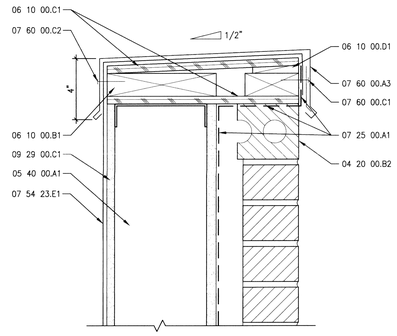

C5 PARAPET DETAIL
SCALE: 3" = 1'-0"

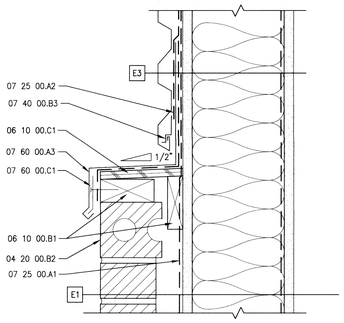

B3 BRICK-TO-METAL PANEL DETAIL
SCALE: 3" = 1'-0"

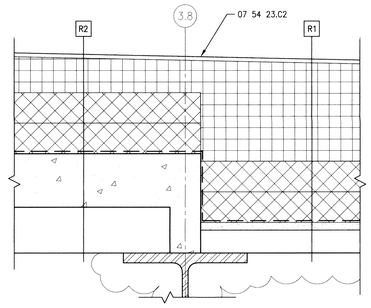

B4 DECKING TRANSITION DETAIL
SCALE: 3" = 1'-0"

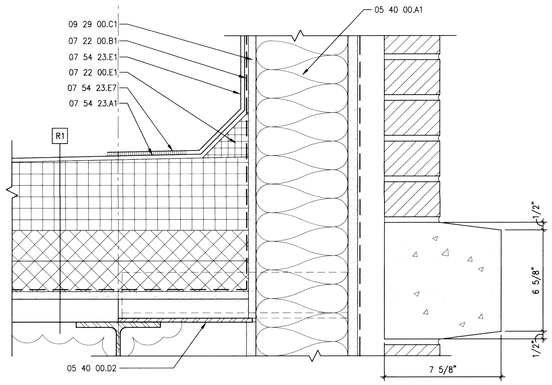

B5 ROOF/WALL DETAIL - TYPICAL
SCALE: 3" = 1'-0"

GENERAL SHEET NOTES

A. PROVIDE ROOF MEMBRANE MANUFACTURER STANDARD DETAILING AT ALL LAPS, SEAMS, PERIMETERS, TERMINATIONS, AND INTERSECTIONS.

REFERENCE KEYNOTES

DIVISION 04 - MASONRY		
04 20 00.B2	-	ROWLOCK COURSE
DIVISION 05 - METALS		
05 12 00.B2	-	STEEL PLATE
05 40 00.A1	-	STEEL STUD PER STRUCTURAL
05 40 00.D2	-	LIGHT GAUGE ANGLE, PER STRUCTURAL
DIVISION 06 - WOOD, PLASTICS, AND COMPOSITES		
06 10 00.B1	-	BLOCKING - FIRE RESISTIVE TREATED
06 10 00.C1	-	PLYWOOD - 1/2" - FIRE RESISTIVE TREATED
06 10 00.D1	-	SHIM
DIVISION 07 - THERMAL AND MOISTURE PROTECTION		
07 21 13.A3	-	R-19 BATT INSULATION - UNFACED
07 21 13.F2	-	OVERLAP VAPOR BARRIER AND ROOF MEMBRANE FLASHING A MINIMUM OF 4"
07 22 00.B1	-	VAPOR RETARDER
07 22 00.E1	-	CANT STRIP IF REQUIRED BY MANUFACTURER
07 25 00.A1	-	WEATHER BARRIER
07 25 00.A2	-	LAP WEATHER BARRIER A MINIMUM OF 4" OVER FLASHING
07 25 00.A7	-	OVERLAP WEATHER BARRIER AND MEMBRANE A MINIMUM OF 4"
07 40 00.A1	-	PRE-FINISHED METAL WALL PANELS
07 40 00.B1	-	METAL WALL PANEL FLASHING/TRIM
07 40 00.B3	-	CONTINUOUS STARTER CLEAT
07 54 23.A1	-	TPO MEMBRANE ROOFING
07 54 23.C1	-	TERMINATION BAR
07 54 23.C2	-	SLIP SHEET
07 54 23.C3	-	STAINLESS STEEL CLAMP RING
07 54 23.C4	-	METAL HOOD
07 54 23.C5	-	MANUFACTURER'S PREMOLDED PIPE FLASHING
07 54 23.C6	-	SEAM PER MANUFACTURER
07 54 23.E1	-	CONTINUE MEMBRANE FLASHING OVER TOP OF PARAPET AND 2" (MIN) DOWN EXTERIOR FACE LAPPING OVER WEATHER BARRIER
07 54 23.E3	-	CONTINUE MEMBRANE FLASHING TO UNDERSIDE OF EXPANSION JOINT COVER ASSEMBLY
07 54 23.E4	-	CONTINUE MEMBRANE FLASHING OVER TOP OF WOOD BLOCKING
07 54 23.E5	-	DRAPE MEMBRANE FLASHING AS SHOWN
07 54 23.E7	-	SELF-ADHERING FLASHING MEMBRANE, LAP ROOF MEMBRANE A MINIMUM OF 6"
07 54 23.F2	-	CONTINUOUS BEAD OF LAP SEALANT
07 60 00.A3	-	PREFINISHED METAL COPING
07 60 00.A4	-	PREFINISHED SILL FLASHING, WRAP TO INSIDE OF FRAME WITH 1" TURNED UP LEG
07 60 00.A5	-	PREFINISHED COUNTER-FLASHING
07 60 00.C1	-	SHEET METAL CLEAT - CONTINUOUS
07 60 00.C2	-	FASTENER WITH NEOPRENE WASHER
07 71 00.A1	-	ROOF HATCH/SCUTTLE
07 71 00.A2	-	MANUFACTURER'S FLASHING CLIP
07 92 00.A1	-	SEALANT
07 95 13.B2	-	EXTERIOR WALL-TO-ROOF EXPANSION JOINT COVER
07 95 13.B3	-	ROOF-TO-ROOF EXPANSION JOINT COVER
DIVISION 08 - OPENINGS		
08 63 00.A1	-	ALUMINUM-FRAMED SKYLIGHT
08 63 00.B1	-	INSULATED TRANSLUCENT SKYLIGHT PANEL
DIVISION 09 - FINISHES		
09 29 00.C1	-	GLASS-MAT WATER-RESISTANT BACKING BOARD

SHEET KEYNOTES

1. SEE B5/A7.3 FOR TYPICAL ROOF/WALL DETAIL
2. EXISTING PORTION OF PARAPET TO REMAIN

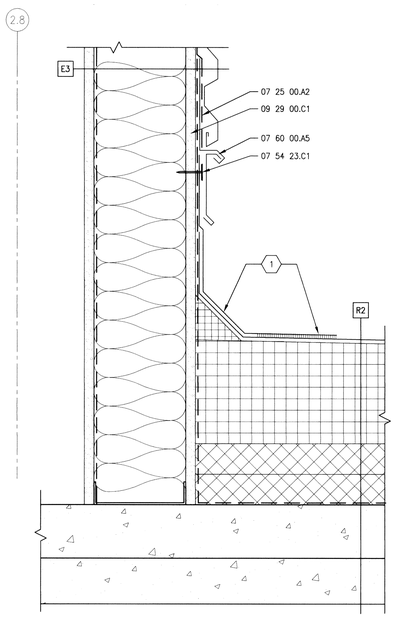

A1 ROOF/WALL DETAIL
SCALE: 3" = 1'-0"

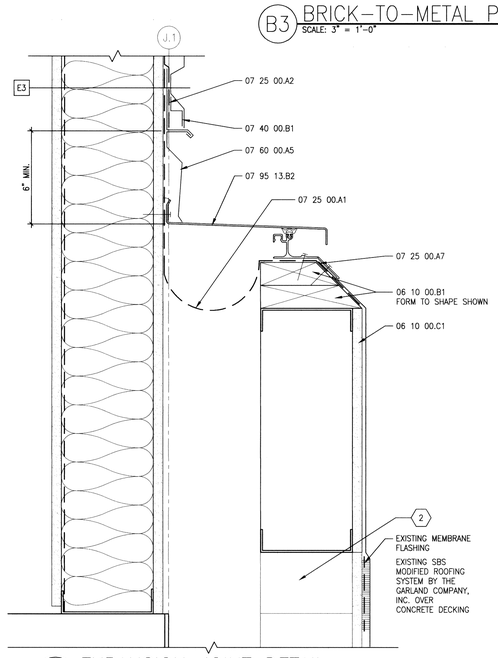

A2 EXPANSION JOINT DETAIL
SCALE: 3" = 1'-0"

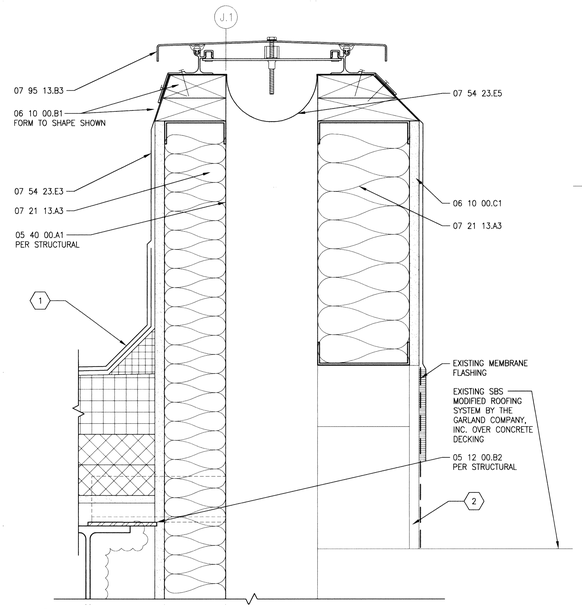

A3 EXPANSION JOINT DETAIL
SCALE: 3" = 1'-0"

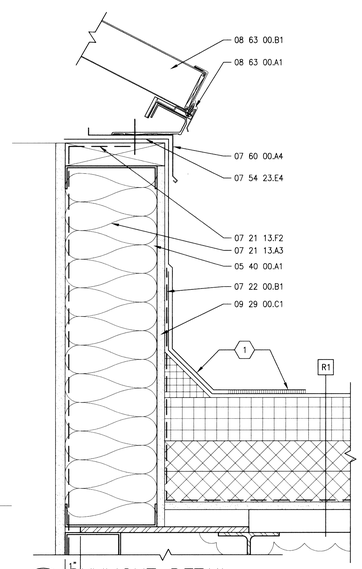

A4 SKYLIGHT DETAIL
SCALE: 3" = 1'-0"

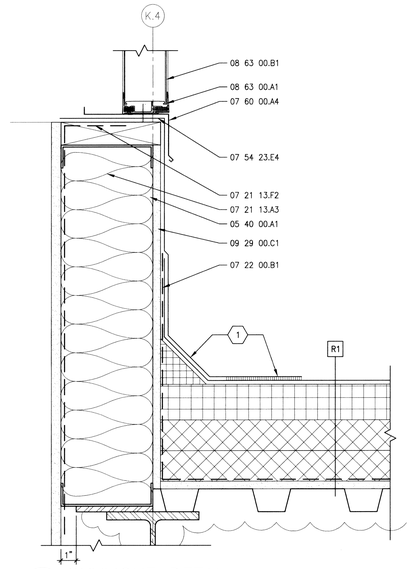

A5 SKYLIGHT DETAIL
SCALE: 3" = 1'-0"

REVISIONS	DATE

LICENSED ARCHITECT
STATE OF IDAHO
STEPHEN C. TURNER

ZSA. Architects and Planners, Chartered
565 W. Myrtle Street, Suite 225 Boise, Idaho 83702-7606

CAD FILE NAME: 531-317_A7.3.dwg
XREF FILE NAME: 531-317_xVAbord.dwg

DRAWING TITLE: ROOF DETAILS

PROJECT TITLE: REPLACE AND MODERNIZE SURGERY / INTENSIVE CARE UNIT

DATE: 11/01/2011
PROJECT NO. 531-317

APPROVED: CHIEF OF FACILITY MANAGEMENT SERVICE
APPROVED: MEDICAL CENTER DIRECTOR

BUILDING NUMBER: 85
CHECKED: ST
DRAWN: SM
LOCATION: VAMC BOISE, IDAHO

DRAWING NO. A7.3

FOR CONSTRUCTION

DEPARTMENT OF VETERANS AFFAIRS

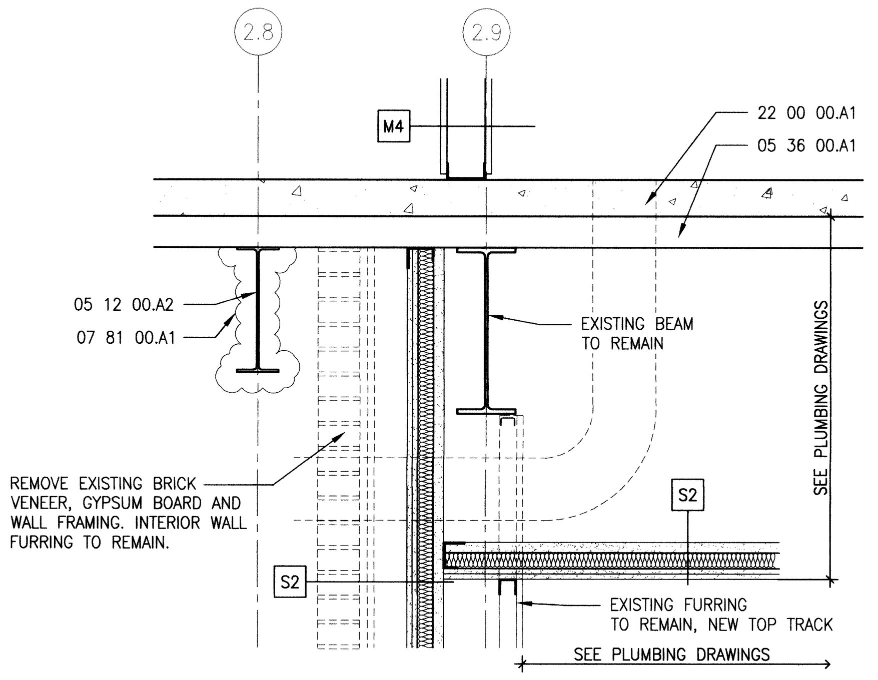

E1 2-HR. RATED ENCLOSURE
SCALE: 1" = 1'-0"

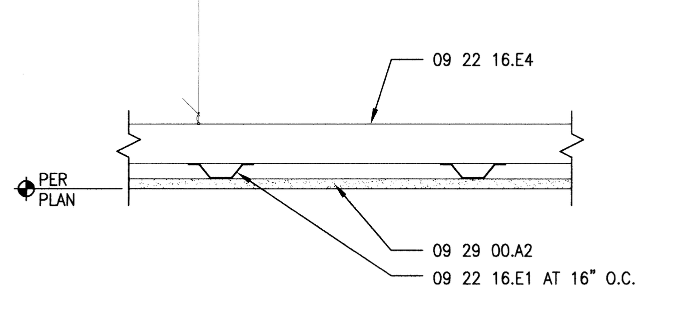

D2 GYPSUM BOARD CEILING
SCALE: 1-1/2" = 1'-0"

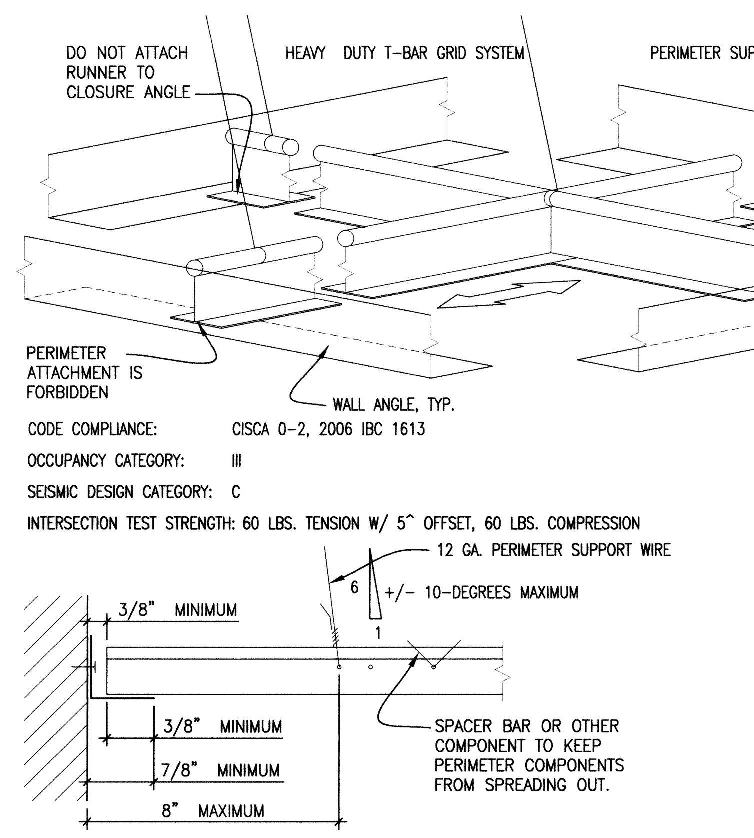

D3 SUSPENDED ACOUSTIC PANEL SYSTEM-TYPICAL
SCALE: 3" = 1'-0"

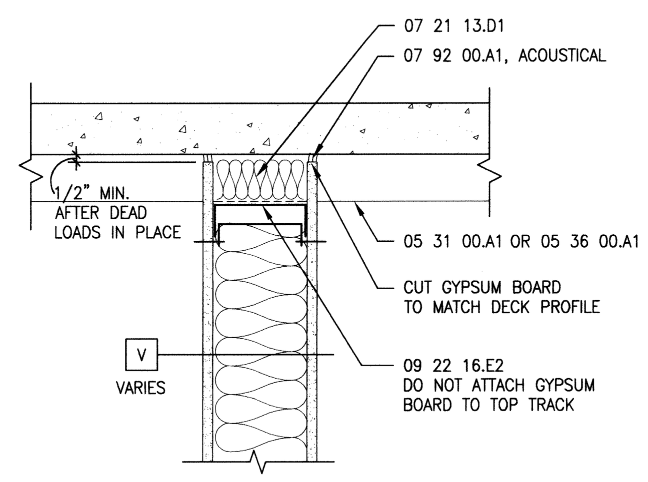

D4 FULL HEIGHT PARTITION
SCALE: 1-1/2" = 1'-0"

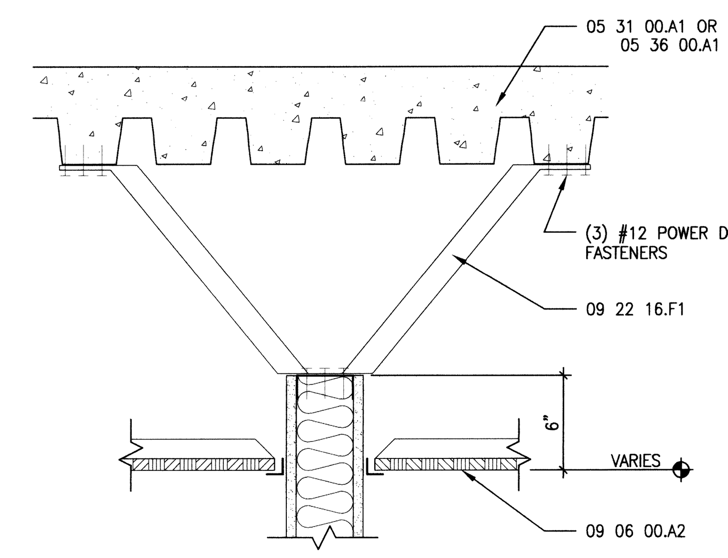

D5 PARTIAL HEIGHT PARTITION
SCALE: 1-1/2" = 1'-0"

REFERENCE KEYNOTES	
DIVISION 05 - METALS	
05 12 00.A1	- STEEL COLUMN
05 12 00.A2	- STEEL BEAM
05 12 00.B3	- STEEL BENT PLATE
05 31 00.A1	- METAL DECK
05 36 00.A1	- COMPOSITE METAL DECKING
05 40 00.D1	- LIGHT GAUGE ANGLE, 2 1/2x3x16GA.
05 50 00.J1	- BOOM SUPPORT - SEE STRUCTURAL
DIVISION 06 - WOOD, PLASTICS, AND COMPOSITES	
06 10 00.D1	- SHIM
06 16 63.A1	- CEMENTITIOUS SHEATHING - 1/2"
06 16 63.B1	- WATERPROOF MEMBRANE
DIVISION 07 - THERMAL AND MOISTURE PROTECTION	
07 21 13.D1	- FILL WITH INSULATION
07 81 00.A1	- SPRAYED-ON FIREPROOFING
07 84 00.A3	- FIRE-RESISTIVE JOINT SYSTEM
07 92 00.A1	- SEALANT
07 95 13.A1	- FLOOR-TO-FLOOR EXPANSION JOINT COVER
07 95 13.A3	- INTERIOR WALL EXPANSION JOINT COVER
07 95 13.A4	- CEILING EXPANSION JOINT COVER
DIVISION 08 - OPENINGS	
08 11 00.B1	- HOLLOW METAL FRAME
08 14 00.A1	- SOLID CORE WOOD DOOR
DIVISION 09 - FINISHES	
09 06 00.A2	- CEILING AS SCHEDULED
09 22 16.C1	- STEEL STUDS - 362S125-30 AT 16" O.C.
09 22 16.E1	- 7/8" HAT CHANNEL
09 22 16.E2	- DEEP-LEG DEFLECTION TRACK
09 22 16.E4	- 2 1/2" CARRYING CHANNELS AT 48" O.C.
09 22 16.E5	- LIGHT GAUGE ANGLE, CONTINUOUS
09 22 16.F1	- DIAGONALLY BRACE STUDS TO STRUCTURE ABOVE; 18 GAUGE MIN. AT 8'-0" O.C. STAGGERED AND AT DOOR JAMBS
09 22 16.F2	- METAL STUD BRACING AT 24" O.C. ATTACH TO CEILING GRID
09 22 16.G2	- COLUMN DRYWALL CLIPS AT 48" O.C. AND 1-1/4" FROM TOP AND BOTTOM OF COLUMN
09 22 16.J1	- STEEL JOIST - 362S125-30 AT 24" O.C.
09 22 16.X1	- STEEL STUDS PER WALL ASSEMBLY
09 29 00.A1	- GYPSUM BOARD - 1/2"
09 29 00.A2	- GYPSUM BOARD - 5/8"
09 29 00.C1	- GLASS-MAT WATER-RESISTANT BACKING BOARD
09 29 00.C2	- 2" GLASS FIBER TAPE
09 30 13.B1	- CERAMIC TILE
09 30 13.C1	- BOND COAT
09 30 13.C2	- REINFORCED MORTAR BED
09 30 13.C3	- SLOPED FILL
09 30 13.C4	- PEA GRAVEL OR OTHER WEEP PROTECTION
09 30 13.D2	- SHOWER PAN MEMBRANE
09 51 00.A1	- ACOUSTICAL CEILING TILE SYSTEM
09 51 00.B1	- METAL SUSPENSION SYSTEM
DIVISION 10 - SPECIALTIES	
10 21 23.A1	- CUBICLE CURTAIN TRACK SYSTEM
DIVISION 22 - PLUMBING	
22 00 00.A1	- PLUMBING - SEE MECHANICAL
DIVISION 23 - HEATING, VENTILATING, AND AIR-CONDITIONING (HVAC)	
23 00 00.A1	- HVAC EQUIPMENT - SEE MECHANICAL
23 00 00.B1	- SHEET METAL DUCT LINER APPLIED TO FACE OF GYPSUM BOARD - SEE MECHANICAL
23 00 00.B2	- SHEET METAL DUCT LINER BETWEEN LAYERS OF GYPSUM BOARD - SEE MECHANICAL
23 00 00.C1	- 2" PLENUM CEILING - SEE MECHANICAL

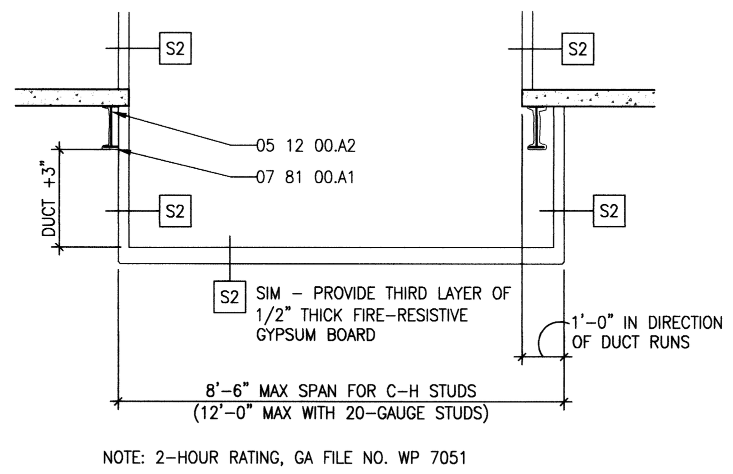

D1 BOTTOM OF SHAFT
SCALE: N.T.S.

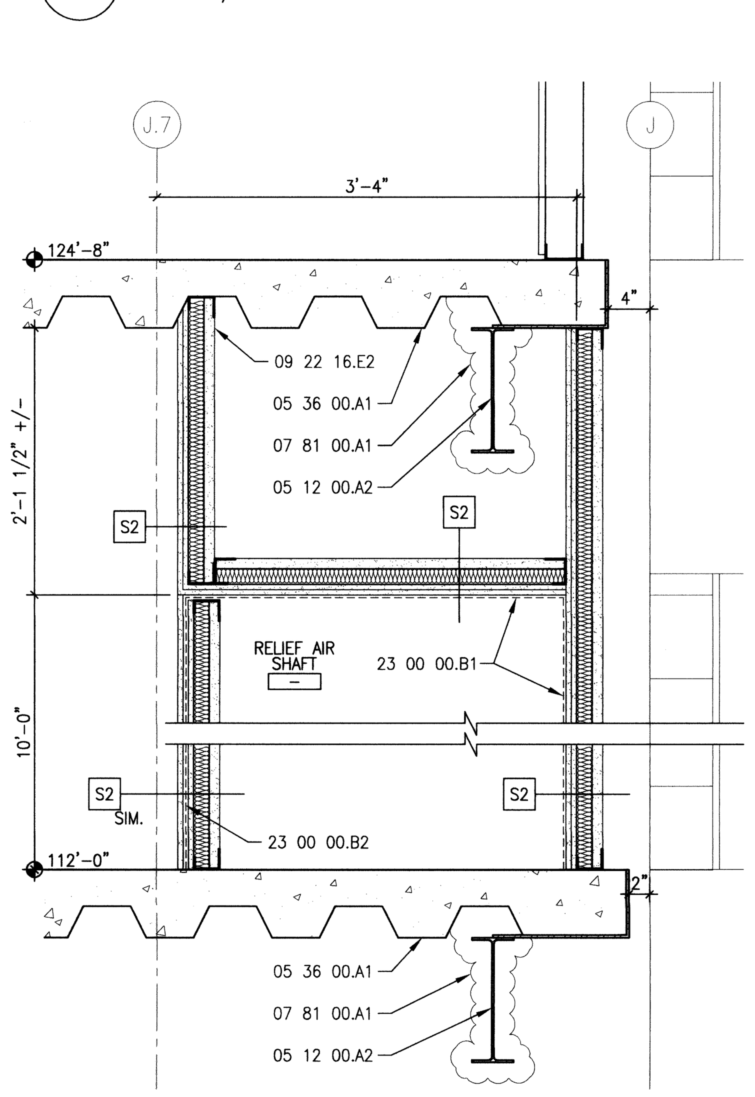

C2 RELIEF AIR SHAFT
SCALE: 1" = 1'-0"

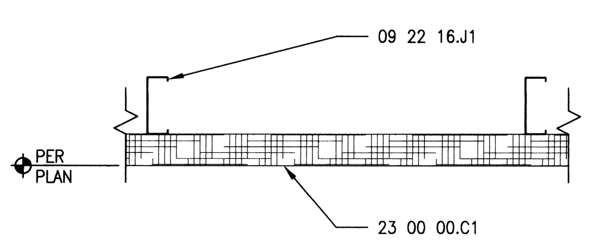

C1 PLENUM CEILING
SCALE: 1-1/2" = 1'-0"

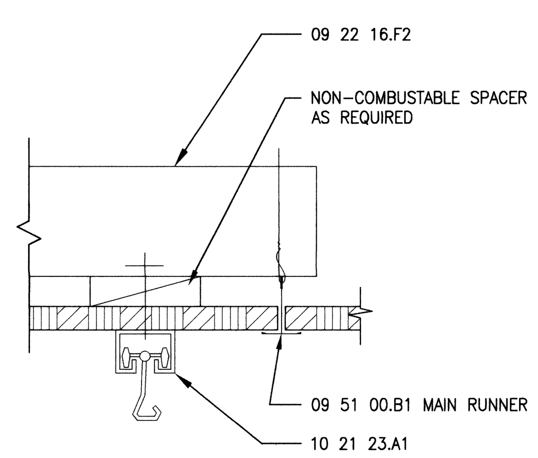

C3 CURTAIN TRACK
SCALE: 3" = 1'-0"

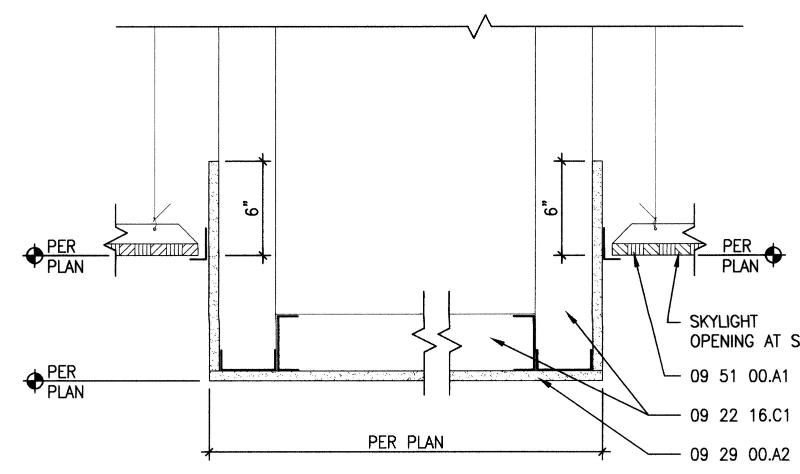

C4 SOFFIT SECTION - TYPICAL
SCALE: 1-1/2" = 1'-0"

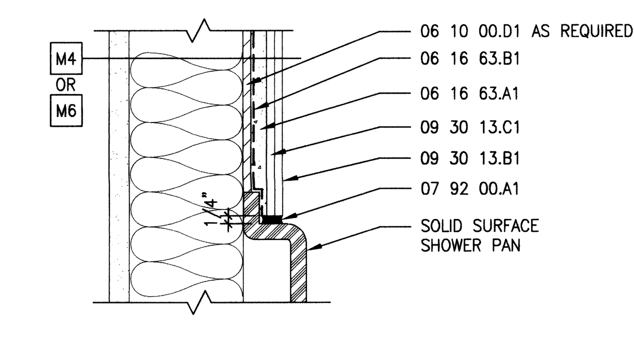

C5 TILE-TO-SHOWER PAN TCA# B412-09
SCALE: 3" = 1'-0" TOILET 112K

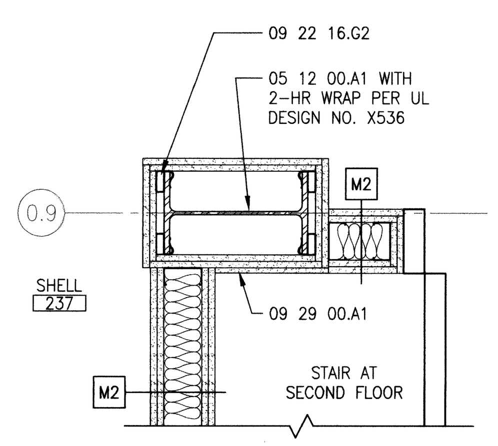

B1 COLUMN AT STAIR
SCALE: 1" = 1'-0"

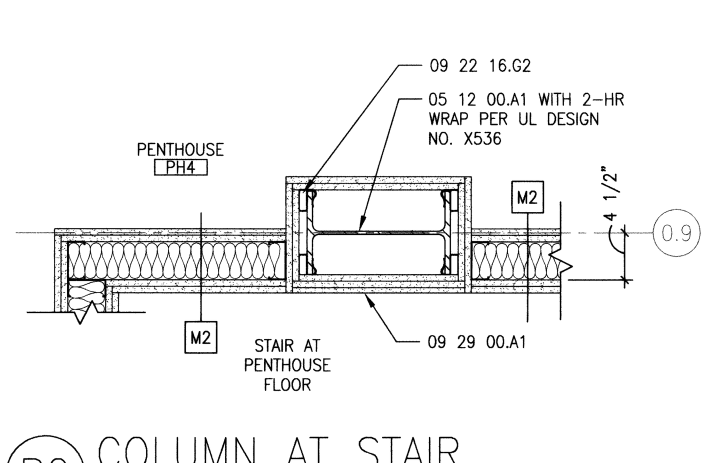

B2 COLUMN AT STAIR
SCALE: 1" = 1'-0"

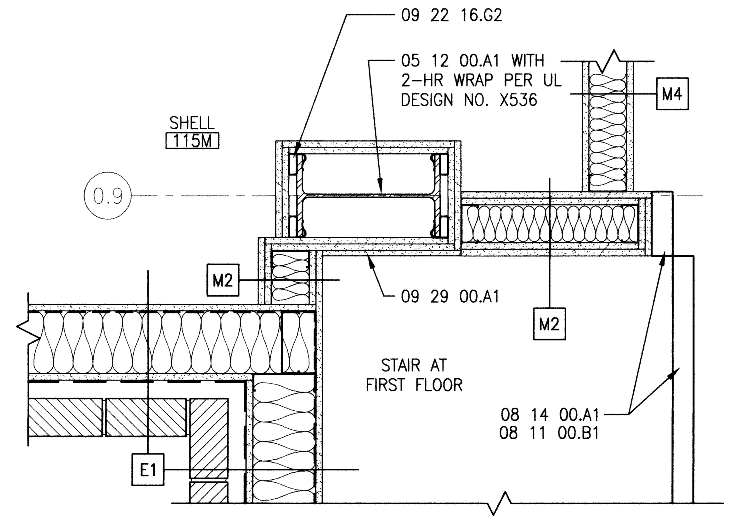

B3 COLUMN AT STAIR
SCALE: 1" = 1'-0"

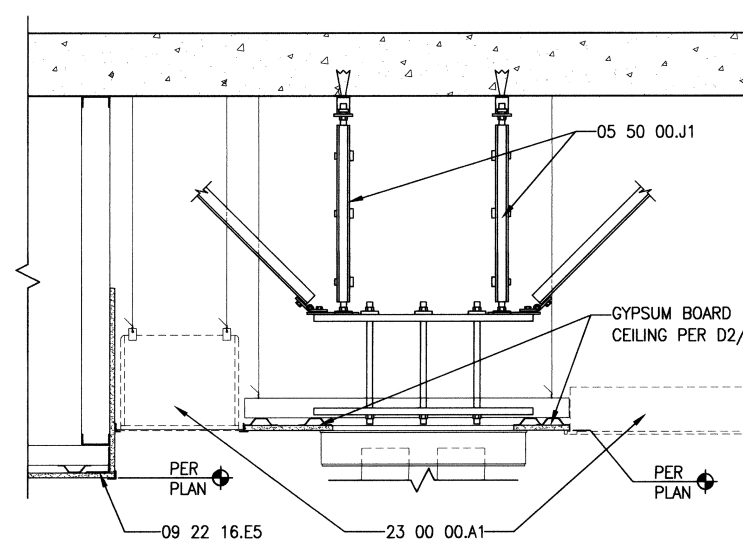

B4 O.R. CEILING SECTION
SCALE: 3/4" = 1'-0"

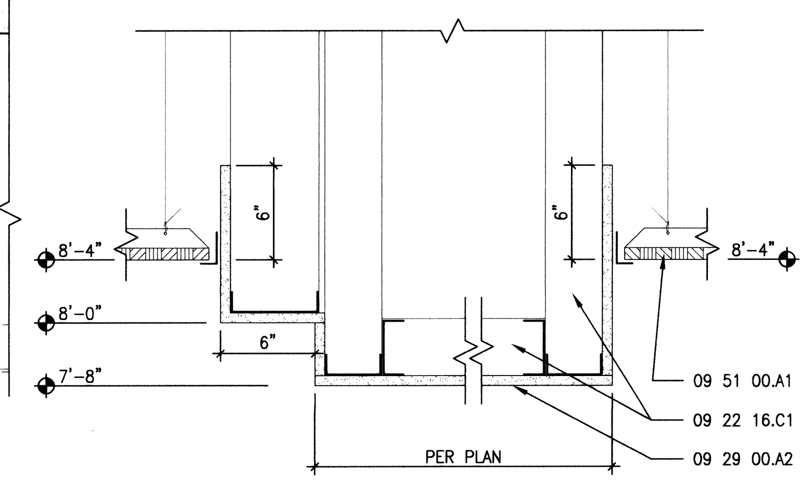

B5 ADMITTING/CHECK-IN SOFFIT
SCALE: 1-1/2" = 1'-0"

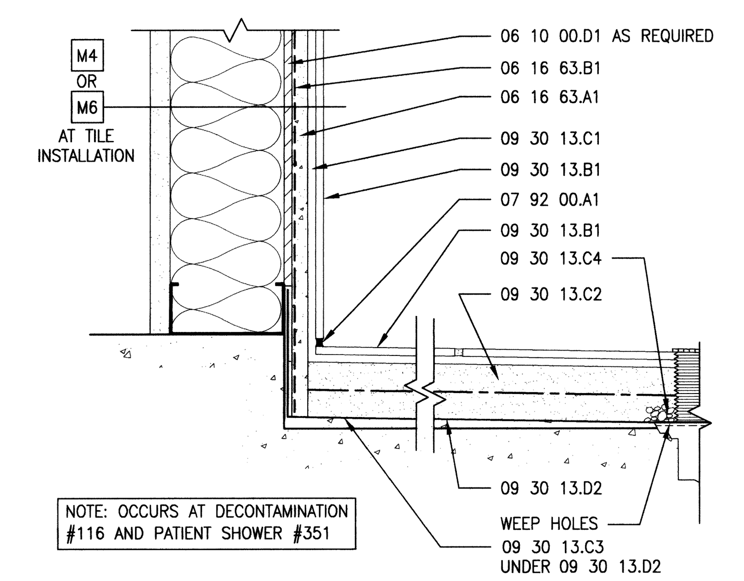

B6 TILE FLOOR-TO-WALL TCA# B415-09
SCALE: 3" = 1'-0"

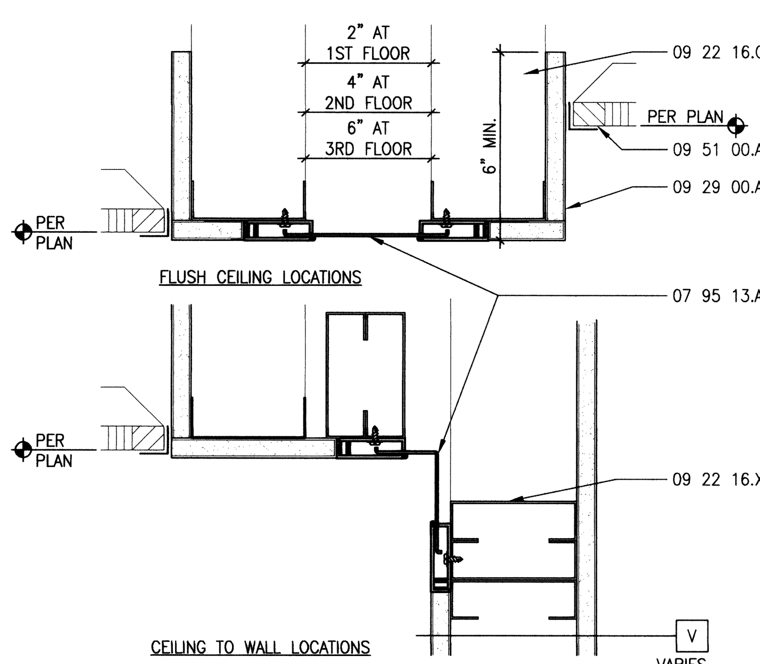

A1 EXPANSION JOINT COVER
SCALE: 3" = 1'-0"

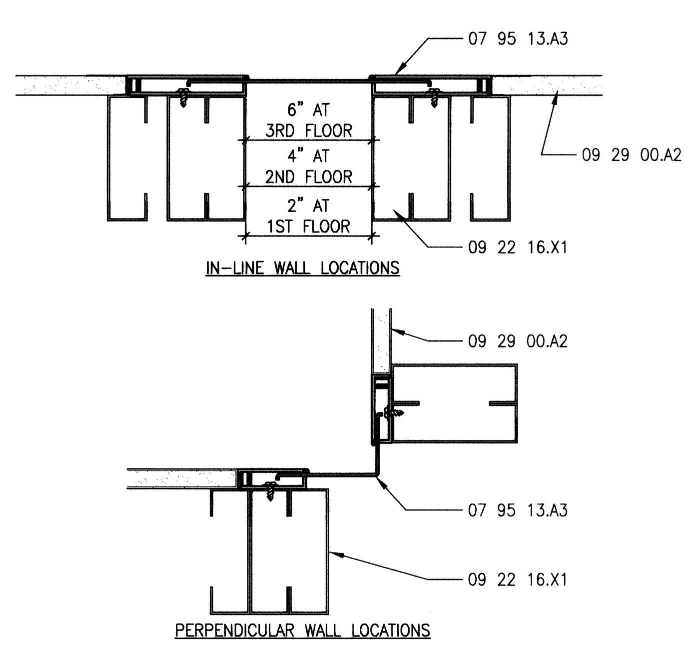

A2 EXPANSION JOINT COVER
SCALE: 3" = 1'-0"

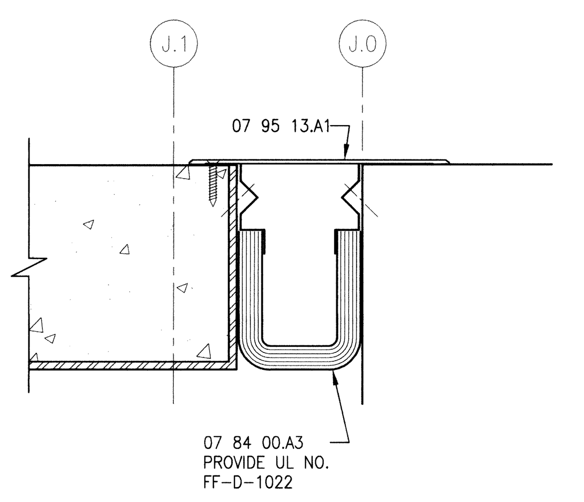

A3 FLOOR SEISMIC JOINT COVER
SCALE: 3" = 1'-0"

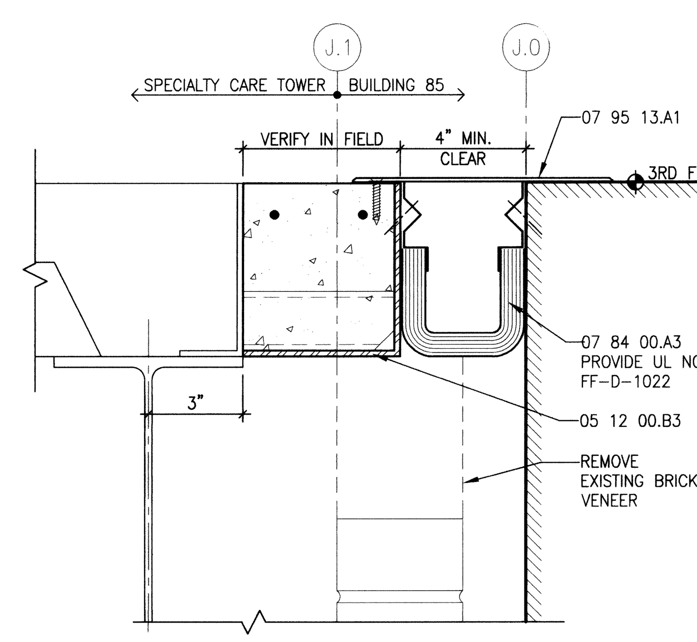

A4 FLOOR SEISMIC JOINT COVER
SCALE: 3" = 1'-0"

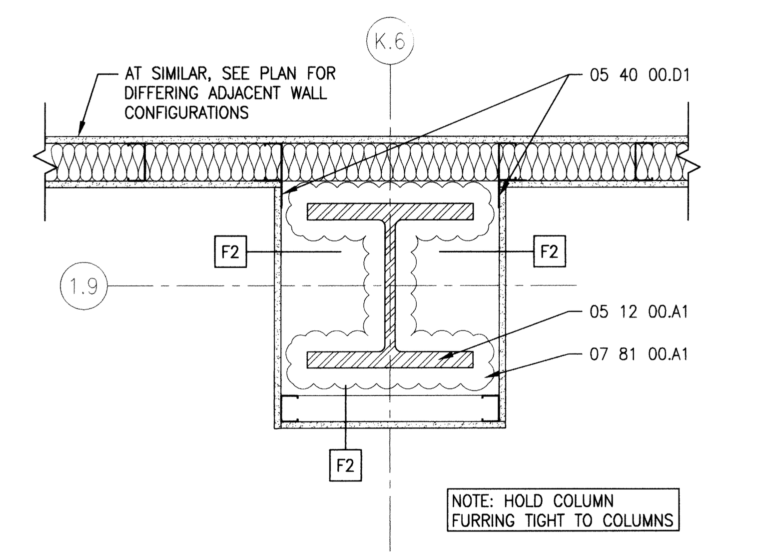

A5 TYPICAL INTERIOR COLUMN FURRING
SCALE: 1" = 1'-0"

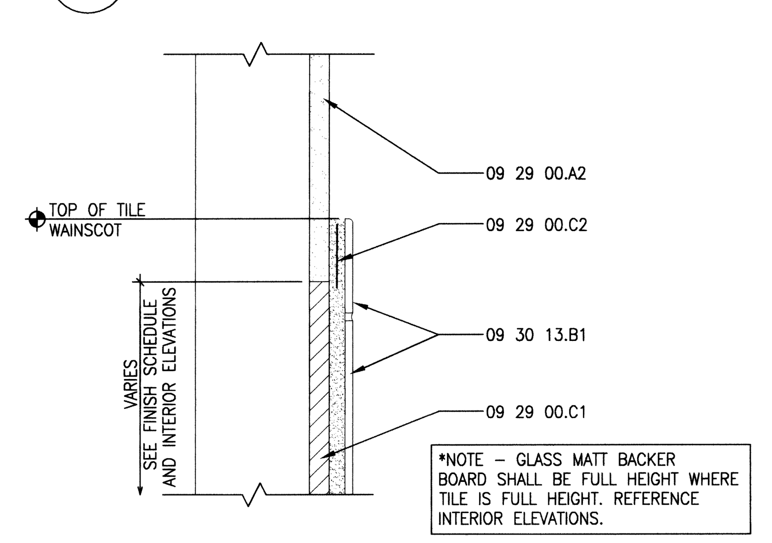

A6 WALLBOARD TRANSITION TCA#W245-03
SCALE: 3" = 1'-0"

REVISIONS | DATE

Architects and Planners, Chartered
565 W. Myrtle Street, Suite 225 Boise, Idaho 83702-7606

CAD FILE NAME: 531-317_A7.4.dwg
XREF FILE NAME: 531-317_xVAbord.dwg
d001, d004, d005
d006, d023, d024, d033,
d034, d035, d036, d037, d063
d038, d047, d048, d052, d058
d053, d054, d055, d056, d057

FOR CONSTRUCTION

DRAWING TITLE: INTERIOR DETAILS
APPROVED: CHIEF OF FACILITY MANAGEMENT SERVICE
APPROVED: MEDICAL CENTER DIRECTOR

PROJECT TITLE: REPLACE AND MODERNIZE SURGERY / INTENSIVE CARE UNIT
BUILDING NUMBER: 85
CHECKED: ST
DRAWN: SM/BB
LOCATION: VAMC BOISE, IDAHO

DATE: 11/01/2011
PROJECT NO.: 531-317
DRAWING NO.: A7.4
DWG 39 OF 188

DEPARTMENT OF VETERANS AFFAIRS

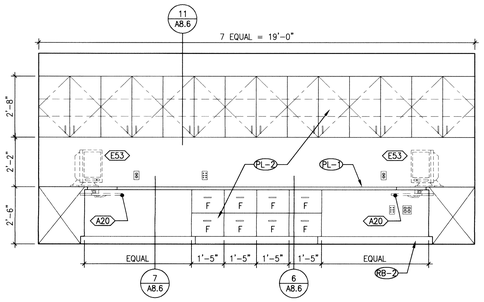

21 ADMITTING 112A
SCALE: 3/8" = 1'-0"

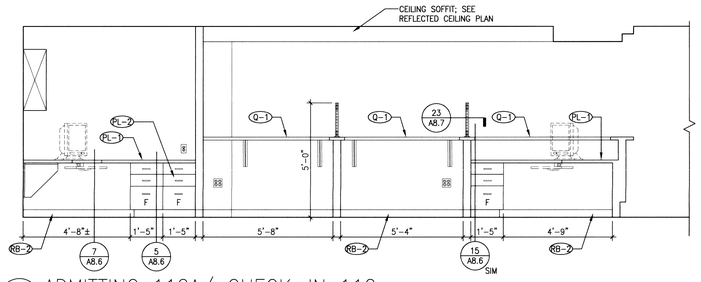

22 ADMITTING 112A/ CHECK-IN 112
SCALE: 3/8" = 1'-0"

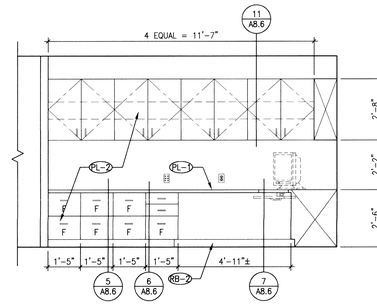

23 ADMITTING 112A
SCALE: 3/8" = 1'-0"

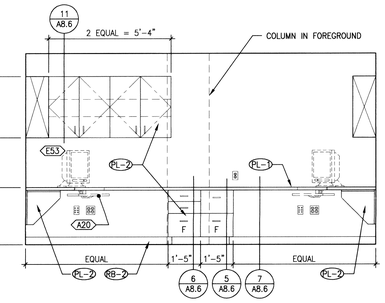

24 ADMITTING 112A
SCALE: 3/8" = 1'-0"

GENERAL SHEET NOTES

A. ABBREVIATIONS:
   F = FILE DRAWER WITH HANGING FILE SYSTEM
   L = LOCK ON CABINET FOORS
B. FOR PLUMBING FIXTURE AND ACCESSORY MOUNTING HEIGHTS SEE A8.5.
C. VERIFY ALL DIMENSIONS BETWEEN WALLS FOR CABINETS.
D. ALL VERTICAL DIMENSIONS ARE FROM TOP OF FINISHED FLOORING, ADJUST DIMENSIONS IF CABINETS ARE INSTALLED PRIOR TO FLOORING UNDERLAYMENT.
E. PROVIDE ADJUSTABLE MELAMINE SHELVES WHERE SHELVING IS CONCEALED BEHIND CABINET DOORS, QUANTITY AS SHOWN ON ELEVATIONS.
F. ALL WALL-MOUNTED ACCESSORIES AND EQUIPMENT TO BE ATTACHED TO STUD FRAMING, BACKING AND/OR BLOCKING, UNLESS INDICATED OTHERWISE.
G. OUTLETS SHOWN FOR COORDINATION ONLY, SEE ELECTRICAL.
H. PROVIDE GROMMETS AS SHOWN ON PLAN. PROVIDE ADDITIONAL 5 GROMMETS; LOCATION TO BE DETERMINED BY OWNER.
I. ALL CASEWORK TO MEET THE ARCHITECTURAL WOODWORK QUALITY STANDARDS ISSUED BY THE ARCHITECTURAL WOODWORK INSTITUTE (AWI) REFERENCE STANDARDS, LATEST EDITION, FOR CASEWORK CONSTRUCTION DETAILS.
J. PROVIDE CABINET FILLERS AND SCRIBE ALL CABINETS TO ADJACENT WALLS. CABINET FILLERS TO BE A MAXIMUM OF 2" WIDE.

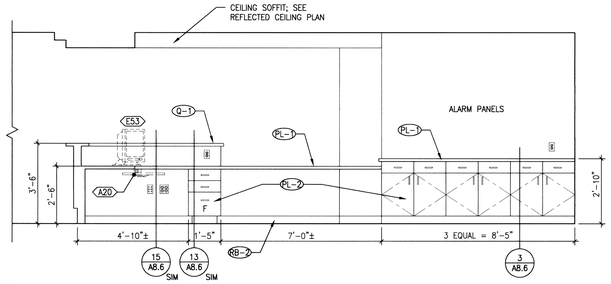

15 CHECK-IN 112
SCALE: 3/8" = 1'-0"

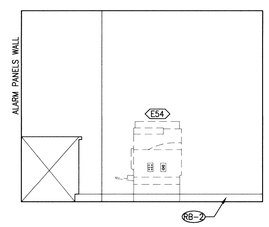

16 CHECK-IN 112
SCALE: 3/8" = 1'-0"

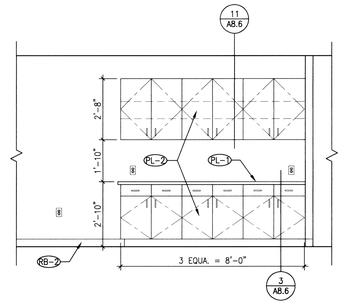

17 CHECK-IN 112
SCALE: 3/8" = 1'-0"

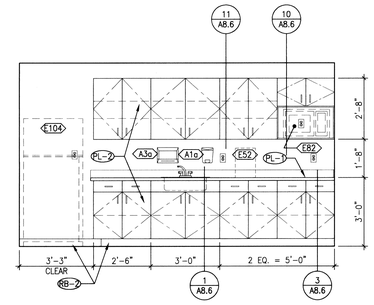

18 BREAK ROOM 112E
SCALE: 3/8" = 1'-0"

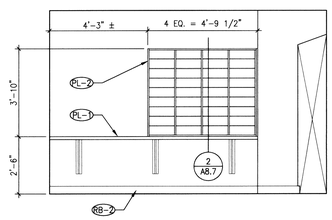

19 BREAK ROOM 112E
SCALE: 3/8" = 1'-0"

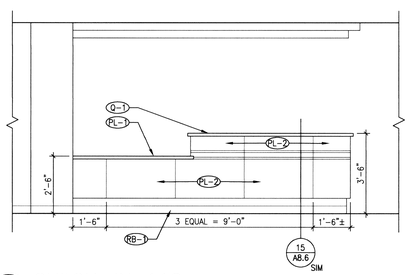

10 CHECK-IN 112
SCALE: 3/8" = 1'-0"

*NOTE: SEE INTERIOR ELEVATION ON SHEET A2.8 FOR SIGNAGE LOCATION

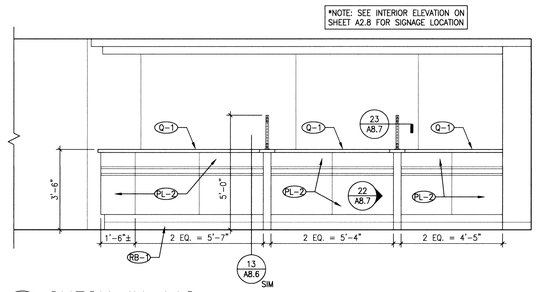

11 CHECK-IN 112
SCALE: 3/8" = 1'-0"

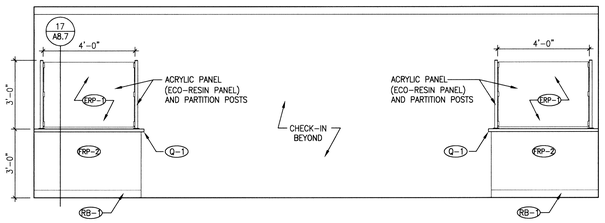

12 WAITING 112F
SCALE: 3/8" = 1'-0"

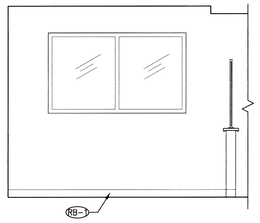

13 WAITING 112F
SCALE: 3/8" = 1'-0"

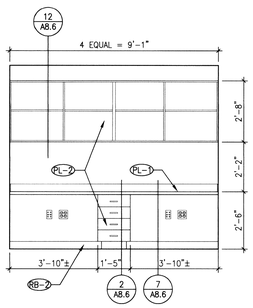

1 TRIAGE 112B
SCALE: 3/8" = 1'-0"

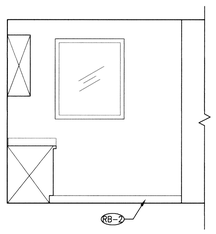

2 TRIAGE 112B
SCALE: 3/8" = 1'-0"

REVISIONS	DATE

LICENSED ARCHITECT — STATE OF IDAHO — AR-985 — NOV. 1, 2011

ZGA. Architects and Planners, Chartered
565 W. Myrtle Street, Suite 225 Boise, Idaho 83702-7606

CAD FILE NAME: 531-317_A8.0-A8.5.dwg
XREF FILE NAME: 531-317_xVAbord.dwg

DRAWING TITLE: FIRST FLOOR INTERIOR ELEVATIONS

PROJECT TITLE: REPLACE AND MODERNIZE SURGERY / INTENSIVE CARE UNIT

DATE: 11/01/2011
PROJECT NO.: 531-317

APPROVED: CHIEF OF FACILITY MANAGEMENT SERVICE
APPROVED: MEDICAL CENTER DIRECTOR

BUILDING NUMBER: 85
CHECKED: ST
DRAWN: SM

LOCATION: VAMC BOISE, IDAHO

DRAWING NO.: A8.0
DWG 40 OF 188

FOR CONSTRUCTION
DEPARTMENT OF VETERANS AFFAIRS

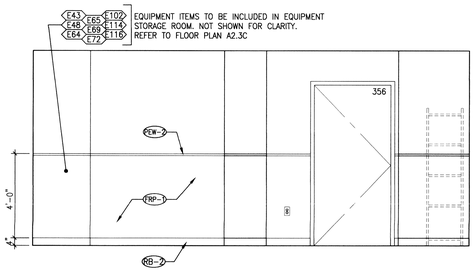

20 EQUIPMENT STORAGE 356
SCALE: 3/8" = 1'-0"

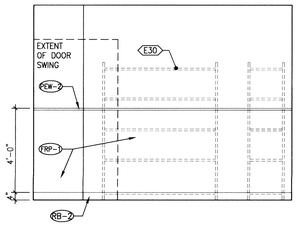

21 EQUIPMENT STORAGE 356
SCALE: 3/8" = 1'-0"

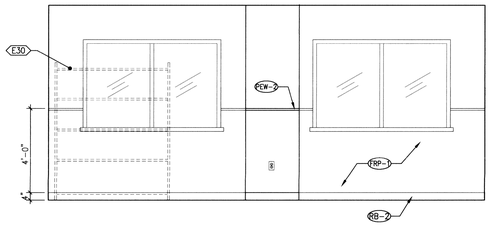

22 EQUIPMENT STORAGE 356
SCALE: 3/8" = 1'-0"

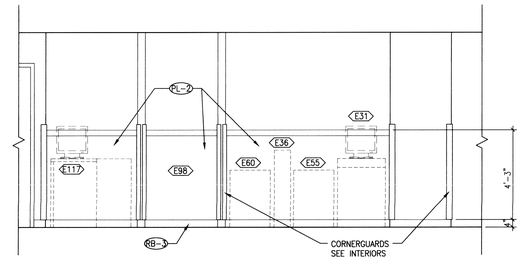

23 ALCOVE STORAGE 340
SCALE: 3/8" = 1'-0"

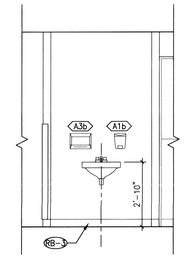

24 ICU HALL C39
SCALE: 3/8" = 1'-0"

GENERAL SHEET NOTES

A. ABBREVIATIONS:
F = FILE DRAWER WITH HANGING FILE SYSTEM
L = LOCK ON CABINET FOORS

B. FOR PLUMBING FIXTURE AND ACCESSORY MOUNTING HEIGHTS SEE A8.5.

C. VERIFY ALL DIMENSIONS BETWEEN WALLS FOR CABINETS.

D. ALL VERTICAL DIMENSIONS ARE FROM TOP OF FINISHED FLOORING, ADJUST DIMENSIONS IF CABINETS ARE INSTALLED PRIOR TO FLOORING UNDERLAYMENT.

E. PROVIDE ADJUSTABLE MELAMINE SHELVES WHERE SHELVING IS CONCEALED BEHIND CABINET DOORS, QUANTITY AS SHOWN ON ELEVATIONS.

F. ALL WALL-MOUNTED ACCESSORIES AND EQUIPMENT TO BE ATTACHED TO STUD FRAMING, BACKING AND/OR BLOCKING, UNLESS INDICATED OTHERWISE.

G. OUTLETS SHOWN FOR COORDINATION ONLY, SEE ELECTRICAL.

H. PROVIDE GROMMETS AS SHOWN ON PLAN. PROVIDE ADDITIONAL 5 GROMMETS; LOCATION TO BE DETERMINED BY OWNER.

I. ALL CASEWORK TO MEET THE ARCHITECTURAL WOODWORK QUALITY STANDARDS ISSUED BY THE ARCHITECTURAL WOODWORK INSTITUTE (AWI) REFERENCE STANDARDS, LATEST EDITION, FOR CASEWORK CONSTRUCTION DETAILS.

J. PROVIDE CABINET FILLERS AND SCRIBE ALL CABINETS TO ADJACENT WALLS. CABINET FILLERS TO BE A MAXIMUM OF 2" WIDE.

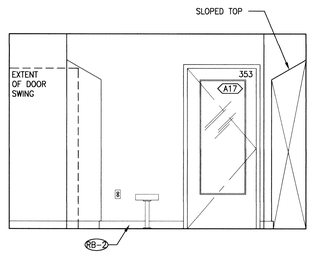

14 STAFF LOCKER 353
SCALE: 3/8" = 1'-0"

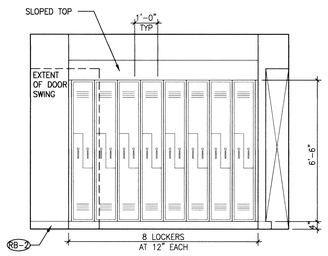

15 STAFF LOCKER 353
SCALE: 3/8" = 1'-0"

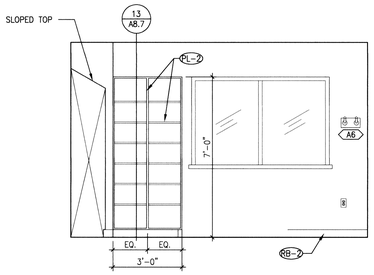

16 STAFF LOCKER 353
SCALE: 3/8" = 1'-0"

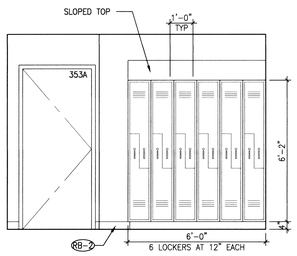

17 STAFF LOCKER 353
SCALE: 3/8" = 1'-0"

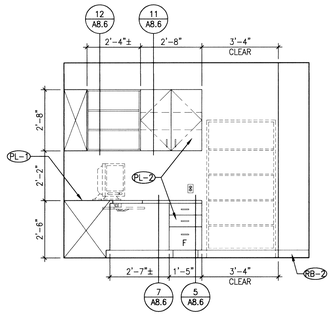

18 HEAD NURSE OFFICE 343
SCALE: 3/8" = 1'-0"

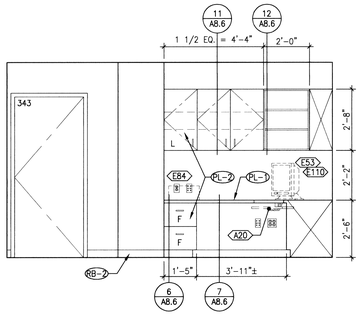

19 HEAD NURSE OFFICE 343
SCALE: 3/8" = 1'-0"

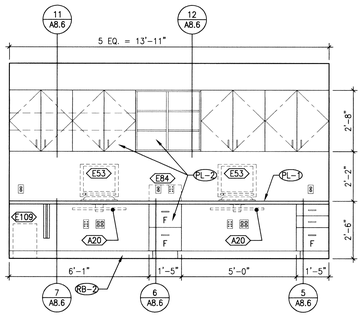

7 HOUSE STAFF WRK. RM. 352
SCALE: 3/8" = 1'-0"

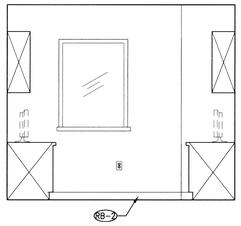

8 HOUSE STAFF WRK. RM. 352
SCALE: 3/8" = 1'-0"

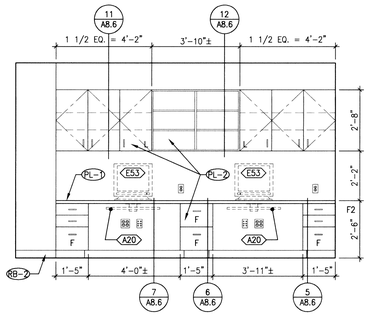

9 HOUSE STAFF WRK. RM. 352
SCALE: 3/8" = 1'-0"

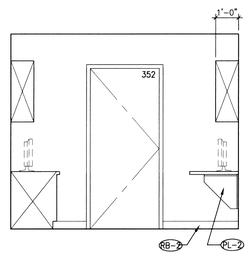

10 HOUSE STAFF WRK. RM. 352
SCALE: 3/8" = 1'-0"

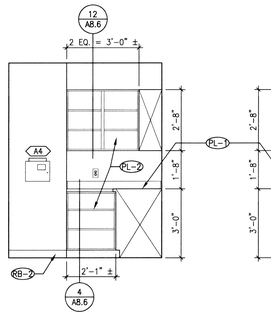

11 MED STOR. 344
SCALE: 3/8" = 1'-0"

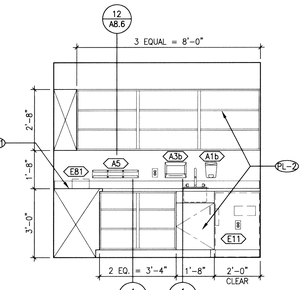

12 MED STORAGE 344
SCALE: 3/8" = 1'-0"

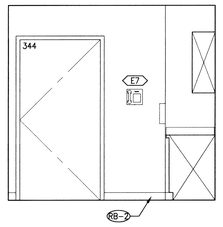

13 MED STORAGE 344
SCALE: 3/8" = 1'-0"

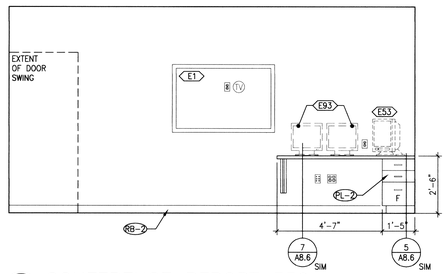

1 CONFERENCE REPORT 350
SCALE: 3/8" = 1'-0"

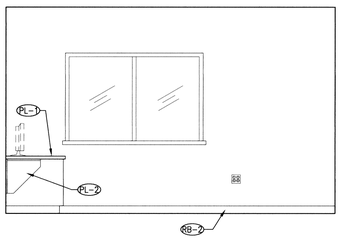

2 CONFERENCE REPORT 350
SCALE: 3/8" = 1'-0"

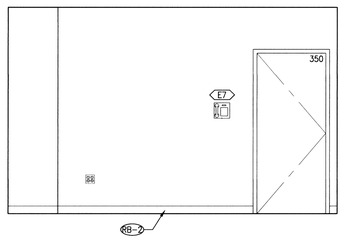

3 CONFERENCE REPORT 350
SCALE: 3/8" = 1'-0"

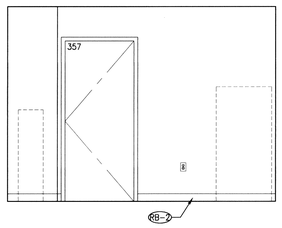

4 CLIN. NURSE SPECIALIST 357
SCALE: 3/8" = 1'-0"

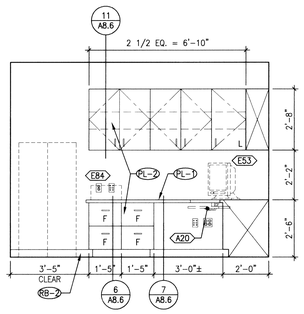

5 CLIN. NURSE SPECIALIST 357
SCALE: 3/8" = 1'-0"

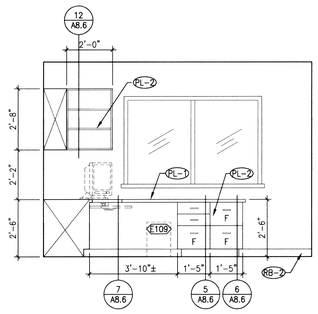

6 CLIN. NURSE SPECIALIST 357
SCALE: 3/8" = 1'-0"

REVISIONS	DATE

LICENSED ARCHITECT — STATE OF IDAHO — JEFFREY C. TURNER

Architects and Planners, Chartered
565 W. Myrtle Street, Suite 225 Boise, Idaho 83702-7606

CAD FILE NAME: 531-317_A8.0-A8.5.dwg
XREF FILE NAME: 531-317_xVAbord.dwg

DRAWING TITLE: INTENSIVE CARE UNIT INTERIOR ELEVATIONS

PROJECT TITLE: REPLACE AND MODERNIZE SURGERY / INTENSIVE CARE UNIT

DATE: 11/01/2011

PROJECT NO. 531-317

APPROVED: CHIEF OF FACILITY MANAGEMENT SERVICE

BUILDING NUMBER: 85 | CHECKED: ST | DRAWN: SM

DRAWING NO. A8.1

APPROVED: MEDICAL CENTER DIRECTOR

LOCATION: VAMC BOISE, IDAHO

DWG 41 OF 188

FOR CONSTRUCTION

DEPARTMENT OF VETERANS AFFAIRS

GENERAL SHEET NOTES

A. ABBREVIATIONS:
   F = FILE DRAWER WITH HANGING FILE SYSTEM
   L = LOCK ON CABINET FOORS
B. FOR PLUMBING FIXTURE AND ACCESSORY MOUNTING HEIGHTS SEE A8.5.
C. VERIFY ALL DIMENSIONS BETWEEN WALLS FOR CABINETS.
D. ALL VERTICAL DIMENSIONS ARE FROM TOP OF FINISHED FLOORING, ADJUST DIMENSIONS IF CABINETS ARE INSTALLED PRIOR TO FLOORING UNDERLAYMENT.
E. PROVIDE ADJUSTABLE MELAMINE SHELVES WHERE SHELVING IS CONCEALED BEHIND CABINET DOORS, QUANTITY AS SHOWN ON ELEVATIONS.
F. ALL WALL-MOUNTED ACCESSORIES AND EQUIPMENT TO BE ATTACHED TO STUD FRAMING, BACKING AND/OR BLOCKING, UNLESS INDICATED OTHERWISE.
G. OUTLETS SHOWN FOR COORDINATION ONLY, SEE ELECTRICAL.
H. PROVIDE GROMMETS AS SHOWN ON PLAN. PROVIDE ADDITIONAL 5 GROMMETS; LOCATION TO BE DETERMINED BY OWNER.
I. ALL CASEWORK TO MEET THE ARCHITECTURAL WOODWORK QUALITY STANDARDS ISSUED BY THE ARCHITECTURAL WOODWORK INSTITUTE (AWI) REFERENCE STANDARDS, LATEST EDITION, FOR CASEWORK CONSTRUCTION DETAILS.
J. PROVIDE CABINET FILLERS AND SCRIBE ALL CABINETS TO ADJACENT WALLS. CABINET FILLERS TO BE A MAXIMUM OF 2" WIDE.

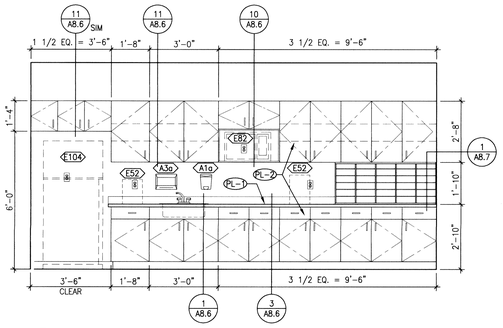

20 STAFF LOUNGE 348
SCALE: 3/8" = 1'-0"

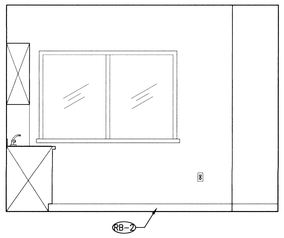

21 STAFF LOUNGE 348
SCALE: 3/8" = 1'-0"

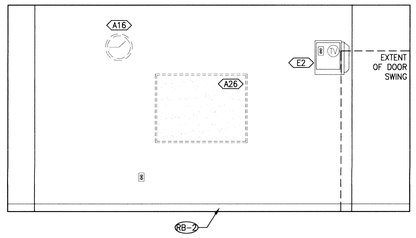

22 STAFF LOUNGE 348
SCALE: 3/8" = 1'-0"

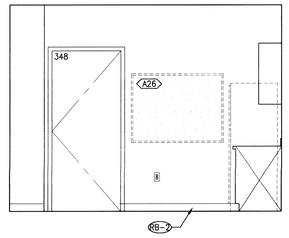

23 STAFF LOUNGE 348
SCALE: 3/8" = 1'-0"

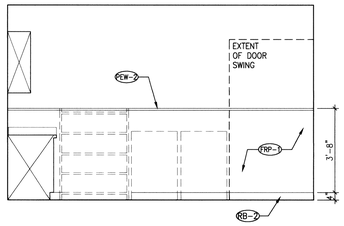

13 SOILED UTILITY 349
SCALE: 3/8" = 1'-0"

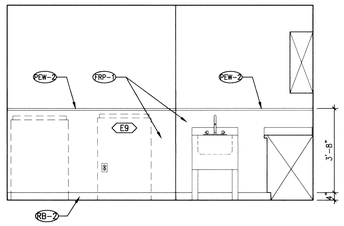

14 SOILED UTILITY 349
SCALE: 3/8" = 1'-0"

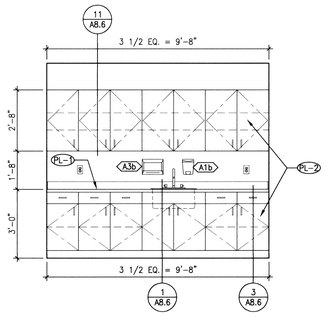

15 SOILED UTILITY 349
SCALE: 3/8" = 1'-0"

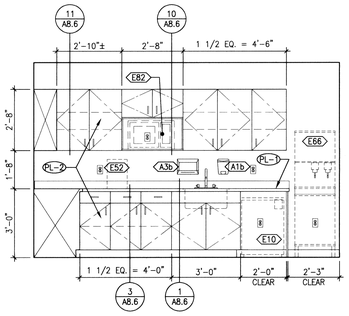

16 NOURISHMENT 347
SCALE: 3/8" = 1'-0"

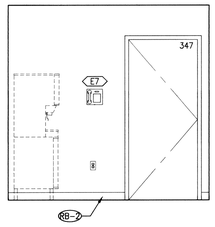

17 NOURISHMENT 347
SCALE: 3/8" = 1'-0"

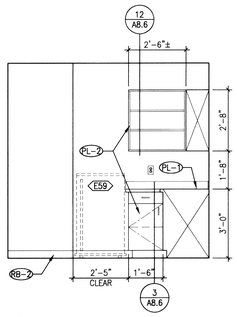

18 NOURISHMENT 347
SCALE: 3/8" = 1'-0"

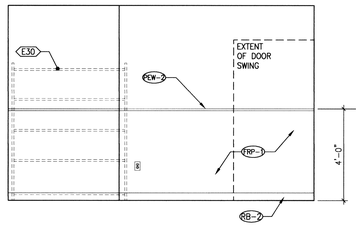

6 CLEAN LINEN 342
SCALE: 3/8" = 1'-0"

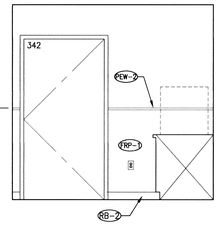

7 CLEAN LINEN 342
SCALE: 3/8" = 1'-0"

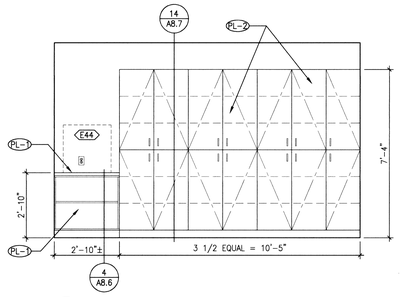

8 CLEAN LINEN 342
SCALE: 3/8" = 1'-0"

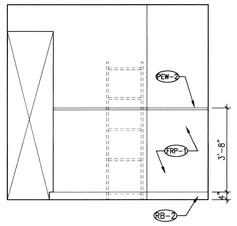

9 CLEAN LINEN 342
SCALE: 3/8" = 1'-0"

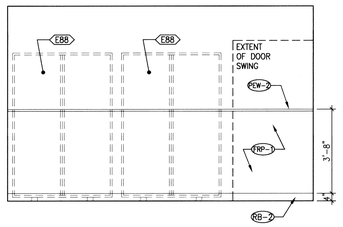

10 CLEAN UTILITY 345
SCALE: 3/8" = 1'-0"

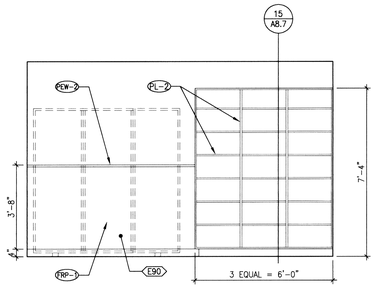

11 CLEAN UTILITY 345
SCALE: 3/8" = 1'-0"

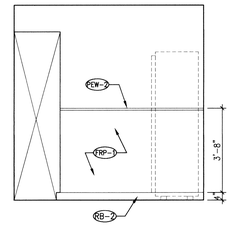

12 CLEAN UTILITY 345
SCALE: 3/8" = 1'-0"

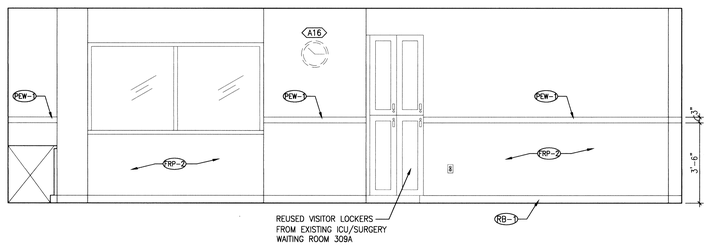

1 I.C.U/SURGERY WAITING 326
SCALE: 3/8" = 1'-0"

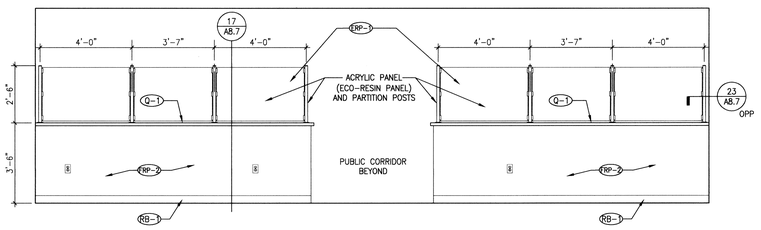

2 I.C.U/SURGERY WAITING 326
SCALE: 3/8" = 1'-0"

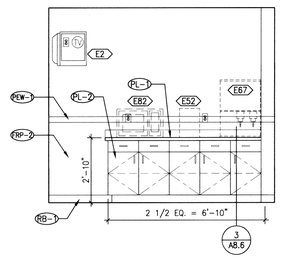

3 I.C.U/SURGERY WAITING 326
SCALE: 3/8" = 1'-0"

REVISIONS	DATE

CHECKED ARCHITECT — STATE OF IDAHO — Nov. 1, 2011

ZGA. Architects and Planners, Chartered
565 W. Myrtle Street, Suite 225 Boise, Idaho 83702-7606

CAD FILE NAME: 531-317_A8.0-A8.5.dwg
XREF FILE NAME: 531-317_xVAbord.dwg

DRAWING TITLE: INTENSIVE CARE UNIT INTERIOR ELEVATIONS
APPROVED: CHIEF OF FACILITY MANAGEMENT SERVICE
APPROVED: MEDICAL CENTER DIRECTOR

PROJECT TITLE: REPLACE AND MODERNIZE SURGERY / INTENSIVE CARE UNIT
BUILDING NUMBER: 85
CHECKED: ST
DRAWN: SM
LOCATION: VAMC BOISE, IDAHO

DATE: 11/01/2011
PROJECT NO.: 531-317
DRAWING NO.: A8.2
DWG 42 OF 188

FOR CONSTRUCTION
DEPARTMENT OF VETERANS AFFAIRS

GENERAL SHEET NOTES

A. ABBREVIATIONS:
   F = FILE DRAWER WITH HANGING FILE SYSTEM
   L = LOCK ON CABINET FOORS
B. FOR PLUMBING FIXTURE AND ACCESSORY MOUNTING HEIGHTS SEE A8.5.
C. VERIFY ALL DIMENSIONS BETWEEN WALLS FOR CABINETS.
D. ALL VERTICAL DIMENSIONS ARE FROM TOP OF FINISHED FLOORING, ADJUST DIMENSIONS IF CABINETS ARE INSTALLED PRIOR TO FLOORING UNDERLAYMENT.
E. PROVIDE ADJUSTABLE MELAMINE SHELVES WHERE SHELVING IS CONCEALED BEHIND CABINET DOORS, QUANTITY AS SHOWN ON ELEVATIONS.
F. ALL WALL-MOUNTED ACCESSORIES AND EQUIPMENT TO BE ATTACHED TO STUD FRAMING, BACKING AND/OR BLOCKING, UNLESS INDICATED OTHERWISE.
G. OUTLETS SHOWN FOR COORDINATION ONLY, SEE ELECTRICAL.
H. PROVIDE GROMMETS AS SHOWN ON PLAN. PROVIDE ADDITIONAL 5 GROMMETS; LOCATION TO BE DETERMINED BY OWNER.
I. ALL CASEWORK TO MEET THE ARCHITECTURAL WOODWORK QUALITY STANDARDS ISSUED BY THE ARCHITECTURAL WOODWORK INSTITUTE (AWI) REFERENCE STANDARDS, LATEST EDITION, FOR CASEWORK CONSTRUCTION DETAILS.
J. PROVIDE CABINET FILLERS AND SCRIBE ALL CABINETS TO ADJACENT WALLS. CABINET FILLERS TO BE A MAXIMUM OF 2" WIDE.

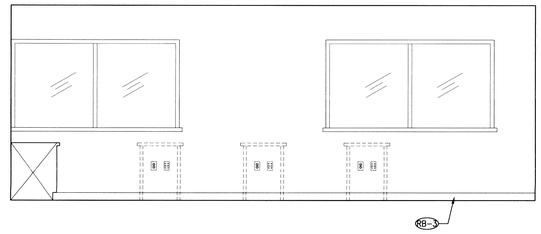

16 CLASSROOM 325
SCALE: 3/8" = 1'-0"

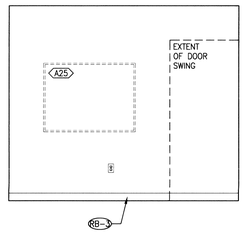

17 CLASSROOM 325
SCALE: 3/8" = 1'-0"

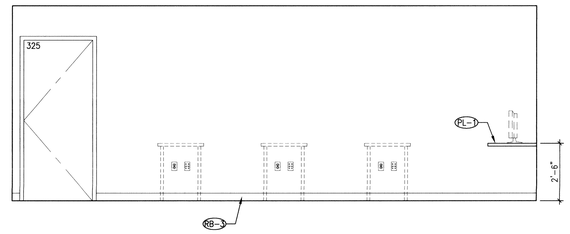

18 CLASSROOM 325
SCALE: 3/8" = 1'-0"

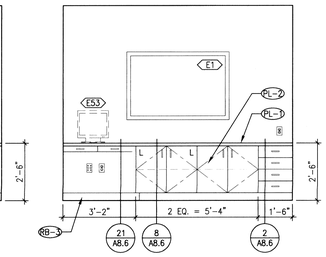

19 CLASSROOM 325
SCALE: 3/8" = 1'-0"

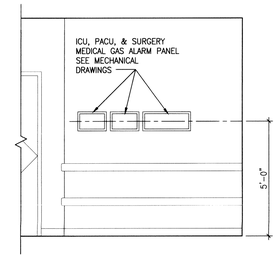

20 ICU HALL C38
SCALE: 3/8" = 1'-0"

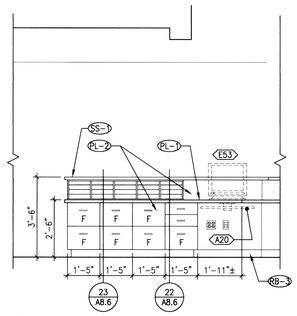

11 NURSE STATION 330
SCALE: 3/8" = 1'-0"

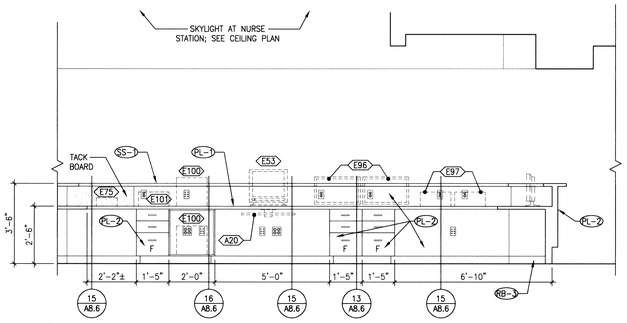

12 NURSE STATION 330
SCALE: 3/8" = 1'-0"

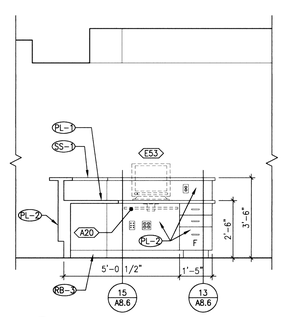

13 NURSE STATION 330
SCALE: 3/8" = 1'-0"

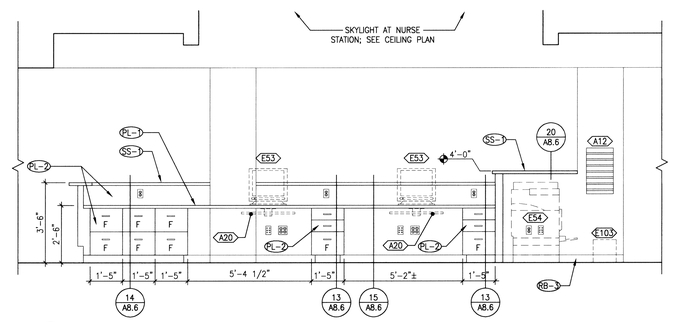

14 NURSE STATION 330
SCALE: 3/8" = 1'-0"

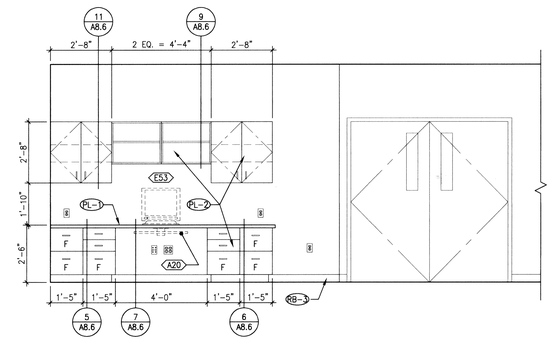

15 I.C.U. HALL C39
SCALE: 3/8" = 1'-0"

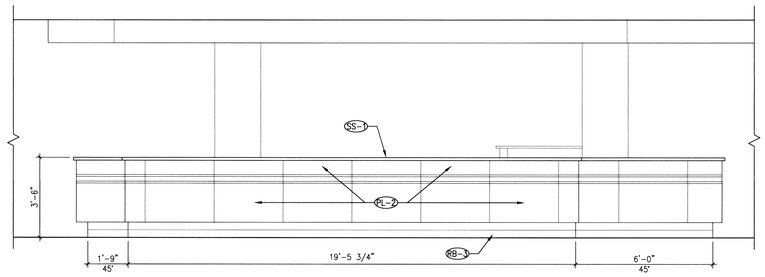

6 I.C.U. HALL C38/NURSE STATION 330
SCALE: 3/8" = 1'-0"

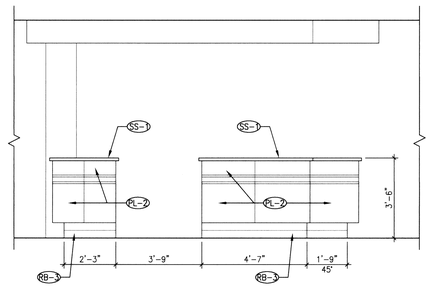

7 I.C.U. HALL C38/NURSE STATION 330
SCALE: 3/8" = 1'-0"

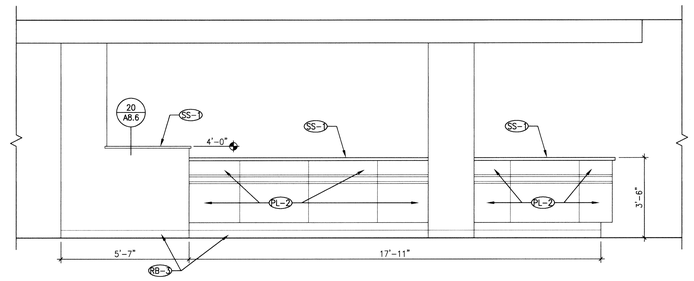

8 I.C.U. HALL C38/NURSE STATION 330
SCALE: 3/8" = 1'-0"

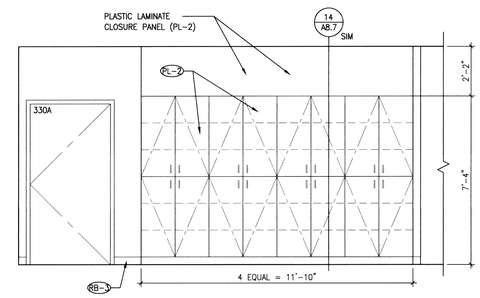

10 I.C.U. HALL C38
SCALE: 3/8" = 1'-0"

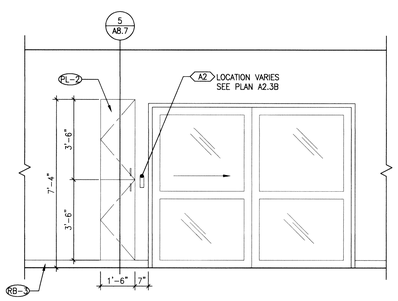

1 I.C.U. HALL – TYPICAL/OPP
SCALE: 3/8" = 1'-0"

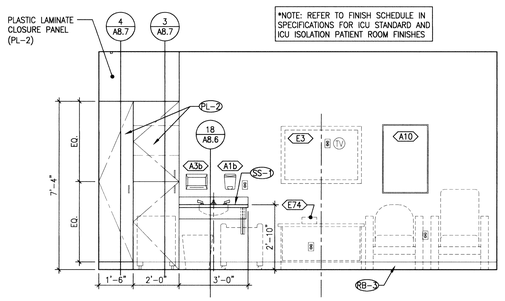

2 ICU PATIENT ROOM – TYPICAL (335)
SCALE: 3/8" = 1'-0"

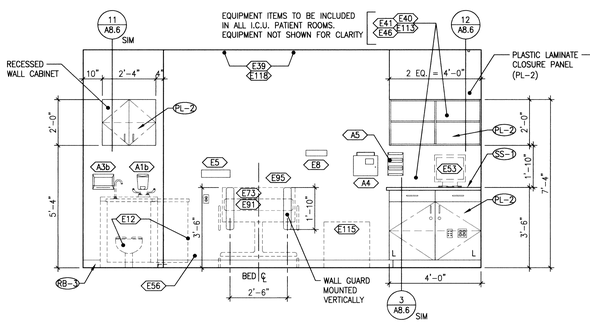

3 ICU PATIENT ROOM – TYPICAL (335)
SCALE: 3/8" = 1'-0"

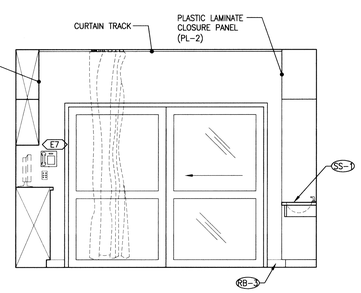

4 ICU PATIENT ROOM – TYPICAL (335)
SCALE: 3/8" = 1'-0"

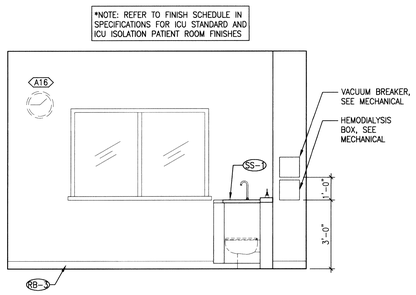

5 ICU PATIENT ROOM – TYPICAL (335)
SCALE: 3/8" = 1'-0"

REVISIONS	DATE

LICENSED ARCHITECT, BOISE, IDAHO, STEVEN A. TORAN, AR-1985, STATE OF IDAHO

Architects and Planners, Chartered
565 W. Myrtle Street, Suite 225 Boise, Idaho 83702-7606

CAD FILE NAME: 531-317_A8.0-A8.5.dwg
XREF FILE NAME: 531-317_xVAbord.dwg

DRAWING TITLE: INTENSIVE CARE UNIT INTERIOR ELEVATIONS

PROJECT TITLE: REPLACE AND MODERNIZE SURGERY / INTENSIVE CARE UNIT

DATE: 11/01/2011
PROJECT NO. 531-317

APPROVED: CHIEF OF FACILITY MANAGEMENT SERVICE
APPROVED: MEDICAL CENTER DIRECTOR

BUILDING NUMBER: 85
CHECKED: ST
DRAWN: SM
LOCATION: VAMC BOISE, IDAHO

DRAWING NO. A8.3
DWG 43 OF 188

FOR CONSTRUCTION
DEPARTMENT OF VETERANS AFFAIRS

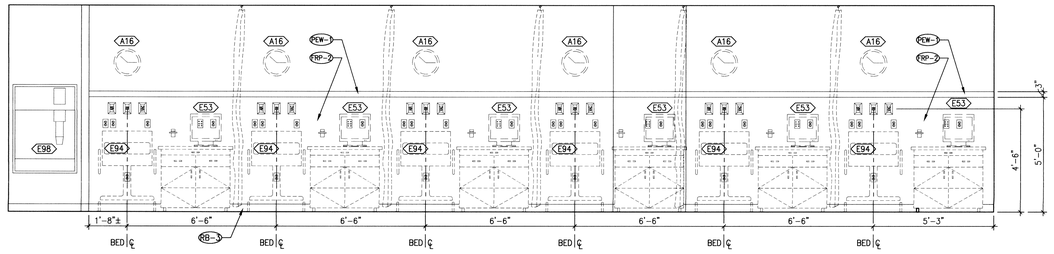

16 P.A.C.U. 358
SCALE: 3/8" = 1'-0"

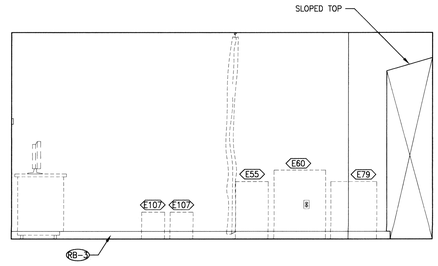

17 P.A.C.U. 358
SCALE: 3/8" = 1'-0"

GENERAL SHEET NOTES

A. ABBREVIATIONS:
F = FILE DRAWER WITH HANGING FILE SYSTEM
L = LOCK ON CABINET FOORS

B. FOR PLUMBING FIXTURE AND ACCESSORY MOUNTING HEIGHTS SEE A8.5.

C. VERIFY ALL DIMENSIONS BETWEEN WALLS FOR CABINETS.

D. ALL VERTICAL DIMENSIONS ARE FROM TOP OF FINISHED FLOORING, ADJUST DIMENSIONS IF CABINETS ARE INSTALLED PRIOR TO FLOORING UNDERLAYMENT.

E. PROVIDE ADJUSTABLE MELAMINE SHELVES WHERE SHELVING IS CONCEALED BEHIND CABINET DOORS, QUANTITY AS SHOWN ON ELEVATIONS.

F. ALL WALL-MOUNTED ACCESSORIES AND EQUIPMENT TO BE ATTACHED TO STUD FRAMING, BACKING AND/OR BLOCKING, UNLESS INDICATED OTHERWISE.

G. OUTLETS SHOWN FOR COORDINATION ONLY, SEE ELECTRICAL.

H. PROVIDE GROMMETS AS SHOWN ON PLAN. PROVIDE ADDITIONAL 5 GROMMETS; LOCATION TO BE DETERMINED BY OWNER.

I. ALL CASEWORK TO MEET THE ARCHITECTURAL WOODWORK QUALITY STANDARDS ISSUED BY THE ARCHITECTURAL WOODWORK INSTITUTE (AWI) REFERENCE STANDARDS, LATEST EDITION, FOR CASEWORK CONSTRUCTION DETAILS.

J. PROVIDE CABINET FILLERS AND SCRIBE ALL CABINETS TO ADJACENT WALLS. CABINET FILLERS TO BE A MAXIMUM OF 2" WIDE.

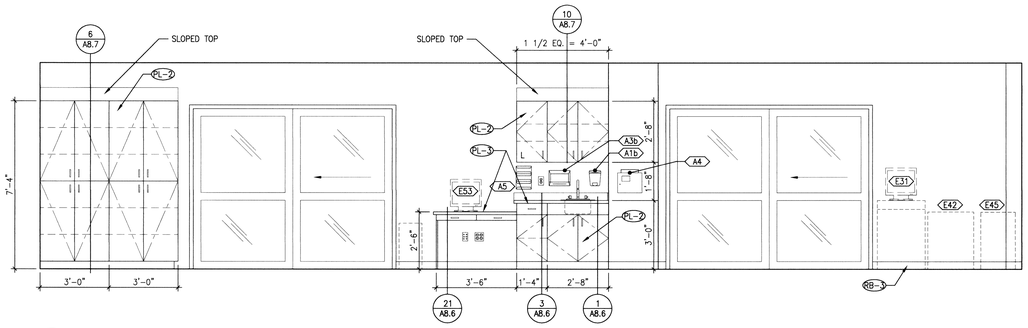

11 P.A.C.U. 358
SCALE: 3/8" = 1'-0"

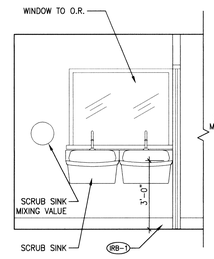

12 SCRUB 361
SCALE: 3/8" = 1'-0"

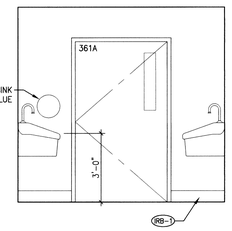

13 SCRUB 361
SCALE: 3/8" = 1'-0"

NOTE: SEE PLAN SHEETS A2.3B AND A2.3C FOR EQUIPMENT ITEMS NOT SHOWN ON ELEVATIONS

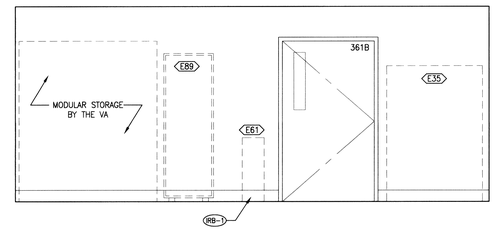

14 SUB-STERILE/SUPPLY 361A
SCALE: 3/8" = 1'-0"

NOTE: SEE PLAN SHEETS A2.3B AND A2.3C FOR EQUIPMENT ITEMS NOT SHOWN ON ELEVATIONS

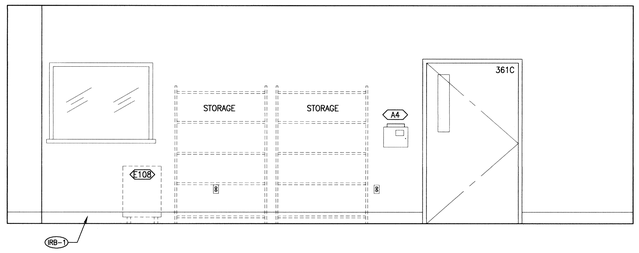

6 O.R. #3 - 360
SCALE: 3/8" = 1'-0"

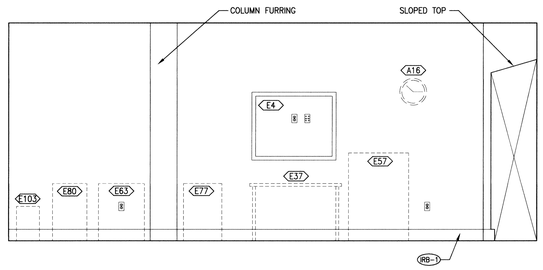

7 O.R. #3 - 360
O.R. #3 - 360

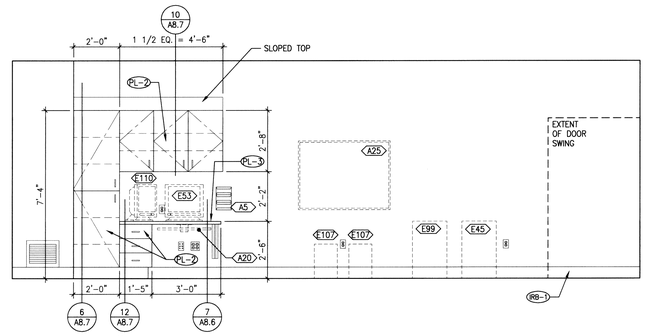

8 O.R. #3 - 360
SCALE: 3/8" = 1'-0"

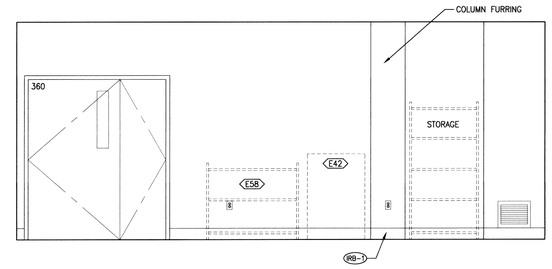

9 O.R. #3 - 360
O.R. #3 - 360

NOTE: SEE PLAN SHEETS A2.3B AND A2.3C FOR EQUIPMENT ITEMS NOT SHOWN ON ELEVATIONS

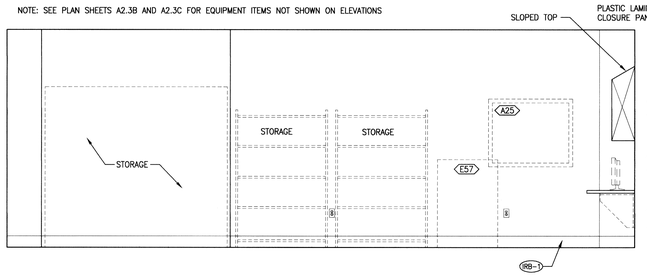

1 O.R. #4 - 362
SCALE: 3/8" = 1'-0"

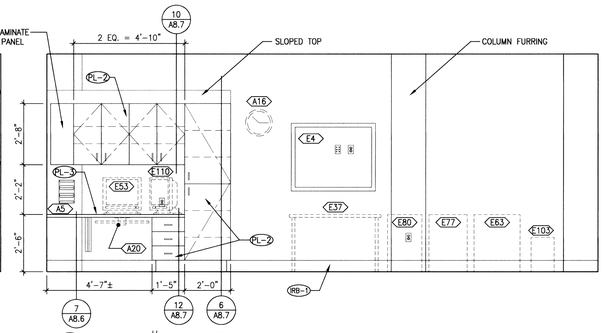

2 O.R. #4 - 362
SCALE: 3/8" = 1'-0"

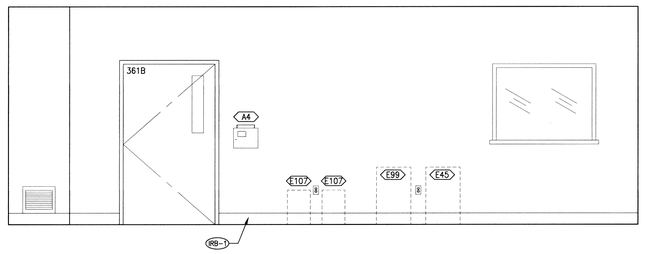

3 O.R. #4 - 362
SCALE: 3/8" = 1'-0"

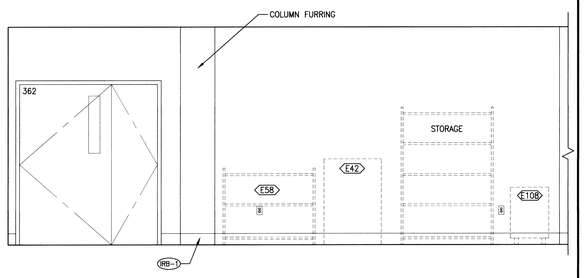

4 O.R. #4 - 362
SCALE: 3/8" = 1'-0"

REVISIONS	DATE

LICENSED ARCHITECT
AR-1886
JAN 17 2011
STATE OF IDAHO
ROGER C. TURNER

ZGA. Architects and Planners, Chartered
565 W. Myrtle Street, Suite 225 Boise, Idaho 83702-7606

CAD FILE NAME: 531-317_A8.0-A8.5.dwg
XREF FILE NAME: 531-317_xVAbord.dwg

DRAWING TITLE: SURGERY INTERIOR ELEVATIONS

PROJECT TITLE: REPLACE AND MODERNIZE SURGERY / INTENSIVE CARE UNIT

DATE: 11/01/2011
PROJECT NO. 531-317

APPROVED: CHIEF OF FACILITY MANAGEMENT SERVICE
APPROVED: MEDICAL CENTER DIRECTOR

BUILDING NUMBER: 85
CHECKED: ST
DRAWN: SM
LOCATION: VAMC BOISE, IDAHO

DRAWING NO. A8.4
DWG 44 OF 188

FOR CONSTRUCTION
DEPARTMENT OF VETERANS AFFAIRS

ACCESSIBLE CLEAR SPACES

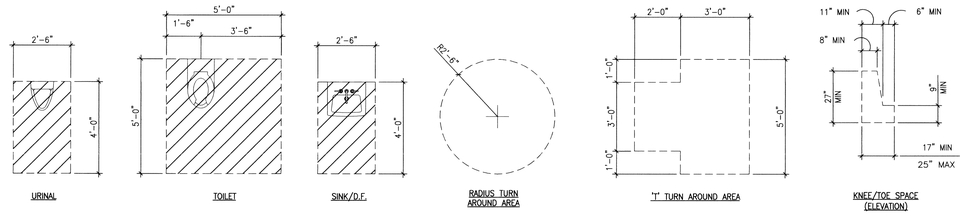

NOTE:

1. ALL DIMENSIONS ARE CLEAR DIMENSIONS
2. CLEARANCES SHOWN ARE PER ICC/ANSI A117.1

FIXTURE MOUNTING HEIGHTS

FIXTURE MOUNTING SCHEDULE KEYNOTES:

A. WATER CLOSET (W.C.)
B. URINAL
C. SINK
D. DRINKING FOUNTAIN, DUAL HEIGHT
E. ELECTRICAL SWITCHES, INTERCOMS, THERMOSTATS, F.A. PULLS
F. MINIMUM CLEARANCE
G. KNEE/TOE SPACE
H. ELECTRICAL RECEPTACLE (OUTLET)
I. ADJACENT WALL
J. FIRE EXTINGUISHER
K. FIRE ALARM

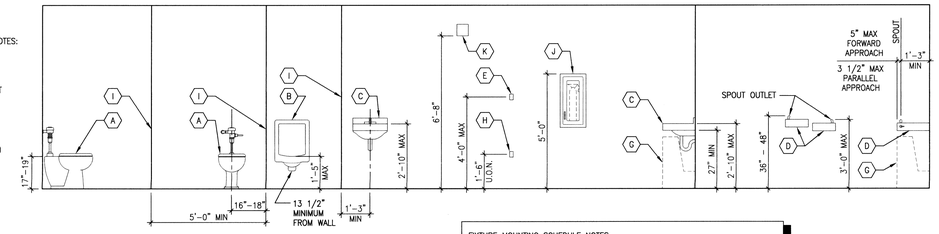

FIXTURE MOUNTING SCHEDULE NOTES:

1. DIMENSIONS ARE FROM FINISHED WALL SURFACE AND FINISHED FLOOR.
2. ALL DIMENSIONS SHOWN ARE TO TOP OF OPERATING MECHANISM FOR EACH ACCESSORY. DIMENSION LINES WITH TWO DIMENSIONS INDICATE THE MINIMUM AND MAXIMUM DIMENSION.

GENERAL NOTES

A. DO NOT SCALE DRAWINGS.
B. VERIFY EXISTING UTILITY LOCATIONS PRIOR TO CONSTRUCTION.
C. VERIFY ALL DIMENSIONS.
D. PROVIDE BACKING AT ALL WALL-MOUNTED ITEMS.
E. PROVIDE SEALANT AT ALL LOCATIONS WHERE GYPSUM BOARD MEETS DISSIMILAR MATERIALS.
F. FOR EQUIPMENT AND ACCESSORY SCHEDULE SEE A8.5 AND A8.8.

ACCESSORY MOUNTING HEIGHTS

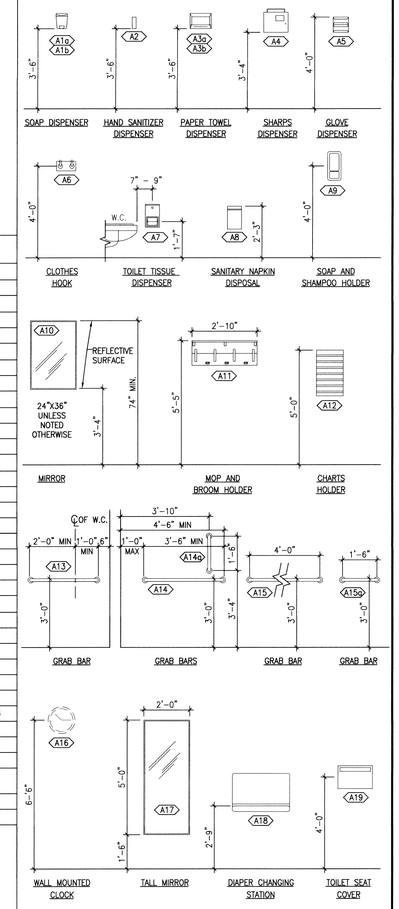

NOTES:

1. DIMENSIONS ARE FROM FINISHED WALL SURFACE AND FINISHED FLOOR.
2. ALL DIMENSIONS SHOWN ARE TO TOP OF OPERATING MECHANISM FOR EACH ACCESSORY. DIMENSION LINES WITH TWO DIMENSIONS INDICATE THE MINIMUM AND MAXIMUM DIMENSION.
3. REFER AND VERIFY WITH MANUFACTURER'S RECOMMENDED MOUNTING HEIGHTS.
4. NOT ALL ACCESSORIES ARE SHOWN IN MOUNTING SCHEDULE.

ACCESSORY SCHEDULE

ITEM TAG	DESCRIPTION	FURNISHED	INSTALLED	MOUNTING	BACKING	BASIS-OF-DESIGN MODEL #
A1a	SOAP DISPENSER	OWNER	CONTRACTOR	WALL	NO	
A1b	SOAP DISPENSER (TOUCHLESS)	OWNER	CONTRACTOR	WALL	NO	
A2	HAND SANITIZER DISPENSER	OWNER	CONTRACTOR	WALL	NO	
A3a	PAPER TOWEL DISPENSER	OWNER	CONTRACTOR	WALL	NO	
A3b	PAPER TOWEL DISPENSER (TOUCHLESS)	OWNER	CONTRACTOR	WALL	NO	
A4	SHARPS DISPOSAL	OWNER	CONTRACTOR	WALL	NO	
A5	GLOVE DISPENSER	OWNER	CONTRACTOR	WALL	NO	
A6	CLOTHES HOOKS (2)	CONTRACTOR	CONTRACTOR	WALL	NO	BOBRICK B-2116, NOTE 1
A7	TOILET TISSUE DISPENSER	OWNER	CONTRACTOR	WALL	NO	
A8	SANITARY NAPKIN DISPOSAL	OWNER	CONTRACTOR	WALL	NO	
A9	SOAP AND SHAMPOO HOLDER	CONTRACTOR	CONTRACTOR	WALL	YES	DANIELS KITCHEN BATH
A10	METAL FRAMED MIRROR (2'X3')	CONTRACTOR	CONTRACTOR	WALL	NO	BOBRICK B-165
A11	MOP RACK	CONTRACTOR	CONTRACTOR	WALL	YES	BOBRICK B-239x34
A12	CHART HOLDER	OWNER	CONTRACTOR	WALL	YES	
A13	36" GRAB BAR	CONTRACTOR	CONTRACTOR	WALL	YES	BOBRICK B-5806x36
A14	42" GRAB BAR	CONTRACTOR	CONTRACTOR	WALL	YES	BOBRICK B-5806x42
A14a	18" VERTICAL GRAB BAR	CONTRACTOR	CONTRACTOR	WALL	YES	BOBRICK B-5806x18
A15	48" GRAB BAR	CONTRACTOR	CONTRACTOR	WALL	YES	BOBRICK B-5806x48
A15a	18" GRAB BAR	CONTRACTOR	CONTRACTOR	WALL	YES	BOBRICK B-5806x18
A16	WALL MOUNTED ANALOG CLOCK	OWNER	OWNER	WALL	NO	
A17	TALL METAL FRAMED MIRROR (2'X5')	CONTRACTOR	CONTRACTOR	WALL	NO	BOBRICK B-165
A18	DIAPER CHANGING STATION	CONTRACTOR	CONTRACTOR	WALL	YES	BOBRICK KB110-SSWM
A19	TOILET SEAT COVER DISPENSER	OWNER	CONTRACTOR	WALL	NO	
A20	KEYBOARD TRAY	OWNER	OWNER	MILLWORK	NO	
A21	NOT USED					
A22	SHOWER CURTAIN ROD	CONTRACTOR	CONTRACTOR	WALL	YES	BOBRICK B-6047
A23	L-SHAPED SHOWER GRAB BAR	CONTRACTOR	CONTRACTOR	WALL	YES	BOBRICK B-6861
A24	SHOWER BENCH	CONTRACTOR	CONTRACTOR	WALL	YES	BOBRICK B-5181; NOTE 2, NOTE 3
A25	WHITE BOARD	OWNER	OWNER	WALL	NO	
A26	TACK BOARD	OWNER	OWNER	WALL	NO	
NOTE 1	ATTACH TWO HOOKS TO PLASTIC-LAMINATE-CLAD MOUNTING PANELS (PL-1) 6" HIGH BY 10" WIDE. HOOKS TO BE SPACED EQUALLY SPACED 6" APART ON PANELS, PLUMB AND VERTICAL, IN HORIZONTAL ALIGNMENT.					
NOTE 2	SUBMIT COLOR MANUFACTURER'S COLOR CHART FOR SELECTION					
NOTE 3	BACKING FOR ACCESSORY TO SUPPORT 600lb LOAD					

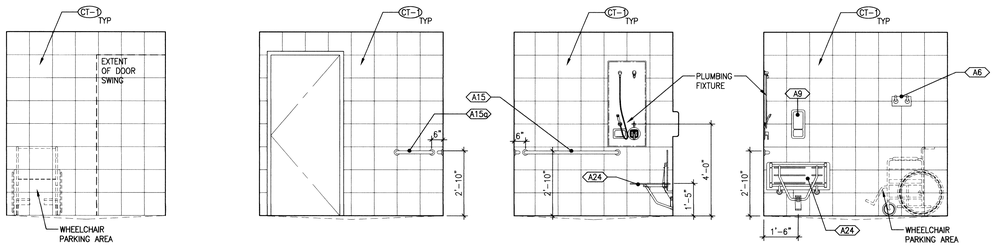

15 PATIENT SHWR. 351 SCALE: 3/8" = 1'-0"
16 PATIENT SHWR. 351 SCALE: 3/8" = 1'-0"
17 PATIENT SHWR. 351 SCALE: 3/8" = 1'-0"
18 PATIENT SHWR. 351 SCALE: 3/8" = 1'-0"

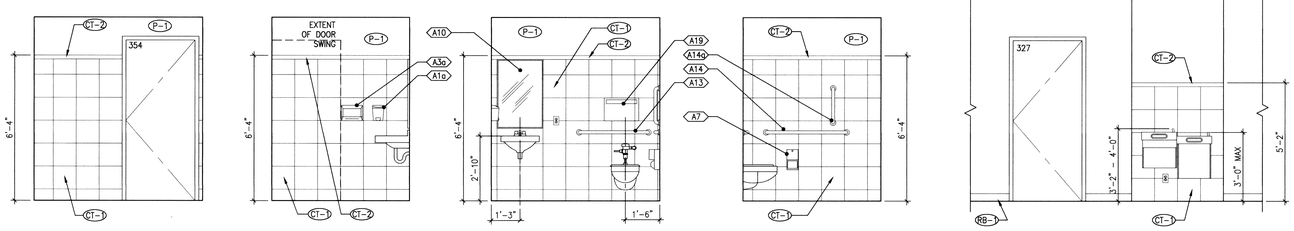

10 STAFF TLT. 354 SCALE: 3/8" = 1'-0"
11 STAFF TLT. 354 SCALE: 3/8" = 1'-0"
12 STAFF TLT. 354 STAFF TLT. 354
13 STAFF TLT. 354 SCALE: 3/8" = 1'-0"
14 DRINKING FOUNTAIN C36 SCALE: 3/8" = 1'-0"

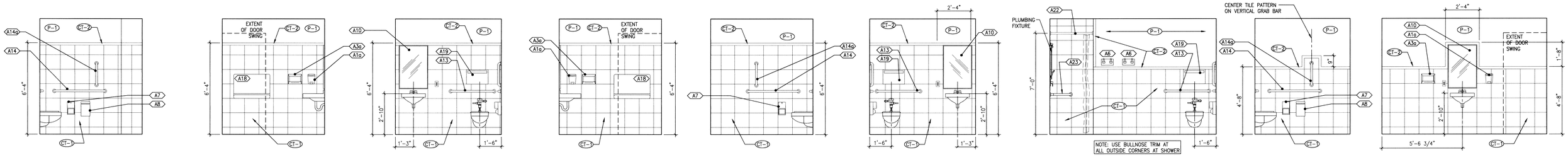

1 W. RESTROOM 328 SCALE: 3/8" = 1'-0"
2 W. RESTROOM 328 SCALE: 3/8" = 1'-0"
3 W. RESTROOM 328 SCALE: 3/8" = 1'-0"
4 M. RESTROOM 329 SCALE: 3/8" = 1'-0"
5 M. RESTROOM 329 SCALE: 3/8" = 1'-0"
6 M. RESTROOM 329 SCALE: 3/8" = 1'-0"
7 TOILET 112K SCALE: 3/8" = 1'-0"
8 TOILET 112K SCALE: 3/8" = 1'-0"
9 TOILET 112K SCALE: 3/8" = 1'-0"

REVISIONS | DATE

LICENSED ARCHITECT — NOV 17 2011 — STATE OF IDAHO — JEFFREY A. SCHMIDT

Architects and Planners, Chartered
565 W. Myrtle Street, Suite 225 Boise, Idaho 83702-7606

CAD FILE NAME: 531-317_A8.0-A8.5.dwg
XREF FILE NAME: 531-317_xVAbord.dwg
1018.00_Accessory Schedule.xls

DRAWING TITLE: RESTROOM ELEVATIONS AND ACCESSORY SCHEDULE

PROJECT TITLE: REPLACE AND MODERNIZE SURGERY / INTENSIVE CARE UNIT

DATE: 11/01/2011
PROJECT NO.: 531-317

APPROVED: CHIEF OF FACILITY MANAGEMENT SERVICE
APPROVED: MEDICAL CENTER DIRECTOR

BUILDING NUMBER: 85 | CHECKED: ST | DRAWN: SM

LOCATION: VAMC BOISE, IDAHO

DRAWING NO.: A8.5
DWG 45 OF 188

FOR CONSTRUCTION
DEPARTMENT OF VETERANS AFFAIRS

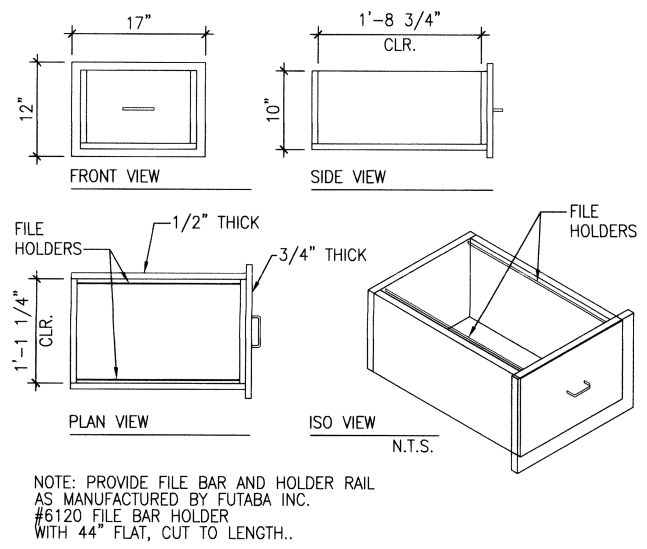

19 FILE DRAWER – TYPICAL
SCALE: 3/4" = 1'-0"

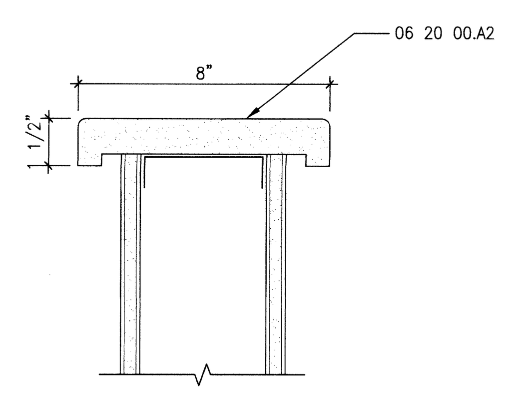

20 SOLID SURFACE WALL CAP
SCALE: 3" = 1'-0"

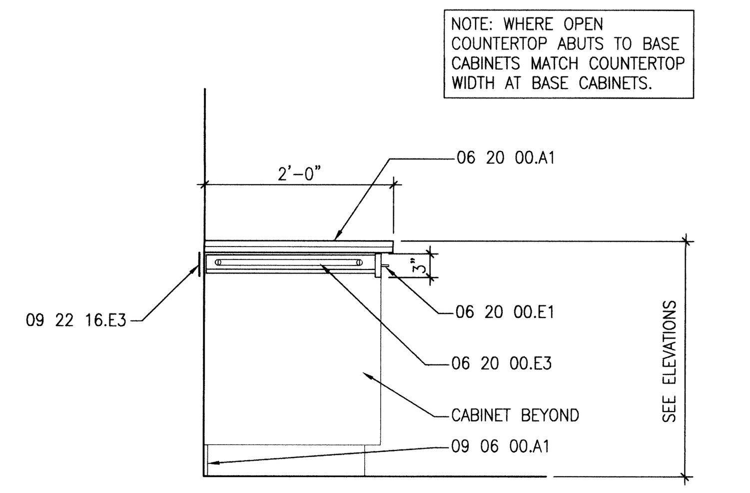

21 OPEN COUNTER WITH DRAWER
SCALE: 3/4" = 1'-0"

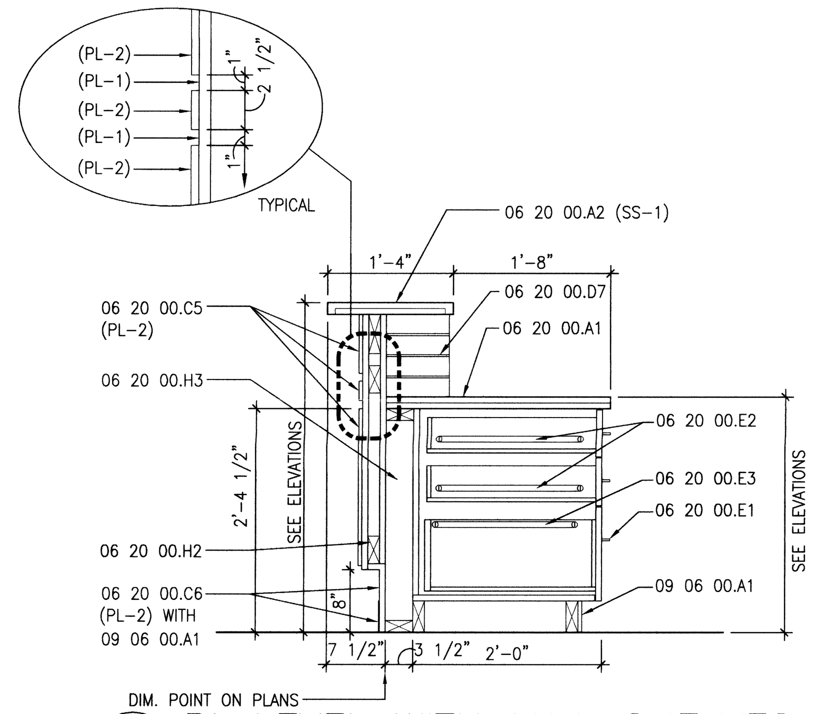

22 BI-LEVEL WITH MAIL SHELVES
SCALE: 3/4" = 1'-0"

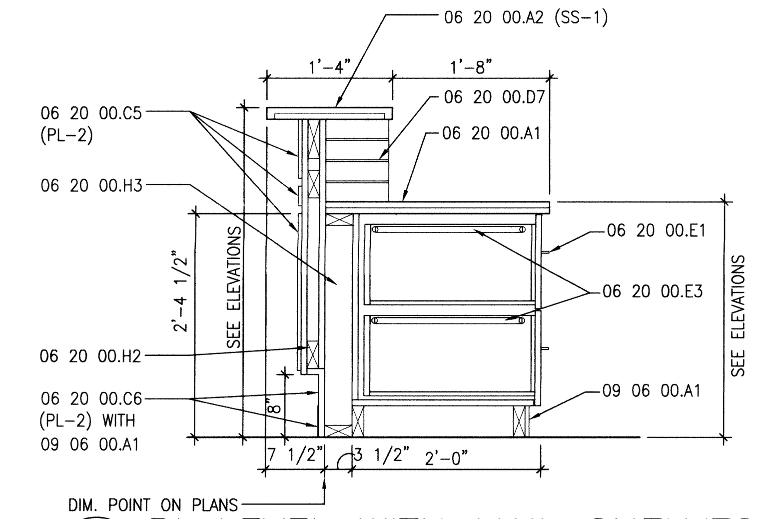

23 BI-LEVEL WITH MAIL SHELVES
SCALE: 3/4" = 1'-0"

GENERAL SHEET NOTES

A. ALL EXPOSED SURFACES OF CABINETS AND CASEWORK ARE TO BE FINISHED WITH DECORATIVE PLASTIC LAMINATE. EXPOSED SURFACES ARE ANYTHING THAT CAN BE SEEN WITH THE DOORS AND DRAWERS CLOSED. THIS INCLUDES THE UNDER SIDE AND TOP OF WALL MOUNTED CABINETS (INCLUDING SCRIBES AND FILLER PANELS), ALL SURFACES OF COUNTER SUPPORTS, AND ALL OPEN CABINET SHELVES AND SURFACES. IN ADDITION, ALL SIX SURFACES OF ALL CABINET DOORS AND ALL SIX SURFACES OF OPEN ADJUSTABLE SHELVES ARE TO BE FINISHED IN DECORATIVE PLASTIC LAMINATE. THE FRONT AND FOUR EDGES OF ALL DRAWER FRONTS ARE TO RECEIVE DECORATIVE PLASTIC LAMINATE. THE SEMI-EXPOSED INTERIOR SURFACES OF DRAWERS AND CABINETS (THOSE SURFACES THAT CAN ONLY BE SEEN WHEN THE DRAWER OR DOOR IS OPEN) ARE TO MELAMINE WITH VINYL EDGES, EXCEPT AS NOTED OTHERWISE ABOVE. THE FOUR EDGES OF ALL MELAMINE ADJUSTABLE SHELVES WITHIN CLOSED CABINETS ARE TO BE FINISHED WITH VINYL EDGING. THE UNDERSIDES OF ALL COUNTER TOPS ARE TO RECEIVE LAMINATE BACKING SHEET. ALL FILE DRAWERS MUST HAVE A MINIMUM CLEAR INSIDE HEIGHT OF 10-1/2" AND MINIMUM CLEAR INSIDE WIDTH OF 13".

REFERENCE KEYNOTES

DIVISION 06 – WOOD, PLASTICS, AND COMPOSITES	
06 20 00.A1	– PLASTIC LAMINATE COUNTERTOP
06 20 00.A2	– SOLID SURFACE COUNTERTOP
06 20 00.A3	– STONE COUNTERTOP
06 20 00.A5	– SOLID SURFACE BACKSPLASH
06 20 00.A6	– SOLID SURFACE APRON
06 20 00.C2	– PLASTIC LAMINATE BACKSPLASH
06 20 00.C3	– PLASTIC LAMINATE CLAD KNEEBRACE
06 20 00.C5	– PLASTIC LAMINATE APPLIED PANEL
06 20 00.C6	– PLASTIC LAMINATE TOE KICK
06 20 00.D3	– ADJUSTABLE SHELF – VERIFY QUANTITY WITH ELEVATIONS
06 20 00.D7	– 1/4" MASONITE HORIZONTAL DIVIDERS
06 20 00.E1	– DOOR/DRAWER WIRE PULLS
06 20 00.E2	– DRAWER SLIDES – 3/4 EXTENSION
06 20 00.E3	– DRAWER SLIDES – FULL EXTENSION
06 20 00.F1	– TACK BOARD
06 20 00.H2	– CABINET WALL FURRING – 2X4 FLAT AT 16" O.C.
06 20 00.H3	– CABINET WALL FURRING – 2X4 AT 16" O.C.
DIVISION 09 – FINISHES	
09 06 00.A1	– BASE AS SCHEDULED
09 22 16.E3	– STEEL BACKING PLATE

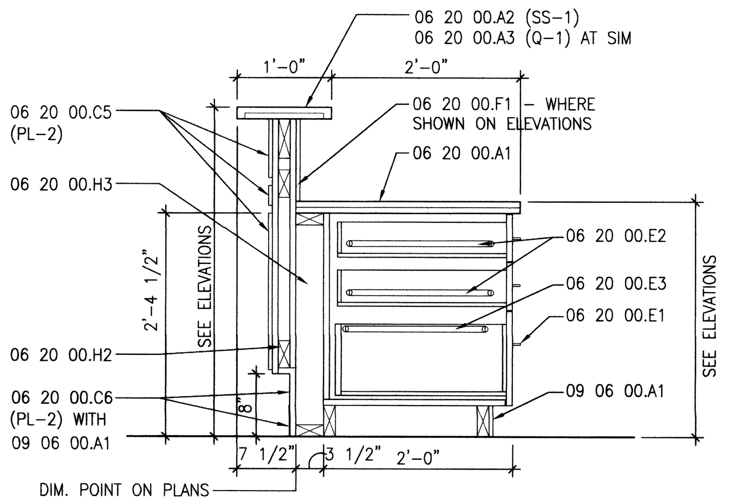

13 BI-LEVEL BASE CABINET
SCALE: 3/4" = 1'-0"

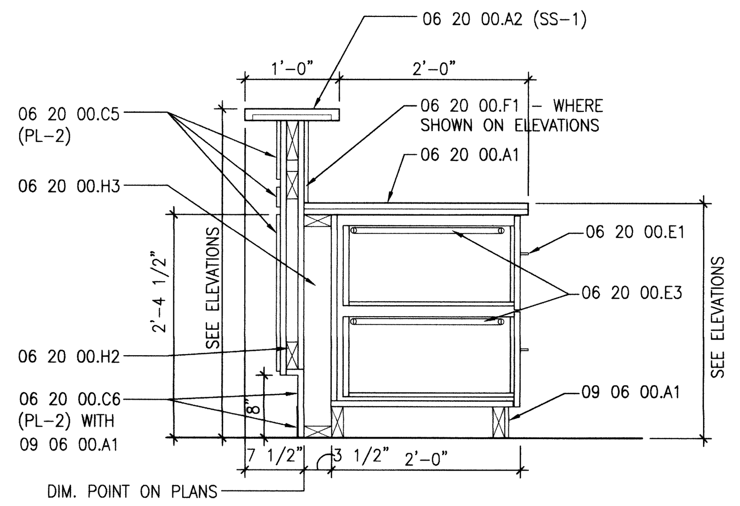

14 BI-LEVEL BASE CABINET
SCALE: 3/4" = 1'-0"

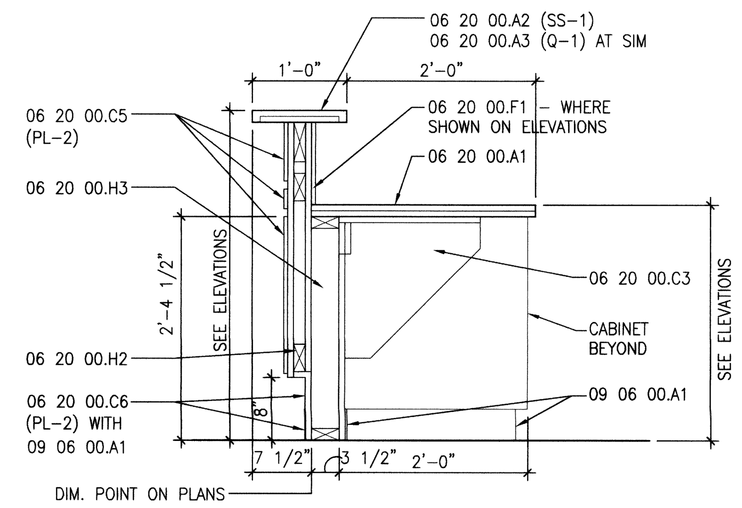

15 BI-LEVEL OPEN COUNTERTOP
SCALE: 3/4" = 1'-0"

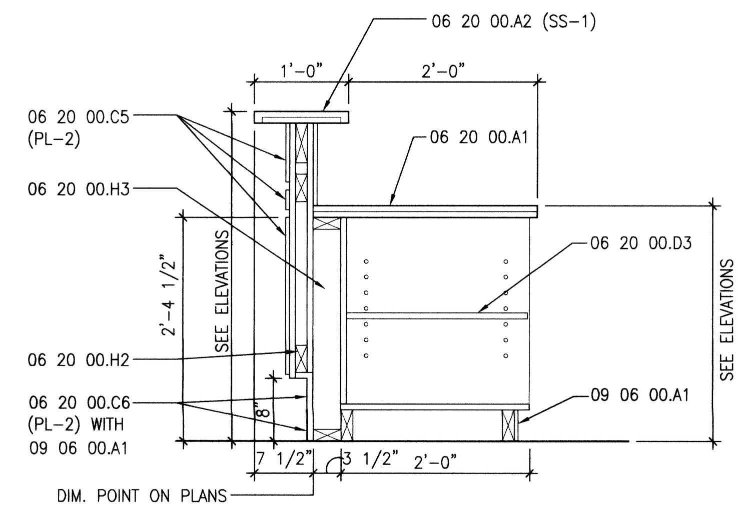

16 BI-LEVEL OPEN SHELF
SCALE: 3/4" = 1'-0"

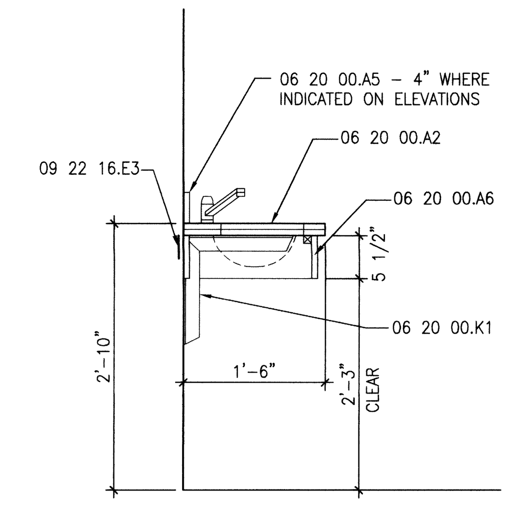

18 ACCESSIBLE SINK
SCALE: 3/4" = 1'-0"

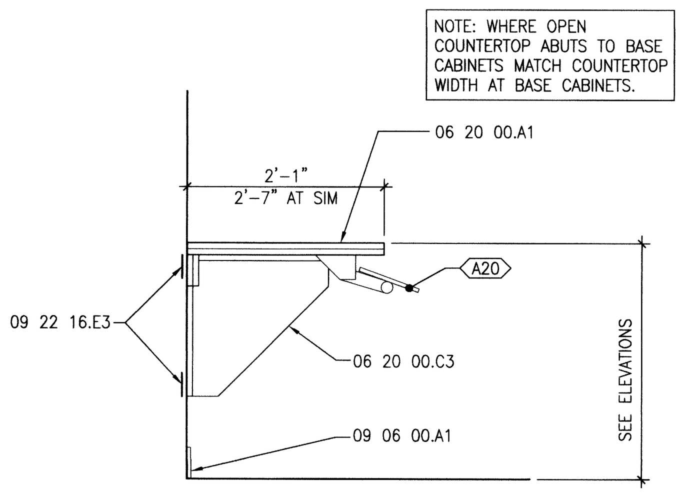

7 OPEN COUNTERTOP
SCALE: 3/4" = 1'-0"

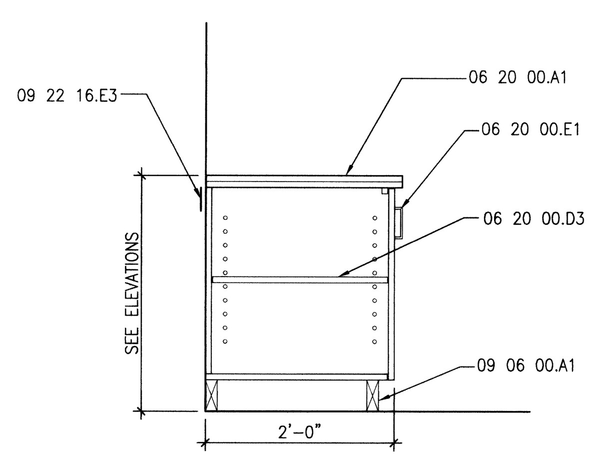

8 BASE CABINET
SCALE: 3/4" = 1'-0"

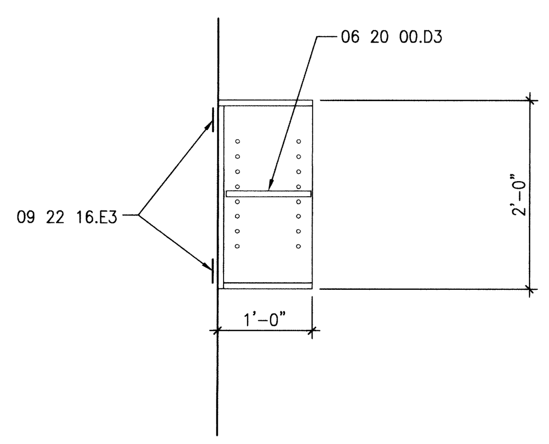

9 UPPER SHELVES
SCALE: 3/4" = 1'-0"

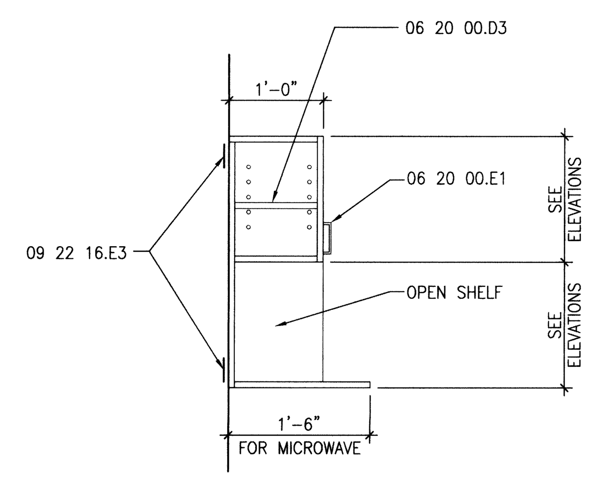

10 MICROWAVE CABINET/SHELF
SCALE: 3/4" = 1'-0"

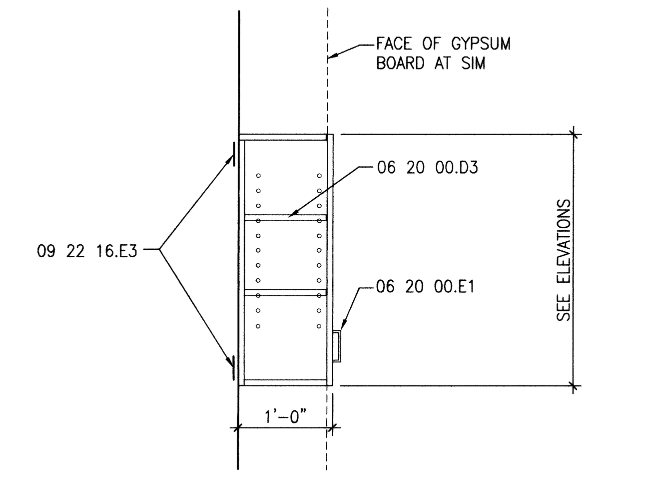

11 UPPER CABINET WITH DOOR
SCALE: 3/4" = 1'-0"

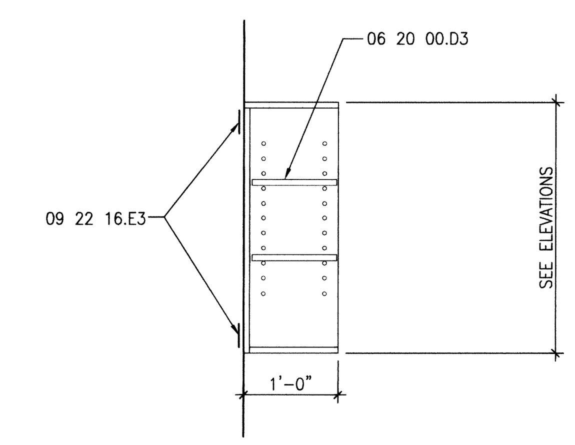

12 UPPER SHELVES
SCALE: 3/4" = 1'-0"

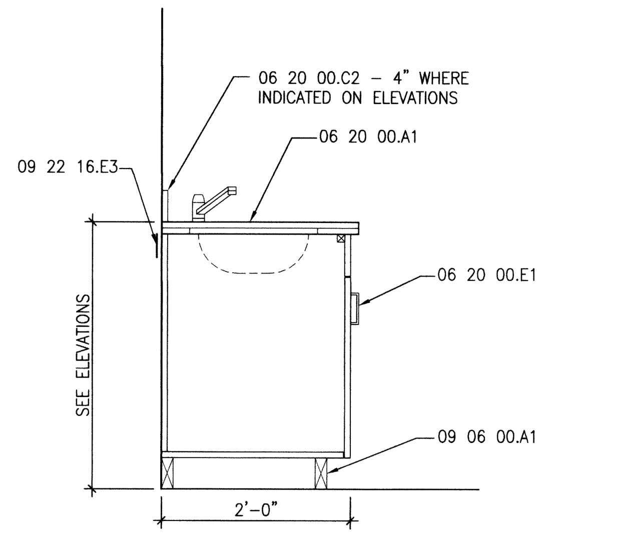

1 SINK BASE CABINET
SCALE: 3/4" = 1'-0"

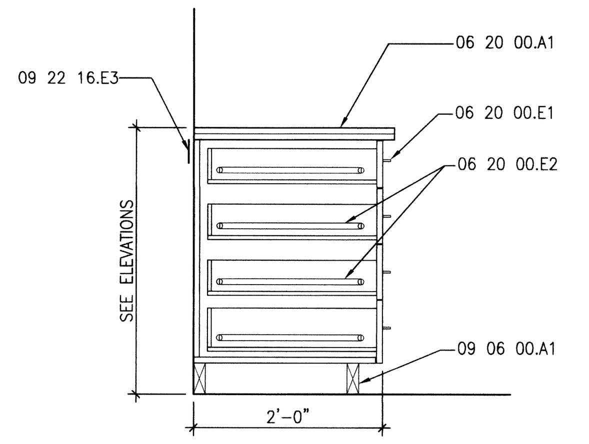

2 4 DRAWER BASE CABINET
SCALE: 3/4" = 1'-0"

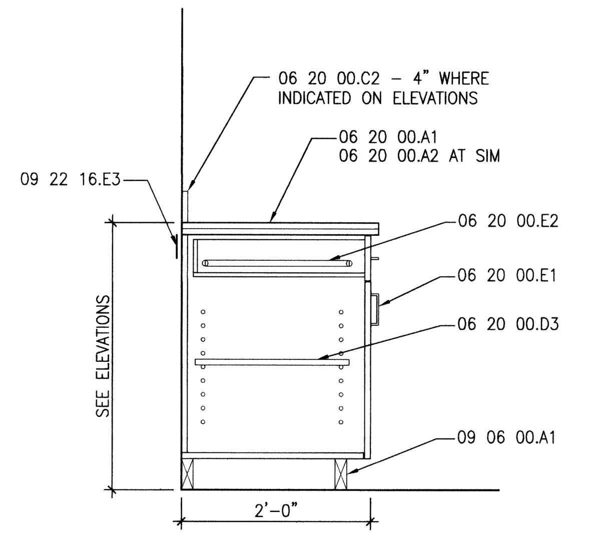

3 BASE CABINET WITH DOOR
SCALE: 3/4" = 1'-0"

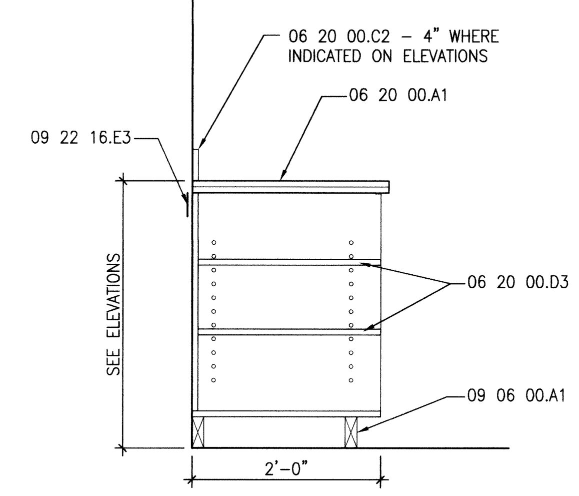

4 BASE CABINET WITH NO DOOR
SCALE: 3/4" = 1'-0"

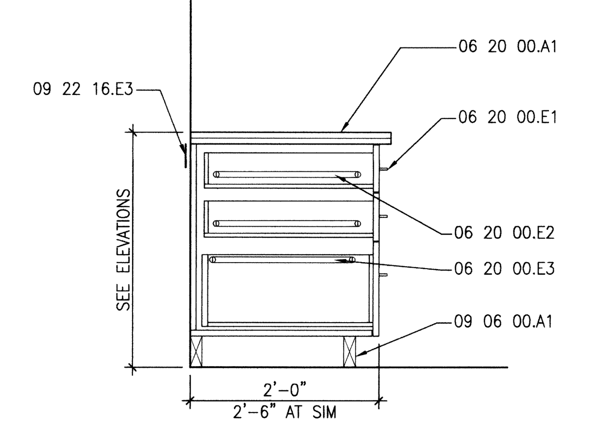

5 BASE CABINET WITH DRAWERS
SCALE: 3/4" = 1'-0"

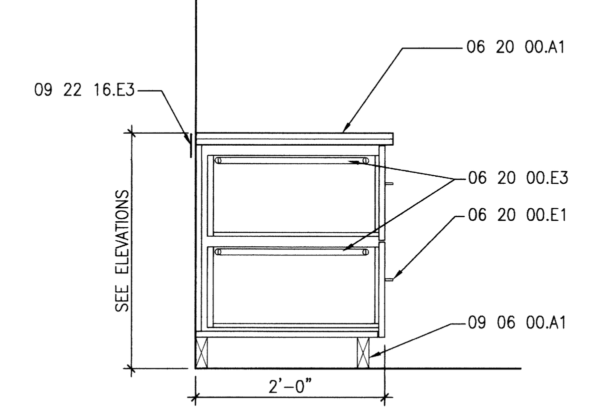

6 FILE DRAWERS BASE CABINET
SCALE: 3/4" = 1'-0"

REVISIONS | DATE

ZGA Architects and Planners, Chartered
565 W. Myrtle Street, Suite 225 Boise, Idaho 83702-7606

LICENSED ARCHITECT BOISE IDAHO AR-1885 Nov. 1, 2011 STATE OF IDAHO STEVEN C. TURNEY

CAD FILE NAME: 531-317_A8.6-A8.7.dwg
XREF FILE NAME: 531-317_xVAbord.dwg 531-317_d028.dwg

FOR CONSTRUCTION

DRAWING TITLE	INTERIOR CASEWORK SECTIONS
APPROVED: CHIEF OF FACILITY MANAGEMENT SERVICE	
APPROVED: MEDICAL CENTER DIRECTOR	
PROJECT TITLE	REPLACE AND MODERNIZE SURGERY / INTENSIVE CARE UNIT
BUILDING NUMBER	85
CHECKED	ST
DRAWN	SM
LOCATION	VAMC BOISE, IDAHO
DATE	11/01/2011
PROJECT NO.	531-317
DRAWING NO.	A8.6
DWG	46 OF 188

DEPARTMENT OF VETERANS AFFAIRS

GENERAL SHEET NOTES

A. ALL EXPOSED SURFACES OF CABINETS AND CASEWORK ARE TO BE FINISHED WITH DECORATIVE PLASTIC LAMINATE. EXPOSED SURFACES ARE ANYTHING THAT CAN BE SEEN WITH THE DOORS AND DRAWERS CLOSED. THIS INCLUDES THE UNDER SIDE AND TOP OF WALL MOUNTED CABINETS (INCLUDING SCRIBES AND FILLER PANELS), ALL SURFACES OF COUNTER SUPPORTS, AND ALL OPEN CABINET SHELVES AND SURFACES. IN ADDITION, ALL SIX SURFACES OF ALL CABINET DOORS AND ALL SIX SURFACES OF OPEN ADJUSTABLE SHELVES ARE TO BE FINISHED IN DECORATIVE PLASTIC LAMINATE. THE FRONT AND FOUR EDGES OF ALL DRAWER FRONTS ARE TO RECEIVE DECORATIVE PLASTIC LAMINATE. THE SEMI-EXPOSED INTERIOR SURFACES OF DRAWERS AND CABINETS (THOSE SURFACES THAT CAN ONLY BE SEEN WHEN THE DRAWER OR DOOR IS OPEN) ARE TO MELAMINE WITH VINYL EDGES, EXCEPT AS NOTED OTHERWISE ABOVE. THE FOUR EDGES OF ALL MELAMINE ADJUSTABLE SHELVES WITHIN CLOSED CABINETS ARE TO BE FINISHED WITH VINYL EDGING. THE UNDERSIDES OF ALL COUNTER TOPS ARE TO RECEIVE LAMINATE BACKING SHEET. ALL FILE DRAWERS MUST HAVE A MINIMUM CLEAR INSIDE HEIGHT OF 10-1/2" AND MINIMUM CLEAR INSIDE WIDTH OF 13".

REFERENCE KEYNOTES

DIVISION 06 – WOOD, PLASTICS, AND COMPOSITES		
06 20 00.A1	–	PLASTIC LAMINATE COUNTERTOP
06 20 00.A3	–	STONE COUNTERTOP
06 20 00.C3	–	PLASTIC LAMINATE CLAD KNEEBRACE
06 20 00.C8	–	PLASTIC LAMINATE CLOSURE PANEL
06 20 00.D3	–	ADJUSTABLE SHELF – VERIFY QUANTITY WITH ELEVATIONS
06 20 00.D7	–	1/4" MASONITE HORIZONTAL DIVIDERS
06 20 00.E1	–	DOOR/DRAWER WIRE PULLS
06 20 00.E2	–	DRAWER SLIDES – 3/4 EXTENSION
06 20 00.J1	–	SLOPED TOP
06 20 00.K1	–	CASEWORK SUPPORT BRACKET
06 20 00.L1	–	ACRYLIC PANEL (ECO RESIN PANEL ERP-1)
06 20 00.L2	–	3" DIAMETER BOTTOM PLATE W/ COVER
06 20 00.L3	–	3/8" SIDE BRACKETS – VERIFY QUANTITY WITH ELEVATIONS
06 20 00.L4	–	ACRYLIC PANEL PARTITION POSTS
06 20 00.L5	–	ACRYLIC PANEL PARTITION POST CAP
DIVISION 09 – FINISHES		
09 06 00.A1	–	BASE AS SCHEDULED
09 22 16.E3	–	STEEL BACKING PLATE
09 29 00.A2	–	GYPSUM BOARD – 5/8"

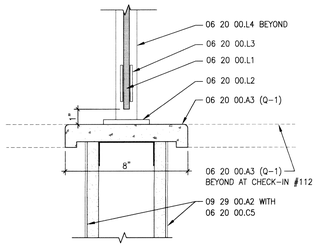

21 PARTITION WALL CAP
SCALE: 3" = 1'-0"

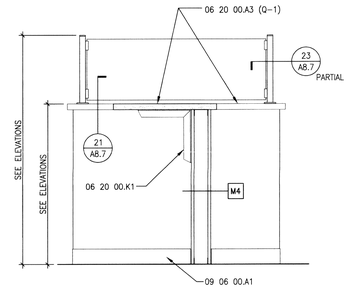

22 CHECK-IN PARTITION SECTION
SCALE: 3/4" = 1'-0"

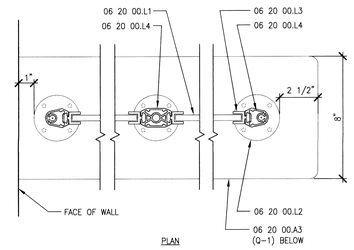

23 PRIVACY PARTITION DETAIL
SCALE: 3" = 1'-0"

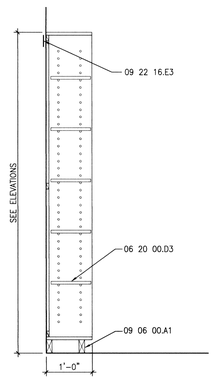

13 FULL HEIGHT SHELVES
SCALE: 3/4" = 1'-0"

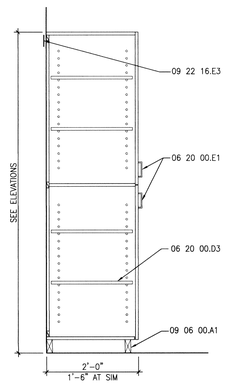

14 FULL HEIGHT CABINET
SCALE: 3/4" = 1'-0"

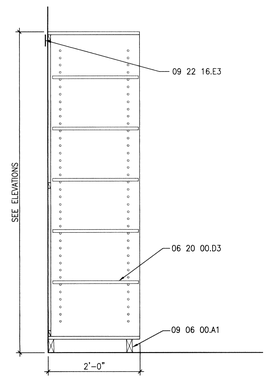

15 FULL HEIGHT SHELVES
SCALE: 3/4" = 1'-0"

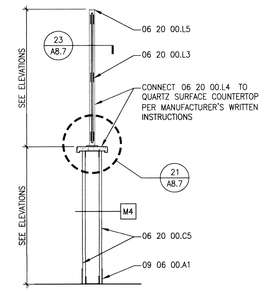

17 WAITING ROOM PARTITION WALL
SCALE: 3/4" = 1'-0"

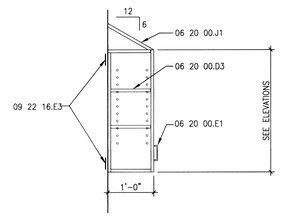

10 UPPER CABINET W/ DOOR
SCALE: 3/4" = 1'-0"

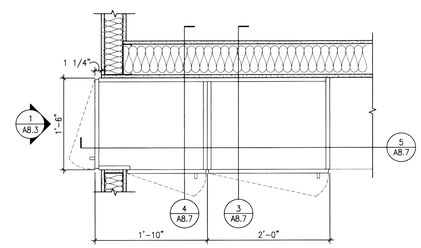

11 PATIENT ROOM CABINET PLAN
SCALE: 3" = 1'-0"

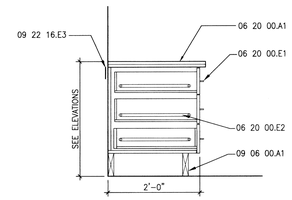

12 3 EQUAL DRAWERS
SCALE: 3/4" = 1'-0"

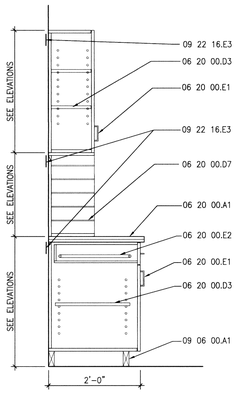

1 MAILBOX SHELVING
SCALE: 3/4" = 1'-0"

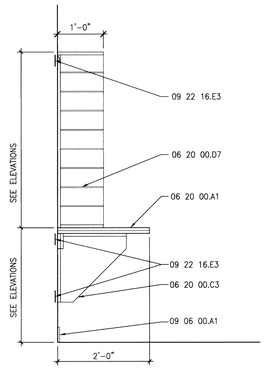

2 MAILBOX SHELVING
SCALE: 3/4" = 1'-0"

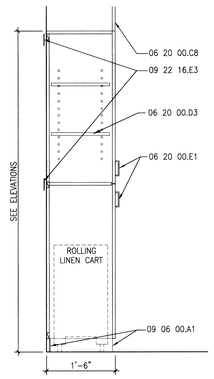

3 ICU PATIENT ROOM CLOSET
SCALE: 3/4" = 1'-0"

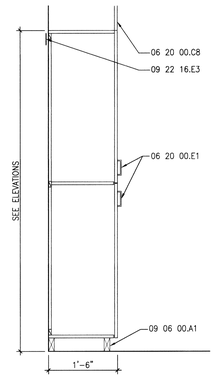

4 ICU PATIENT ROOM CLOSET
SCALE: 3/4" = 1'-0"

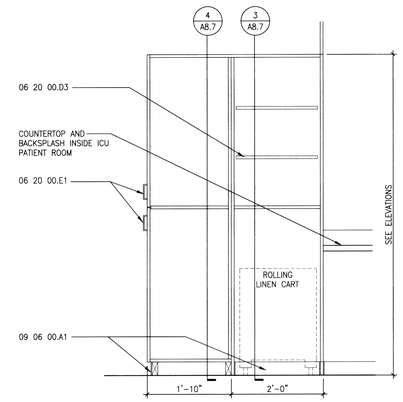

5 PATIENT ROOM/CORRIDOR CABINET
SCALE: 3/4" = 1'-0"

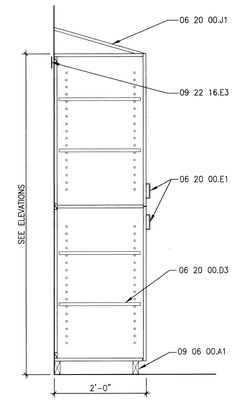

6 FULL HEIGHT CABINET
SCALE: 3/4" = 1'-0"

REVISIONS	DATE

LICENSED ARCHITECT — STATE OF IDAHO — STEVEN C. SMALLEY — AR-1885 — NOV. 11 2011

Architects and Planners, Chartered
565 W. Myrtle Street, Suite 225 Boise, Idaho 83702-7606

CAD FILE NAME: 531-317_A8.6-A8.7.dwg
XREF FILE NAME: 531-317_xVAbord.dwg, 531-317_d003.dwg, 531-317_d029.dwg, 531-317_d030.dwg, 531-317_d031.dwg

DRAWING TITLE: INTERIOR CASEWORK SECTIONS
APPROVED: CHIEF OF FACILITY MANAGEMENT SERVICE
APPROVED: MEDICAL CENTER DIRECTOR

PROJECT TITLE: REPLACE AND MODERNIZE SURGERY / INTENSIVE CARE UNIT
BUILDING NUMBER: 85
CHECKED: ST
DRAWN: SM
LOCATION: VAMC BOISE, IDAHO

DATE: 11/01/2011
PROJECT NO.: 531-317
DRAWING NO.: A8.7
DWG 47 OF 188

FOR CONSTRUCTION
DEPARTMENT OF VETERANS AFFAIRS

EQUIPMENT SCHEDULE

TAG	DESCRIPTION	FURNISHED	INSTALLED	MOUNTING	BACKING Y/N	MODEL #
E1	CONF/CLASSROOM TELEVISION AND BRACKET	OWNER	CONTRACTOR	WALL	YES	
E2	TELEVISION AND BRACKET	OWNER	CONTRACTOR	WALL	YES	
E3	PATIENT TELEVISION AND BRACKET	OWNER	CONTRACTOR	WALL	YES	
E4	O.R. WALL MONITOR	OWNER	CONTRACTOR	WALL	YES	
E5	WELCH ALLEN UNIT	OWNER	CONTRACTOR	WALL	NO	
E6	RESERVED					
E7	WALL PHONE	OWNER	CONTRACTOR	WALL	NO	
E8	HILL-ROM DIGITAL CLOCK	OWNER	CONTRACTOR	FLOOR	NO	
E9	VERNACARE	OWNER	CONTRACTOR	FLOOR	NO	
E10	U.C. REFRIGERATOR	OWNER	CONTRACTOR	FLOOR	NO	
E11	MEDICINE REFRIGERATOR	OWNER	CONTRACTOR	FLOOR	NO	SANYO
E12	SWINGETTE	OWNER	CONTRACTOR	FLOOR	NO	
E30	18x60 WIRE SHELVING	OWNER	OWNER	FLOOR	N/A	
E31	ACUDOSE DRUG UNIT	OWNER	OWNER	FLOOR	N/A	
E32	AIRWAY CART	OWNER	OWNER	FLOOR	N/A	
E33	ANESTHESIA MACHINE	OWNER	OWNER	FLOOR	N/A	
E34	ANESTHESIA SUPPLY CART	OWNER	OWNER	FLOOR	N/A	
E35	AUTOCLAVE/STERILIZER	OWNER	OWNER	FLOOR	N/A	
E36	AUTOPULSE	OWNER	OWNER	FLOOR	N/A	
E37	BACK TABLE	OWNER	OWNER	FLOOR	N/A	
E38	BAIR HUGGER	OWNER	OWNER	FLOOR	N/A	
E39	BARIATRIC ARJO CEILING LIFT	OWNER	OWNR/CONT	CEILING	YES	ELECTRICAL ROUGH IN BY CONTRACTOR
E40	BCE SCANNER	OWNER	OWNER	MILLWORK	N/A	
E41	BCMA SCANNER	OWNER	OWNER	MILLWORK	N/A	
E42	BIO-TRASH CAN	OWNER	OWNER	FLOOR	N/A	
E43	BLADDER SCANNER	OWNER	OWNER	FLOOR	N/A	
E44	BLANKET WARMER	OWNER	OWNER	VARIES	N/A	
E45	BLOCK CART	OWNER	OWNER	FLOOR	N/A	
E46	BLOOD GLUCOSE DOCKING STATION	OWNER	OWNER	MILLWORK	N/A	
E47	BRONCHOSCOPE TOWER	OWNER	OWNER	FLOOR	N/A	
E48	BRONCHOSCOPY CART	OWNER	OWNER	FLOOR	N/A	
E49	CAST CART	OWNER	OWNER	FLOOR	N/A	
E50	CELL SAVER	OWNER	OWNER	FLOOR	N/A	
E51	CENTRAL SUPPLY CART	OWNER	OWNER	FLOOR	N/A	
E52	COFFEE MAKER	OWNER	OWNER	MILLWORK	N/A	
E53	COMPUTER W/ KEYBOARD & MONITOR	OWNER	OWNER	MILLWORK	N/A	
E54	COPY/FAX MACHINE	OWNER	OWNER	FLOOR	N/A	
E55	CRASH CART	OWNER	OWNER	FLOOR	N/A	
E56	DIALYSIS MACHINE	OWNER	OWNER	FLOOR	N/A	FRESENIUS 2008K
E57	DOUBLE RING STAND	OWNER	OWNER	FLOOR	N/A	
E58	DRESSING/SUPPLY CART	OWNER	OWNER	FLOOR	N/A	
E59	DYNAHEX CART	OWNER	OWNER	FLOOR	N/A	
E60	EKG MACHINE	OWNER	OWNER	FLOOR	N/A	
E61	FLUID WARMER	OWNER	OWNER	FLOOR	N/A	
E62	FRACTURE TABLE	OWNER	OWNER	FLOOR	N/A	
E63	GARBAGE CART	OWNER	OWNER	FLOOR	N/A	
E64	GLIDESCOPE	OWNER	OWNER	FLOOR	N/A	
E65	GURNEY	OWNER	OWNER	FLOOR	N/A	
E66	H2O DISPENSER - TOUCHLESS	OWNER	OWNER	FLOOR	N/A	
E67	H2O SYMPHONY DISPENSER	OWNER	OWNER	MILLWORK	N/A	
E68	RESERVED					
E69	I.V. POLE	OWNER	OWNER	FLOOR	N/A	

TAG	DESCRIPTION	FURNISHED	INSTALLED	MOUNTING	BACKING Y/N	MODEL #
E70	I.V. POLE (W/ BAIR HUGGER WARMERS)	OWNER	OWNER	FLOOR	N/A	
E71	I.V. POLE FOR ARTHROSCOPY	OWNER	OWNER	FLOOR	N/A	
E72	I.V. PUMPS	OWNER	OWNER	MILLWORK	N/A	
E73	ICU PATIENT BED	OWNER	OWNER	FLOOR	N/A	
E74	IPOD DOCKING STATION	OWNER	OWNER	MILLWORK	N/A	
E75	LABELERS	OWNER	OWNER	MILLWORK	N/A	
E76	LARGE STORAGE UNIT	OWNER	OWNER	FLOOR	N/A	
E77	LINEN CART	OWNER	OWNER	FLOOR	N/A	
E78	LONG BACK TABLE	OWNER	OWNER	FLOOR	N/A	
E79	MALIGNANT HYPERTHERMIA CART	OWNER	OWNER	FLOOR	N/A	
E80	MAYO STAND	OWNER	OWNER	FLOOR	N/A	
E81	MEDICATION LABEL TAPE	OWNER	OWNER	MILLWORK	N/A	
E82	MICROWAVE	OWNER	OWNER	MILLWORK	N/A	
E83	MINI C-ARM	OWNER	OWNER	FLOOR	N/A	
E84	MISCELANEOUS PRINTER	OWNER	OWNER	MILLWORK	N/A	
E85	NEPTUNE SUCTION UNIT	OWNER	OWNER	FLOOR	N/A	
E86	NITROGEN CYLINDER TANK ON ROLLING CART	OWNER	OWNER	FLOOR	N/A	
E87	O.R. TABLE	OWNER	OWNER	FLOOR	N/A	
E88	OMNICELL - DOUBLE	OWNER	OWNER	FLOOR	N/A	
E89	OMNICELL - SINGLE	OWNER	OWNER	FLOOR	N/A	
E90	OMNICELL - TRIPLE	OWNER	OWNER	FLOOR	N/A	
E91	OVERBED TABLE	OWNER	OWNER	FLOOR	N/A	
E92	OVERHEAD CHICK TABLE	OWNER	OWNER	FLOOR	N/A	
E93	PACS X-RAY VIEWER	OWNER	OWNER	MILLWORK	N/A	
E94	PACU PATIENT BED	OWNER	OWNER	FLOOR	N/A	
E95	PATIENT PHONE	OWNER	OWNER	MILLWORK	N/A	
E96	PHILIPS MONITOR	OWNER	OWNER	MILLWORK	N/A	
E97	PHILIPS PRINTER	OWNER	OWNER	MILLWORK	N/A	
E98	PNEUMATIC TUBE	OWNER	OWNER	FLOOR	N/A	
E99	PREP/UTILITY CART	OWNER	OWNER	FLOOR	N/A	
E100	PRINTER HP LASERJET 4200/4300	OWNER	OWNER	MILLWORK	N/A	
E101	PRINTER HP LASERJET 6P	OWNER	OWNER	MILLWORK	N/A	
E102	PROCEDURE CART	OWNER	OWNER	FLOOR	N/A	
E103	RECYCLE BIN	OWNER	OWNER	FLOOR	N/A	
E104	REFRIGERATOR (FULL SIZE)	OWNER	OWNER	FLOOR	N/A	
E105	RESERVED					
E106	ROLLING STOOL	OWNER	OWNER	FLOOR	N/A	
E107	ROLLING UROLOGY BUCKETS	OWNER	OWNER	FLOOR	N/A	
E108	SHARPS ROLLING CART	OWNER	OWNER	FLOOR	N/A	
E109	SHREDDER BIN	OWNER	OWNER	FLOOR	N/A	
E110	SINGLE MONITOR	OWNER	OWNER	MILLWORK	N/A	
E111	SMALL STORAGE UNIT	OWNER	OWNER	FLOOR	N/A	
E112	FRACTURE TABLE CART	OWNER	OWNER	FLOOR	N/A	
E113	THERMOMETER	OWNER	OWNER	MILLWORK	N/A	
E114	ULTRASOUND UNIT	OWNER	OWNER	FLOOR	N/A	
E115	VENTILATOR	OWNER	OWNER	FLOOR	N/A	
E116	WHEELCHAIR	OWNER	OWNER	FLOOR	N/A	
E117	X-RAY IMAGE DOWNLOADING STATION	OWNER	OWNER	FLOOR	N/A	
E118	ICU BOOM	OWNER	OWNR/CONT	CEILING	YES	ELEC/MED-GAS ROUGH IN BY CONTRACTOR
E119	SURGERY ANESTHESIA BOOM	OWNER	OWNR/CONT	CEILING	YES	ELEC/MED-GAS ROUGH IN BY CONTRACTOR
E120	SURGERY EQUIPMENT BOOM	OWNER	OWNR/CONT	CEILING	YES	ELEC/MED-GAS ROUGH IN BY CONTRACTOR
E121	SURGERY LIGHT/MONITOR BOOM	OWNER	OWNR/CONT	CEILING	YES	ELECTRICAL ROUGH IN BY CONTRACTOR

FOR CONSTRUCTION

REVISIONS	DATE

Architects and Planners, Chartered
565 W. Myrtle Street, Suite 225 Boise, Idaho 83702-7606

CAD FILE NAME: 531-317_A8.8.dwg
XREF FILE NAME: 531-317_xVAbord.dwg 1018.00_Equipment Schedule.xls

DRAWING TITLE: EQUIPMENT SCHEDULE

PROJECT TITLE: REPLACE AND MODERNIZE SURGERY / INTENSIVE CARE UNIT

DATE: 11/01/2011
PROJECT NO.: 531-317

APPROVED: CHIEF OF FACILITY MANAGEMENT SERVICE
APPROVED: MEDICAL CENTER DIRECTOR

BUILDING NUMBER: 85
CHECKED: ST
DRAWN: SM
LOCATION: VAMC BOISE, IDAHO

DRAWING NO.: A8.8
DWG 48 OF 188

DEPARTMENT OF VETERANS AFFAIRS

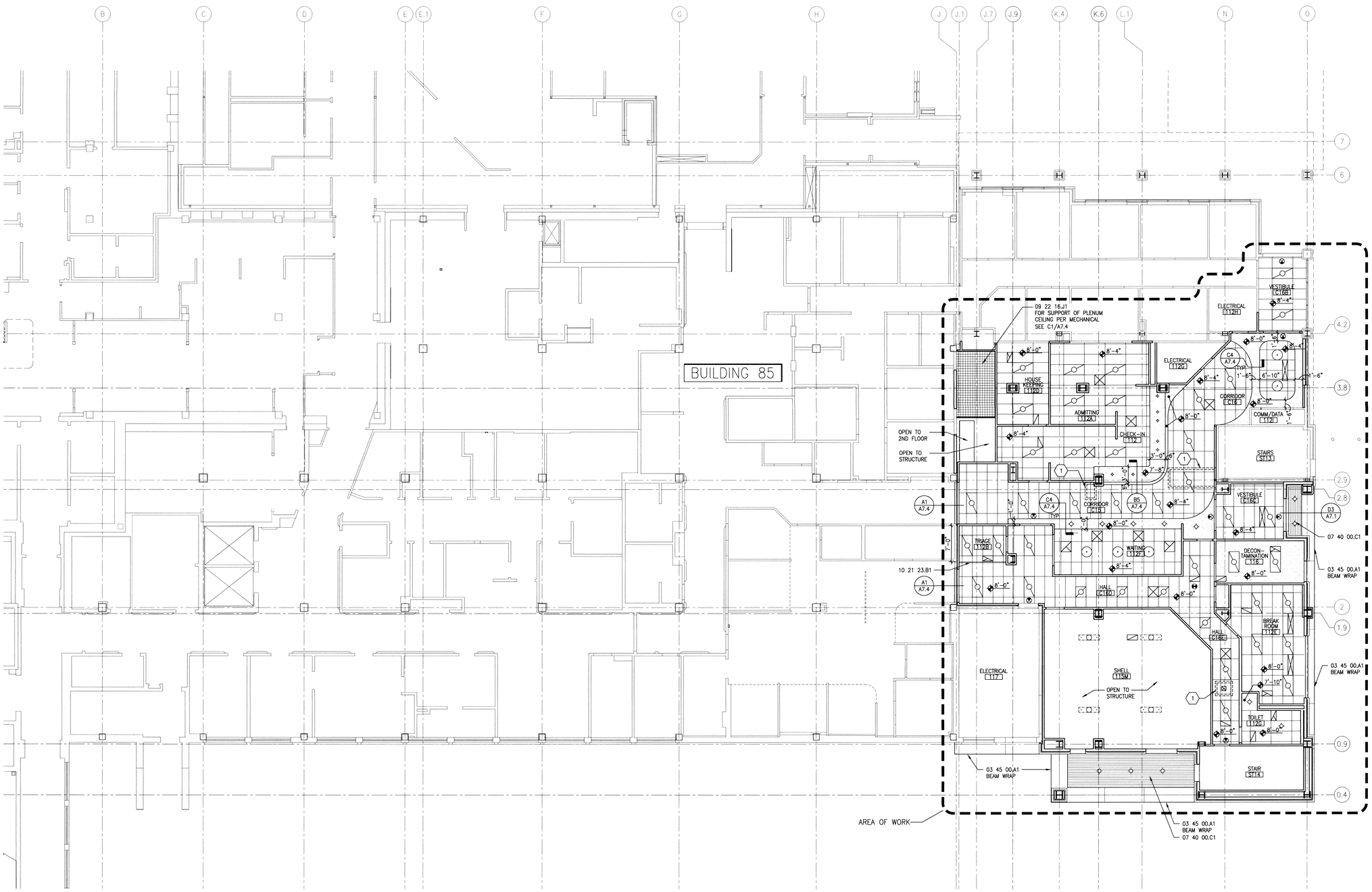

BUILDING 85 – FIRST FLOOR REFLECTED CEILING PLAN

SCALE: 1/8" = 1'-0"

0 4' 8' 16'

PLAN NORTH

GENERAL SHEET NOTES

A. REFER TO ROOM FINISH SCHEDULE FOR SPECIFIC CEILING DESIGNATIONS

B. ROOM FINISH SCHEDULE IN SPECIFICATIONS SECTION 09 06 00

C. SPRINKLER HEADS AND ALL CEILING MOUNTED ELECTRICAL DEVICES TO BE AT CENTER OF CEILING PANEL AS DEFINED BY THE PANEL PATTERN

REVEAL IN CEILING PANEL WHERE APPLICABLE

D. HVAC DIFFUSERS SHOWN FOR COORDINATION ONLY – SEE MECHANICAL HVAC PLANS FOR SIZES OR GRILLES, ETC

E. LIGHTING AND ELECTRICAL DEVICES SHOWN FOR COORDINATION ONLY – SEE ELECTRICAL PLANS FOR MORE INFORMATION ON LIGHTING

F. EXPOSED STRUCTURE, WHERE OCCURS, IS NOT SHOWN FOR CLARITY

REFLECTED CEILING PLAN LEGEND

	PENDANT LUMINAIRE
	1' x 4' PENDANT LUMINAIRE
	2' x 2' RECESSED LUMINAIRE
	2' x 4' RECESSED LUMINAIRE
	DECORATIVE PENDANT
	RECESSED CAN LUMINAIRE
	CEILING MOUNTED EXIT LIGHT
	WALL MOUNTED EXIT LIGHT
	1' X 2' RETURN AIR GRILLE
	2' X 2' RETURN AIR GRILLE
	1' X 2' DIFFUSER
	2' X 2' DIFFUSER
	1' X 4' DIFFUSER
	1' X 2' EXHAUST
	2' X 2' EXHAUST
	10" X 10" EXHAUST
+8'-0"	ELEVATION A.F.F.

CEILING KEYNOTES

1. HORIZONTAL SHAFT ASSEMBLY ABOVE. SEE DETAIL D1/A7.4. FIELD COORDINATE WITH MECHANICAL CONTRACTOR FOR DAMPER LOCATIONS.

REFERENCE KEYNOTES

DIVISION 03 – CONCRETE	
03 45 00.A1	– PRECAST CONCRETE
DIVISION 07 – THERMAL AND MOISTURE PROTECTION	
07 40 00.C1	– PRE-FINISHED METAL SOFFIT PANELS – VENTED
DIVISION 09 – FINISHES	
09 22 16.J1	– STEEL JOIST – 362S125-30 AT 24" O.C.
DIVISION 10 – SPECIALTIES	
10 21 23.B1	– CUBICLE CURTAIN TRACK

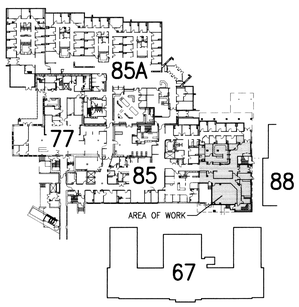

FIRST FLOOR KEY PLAN

NOT TO SCALE

PLAN NORTH

FOR CONSTRUCTION

REVISIONS	DATE

LICENSED ARCHITECT
AR-1885
STATE OF IDAHO
STEVEN C. TURNER

ZGA Architects and Planners, Chartered
565 W. Myrtle Street, Suite 225 Boise, Idaho 83702-7606

CAD FILE NAME: 531-317_A8.1.dwg

XREF FILE NAME: 85A1FL.dwg
85_GRID.dwg
531-317_xVAbord.dwg

DRAWING TITLE: FIRST FLOOR REFLECTED CEILING PLAN	PROJECT TITLE: REPLACE AND MODERNIZE SURGERY / INTENSIVE CARE UNIT		DATE: 11/01/2011
			PROJECT NO.: 531-317
APPROVED: CHIEF OF FACILITY MANAGEMENT SERVICE	BUILDING NUMBER: 85	CHECKED: ST / DRAWN: SM	DRAWING NO.: A9.1
APPROVED: MEDICAL CENTER DIRECTOR	LOCATION: VAMC BOISE, IDAHO		DWG 49 OF 188

DEPARTMENT OF VETERANS AFFAIRS

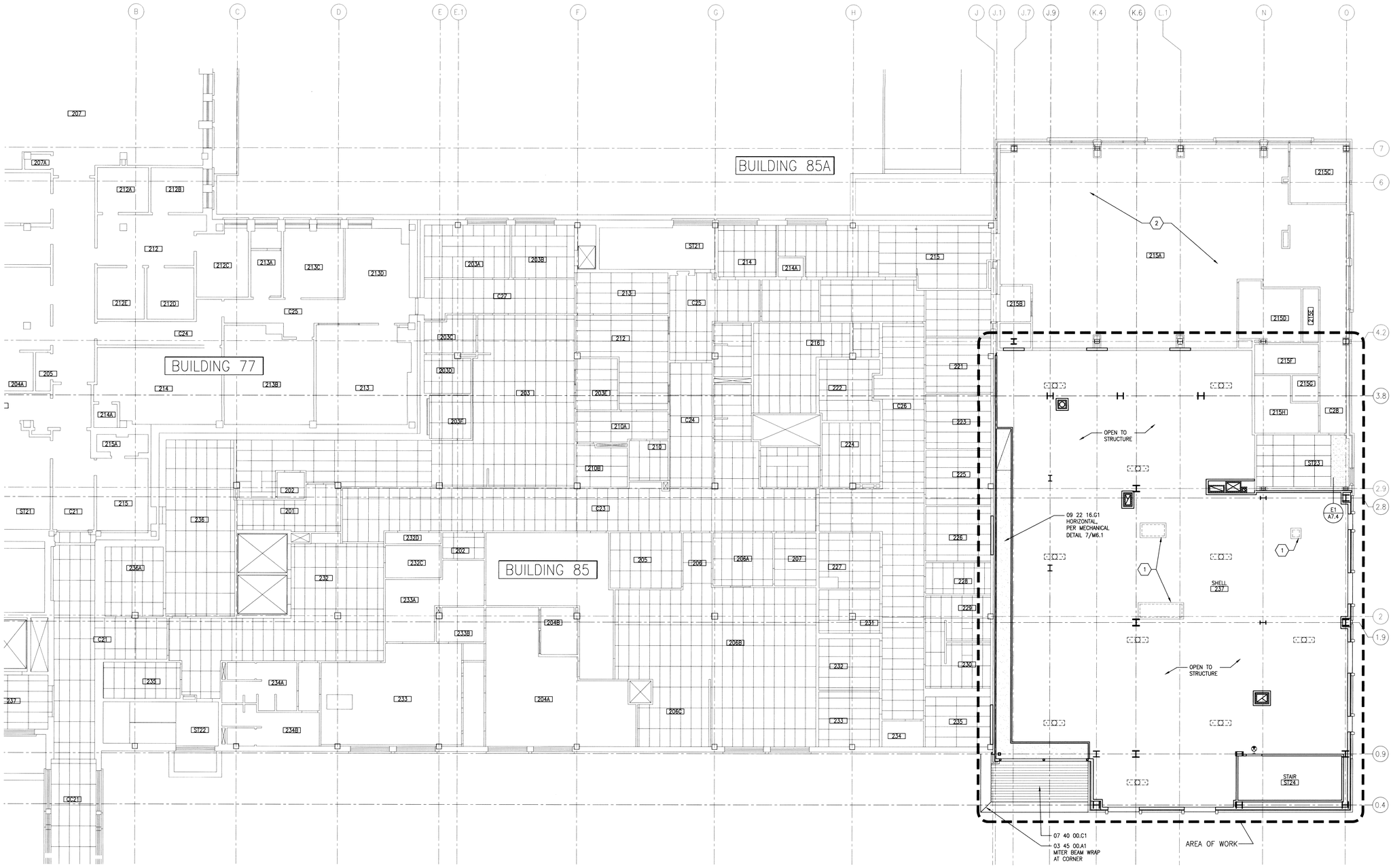

BUILDING 85 – SECOND FLOOR REFLECTED CEILING PLAN

SCALE: 1/8" = 1'-0"

0 4' 8' 16'

PLAN NORTH

GENERAL SHEET NOTES

A. REFER TO ROOM FINISH SCHEDULE FOR SPECIFIC CEILING DESIGNATIONS

B. ROOM FINISH SCHEDULE IN SPECIFICATIONS SECTION 09 06 00

C. SPRINKLER HEADS AND ALL CEILING MOUNTED ELECTRICAL DEVICES TO BE AT CENTER OF CEILING PANEL AS DEFINED BY THE PANEL PATTERN

REVEAL IN CEILING PANEL WHERE APPLICABLE

D. HVAC DIFFUSERS SHOWN FOR COORDINATION ONLY – SEE MECHANICAL HVAC PLANS FOR SIZES OR GRILLES, ETC

E. LIGHTING AND ELECTRICAL DEVICES SHOWN FOR COORDINATION ONLY – SEE ELECTRICAL PLANS FOR MORE INFORMATION ON LIGHTING

F. EXPOSED STRUCTURE, WHERE OCCURS, IS NOT SHOWN FOR CLARITY

REFLECTED CEILING PLAN LEGEND

	1' x 4' PENDANT LUMINAIRE
	WALL MOUNTED EXIT LIGHT

CEILING KEYNOTES

1. HORIZONTAL SHAFT ASSEMBLY ABOVE. SEE DETAIL D1/A7.4. FIELD COORDINATE WITH MECHANICAL CONTRACTOR FOR DAMPER LOCATIONS.
2. REFER TO SHEET P2.5A FOR EXTENT OF ABOVE CEILING PLUMBING WORK. ANY CEILING GRIDS OR TILES DAMAGED DURING ABOVE CEILING WORK SHALL BE REPLACED WITH PRODUCTS MATCHING EXISTING. WORK IN THIS LAB AREA WILL NEED TO BE PERFORMED DURING NON-PEAK HOURS (AFTER 4:30PM AND WEEKENDS). THIS LAB WILL CONTINUE TO OPERATE THROUGHOUT THE CONSTRUCTION PERIOD.

REFERENCE KEYNOTES

DIVISION 03 – CONCRETE	
03 45 00.A1	– PRECAST CONCRETE
DIVISION 07 – THERMAL AND MOISTURE PROTECTION	
07 40 00.C1	– PRE-FINISHED METAL SOFFIT PANELS – VENTED
DIVISION 09 – FINISHES	
09 22 16.G1	– 2 1/2" C-H STUDS (212CH-34) AT 24" O.C.

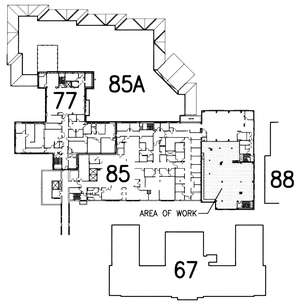

SECOND FLOOR KEY PLAN

NOT TO SCALE

PLAN NORTH

FOR CONSTRUCTION

REVISIONS	DATE

LICENSED ARCHITECT
STATE OF IDAHO
STEVEN C. TARKEY
AR-1885
Nov. 1, 2011

ZGA Architects and Planners, Chartered
565 W. Myrtle Street, Suite 225 Boise, Idaho 83702-7606

CAD FILE NAME: 531-317_A9.2.dwg

XREF FILE NAME: 85A2FL_RCP.dwg
85_GRID.dwg
531-317_xVAbord.dwg
85A2FL_KEYPLAN.dwg

DRAWING TITLE: SECOND FLOOR REFLECTED CEILING PLAN	PROJECT TITLE: REPLACE AND MODERNIZE SURGERY / INTENSIVE CARE UNIT		DATE: 11/01/2011
			PROJECT NO.: 531-317
APPROVED: CHIEF OF FACILITY MANAGEMENT SERVICE	BUILDING NUMBER: 85	CHECKED: ST / DRAWN: SM	DRAWING NO.: A9.2
APPROVED: MEDICAL CENTER DIRECTOR	LOCATION: VAMC BOISE, IDAHO		DWG 50 OF 188

DEPARTMENT OF VETERANS AFFAIRS