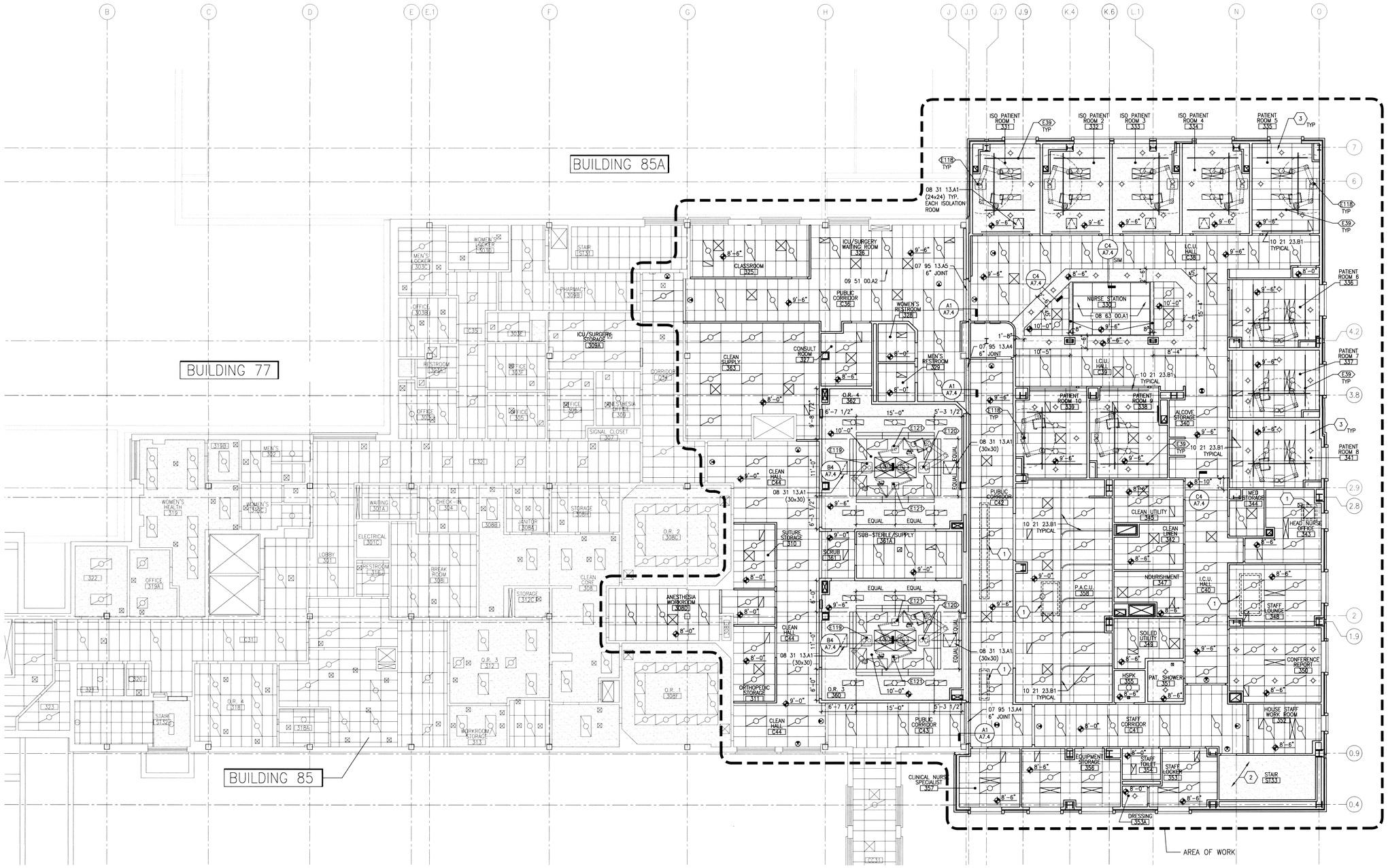

BUILDING 85 – THIRD FLOOR REFLECTED CEILING PLAN

SCALE: 1/8" = 1'-0"

0 4' 8' 16'

PLAN NORTH

GENERAL SHEET NOTES

A. REFER TO ROOM FINISH SCHEDULE FOR SPECIFIC CEILING DESIGNATIONS

B. ROOM FINISH SCHEDULE IN SPECIFICATIONS SECTION 09 06 00

C. SPRINKLER HEADS AND ALL CEILING MOUNTED ELECTRICAL DEVICES TO BE AT CENTER OF CEILING PANEL AS DEFINED BY THE PANEL PATTERN

REVEAL IN CEILING PANEL WHERE APPLICABLE

D. HVAC DIFFUSERS SHOWN FOR COORDINATION ONLY – SEE MECHANICAL HVAC PLANS FOR SIZES OR GRILLES, ETC

E. LIGHTING AND ELECTRICAL DEVICES SHOWN FOR COORDINATION ONLY – SEE ELECTRICAL PLANS FOR MORE INFORMATION ON LIGHTING

F. EXPOSED STRUCTURE, WHERE OCCURS, IS NOT SHOWN FOR CLARITY

REFLECTED CEILING PLAN LEGEND

	1' x 4' PENDANT LUMINAIRE
	2' x 2' RECESSED LUMINAIRE
	1' x 4' RECESSED LUMINAIRE
	2' x 4' RECESSED LUMINAIRE
	DECORATIVE PENDANT
	RECESSED CAN LUMINAIRE
	CEILING MOUNTED EXIT LIGHT
	1' X 2' RETURN AIR GRILLE
	2' X 2' RETURN AIR GRILLE
	1' X 2' DIFFUSER
	2' X 2' DIFFUSER
	1' X 4' DIFFUSER
	LINEAR SLOT DIFFUSER
	2' X 4' LAMINER FLOW
	1' X 2' EXHAUST
	2' X 2' EXHAUST
	10" X 10" EXHAUST
	ACCESS DOOR/PANEL
+8'-0"	ELEVATION A.F.F.

CEILING KEYNOTES

1. HORIZONTAL SHAFT ASSEMBLY ABOVE. SEE DETAIL D1/A7.4. FIELD COORDINATE WITH MECHANICAL CONTRACTOR FOR DAMPER LOCATIONS.
2. GYPSUM BOARD CEILING SHOWN OCCURS AT PENTHOUSE CEILING LEVEL ABOVE.
3. CONTRACTOR TO INSTALL SUSPENDED CEILING SYSTEMS FOR RECESSED FIXED RAILS AFTER OWNER'S INSTALLATION

REFERENCE KEYNOTES

DIVISION 07 – THERMAL AND MOISTURE PROTECTION	
07 95 13.A4	– CEILING EXPANSION JOINT COVER
07 95 13.A5	– CEILING-TO-WALL EXPANSION JOINT COVER
DIVISION 08 – OPENINGS	
08 31 13.A1	– ACCESS DOOR
08 63 00.A1	– ALUMINUM-FRAMED SKYLIGHT
DIVISION 09 – FINISHES	
09 51 00.A2	– PROVIDE ADDITIONAL CEILING TRACK NECESSARY FOR DESIGN ILLUSTRATED
DIVISION 10 – SPECIALTIES	
10 21 23.B1	– CUBICLE CURTAIN TRACK

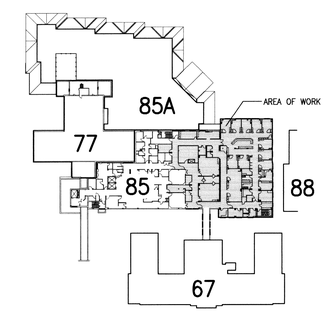

THIRD FLOOR KEY PLAN

SCALE: 1/8" = 1'-0"

PLAN NORTH

FOR CONSTRUCTION

REVISIONS	DATE

LICENSED ARCHITECT STATE OF IDAHO

Architects and Planners, Chartered
565 W. Myrtle Street, Suite 225 Boise, Idaho 83702-7606

CAD FILE NAME: 531-317_A9.3A.dwg

XREF FILE NAME: 85A3FL_RCP.dwg, 85_GRID.dwg, 85AFL_KEYPLAN.dwg, 531-317_xVAbord.dwg

DRAWING TITLE: THIRD FLOOR REFLECTED CEILING PLAN

PROJECT TITLE: REPLACE AND MODERNIZE SURGERY / INTENSIVE CARE UNIT

DATE: 11/01/2011

PROJECT NO.: 531-317

APPROVED: CHIEF OF FACILITY MANAGEMENT SERVICE

BUILDING NUMBER: 85 | CHECKED: ST | DRAWN: SM

DRAWING NO.: A9.3

APPROVED: MEDICAL CENTER DIRECTOR

LOCATION: VAMC BOISE, IDAHO

DWG 51 OF 188

DEPARTMENT OF VETERANS AFFAIRS

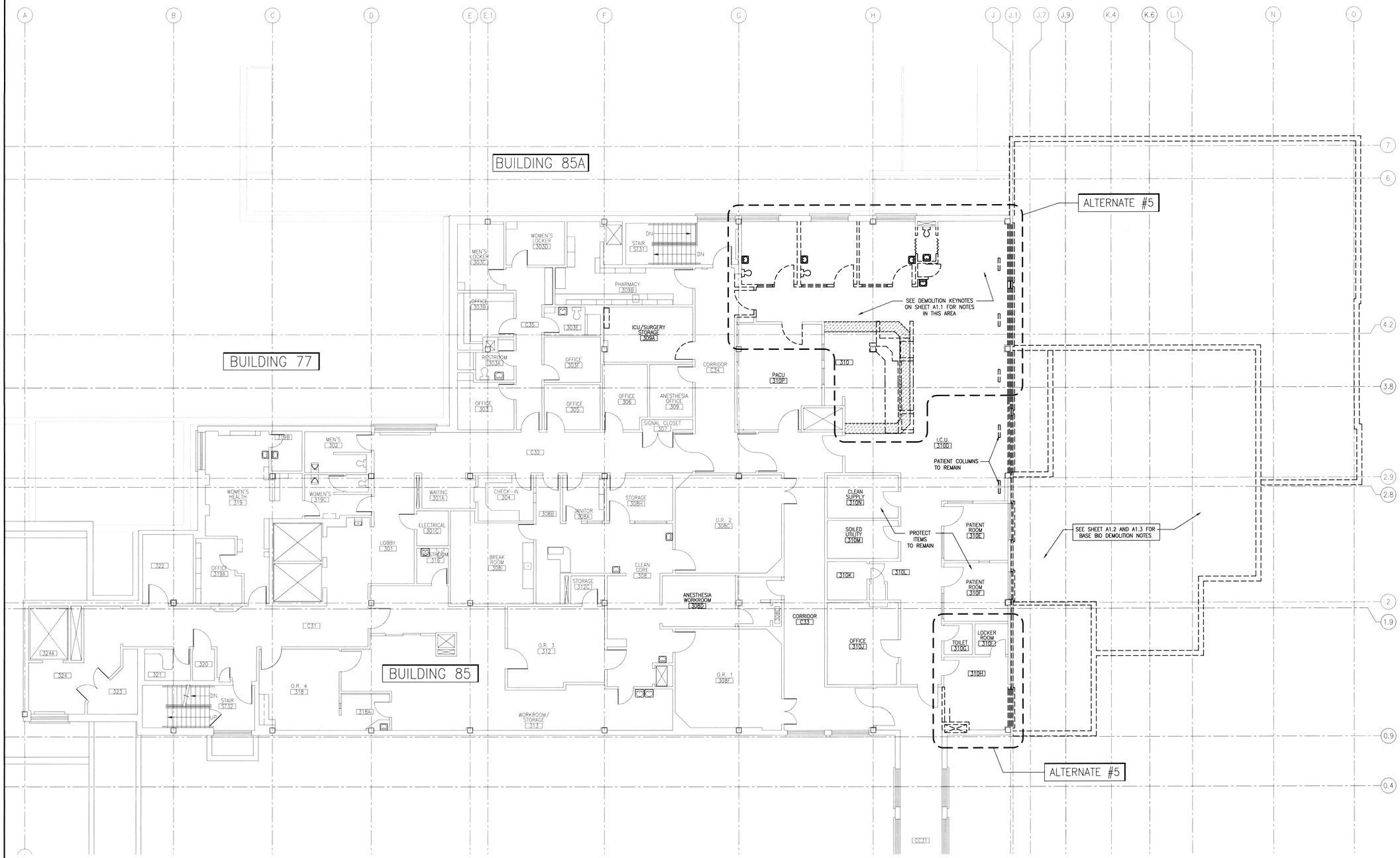

BUILDING 85 – THIRD FLOOR DEDUCT ALTERNATE DEMOLITION PLAN

SCALE: 1/8" = 1'=-0"

PLAN NORTH

ALTERNATES NARRATIVE

DEDUCT ALTERNATE #5 – SHELL O.R. SUITE

SAME AS BASE BID EXCEPT DELETE TENANT IMPROVEMENTS AS REQUIRED FOR THE 3RD FLOOR OPERATING ROOM SUITE. THIS ALTERNATE WILL INCLUDE LIMITED IMPROVEMENTS DESCRIBED ON THE DRAWINGS AND SPECIFICATIONS AND AS REQUIRED FOR REMAINING ADJACENT BASE BID IMPROVEMENTS AND AS REQUIRED TO MAINTAIN FUNCTIONALITY OF EXISTING ROOMS. OMIT BOOM EQUIPMENT SUPPORT STRUCTURES SHOWN ON SHEET S6.1. OMIT DEMOLITION OF ITEMS INDICATED ON SHEET A1.3 AND INCLUDE DEMOLITION OF ITEMS ON SHEET A10.3A WITHIN THE ALTERNATE NO. 2 WORK LIMITS INDICATED. OMIT ELECTRICAL WORK SHOWN WITHIN ALTERNATE #5 BOUNDARY ON DRAWINGS EL2.3, EP2.3, EC2.3, AND FA2.3. RETAIN AND PROTECT EXISTING ELECTRICAL WITHIN ALTERNATE #5 BOUNDARY, EXCEPT AS SHOWN ON DRAWINGS E10.3B AND E10.3C.

DEDUCT ALTERNATE #7 – SHELL P.A.C.U.

SAME AS BASE BID EXCEPT DELETE TENANT IMPROVEMENTS AS REQUIRED FOR THE 3RD FLOOR PACU #358. THIS SPACE WILL BE SHELLED WITH LIMITED IMPROVEMENTS DESCRIBED ON THE DRAWINGS AND SPECIFICATIONS AND AS REQUIRED TO CONSTRUCT WORK FOR ADJACENT BASE BID IMPROVEMENTS. OMIT WORK AT PACU #358 AS INDICATED ON DRAWINGS A2.3A, A2.3B, A2.3C AND A9.3 AND INCLUDE WORK INDICATED ON SHEETS A10.3A, A10.3B AND A10.3C WITHIN THE ALTERNATE #7 WORK LIMITS INDICATED. OMIT ELECTRICAL WORK SHOWN IN PACU #358 ON DRAWINGS EL2.3, EP2.3, AND EC2.3. FURNISH AND INSTALL ELECTRICAL IN SHELLED PACU #358 AS SHOWN ON DRAWING E10.3A.

REVISIONS	DATE

LICENSED ARCHITECT
STEVEN C. TURNER
STATE OF IDAHO

ZGA Architects and Planners, Chartered
565 W. Myrtle Street, Suite 225 Boise, Idaho 83702-7606

CAD FILE NAME: 531-317_A10.3A.dwg
XREF FILE NAME: 85A3FL_ALT.dwg, 85A3FL.dwg, 85_GRID.dwg, 531-317_xVAbord.dwg

DRAWING TITLE: THIRD FLOOR DEDUCT ALTERNATE DEMOLITION PLAN

APPROVED: CHIEF OF FACILITY MANAGEMENT SERVICE

APPROVED: MEDICAL CENTER DIRECTOR

PROJECT TITLE: REPLACE AND MODERNIZE SURGERY / INTENSIVE CARE UNIT

BUILDING NUMBER: 85 | CHECKED: ST | DRAWN: SM

LOCATION: VAMC BOISE, IDAHO

DATE: 11/01/2011

PROJECT NO.: 531-317

DRAWING NO.: A10.3A

DWG 52 OF 188

FOR CONSTRUCTION

DEPARTMENT OF VETERANS AFFAIRS

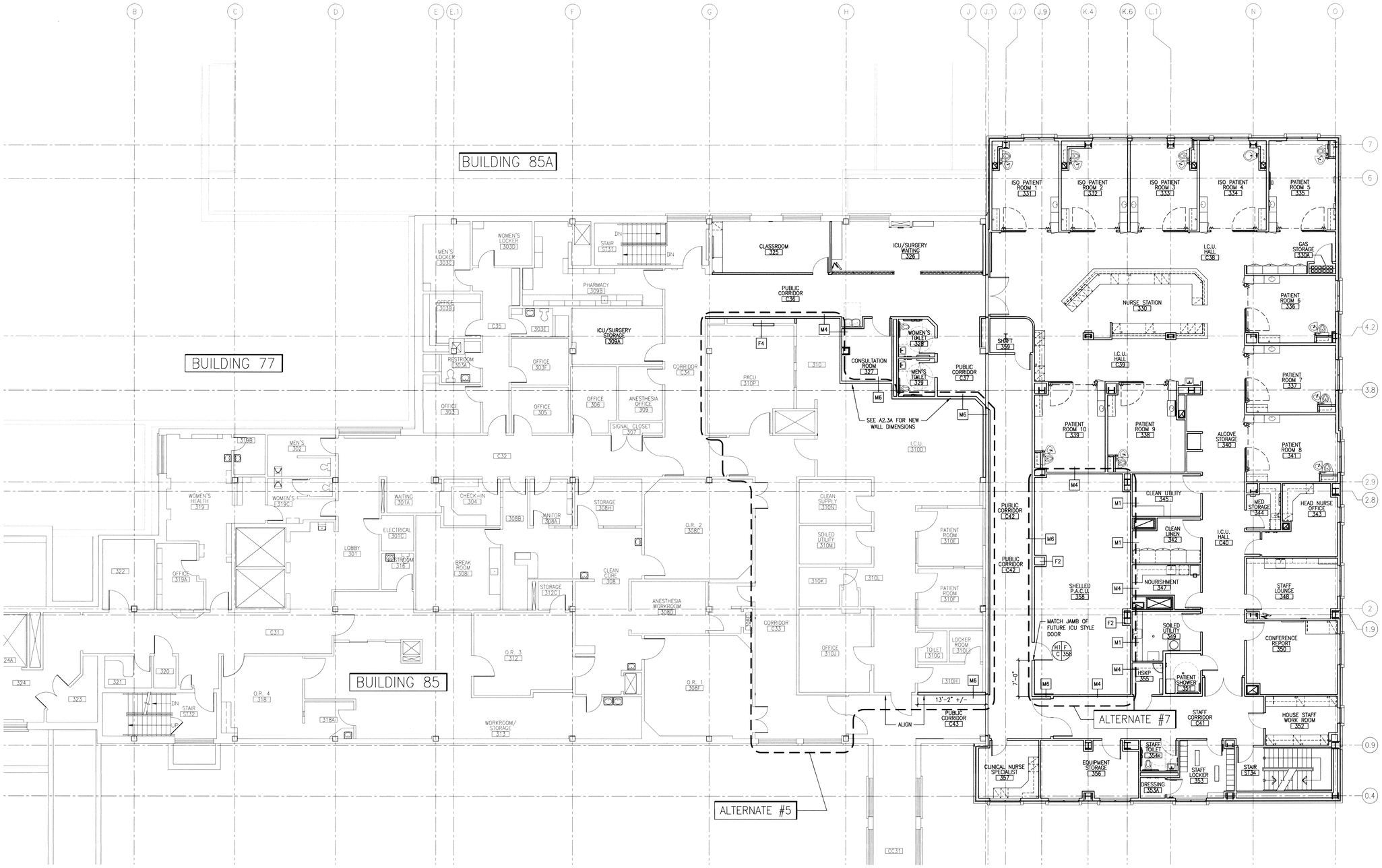

BUILDING 85 – THIRD FLOOR DEDUCT ALTERNATE FLOOR PLAN

NOT TO SCALE

PLAN NORTH

ALTERNATES NARRATIVE

DEDUCT ALTERNATE #5 – SHELL O.R. SUITE

SAME AS BASE BID EXCEPT DELETE TENANT IMPROVEMENTS AS REQUIRED FOR THE 3RD FLOOR OPERATING ROOM SUITE. THIS ALTERNATE WILL INCLUDE LIMITED IMPROVEMENTS DESCRIBED ON THE DRAWINGS AND SPECIFICATIONS AND AS REQUIRED FOR REMAINING ADJACENT BASE BID IMPROVEMENTS AND AS REQUIRED TO MAINTAIN FUNCTIONALITY OF EXISTING ROOMS. OMIT BOOM EQUIPMENT SUPPORT STRUCTURES SHOWN ON SHEET S6.1. OMIT DEMOLITION OF ITEMS INDICATED ON SHEET A1.3 AND INCLUDE DEMOLITION OF ITEMS ON SHEET A10.3A WITHIN THE ALTERNATE NO. 2 WORK LIMITS INDICATED. OMIT ELECTRICAL WORK SHOWN WITHIN ALTERNATE #5 BOUNDARY ON DRAWINGS EL2.3, EP2.3, EC2.3, AND FA2.3. RETAIN AND PROTECT EXISTING ELECTRICAL WITHIN ALTERNATE #5 BOUNDARY, EXCEPT AS SHOWN ON DRAWINGS E10.3B AND E10.3C.

DEDUCT ALTERNATE #7 – SHELL P.A.C.U.

SAME AS BASE BID EXCEPT DELETE TENANT IMPROVEMENTS AS REQUIRED FOR THE 3RD FLOOR PACU #358. THIS SPACE WILL BE SHELLED WITH LIMITED IMPROVEMENTS DESCRIBED ON THE DRAWINGS AND SPECIFICATIONS AND AS REQUIRED TO CONSTRUCT WORK FOR ADJACENT BASE BID IMPROVEMENTS. OMIT WORK AT PACU #358 AS INDICATED ON DRAWINGS A2.3A, A2.3B, A2.3C AND A9.3 AND INCLUDE WORK INDICATED ON SHEETS A10.3A, A10.3B AND A10.3C WITHIN THE ALTERNATE #7 WORK LIMITS INDICATED. OMIT ELECTRICAL WORK SHOWN IN PACU #358 ON DRAWINGS EL2.3, EP2.3, AND EC2.3. FURNISH AND INSTALL ELECTRICAL IN SHELLED PACU #358 AS SHOWN ON DRAWING E10.3A.

REVISIONS	DATE

Architects and Planners, Chartered
565 W. Myrtle Street, Suite 225 Boise, Idaho 83702-7606

CAD FILE NAME: 531-317_A10.3B.dwg
XREF FILE NAME: 85A3FL_ALT.dwg, 85A3FL.dwg, 85_GRID.dwg, 531-317_xVAbord.dwg

DRAWING TITLE: THIRD FLOOR DEDUCT ALTERNATE FLOOR PLAN

APPROVED: CHIEF OF FACILITY MANAGEMENT SERVICE

APPROVED: MEDICAL CENTER DIRECTOR

PROJECT TITLE: REPLACE AND MODERNIZE SURGERY / INTENSIVE CARE UNIT

BUILDING NUMBER: 85 | CHECKED: ST | DRAWN: SM

LOCATION: VAMC BOISE, IDAHO

DATE: 11/01/2011
PROJECT NO. 531-317
DRAWING NO. A10.3B
DWG 53 OF 188

FOR CONSTRUCTION

DEPARTMENT OF VETERANS AFFAIRS

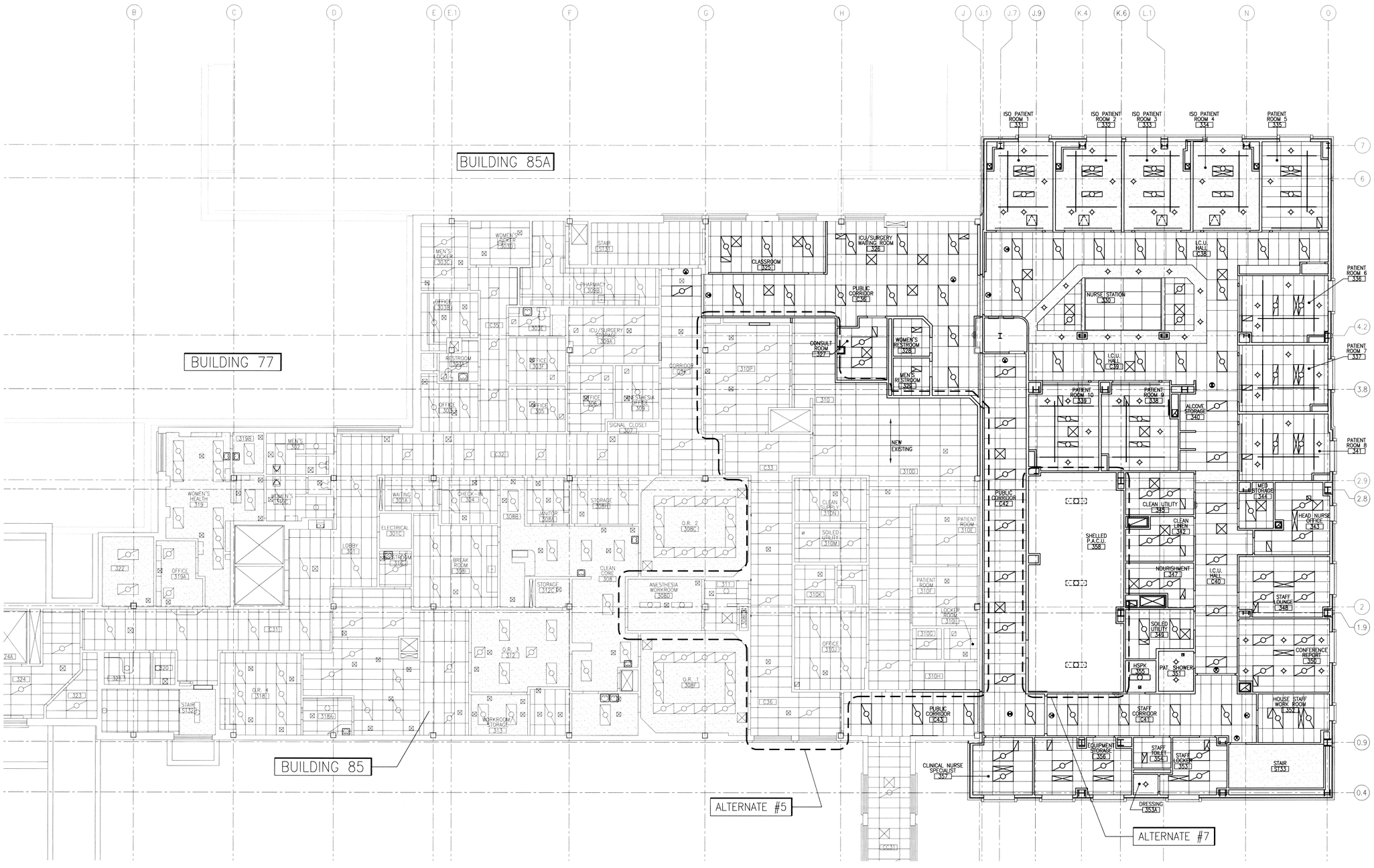

BUILDING 85 – THIRD FLOOR DEDUCT ALTERNATE REFLECTED CEILING PLAN

NOT TO SCALE

PLAN NORTH

ALTERNATES NARRATIVE

DEDUCT ALTERNATE #5 – SHELL O.R. SUITE

SAME AS BASE BID EXCEPT DELETE TENANT IMPROVEMENTS AS REQUIRED FOR THE 3RD FLOOR OPERATING ROOM SUITE. THIS ALTERNATE WILL INCLUDE LIMITED IMPROVEMENTS DESCRIBED ON THE DRAWINGS AND SPECIFICATIONS AND AS REQUIRED FOR REMAINING ADJACENT BASE BID IMPROVEMENTS AND AS REQUIRED TO MAINTAIN FUNCTIONALITY OF EXISTING ROOMS. OMIT BOOM EQUIPMENT SUPPORT STRUCTURES SHOWN ON SHEET S6.1. OMIT DEMOLITION OF ITEMS INDICATED ON SHEET A1.3 AND INCLUDE DEMOLITION OF ITEMS ON SHEET A10.3A WITHIN THE ALTERNATE NO. 2 WORK LIMITS INDICATED. OMIT ELECTRICAL WORK SHOWN WITHIN ALTERNATE #5 BOUNDARY ON DRAWINGS EL2.3, EP2.3, EC2.3, AND FA2.3. RETAIN AND PROTECT EXISTING ELECTRICAL WITHIN ALTERNATE #5 BOUNDARY, EXCEPT AS SHOWN ON DRAWINGS E10.3B AND E10.3C.

DEDUCT ALTERNATE #7 – SHELL P.A.C.U.

SAME AS BASE BID EXCEPT DELETE TENANT IMPROVEMENTS AS REQUIRED FOR THE 3RD FLOOR PACU #358. THIS SPACE WILL BE SHELLED WITH LIMITED IMPROVEMENTS DESCRIBED ON THE DRAWINGS AND SPECIFICATIONS AND AS REQUIRED TO CONSTRUCT WORK FOR ADJACENT BASE BID IMPROVEMENTS. OMIT WORK AT PACU #358 AS INDICATED ON DRAWINGS A2.3A, A2.3B, A2.3C AND A9.3 AND INCLUDE WORK INDICATED ON SHEETS A10.3A, A10.3B AND A10.3C WITHIN THE ALTERNATE #7 WORK LIMITS INDICATED. OMIT ELECTRICAL WORK SHOWN IN PACU #358 ON DRAWINGS EL2.3, EP2.3, AND EC2.3. FURNISH AND INSTALL ELECTRICAL IN SHELLED PACU #358 AS SHOWN ON DRAWING E10.3A.

REFLECTED CEILING PLAN LEGEND

	1' x 4' PENDANT LUMINAIRE
	2' x 2' RECESSED LUMINAIRE
	1' x 4' RECESSED LUMINAIRE
	2' x 4' RECESSED LUMINAIRE
	DECORATIVE PENDANT
	RECESSED CAN LUMINAIRE
	CEILING MOUNTED EXIT LIGHT
	1' X 2' RETURN AIR GRILLE
	2' X 2' RETURN AIR GRILLE
	1' X 2' DIFFUSER
	2' X 2' DIFFUSER
	1' X 4' DIFFUSER
	1' X 2' EXHAUST
	2' X 2' EXHAUST
	10" X 10" EXHAUST
	ACCESS DOOR/PANEL
+8'-0"	ELEVATION A.F.F.

REVISIONS	DATE

LICENSED ARCHITECT — STATE OF IDAHO — STEVEN E. TURNER — NOV. 1, 2011

ZGA. Architects and Planners, Chartered
565 W. Myrtle Street, Suite 225 Boise, Idaho 83702-7606

CAD FILE NAME: 531-317_A10.3C.dwg
XREF FILE NAME: 85A3FL_ALT.dwg, 85A3FL.dwg, 85_GRID.dwg, 531-317_xVAbord.dwg

DRAWING TITLE: THIRD FLOOR DEDUCT ALTERNATE REFLECTED CEILING PLAN

APPROVED: CHIEF OF FACILITY MANAGEMENT SERVICE

APPROVED: MEDICAL CENTER DIRECTOR

PROJECT TITLE: REPLACE AND MODERNIZE SURGERY / INTENSIVE CARE UNIT

BUILDING NUMBER: 85 | CHECKED: ST | DRAWN: SM

LOCATION: VAMC BOISE, IDAHO

DATE: 11/01/2011

PROJECT NO.: 531-317

DRAWING NO.: A10.3C

DWG 54 OF 188

FOR CONSTRUCTION

DEPARTMENT OF VETERANS AFFAIRS

GENERAL STRUCTURAL NOTES

A. GENERAL

1. CODE: INTERNATIONAL BUILDING CODE, 2009 EDITION, AS MODIFIED BY VETERAN'S ADMINISTRATION HANDBOOK H-18-8 (SEISMIC DESIGN REQUIREMENTS)

2. DESIGN ROOF LIVE LOADS (UON):

LOCATION	UNIFORM LOAD
ROOF AREAS (UNO)	25 PSF
DESIGNATED MECH EQPT AREAS	125 PSF

3. DESIGN FLOOR LIVE LOADS (UON):

LOCATION	UNIFORM LOAD
ELEVATED FLOORS (UNO)	80 PSF (REDUCIBLE)
STAIRS	100 PSF
MECH PENTHOUSE FLOOR	125 PSF

4. SUPERIMPOSED DEAD LOADS

LOCATION	UNIFORM LOAD
ELEVATED FLOORS (UNO)	30 PSF (INCLUDES 20 PSF PARTITION LOAD)
EQPT HOUSEKEEPING PADS	50 PSF
ROOF OVER MECHANICAL PENTHOUSE:	20 PSF

5. SNOW LOADS
   A. GROUND SNOW LOAD Pg = 20 PSF
   B. SNOW EXPOSURE FACTOR Ce = 1.0
   C. SNOW LOAD IMPORTANCE FACTOR Is = 1.2
   D. THERMAL FACTOR Ct = 1.0
   E. FLAT ROOF SNOW LOAD Pf = 0.7*Ce*Ct*Is*Pg = 17 PSF (PLUS DRIFTING)
   F. MINIMUM UNIFORM ROOF SNOW LOAD = 25 PSF

6. WIND:
   A. DESIGN SPEED: 90 MPH (3-SEC GUST)
   B. EXPOSURE: "C"
   C. IMPORTANCE FACTOR: I W = 1.15
   D. STRUCTURE TYPE: "ENCLOSED"
   E. INTERNAL PRESSURE COEFFICIENT: GCpi = 0.18
   F. COMPONENTS AND CLADDING
   i) WALLS: 45 PSF
   ii) PARAPETS: 65 PSF
   iii) ROOF UPLIFT: SEE DIAGRAM ON DRAWING S0.2

7. SEISMIC:

Ie	1.5
Ss	0.311
S1	0.106
SITE CLASS	E
SDS	0.478
SD1	0.245
SEISMIC DESIGN CATEGORY	D
BASIC SFRS (ASCE 7 TABLE 12.2-1)	SPECIAL STEEL MOMENT FRAME
ANALYSIS PROCEDURE	MODAL RESPONSE SPECTRUM ANALYSIS
RESPONSE MODIFICATION COEFFICIENT "R"	8.0
SEISMIC RESPONSE COEFFICIENT "Cs" (FACTORED)	N/S: 0.042 E/W: 0.055
DESIGN BASE SHEAR V=Cs*W	N/S: 115 KIPS E/W: 151 KIPS

8. DATUM: FLOOR TOC SLAB EL 100'-0" = EL 2734.72 FEET, SEE CIVIL DWGS.

9. CONTRACTOR SHALL COORDINATE ALL DIMENSIONS AND ELEVATIONS SHOWN ON STRUCTURAL DRAWINGS WITH ARCHITECTURAL DRAWINGS.

10. CONTRACTOR SHALL BRING ALL OMISSIONS OR CONFLICTS BETWEEN THE VARIOUS ELEMENTS OF THE CONTRACT DOCUMENTS TO THE IMMEDIATE ATTENTION OF THE CONTRACTING OFFICER PRIOR TO PROCEEDING WITH RELATED WORK.

11. WORK PERFORMED IN OCCUPIED PORTIONS OF THE BUILDING TO BE SCHEDULED AND COORDINATED WITH VA CONTRACTING OFFICER. IT SHALL BE ASSUMED THAT THIS WORK IS TO BE PERFORMED DURING NON-PEAK TIMES BETWEEN THE HOURS OF 6PM AND 7AM UNLESS OTHERWISE APPROVED BY THE VA CONTRACTING OFFICER.

12. STRUCTURAL MEMBERS OR COMPONENTS SHALL NOT BE CUT (FOR PIPES, DUCTS, ETC.), UNLESS SPECIFICALLY DETAILED OR APPROVED IN WRITING BY THE CONTRACTING OFFICER.

13. THESE PLANS DO NOT INCLUDE NECESSARY COMPONENTS FOR SAFETY OF THE BUILDING OR EQUIPMENT DURING CONSTRUCTION. CONTRACTOR SHALL BE RESPONSIBLE FOR ALL WORK RELATING TO CONSTRUCTION, ERECTION METHODS, BRACING, SHORING, RIGGING, GUYS, SCAFFOLDING, FORMWORK, AND OTHER WORK REQUIRED TO SAFELY PERFORM THE WORK.

14. STANDARD DETAILS AS SHOWN ON THE DRAWINGS ARE INTENDED TO BE TYPICAL AND SHALL APPLY TO ALL SIMILAR SITUATIONS OCCURRING ON THE PROJECT, WHETHER OR NOT THEY ARE KEYED IN EACH LOCATION.

15. VISITS TO THE JOB SITE BY THE CONTRACTING OFFICER'S REPRESENTATIVES TO OBSERVE CONSTRUCTION SHALL NOT IN ANY WAY MEAN THEY ARE GUARANTORS OF THE CONTRACTOR'S WORK, NOR RESPONSIBLE FOR COMPREHENSIVE OR SPECIAL INSPECTIONS, COORDINATION, SUPERVISION, NOR SAFETY AT THE JOB SITE.

16. VERIFY LOCATION AND SIZE OF ALL OPENINGS THROUGH FLOORS, WALLS, SLABS, AND ROOFS WITH MECHANICAL, ELECTRICAL, AND ARCHITECTURAL DRAWINGS AND WITH EQUIPMENT FURNISHED PRIOR TO PROCEEDING WITH RELATED WORK.

17. DETAILING AND DIMENSIONS OF EXISTING STRUCTURES SHOWN ARE BASED ON AS-BUILT DESIGN DRAWINGS, AND DO NOT NECESSARILY REPRESENT THE AS-CONSTRUCTED CONDITIONS. THE CONTRACTOR SHALL FIELD VERIFY DIMENSIONS AND DETAILING OF THE EXISTING STRUCTURES PRIOR TO FABRICATION OF ADJACENT FRAMING OR CONNECTIONS OR SUPPORTS THAT ARE AFFECTED BY THE EXISTING STRUCTURE.

B. FOUNDATIONS / SLAB ON GRADE

1. FOUNDATION RECOMMENDATION LETTER DATED MAY 17, 2011 AND PREPARED BY MATERIALS TESTING & INSPECTION (MTI)

2. CONTRACTOR SHALL IMMEDIATELY REPORT ANY UNUSUAL SOIL CONDITIONS (WATER, SOFT LAYERS, ETC.) ENCOUNTERED DURING EXCAVATION FOR FOOTINGS TO THE CONTRACTING OFFICER.

3. CONTRACTOR IS RESPONSIBLE FOR DETERMINING THE SLOPE OF ALL EXCAVATIONS BASED ON THE TYPE AND CONDITION OF MATERIAL ENCOUNTERED AND FOR CONFORMING TO ALL LOCAL, STATE, AND FEDERAL REGULATIONS.

4. ALL COLUMNS SHALL BEAR ON CONCRETE GRADE BEAMS OR PILE CAPS THAT SHALL BE SUPPORTED BY PILES AS INDICATED ON THE DRAWINGS.

5. CONTRACTOR SHALL NOTIFY CONTRACTING OFFICER FOR GEOTECHNICAL REVIEW AND APPROVAL OF FOUNDATION BEARING SURFACE AND SUBGRADE 48-HOURS IN ADVANCE OF FORMING, PLACING REINFORCEMENT, OR PLACING COMPACTED BACKFILL.

6. DESIGN OF FOUNDATION SYSTEMS ARE BASED ON THE FOLLOWING ALLOWABLE (SERVICE LEVEL) PILE LOADS.

   ALLOWABLE AXIAL LOAD – 90 KIPS (PER PILE)
   ALLOWABLE LATERAL LOAD – 15.3 KIPS (PER PILE)

7. CONTRACTOR IS RESPONSIBLE FOR PROTECTING EXISTING FOOTINGS, FOUNDATIONS AND WALLS DESIGNATED TO REMAIN.

8. ALL CONCRETE SLABS ON GRADE LOCATED WITHIN THE BUILDING PERIMETER SHALL BEAR DIRECTLY ON A VAPOR BARRIER OVER 4-INCH MIN COMPACTED 3/4-INCH MINUS LEVELING COURSE OVER COMPACTED BACKFILL.

9. BACKFILL AGAINST CONCRETE BASEMENT WALLS AND RETAINING WALLS SHALL NOT BE PERMITTED UNTIL CONCRETE HAS OBTAINED SPECIFIED 28-DAY COMPRESSIVE STRENGTH UNLESS OTHERWISE APPROVED IN WRITING BY THE STRUCTURAL ENGINEER. BACKFILL MATERIAL PLACED WITHIN 3 FEET OF THE WALL SHALL BE IMPORTED, WELL-GRADED MATERIAL CONFORMING TO THE GEOTECHNICAL RECOMMENDATIONS. CONTRACTOR SHALL PLACE BACKFILL UNIFORMLY AROUND STRUCTURE TO MINIMIZE BUILDUP OF DIFFERENTIAL LATERAL EARTH PRESSURES.

C. CONCRETE

1. MINIMUM 28-DAY COMPRESSIVE STRENGTH SHALL BE AS FOLLOWS.
   A. SLABS ON GRADE AND ALL CONCRETE NOT OTHERWISE LISTED: 3000 PSI (NORMAL WEIGHT)
   B. GRADE BEAMS, PILE CAPS: 5000 PSI (NORMAL WEIGHT)
   C. CONCRETE FILL OVER METAL DECK: 4000 PSI (LIGHT WEIGHT)

2. ONLY ONE CLASS OF CONCRETE SHALL BE PLACED ON THE JOB AT ONE TIME.

3. REINFORCING STEEL FOR CONCRETE

   A. EXCEPT WHERE OTHERWISE NOTED, ASTM A615 GRADE 60 (ASTM A615M, GRADE 420) OR ASTM A706, GRADE 60 (A706M, GRADE 420)
   B. WHERE INDICATED ON DRAWINGS, ASTM A706, GRADE 60.
   C. FURNISH AND ERECT IN ACCORDANCE WITH CURRENT EDITION OF CRSI "MANUAL OF STANDARD PRACTICE" AND "PLACING REINFORCING BARS" BASED ON THE CURRENT ACI 318 BLDG CODE.
   D. REINFORCING STEEL SIZES ARE SHOWN ON THE DRAWINGS IN ENGLISH UNITS. CORRESPONDING METRIC SIZES ARE LISTED IN THE FOLLOWING TABLE.

BAR SIZE									
ENGLISH	# 3	# 4	# 5	# 6	# 7	# 8	# 9	# 10	# 11
METRIC	10	13	16	19	22	25	29	32	36

4. ALL STEEL REINFORCING SPLICES AND LAP LENGTHS SHALL CONFORM TO THE FOLLOWING MINIMUM REQUIREMENTS UNLESS NOTED OR DETAILED OTHERWISE.

BAR SIZE	ENGLISH	# 3	# 4	# 5	# 6	# 7	# 8	# 9	# 10	# 11
	METRIC	10	13	16	19	22	25	29	32	36
LAP SPLICE LENGTH										
SPACING<6"	TOP BAR *	1'-4"	2'-0"	3'-0"	4'-0"	5'-10"	6'-8"	7'-6"	8'-4"	9'-2"
	OTHER BAR	1'-4"	1'-7"	2'-3"	3'-1"	4'-6"	5'-2"	5'-10"	6'-5"	7'-1"
SPACING>6"	TOP BAR *	1'-4"	1'-7"	2'-0"	2'-5"	3'-6"	4'-0"	5'-0"	6'-0"	7'-1"
	OTHER BAR	1'-4"	1'-4"	1'-7"	1'-10"	2'-9"	3'-1"	3'-10"	4'-7"	5'-5"
EMBEDMENT LENGTH										
SPACING<6"	TOP BAR *	1'-0"	1'-7"	2'-3"	3'-1"	4'-6"	5'-2"	5'-10"	6'-5"	7'-1"
	OTHER BAR	1'-0"	1'-2"	1'-9"	2'-5"	3'-6"	4'-0"	4'-6"	5'-0"	5'-5"
SPACING>6"	TOP BAR *	1'-0"	1'-3"	1'-7"	1'-10"	2'-9"	3'-1"	3'-10"	4'-7"	5'-5"
	OTHER BAR	1'-0"	1'-0"	1'-2"	1'-5"	2'-1"	2'-5"	2'-11"	3'-7"	4'-2"

   [*] NOTE: TOP BARS SHALL BE DEFINED AS ANY HORIZONTAL BAR PLACED SUCH THAT MORE THAN 12" OF FRESH CONCRETE IS CAST IN THE MEMBER BELOW THE BAR IN ANY SINGLE PLACEMENT; HORIZONTAL WALL BARS SHALL BE CONSIDERED TOP BARS.

   LAP SPLICE AND EMBEDMENT LENGTHS SHOWN ARE FOR USE IN 4000 PSI CONCRETE. INCREASE LENGTHS 30% FOR USE IN 3000 PSI CONCRETE.

5. CONCRETE SLABS ON GRADE SHALL BE REINFORCED WITH NOVOMESH 850 AS MANUFACTURED BY PROPEX CONCRETE SYSTEMS CORP, CHATTANOOGA, TN OR APPROVED EQUAL. DOSAGE RATE: 30 POUNDS MINIMUM PER CUBIC YARD. (TYPICAL UNLESS OTHERWISE NOTED).

6. LIGHTWEIGHT CONCRETE FILL OVER METAL DECK SHALL BE REINFORCED WITH FIBERMESH 300 POLY FIBERS AS MANUFACTURED BY PROPEX CONCRETE SYSTEMS CORP., CHATTANOOGA, TN OR APPROVED EQUAL. DOSAGE RATE: 2.0 POUNDS MINIMUM PER CUBIC YARD.

7. ALL GRADE BEAM REINFORCING BARS SHALL BE CONTINUOUS AROUND CORNERS AND THROUGH PILE CAPS.

8. SEE CIVIL PLANS FOR ALL SIDEWALK AND SITE PAVING.

9. FIELD BENDING: ALL BENDS SHALL BE STANDARD 90-DEGREE HOOK AS DEFINED IN CURRENT ACI 318 UNLESS NOTED OR DETAILED OTHERWISE. REINFORCING STEEL SHALL NOT BE BENT OR STRAIGHTENED IN A MANNER INJURIOUS TO THE CONCRETE OR STEEL.

C. CONCRETE (CONTINUED)

10. REINFORCING STEEL FOR FOOTINGS AND SLABS ON GRADE SHALL BE ADEQUATELY SUPPORTED ON PRECAST CONCRETE UNITS TO KEEP REINFORCING ABOVE THE GRADE. LIFTING REINFORCING OFF GRADE DURING PLACEMENT SHALL NOT BE PERMITTED.

11. REMOVAL OF FORMS AND SHORES SHALL BE IN ACCORDANCE WITH CURRENT EDITION OF ACI 318, CHAPTER 6.

12. MINIMUM CLEARANCE FOR REINFORCEMENT BARS SHALL BE AS FOLLOWS (UNLESS OTHERWISE NOTED):
    A. 3" FOR CONCRETE CAST AGAINST AND PERMANENTLY EXPOSED TO EARTH
    B. 2" FOR CONCRETE EXPOSED TO EARTH OR WEATHER.
    C. ¾" FOR CONCRETE SLABS AND WALLS NOT EXPOSED TO WEATHER
    D. 1 ½" FOR PRIMARY REINF IN CONCRETE BEAMS, COLUMNS, AND PILASTERS NOT EXPOSED TO WEATHER

13. BONDING OF NEW CONCRETE TO NEW OR EXISTING CONCRETE: AS SPECIFIED.

14. CONTRACTOR SHALL COORDINATE PLACEMENT OF ALL OPENINGS, CURBS, DOWELS, SLEEVES, CONDUITS, BOLTS, AND EMBEDS REQUIRED WITH MECHANICAL, ELECTRICAL, AND EQUIPMENT MANUFACTURER'S PRIOR TO PLACEMENT.

15. NO ALUMINUM CONDUIT OR PRODUCTS CONTAINING ALUMINUM OR ANY OTHER MATERIAL INJURIOUS TO THE CONCRETE SHALL BE EMBEDDED IN CONCRETE.

16. CURING: AS SPECIFIED.

17. CONTRACTOR SHALL BE RESPONSIBLE TO PROVIDE 48-HOUR (MINIMUM) NOTICE TO CONTRACTING OFFICER PRIOR TO PLACING CONCRETE TO ALLOW FOR PROPER OBSERVATION AND INSPECTION OF REINFORCING STEEL PLACEMENT.

18. ALL CONCRETE TESTS INCLUDING AIR CONTENT, SLUMP, AND TEST CYLINDERS SHALL BE TAKEN AT THE POINT OF DISCHARGE AND FROM THE DISCHARGE END OF PUMP HOSE WHEN CONCRETE IS PUMPED.

19. ALL EXPOSED CONCRETE EDGES SHALL BE CHAMFERED UNLESS OTHERWISE NOTED ON ARCHITECTURAL DRAWINGS.

D. STRUCTURAL STEEL

1. STRUCTURAL STEEL MATERIALS:
   A. EXCEPT WHERE OTHERWISE NOTED: ASTM A36
   B. STEEL PIPE: ASTM A501 OR A53 GRADE B
   C. HSS STEEL SECTIONS (RECTANGULAR AND CIRCULAR): ASTM A500 GRADE B
   D. STEEL WF BEAMS AND COLUMNS: ASTM A992.
   E. STIFFENER PLATES AT BEAM TO COLUMN MOMENT CONNECTIONS: ASTM A572 (GRADE 50)
   F. BASE PLATES, DOUBLER PLATES, AND CONTINUITY PLATES ASSOCIATED WITH SPECIAL MOMENT FRAMES:
      ASTM A572 (GRADE 50).:

2. STRUCTURAL STEEL SHALL BE FABRICATED AND ERECTED IN CONFORMANCE WITH THE LATEST EDITION OF THE AISC MANUAL OF STEEL CONSTRUCTION.

3. BOLTS

   A. EXCEPT WHERE OTHERWISE NOTED: ASTM A325-N (BEARING TYPE) HIGH STRENGTH BOLTS
   B. ASTM F1852 TWIST-OFF TYPE TENSION CONTROL BOLTS FOR USE IN PRE-TENSIONED OR SLIP-CRITICAL JOINTS.
   C. BOLTS INDICATED AS MACHINE BOLTS (MB): ASTM A307

4. ANCHOR RODS:

   A. EXCEPT WHERE OTHERWISE NOTED: ASTM F1554, GRADE 36
   B. AT MOMENT FRAME BASE PLATES: ASTM A449, GRADE 105

5. CONTRACTOR SHALL PROVIDE TEMPORARY BRACING AS REQUIRED TO MAINTAIN PLUMBNESS AND STABILITY DURING ERECTION.

6. ALL ANCHORS WELDED TO STEEL PLATES OR ANGLES THAT ARE EMBEDDED IN MASONRY OR CONCRETE SHALL BE DEFORMED BAR ANCHORS (DBA) IN CONFORMANCE WITH ASTM A496 OR HEADED ANCHOR STUDS (HAS) WELDED TO PLATE OR ANGLE.

7. COMPOSITE STRUCTURAL STEEL BEAMS HAVE BEEN DESIGNED FOR AN "UNSHORED CONDITION" DURING CONSTRUCTION. HOWEVER, IT IS NOTED THAT STEEL BEAMS WILL DEFLECT UNDER WET CONCRETE LOADS AND RELATED DEFLECTION WILL RESULT IN MORE CONCRETE REQUIRED THAN THAT BASED ON UNDEFLECTED GEOMETRY FROM PLANS. CONTRACTOR SHALL HAVE, AT NO ADDITIONAL COST TO THE GOVERNMENT, THE FOLLOWING OPTIONS:

   A. PROVIDE ADDITIONAL CONCRETE AS REQUIRED
   B. PROVIDE BEAM CAMBER AS REQUIRED TO BALANCE DEFLECTION DUE TO WET CONCRETE

E. STRUCTURAL WELDING

1. ALL WELDS SHALL BE PERFORMED BY CERTIFIED WELDERS AND SHALL CONFORM TO AWS D1.1. ALL WELDS SHALL BE PERFORMED WITH E70XX ELECTRODES OR EQUAL. ALL SQUARE AND BEVELED GROOVED WELDS SHALL BE COMPLETE PENETRATION WELDS (CJP) UNLESS OTHERWISE NOTED.

2. WELDING PROCEDURE QUALIFICATIONS AND WELDER QUALIFICATIONS SHALL BE SUBMITTED FOR REVIEW AND APPROVAL BY THE ENGINEER PRIOR TO STARTING THE WORK.

3. FOR WELD INSPECTION REQUIREMENTS, SEE SPECIFICATION SECTION 05 12 00.

4. NON-DESTRUCTIVE TESTING OF WELDS SHALL BE PERFORMED IN ACCORDANCE WITH AWS D1.1 EXCEPT SECTION 6.6.5 SHALL BE REPLACED WITH THE FOLLOWING AT NO ADDITIONAL COST TO THE GOVERNMENT:

   "THE GOVERNMENT RESERVES THE RIGHT TO USE ANY NON-DESTRUCTIVE WELD TESTING METHOD, INCLUDING RADIOGRAPHIC TESTING, TO VERIFY THE SOUNDNESS AND QUALITY OF WELDS. IN ADDITION, FREQUENCY OF WELD TESTING MAY BE INCREASED AT THE CONTRACTING OFFICER'S DISCRETION WHERE POOR WELDING WORKMANSHIP IS ENCOUNTERED."

   ALL WELDS FOUND DEFECTIVE SHALL BE REPAIRED AND/OR REPLACED AND RETESTED FOR ADEQUACY AT THE CONTRACTOR'S SOLE EXPENSE.

5. CONTRACTOR SHALL UTILIZE NECESSARY WELD PROVISIONS AS REQUIRED TO PREVENT DAMAGE TO CONCRETE FROM FIELD WELD OPERATIONS INVOLVING EMBEDDED PLATES, ANGLES, AND OTHER MEMBERS.

F. METAL DECK

1. METAL DECK SHALL CONFORM TO REQUIREMENTS OF THE STEEL DECK INSTITUTE (SDI).

2. METAL DECK WELDING SHALL BE PERFORMED BY CERTIFIED WELDERS IN ACCORDANCE WITH AWS D1.3.

3. CONTRACTOR SHALL NOTIFY INDEPENDENT TESTING AGENCY AND CONTRACTING OFFICER 48-HOURS IN ADVANCE PRIOR TO APPLICATION OF CONCRETE TOPPING AND ROOFING MATERIAL IN ORDER TO PERMIT PROPER INSPECTION OF METAL DECK ATTACHMENTS.

4. ALL FIELD WELD MODIFICATIONS SHALL BE REVIEWED AND APPROVED BY THE CONTRACTING OFFICER PRIOR TO COMMENCEMENT OF THE WORK.

G. STRUCTURAL METAL STUD FRAMING

1. STRUCTURAL METAL STUD FRAMING SHALL BE USED AT ALL EXTERIOR WALL SYSTEMS, ALL WALL SYSTEMS SUPPORTING MASONRY VENEER, AND WHERE NOTED ON THE DRAWINGS.FOR ADDITIONAL REQUIREMENTS, SEE SPECIFICATION SECTION 05 40 00.

2. BRIDGING SHALL BE INSTALLED AT 4'-0" MAXIMUM SPACING AND SHALL CONSIST OF ONE OF THE FOLLOWING:

   A) SIMPSON LTB20 X-BRIDGING (OR APPROVED EQUAL) WITH (2) #10 SELF TAPPING SCREWS EACH END EACH STUD

   B) 1 1/2 " x 16 GA CRC CHANNEL x CONTINUOUS THROUGH STUD WEB PUNCHOUTS W/ SIMPSON A34 FRAMING CLIP EA STUD

   C) NOMINAL 7" x 16 GA x 16" HORIZONTAL BLOCKING BETWEEN STUDS AT 8'-0" MAXIMUM SPACING HORIZONTAL AND AT END OF EACH WALL PANEL SECTION ADJACENT TO DOOR, WINDOW, CORNER, OR OTHER DISCONTINUITY; TIE BLOCKING TO WALL STUDS USING SIMPSON CS22 x CONTINUOUS EACH SIDE OF WALL. ANCHOR CS22 TO EACH STUD USING (1) #10 STS EACH STUD AND TO EACH HORIZONTAL BLOCKING USING (1) #10 STS AT 1-INCH MAXIMUM SPACING.

3. ANCHOR BETWEEN TRACK AND STRUCTURAL STEEL SHALL BE HILTI 0.145" DIA DX-X-EDNI NAIL OR APPROVED EQUAL.

4. ALL ANCHORS AT EXTERIOR WALLS SHALL BE ZINC COATED IN ACCORDANCE WITH ASTM B633 TYPE III, SC1.

5. WALL FINISH AND VENEER (CMU BLOCK, BRICK, OR EIFS) NOT SHOWN ON STRUCTURAL DRAWINGS, SEE ARCHITECTURAL.

6. NOT USED

7. PROVIDE MINIMUM OF DOUBLE VERTICAL STUDS AT ALL WALL CORNERS. SEE TYPICAL OPENING DETAIL FOR JAMBS AT OPENINGS.

8. NOMENCLATURE:

   EXAMPLE:
   800 S 162 – 54
   - 54: MINIMUM THICKNESS IN MILS (EX: 54 MILS = 16 GAGE, 33 MILS = 20 GAGE)
   - 162: FLANGE WIDTH TO TWO DECIMAL PLACES WITHOUT USE OF DECIMALS (EX: 162 = 1-5/8", 150 = 1-1/2", 125 = 1-1/4")
   - S: METAL STUD TYPE (EX: S = STUD, T = TRACK)
   - 800: WEB DEPTH TO TWO DECIMAL PLACES (EX: 800 = 8-INCHES, 362 = 3-5/8 INCHES)

9. UNLESS OTHERWISE NOTED, WHERE STS (SELF-TAPPING SCREWS) ARE INDICATED ON PLANS, SECTIONS, OR DETAILS, USE SCREWS WITH THE FOLLOWING PROPERTIES (IF SIZE NOT SHOWN, USE #12):

	LIGHT GAGE TO STRUCTURAL STEEL (>1/8")		LIGHT GAGE TO LIGHT GAGE	
SCREW DESIGNATION	LENGTH	POINT	LENGTH	POINT
#12	1 1/4"	#5	3/4"	#3
#10	1"	#4	3/4"	#3

10. UNLESS OTHERWISE NOTED, WHERE PAF (POWDERED ACTUATED FASTENERS) ARE INDICATED ON PLANS, SECTIONS, OR DETAILS, USE HILTI 0.145" DIA DX-X-EDNI NAIL, OR APPROVED EQUAL.

H. METAL STRUT FRAMING SYSTEM

1. ALL METAL STRUT AND COMPONENTS SHALL BE MANUFACTURED BY UNISTRUT CORPORATION OR APPROVED EQUAL AS DETERMINED BY THE CONTRACTING OFFICER.

2. EACH INDIVIDUAL METAL STRUT ASSEMBLY SHALL HAVE ALL COMPONENTS (I.E. STRUTS, FITTINGS, CONNECTORS, ETC.) PROVIDED BY A SINGLE MANUFACTURER. MIXING COMPONENTS FROM DIFFERENT MANUFACTURERS IS STRICTLY PROHIBITED.

3. ALL BOLTED CONNECTIONS SHALL BE TIGHTENED IN STRICT ACCORDANCE WITH THE METAL STRUT MANUFACTURER'S REQUIREMENTS.

4. SEE SPECIFICATIONS FOR ADDITIONAL REQUIREMENTS.

I. SPECIAL INSPECTION

1. SPECIAL INSPECTION SHALL BE PERFORMED BY AN INDEPENDENT INSPECTION AND TESTING AGENCY RETAINED BY THE CONTRACTOR AND APPROVED BY THE GOVERNMENT FOR ALL REINFORCED CONCRETE, HIGH STRENGTH BOLTS, STRUCTURAL STEEL WELDING, METAL DECK WELDING, SHEAR CONNECTOR WELDING AND POST-INSTALLED CONCRETE ANCHORS AND DOWELS IN ACCORDANCE WITH CHAPTER 17 AND TABLE 1704.5.3 OF THE INTERNATIONAL BUILDING CODE 2009.

2. CONTRACTOR SHALL SUBMIT COPIES OF ALL FIELD INSPECTION REPORTS TO THE CONTRACTING OFFICER AS A SUBMITTAL. REPORTS SHALL INCLUDE LOCATION AND DETAILED DESCRIPTION OF ITEMS INSPECTED. REPORTS OF NON-COMPLIANT WORK SHALL BE SUBMITTED WITHIN 3 WORKING DAYS OF INSPECTION.

3. AT THE END OF THE PROJECT, THE CONTRACTOR SHALL PROVIDE A SIGNED WRITTEN STATEMENT TO THE CONTRACTING OFFICER AS A SUBMITTAL THAT SPECIAL INSPECTION HAS BEEN PERFORMED ON ALL REQUIRED COMPONENTS OF THE PROJECT IN ACCORDANCE WITH 2009 IBC AND THAT INSTALLATION OF THESE COMPONENTS CONFORM TO THE CONTRACT DOCUMENTS AND RELATED CODES

FOR CONSTRUCTION

REVISIONS | DATE

CH2MHILL®
322 EAST FRONT STREET, SUITE 200, BOISE, ID 83702

PROFESSIONAL ENGINEER REGISTERED 7747 STATE OF IDAHO KENT B. SOELBERG 5-11-11

ZGA. Architects and Planners, Chartered
565 W. Myrtle Street, Suite 225 Boise, Idaho 83702-7606

CAD FILE NAME: 531-317_S0.1.DWG
XREF FILE NAME: 531-317_xVAbord.DWG

DRAWING TITLE: GENERAL STRUCTURAL NOTES	PROJECT TITLE: REPLACE AND MODERNIZE SURGERY / INTENSIVE CARE UNIT		DATE: 11/01/2011
			PROJECT NO.: 531-317
APPROVED: CHIEF OF FACILITY MANAGEMENT SERVICE	BUILDING NUMBER: 85	CHECKED: KBS / DRAWN: LAH	DRAWING NO.: S0.1
APPROVED: MEDICAL CENTER DIRECTOR	LOCATION: VAMC BOISE, IDAHO		DWG 55 OF 188

DEPARTMENT OF VETERANS AFFAIRS

STRUCTURAL ABBREVIATIONS

AB	ANCHOR BOLT
ACI	AMERICAN CONCRETE INSTITUTE
ADDEND	ADDENDUM
ADDTL, ADDT'L	ADDITIONAL
ADJ	ADJACENT
AESS	ARCHITECTURALLY EXPOSED STRUCTURAL STEEL
AFF	ABOVE FINISH FLOOR
AISC	AMERICAN INSTITUTE OF STEEL CONSTRUCTION
ALLOW	ALLOWABLE
ALTN	ALTERNATE
ALUM, AL	ALUMINUM
APPROX	APPROXIMATE
ARCH	ARCHITECTURAL
ASTM	AMERICAN SOCIETY FOR TESTING AND MATERIALS
AWS	AMERICAN WELDING SOCIETY
B.O.	BOTTOM OF
B.U.	BACKUP BAR
BLDG	BUILDING
BM	BEAM
BOT	BOTTOM
BRG	BEARING
BTWN	BETWEEN
C	CHANNEL
CJ	SLAB CONSTRUCTION JOINT OR CONTROL JOINT
CJP, CP	COMPLETE JOINT PENETRATION (WELD)
CL	CENTERLINE
CLARIF	CLARIFICATION
CLR	CLEARANCE
CLSM	CONTROLLED LOW-STRENGTH MATERIAL
CMU	CONC MASONRY UNIT
COL	COLUMN
CONC	CONCRETE
CONN	CONNECTION
CONT	CONTINUOUS
COORD	COORDINATE
CTR	CENTER
CTRD	CENTERED
DBA	DEFORMED BAR ANCHOR
DBL	DOUBLE
DEG	DEGREE
DIA	DIAMETER
DIM	DIMENSION
DIR	DIRECTION
DO	DITTO, DUPLICATE
DTI	DIRECT TENSION INDICATOR
DWG	DRAWING
EA	EACH
EF	EACH FACE
EJ, EXP JT	EXPANSION JOINT
EL	ELEVATION
ELEC	ELECTRICAL
EMBED	EMBED,EMBEDMENT
ENGR	ENGINEER
EQ	EQUAL, EQUALLY
EQ SP	EQUALLY SPACED
EQUIP	EQUIPMENT
ESR	EVALUATION SERVICE REPORT
EW	EACH WAY
EXST	EXISTING
EXTER	EXTERIOR
E/W	EAST/WEST
FD	FLOOR DRAIN
FDN	FOUNDATION
FF	FINISH FLOOR
FG, F.G.	FINISH GRADE
FLR	FLOOR
FT	FEET, FOOT
FTG	FOOTING
FTGS	FOOTINGS
FV	FIELD VERIFY
GA	GAUGE
GALV	GALVANIZED
HAS	HEADED ANCHOR STUD
HORZ, HORIZ	HORIZONTAL
HSS	HOLLOW STRUCTURAL SECTION (RECTANGULAR OR CIRCULAR)
IBC	INTERNATIONAL BUILDING CODE
ICC	INTERNATIONAL CODE COUNCIL
ID, I.D.	INSIDE DIAMETER
IF	INSIDE FACE
IN	INCHES, INCH
INCORP	INCORPORATED
INTER	INTERIOR
INTERM	INTERMEDIATE
JB	JOIST BEARING
JT	JOINT
K	KIP = 1,000 LBS
KSF	KIPS PER SQUARE FEET
L	ANGLE
LBS	POUND(S)
LIW	LOAD INDICATING WASHER
LLH	LONG LEG HORIZONTAL
LLV	LONG LEG VERTICAL
LNTL	LINTEL
LONG	LONGITUDINAL
MATL	MATERIAL
MFR, MANF	MANUFACTURER
MFRD	MANUFACTURED
MFR'S	MANUFACTURER'S
MAX	MAXIMUM
MB	MACHINE BOLT
MECH	MECHANICAL
MIN	MINIMUM
N	NORTH
NIC	NOT IN CONTRACT
NO.	NUMBER
NTS	NOT TO SCALE
N/S	NORTH/SOUTH
O TO O	OUT TO OUT
OC	ON-CENTER
OD, O.D.	OUTSIDE DIAMETER
OF	OUTSIDE FACE
OPNG	OPENING
OPNGS	OPENINGS
OPP	OPPOSITE
Pa	PASCAL (N/m)
PJP, PP	PARTIAL JOINT PENETRATION (WELD)
PAF	POWDER ACTUATED FASTENER
PERIM	PERIMETER
PJF	PREMOLDED JOINT FILLER
PL	PLATE
PLCS	PLACES
PRIM	PRIMARY
PSF	POUNDS PER SQUARE FEET
PSI	POUNDS PER SQUARE INCH
R	RADIUS
RDAA	REBAR DOWEL ADHESIVE ANCHOR
REINF	REINFORCE, REINFORCING
REQD, REQ'D	REQUIRED
RECT	RECTANGULAR, RECTANGLE
RFI	REQUEST FOR INFORMATION
RMHS	ROUND HEAD MACHINE SCREW
SC	SLIP CRITICAL (BOLTS)
SCHED	SCHEDULE
SH, SHT	SHEET
SIM	SIMILAR
SOG	SLAB-ON-GRADE
SPA	SPACING
SPCS	SPACES
SPEC	SPECIFICATION
SPECD, SPEC'D	SPECIFIED
SPECS	SPECIFICATIONS
SQ	SQUARE
SST	STAINLESS STEEL
STD	STANDARD
STIF	STIFFENER
STL	STEEL
STRUCT	STRUCTURAL
STS	SELF TAPPING SCREW
SYMM	SYMMETRICAL
TAS	THREADED ANCHOR STUD
T&B	TOP AND BOTTOM
THK	THICK, THICKNESS
TS	HOLLOW STRUCTURAL SECTION (RECTANGULAR OR CIRCULAR)
T.O.	TOP OF
TOC	TOP OF CONCRETE
TOF	TOP OF FOOTING
TOGB	TOP OF GRADE BEAM
TOPC	TOP OF PIER CAP
TOS	TOP OF STEEL
TOW,	TOP OF WALL
TRANS, TRANSV	TRANSVERSE
TYP	TYPICAL
UNIF	UNIFORM, UNIFORMLY
UON	UNLESS OTHERWISE NOTED
VERT	VERTICAL
W/	WITH
WDP	WEB DOUBLE PLATE
WF	WIDE FLANGE BEAM
WS	WATERSTOP
WWF	WELDED WIRE FABRIC

NOTE:
FOR ABBREVIATIONS NOT LISTED, SEE ASME Y14.38 "ABBREVIATIONS AND ACRONYMS" PUBLICATION AS DISTRIBUTED BY THE AMERICAN SOCIETY OF MECHANICAL ENGINEERS (ASME).

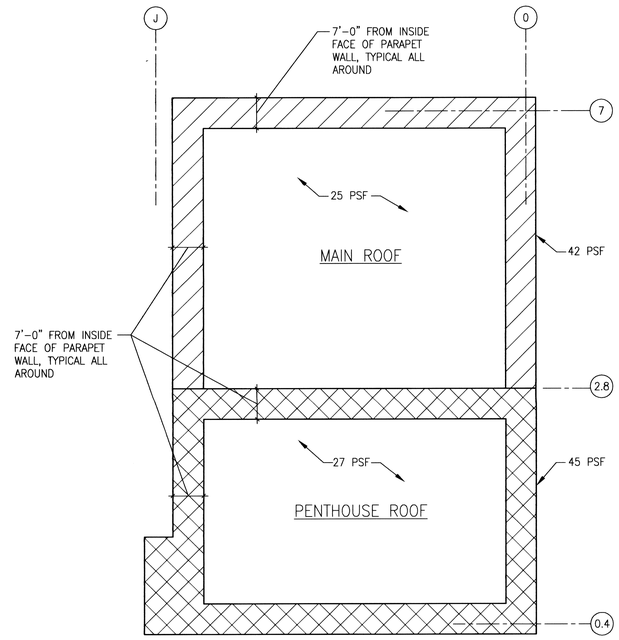

WIND UPLIFT ON ROOF
NTS

STRUCTURAL LEGEND

- ELEVATION
- COMPACTED STRUCTURAL FILL
- DIRECTION OF SLOPE
- WIDE FLANGE COLUMN
- HSS COLUMN
- STEEL COLUMN SUPPORTED BY WIDE FLANGE TRANSFER GIRDER, SEE DETAIL 10 ON S4.1
- BEAM TO COLUMN CONNECTION, SEE DETAIL 2 ON S4.1
- BEAM TO BEAM CONNECTION, SEE DETAIL 1 ON S4.1
- BEAM TO COLUMN MOMENT CONNECTION FOR SPECIAL MOMENT FRAMES, SEE DETAIL 1 ON S4.6
- BEAM TO COLUMN MOMENT CONNECTION AT LOCATIONS OTHER THAN SPECIAL MOMENT FRAMES, SEE DETAIL 3 ON S4.1
- BEAM TO BEAM MOMENT CONNECTION, SEE DETAIL 5 ON S4.1
- BEAM CONNECTION TO HSS POST, SEE DETAIL 4 ON S4.1
- [32] WELDED SHEAR CONNECTOR INDICATOR, SEE DETAIL 1 ON S4.5
- 1 METAL DECK TYPE AND DIRECTION OF SPAN, SEE SCHEDULE, SHEET S4.5
- METAL ROOF DECK WITHOUT CONCRETE TOPPING
- BA BRACE ANGLE, SEE DETAIL 4 ON S4.2
  - INDICATES CONNECTION TO BOTTOM FLANGE
- DEPRESSED SLAB

REVISIONS	DATE

CH2MHILL®
322 EAST FRONT STREET, SUITE 200, BOISE, ID 83702

PROFESSIONAL ENGINEER REGISTERED 7747 STATE OF IDAHO KENT B. SOELBERG 5-11-11

ZGA. Architects and Planners, Chartered
565 W. Myrtle Street, Suite 225 Boise, Idaho 83702-7606

CAD FILE NAME: 531-317_S0.2.DWG
XREF FILE NAME: 531-317_xVAbord.DWG

DRAWING TITLE: STRUCTURAL ABBREVIATIONS AND LEGEND
APPROVED: CHIEF OF FACILITY MANAGEMENT SERVICE
APPROVED: MEDICAL CENTER DIRECTOR

PROJECT TITLE: REPLACE AND MODERNIZE SURGERY / INTENSIVE CARE UNIT
BUILDING NUMBER: 85
CHECKED: KBS
DRAWN: LAH
LOCATION: VAMC BOISE, IDAHO

DATE: 11/01/2011
PROJECT NO.: 531-317
DRAWING NO.: S0.2
DWG 56 OF 188

FOR CONSTRUCTION
DEPARTMENT OF VETERANS AFFAIRS

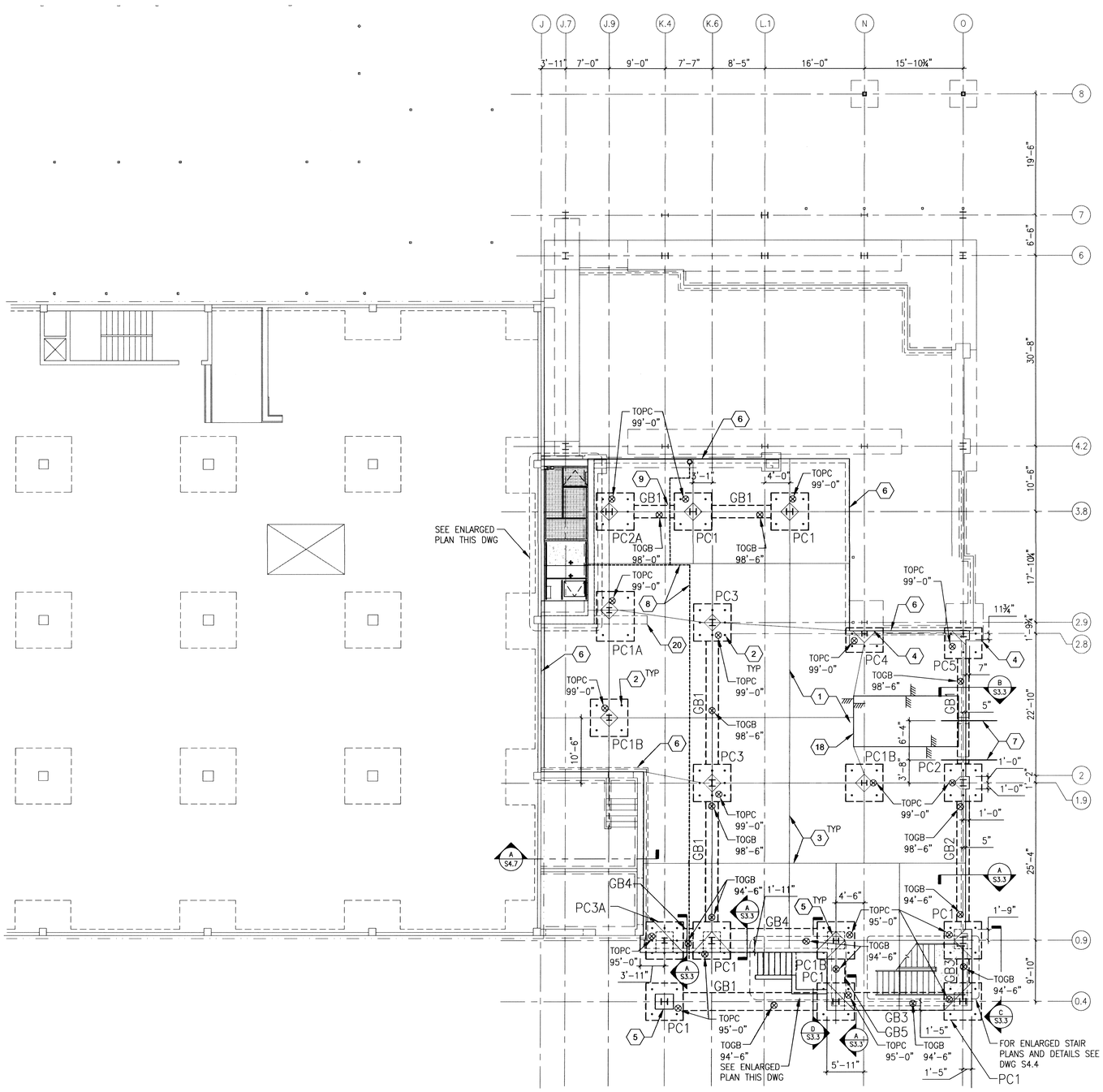

FIRST FLOOR FRAMING/FOUNDATION PLAN
1/8"=1-0"

TOC 100'-0" (TYP UON)

PLAN NORTH

0 4' 8' 16'

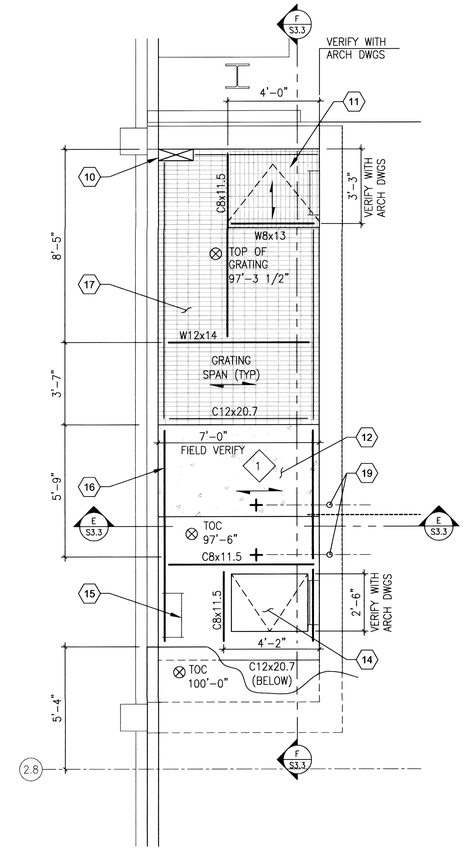

ENLARGED PLAN
3/8"=1-0"

PLAN NORTH

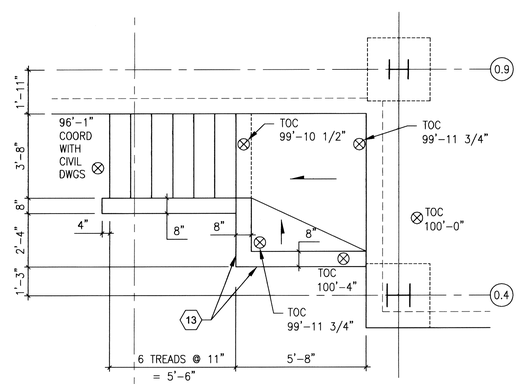

NOTES:

1. FOR CONCRETE STEP AND STEM WALL REINFORCING, NOSING AND GUARDRAIL LAYOUT, SEE DETAIL 7 ON DRAWING S3.1.
2. COORDINATE WITH ARCHITECTURAL DRAWINGS.

ENLARGED PLAN
3/8"=1-0"

PLAN NORTH

GENERAL SHEET NOTES

A. FOR GENERAL STRUCTURAL NOTES, ABBREVIATIONS, AND LEGEND SEE DRAWINGS S0.1 AND S0.2.

B. ALL DIMENSIONS ARE TO THE CENTERLINE OF MEMBERS, BACK FACE OF CHANNEL MEMBERS, OR FACE OF WALL. COLUMNS SHALL BE CENTERED ON GRIDLINES (TYP UNLESS OTHERWISE NOTED).

C. COORDINATE STEEL STAIRS AND HANDRAILS WITH ARCHITECT. SEE DRAWING S4.4.

D. FOR TYPICAL FOUNDATION PREPARATION SEE DETAIL 1 ON DRAWING S3.1.

E. SIZE AND LOCATION OF FLOOR DRAINS AND UNDERSLAB UTILITIES NOT SHOWN. COORDINATE WITH ARCHITECTURAL, MECHANICAL, AND ELECTRICAL.

F. SEE DRAWING S3.1 FOR TYPICAL CONCRETE DETAILS NOT SHOWN.

G. FOR GRADE BEAM AND PILE CAP SCHEDULES AND DETAILS SEE DRAWING S3.2.

H. ◇1 INDICATES METAL DECK TYPE. FOR METAL DECK INFORMATION AND DETAILS SEE DRAWING S4.5.

J. FOR LENGTH OF PILES, SEE DETAIL 1 ON DRAWING S3.2

SHEET KEYNOTES

1. 4" CONCRETE SLAB ON GRADE. REINFORCE WITH BLENDED FIBER REINFORCING AS SPECIFIED. TOP OF SLAB EL 100'-0" UNLESS OTHERWISE NOTED
2. MICROPILE, SEE DRAWING S3.2
3. PROVIDE CONSTRUCTION OR CONTROL JOINTS AT ALL GRIDLINES AND MIDWAY BETWEEN GRIDLINES IN EACH DIRECTION; JOINT SPACING SHALL NOT EXCEED 16'-0" ON CENTER AND MAXIMUM ADJACENT SIDE RATIO SHALL BE 1.5:1 UNLESS OTHERWISE APPROVED. SEE DETAIL 1 ON DRAWING S3.1
4. FOR SELECTIVE DEMOLITION AT EXISTING FOOTINGS AND CONNECTION OF NEW TO EXISTING FOUNDATIONS, SEE DETAIL 1 ON DRAWING S3.3.
5. CONCRETE PEDESTAL, SEE DETAIL 5 ON DRAWING S3.2
6. THICKEN EDGE OF SLAB AGAINST EXISTING STRUCTURE, SEE DETAIL 6 ON DRAWING S3.1
7. CENTERLINE SLEEVE PER DETAIL 5 ON DRAWING S3.1 FOR MECHANICAL LINE, SEE MECHANICAL DRAWING P2.4.
8. RETAIN AND PROTECT EXISTING 6" SANITARY SEWER LINE, SEE MECHANICAL DRAWING P2.4 AND CIVIL DRAWING C2.0.
9. TOP OF GRADE BEAM MAY BE ADJUSTED (RAISED OR LOWERED) BY 6" TO ACCOMMODATE RELOCATED SANITARY SEWER. COORDINATE WITH MECHANICAL DRAWING P2.4.
10. 18" LONG x 6" WIDE CLEAR OPENING IN GRATING AT CORNER.
11. PROVIDE HINGED SECTION OF GRATING FOR ACCESS TO AREAWAY BELOW. COORDINATE WITH ARCHITECTURAL
12. 4'-0"x7'-0"x4" THICK CONCRETE EQUIPMENT PAD. SEE DETAIL 8 ON DRAWING S3.1
13. CONCRETE STEM WALL
14. CAST-IN FLOOR HATCH, SEE ARCHITECTURAL.
15. LADDER, SEE ARCHITECTURAL (TYPICAL 3 PLACES) FOR LOCATION AND INSTALLATION.
16. LEDGER ANGLE SUPPORT FOR METAL DECK, SEE DETAIL 3 ON DRAWING S4.2
17. GALV GRATING WITH MINIMUM 1" DEEP x 3/16" THICK BEARING BARS FOR GRATING SUPPORT LEDGER, SEE DETAIL 3 ON DRAWING S4.2 (SIM) FOR SUPPORT LEDGER.
18. DEPRESS FLOOR 3", TOP OF SLAB ELEVATION 99'-9". SEE DETAIL 10 ON DRAWING S3.1. SEE ARCH DRAWING A2.1C FOR LOCATION AND EXTENT.
19. CENTERLINE OF EYEHOOK INSTALLED AT UNDERSIDE OF CONCRETE PLATFORM. SEE DETAIL 7 ON DRAWING S6.2. CENTER THE EYEHOOK OVER THE EXISTING EJECTOR PUMP PIT. COORDINATE FINAL LOCATION WITH CONTRACTING OFFICER.
20. DEMOLISH EXISTING FOUNDATION WALL BELOW PILE CAP PC1A TO ELEVATION 95'-0".

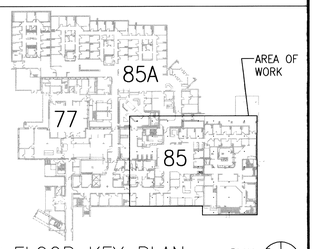

FIRST FLOOR KEY PLAN
NOT TO SCALE

PLAN NORTH

FOR CONSTRUCTION

REVISIONS | DATE

CH2MHILL®
322 EAST FRONT STREET, SUITE 200, BOISE, ID 83702

PROFESSIONAL ENGINEER 7747 STATE OF IDAHO KENT B. SOELBERG 5-11-11

ZSA. Architects and Planners, Chartered
565 W. Myrtle Street, Suite 225 Boise, Idaho 83702-7606

CAD FILE NAME: 531-317_2.1.DWG
XREF FILE NAME: 85S1FO.DWG, 85S1FO_X.DWG, 85SGRID.DWG, 531-317_xVAbord.DWG

DRAWING TITLE: FIRST FLOOR FRAMING/FOUNDATION PLAN

PROJECT TITLE: REPLACE AND MODERNIZE SURGERY / INTENSIVE CARE UNIT

DATE: 11/01/2011
PROJECT NO. 531-317

APPROVED: CHIEF OF FACILITY MANAGEMENT SERVICE
APPROVED: MEDICAL CENTER DIRECTOR

BUILDING NUMBER: 85 | CHECKED: KBS | DRAWN: LAH

LOCATION: VAMC BOISE, IDAHO

DRAWING NO. S2.1

DEPARTMENT OF VETERANS AFFAIRS

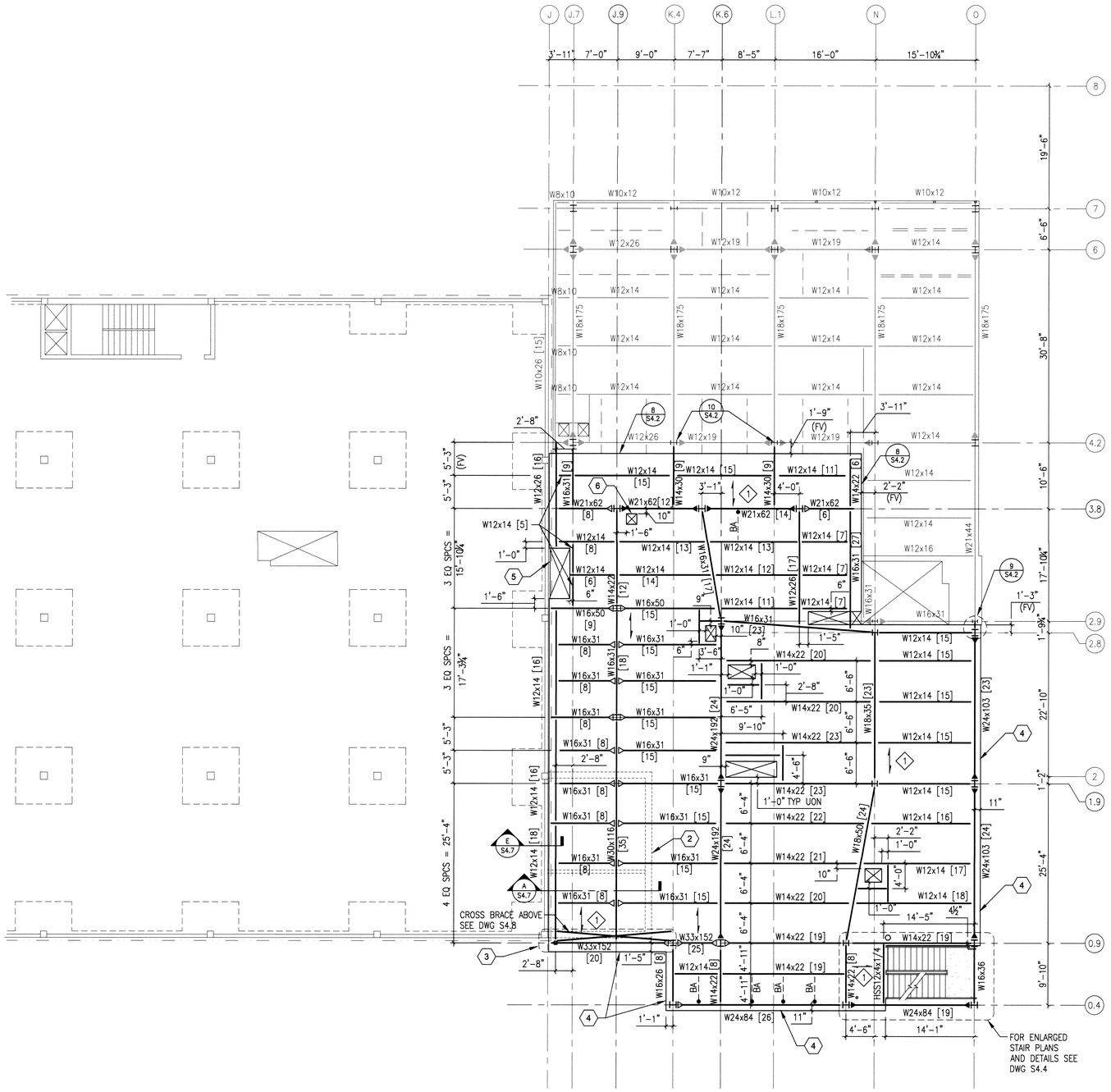

SECOND FLOOR FRAMING PLAN

1/8"=1-0"

TOS EL 111'-5½" (TYP UON)
TOC EL 112'-0" (TYP UON)

0 4' 8' 16'

PLAN NORTH

GENERAL SHEET NOTES

A. FOR GENERAL STRUCTURAL NOTES, ABBREVIATIONS, AND LEGEND SEE DRAWINGS S0.1 AND S0.2.

B. ALL DIMENSIONS ARE TO THE CENTERLINE OF MEMBERS, BACK FACE OF CHANNEL MEMBERS, OR FACE OF WALL. COLUMNS SHALL BE CENTERED ON GRIDLINES (TYPICAL UNLESS OTHERWISE NOTED). BEAMS SHALL BE EQUALLY SPACED BETWEEN GRIDS UNLESS SPECIFICALLY DIMENSIONED OTHERWISE.

C. COORDINATE STEEL STAIRS AND HANDRAILS WITH ARCHITECT. SEE DRAWING S4.4.

D. FOR SKEWED CONNECTIONS SEE DETAIL 2 ON S4.2.

E. ◇1 INDICATES METAL DECK TYPE. FOR METAL DECK SCHEDULE AND RELATED DETAILS, SEE DWG S4.5.

F. COORDINATE EXTERIOR BRICK SUPPORT WITH ARCHITECT. FOR TYPICAL EXTERIOR BRICK SUPPORT DETAILS SEE DRAWING S4.2.

G. BOTTOM OF BRICK LEDGER ELEVATION 111'-8 1/4", SEE DETAIL 6 ON S4.2.

H. SECONDARY FRAMING MEMBERS AROUND OPENINGS SHALL BE W12x14 UNLESS OTHERWISE NOTED. PROVIDE SHEAR CONNECTORS AT 12" ON CENTER (MAXIMUM).

SHEET KEYNOTES

1. NOT USED
2. DEMO TOP OF EXISTING ELECTRICAL ROOM CMU WALL, SEE SECTION A ON DRAWING S4.7. PROTECT EXISTING STRUCTURE AND EQUIPMENT TO REMAIN
3. LOUVER SUPPORT FRAME, SEE DETAIL 2 ON DRAWING S4.7
4. ARCHITECTURAL PRECAST PANELS AT LOCATIONS INDICATED. SEE ARCHITECTURAL DRAWINGS FOR DIMENSIONS, SHAPES, LOCATIONS, AND DETAILS. PRECASTER TO DESIGN SUPPORT DETAILS MEETING INTENT SHOWN ON DETAILS 5 AND 6 OF DRAWING S4.8
5. HSS 4x4, SEE DETAIL 3 ON DRAWING S4.7
6. 1'-8"x1'-8" OPENING, SEE DETAIL 5 ON DRAWING S4.5 FOR SUPPLEMENTAL FRAMING.

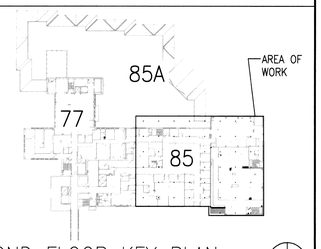

SECOND FLOOR KEY PLAN
NOT TO SCALE

PLAN NORTH

FOR CONSTRUCTION

REVISIONS	DATE

CH2MHILL®
322 EAST FRONT STREET, SUITE 200, BOISE, ID 83702

PROFESSIONAL ENGINEER 7747 11-1-11 STATE OF IDAHO HENRY B. SOELBERG

ZGA. Architects and Planners, Chartered
565 W. Myrtle Street, Suite 225 Boise, Idaho 83702-7606

CAD FILE NAME: 531-317_S2.2.DWG

XREF FILE NAME: 85S2FR.DWG, 85S2FR_X.DWG, 85SGRID.DWG, 531-317_xVAbord.DWG

DRAWING TITLE: SECOND FLOOR FRAMING PLAN

APPROVED: CHIEF OF FACILITY MANAGEMENT SERVICE

APPROVED: MEDICAL CENTER DIRECTOR

PROJECT TITLE: REPLACE AND MODERNIZE SURGERY / INTENSIVE CARE UNIT

BUILDING NUMBER: 85 | CHECKED: KBS | DRAWN: LAH

LOCATION: VAMC BOISE, IDAHO

DATE: 11/01/2011

PROJECT NO. 531-317

DRAWING NO. S2.2

DWG 58 OF 188

DEPARTMENT OF VETERANS AFFAIRS

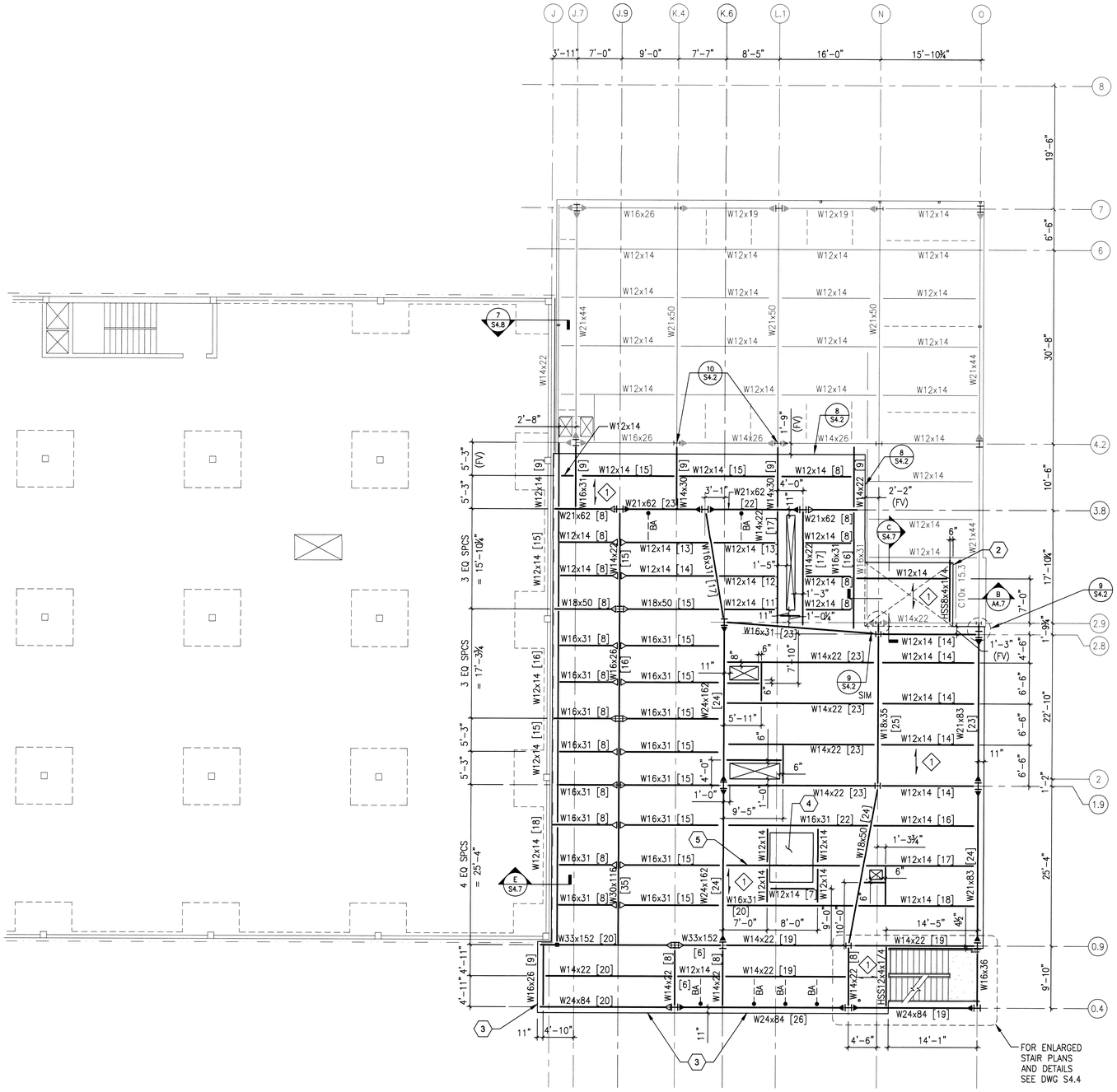

THIRD FLOOR FRAMING PLAN

1/8"=1-0"

0 4' 8' 16'

TOS EL 124'-1½" (TYP UON)
TOC EL 124'-8" (TYP UON)

PLAN NORTH

GENERAL SHEET NOTES

A. FOR GENERAL STRUCTURAL NOTES, ABBREVIATIONS, AND LEGEND SEE DRAWINGS S0.1 AND S0.2.

B. ALL DIMENSIONS ARE TO THE CENTERLINE OF MEMBERS, BACK FACE OF CHANNEL MEMBERS, OR FACE OF WALL. COLUMNS SHALL BE CENTERED ON GRIDLINES (TYPICAL UNLESS OTHERWISE NOTED). BEAMS SHALL BE EQUALLY SPACED BETWEEN GRIDS UNLESS SPECIFICALLY DIMENSIONED OTHERWISE.

C. COORDINATE STEEL STAIRS AND HANDRAILS WITH ARCHITECT. SEE DRAWING S4.4.

D. FOR SKEWED CONNECTIONS SEE DETAIL 2 ON S4.2.

E. (1) INDICATES METAL DECK TYPE. FOR METAL DECK SCHEDULE AND RELATED DETAILS, SEE DWG S4.5.

F. COORDINATE EXTERIOR BRICK SUPPORT WITH ARCHITECT. FOR TYPICAL EXTERIOR BRICK SUPPORT DETAILS SEE DRAWING S4.2.

G. BOTTOM OF BRICK LEDGER ELEVATION 124'-6 1/2". SEE DETAIL 6 ON S4.2.

H. SECONDARY FRAMING MEMBERS AROUND OPENINGS SHALL BE W12x14 UNLESS OTHERWISE NOTED. PROVIDE SHEAR CONNECTORS AT 12" ON CENTER (MAXIMUM).

I. FOR SUPPORT OF MEDICAL EQUIPMENT AT 3RD FLOOR LEVEL, SEE DRAWING S6.1.

SHEET KEYNOTES

1. NOT USED
2. INFILL EXISTING FLOOR OPENING
3. ARCHITECTURAL PRECAST PANELS AT LOCATIONS INDICATED. SEE ARCHITECTURAL DRAWINGS FOR DIMENSIONS, SHAPES, LOCATIONS, AND DETAILS. PRECASTER TO DESIGN SUPPORT DETAILS MEETING INTENT SHOWN ON DETAILS 5 AND 6 OF DRAWING S4.8.
4. RECESSED FLOOR SLAB. SEE ARCHITECTURAL DRAWING FOR LOCATION AND EXTENT. SEE DETAIL 8, DRAWING S4.5.
5. W16x31. ATTACH METAL DECK TO BEAM USING PUDDLE WELDS AS SPECIFIED. DO NOT INSTALL SHEAR CONNECTORS.

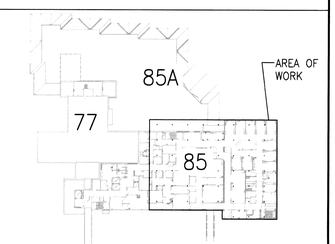

THIRD FLOOR KEY PLAN

NOT TO SCALE

PLAN NORTH

FOR CONSTRUCTION

REVISIONS	DATE

CH2MHILL®
322 EAST FRONT STREET, SUITE 200, BOISE, ID 83702

PROFESSIONAL ENGINEER 7747 STATE OF IDAHO KENT B. SOELBERG

ZGA. Architects and Planners, Chartered
565 W. Myrtle Street, Suite 225 Boise, Idaho 83702-7606

CAD FILE NAME: 531-317_S2.3.DWG

XREF FILE NAME: 85S3FR.DWG, 85S3FR_X.DWG, 85SGRID.DWG, 531-317_xVAbord.DWG

DRAWING TITLE	THIRD FLOOR FRAMING PLAN
APPROVED: CHIEF OF FACILITY MANAGEMENT SERVICE	
APPROVED: MEDICAL CENTER DIRECTOR	
PROJECT TITLE	REPLACE AND MODERNIZE SURGERY / INTENSIVE CARE UNIT
BUILDING NUMBER	85
CHECKED	KBS
DRAWN	LAH
LOCATION	VAMC BOISE, IDAHO
DATE	11/01/2011
PROJECT NO.	531-317
DRAWING NO.	S2.3
DWG	59 OF 188

DEPARTMENT OF VETERANS AFFAIRS

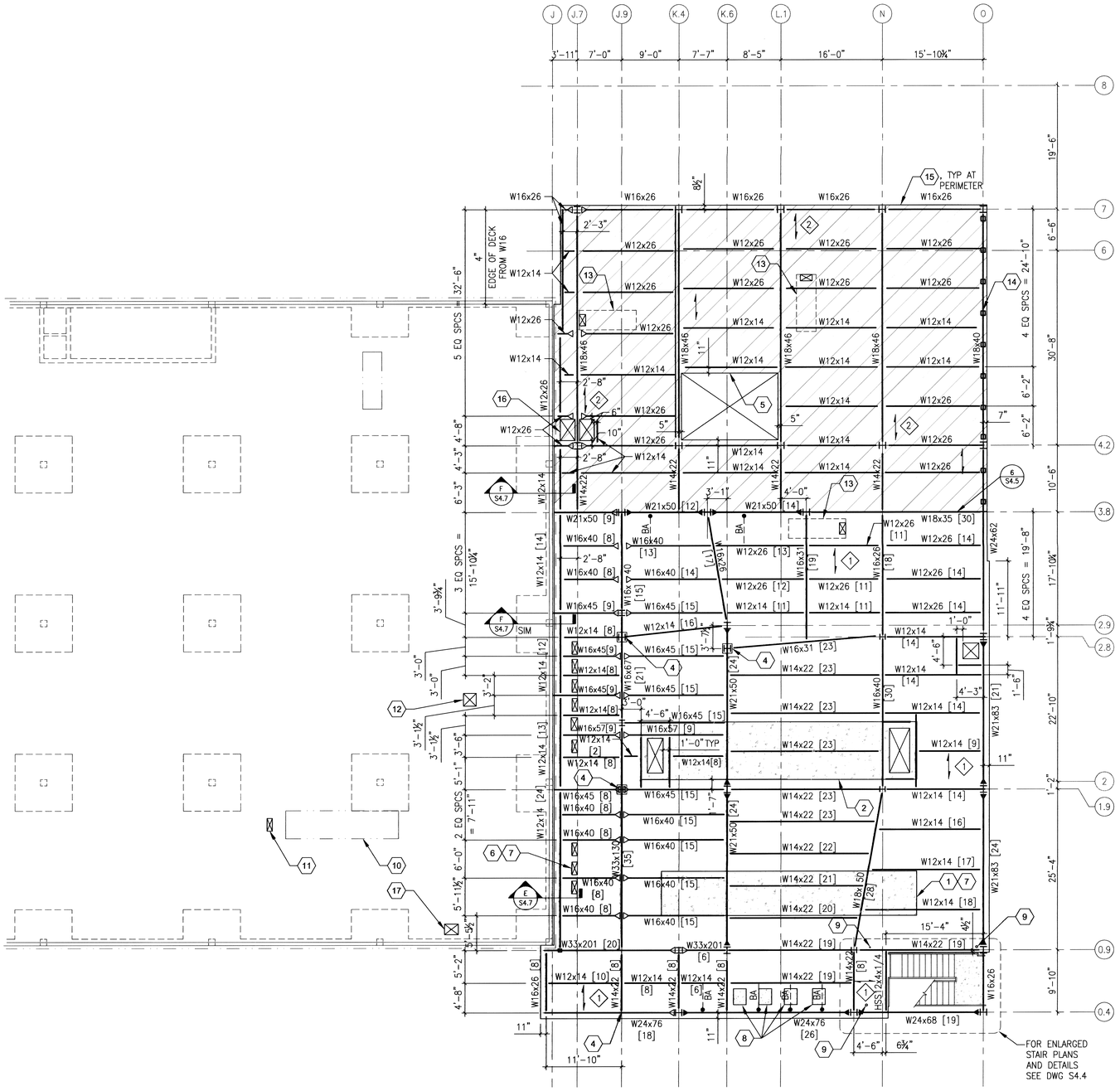

ROOF/PENTHOUSE FLOOR FRAMING PLAN
1/8"=1-0"

0 4' 8' 16'

GENERAL SHEET NOTES

A. FOR GENERAL STRUCTURAL NOTES, ABBREVIATIONS, AND LEGEND SEE DRAWINGS S0.1 AND S0.2.

B. ALL DIMENSIONS ARE TO THE CENTERLINE OF MEMBERS, BACK FACE OF CHANNEL MEMBERS, OR FACE OF WALL. COLUMNS SHALL BE CENTERED ON GRIDLINES (TYPICAL UNLESS OTHERWISE NOTED). BEAMS SHALL BE EQUALLY SPACED BETWEEN GRIDS UNLESS SPECIFICALLY DIMENSIONED OTHERWISE.

C. COORDINATE STEEL STAIRS AND HANDRAILS WITH ARCHITECT. SEE DRAWING S4.4.

D. FOR SKEWED CONNECTIONS SEE DETAIL 2 ON S4.2.

E. (1) INDICATES METAL DECK TYPE. FOR METAL DECK SCHEDULE AND RELATED DETAILS, SEE DWG S4.5.

F. FOR TYPICAL FLOOR AND ROOF OPENING REINFORCING SEE DETAIL 3 AND 4 ON DWG S4.5.

G. COORDINATE EXTERIOR BRICK SUPPORT AND PARAPET WITH ARCHITECT. FOR TYPICAL EXTERIOR BRICK SUPPORT DETAILS SEE DRAWING S4.2.

H. DIMENSIONS SHOWN FOR EQUIPMENT PADS ARE FOR BID PURPOSES ONLY. COORDINATE SIZE AND LOCATION WITH EQUIPMENT SUPPLIER AND ARCHITECT.

I. NO BRICK LEDGER REQUIRED AT ROOF/PENTHOUSE FLOOR LEVEL.

H. SECONDARY FRAMING MEMBERS AROUND OPENINGS SHALL BE W12x14 UNLESS OTHERWISE NOTED. PROVIDE SHEAR CONNECTORS AT 12" ON CENTER (MAXIMUM).

SHEET KEYNOTES

1. AHU-16 (OPERATING WEIGHT = 13,000 LBS) WITH 7'-0" x 39'-0" x 6" THICK CONCRETE EQUIPMENT PAD. SEE DETAIL 8 ON DRAWING S3.1
2. AHU-15 (OPERATING WEIGHT = 20,000 LBS) WITH 9'-1" x 43'-4" x 6" THICK CONCRETE EQUIPMENT PAD. SEE DETAIL 8 ON DRAWING S3.1
3. NOT USED
4. COLUMN SUPPORTED BY TRANSFER GIRDER, SEE DETAIL 10 ON DRAWING S4.1
5. SKYLIGHT, FOR EDGE OF DECK AT SKYLIGHT SEE DETAIL 9 ON DRAWING S5.2
6. BLOCKOUT FOR MECHANICAL DUCTWORK PENETRATION (TYPICAL 9 LOCATIONS). COORDINATE SIZE AND LOCATION WITH MECHANICAL SHEET M2.3. SEE DETAIL 5 ON DRAWING S4.5 FOR DECK REINFORCING
7. OMIT THIS WORK UNDER DEDUCT ALTERNATE #6
8. 2'-0"x2'-2"x4" HIGH CONCRETE EQUIPMENT PADS. SEE DETAIL 8 ON DRAWING S3.1.
9. CORE DRILL OR PIPE SLEEVE THROUGH SLAB FOR MECHANICAL PIPE RISER, SEE MECHANICAL FOR EXACT SIZE AND LOCATION
10. EXISTING ROOF MOUNTED UNIT (AHU-12) TO REMAIN.
11. PROVIDE 28"x18" ROUGH OPENING IN EXISTING ROOF SLAB. COORDINATE WITH MECHANICAL DRAWINGS M1.1B AND M0.6. SEE DETAIL 11 ON DRAWING S3.1
12. PROVIDE 14"x14" ROUGH OPENING IN EXISTING ROOF SLAB. COORDINATE LOCATION WITH MECHANICAL SHEET M2.4B
13. EXHAUST FAN (OPERATING WEIGHT = 2,000 LBS)
14. HSS PARAPET SUPPORT POSTS AT MAXIMUM 5'-4" SPACING, WHERE INDICATED. SEE DETAIL 8 ON DRAWING S5.2.
15. FOR EXTERIOR METAL STUDS SUPPORTING VENEER, SEE DRAWINGS S5.1 AND S5.2.
16. 600T200 BOX SECTION SEE DRAWING S5.2
17. NEW ROOF PENETRATION (30x24 ROUGH OPENING) COORDINATE LOCATION WITH MECHANICAL, SEE DETAIL 11 ON DRAWING S3.1

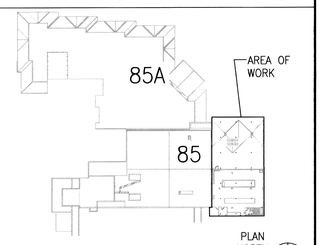

ROOF/PENTHOUSE KEY PLAN
NOT TO SCALE

FOR CONSTRUCTION

REVISIONS	DATE

CH2MHILL®
322 EAST FRONT STREET, SUITE 200, BOISE, ID 83702

PROFESSIONAL ENGINEER 7727 STATE OF IDAHO KENT B. SOELBERG 11-1-11

ZGA. Architects and Planners, Chartered
565 W. Myrtle Street, Suite 225 Boise, Idaho 83702-7606

CAD FILE NAME: 531-317_S2.4.DWG
XREF FILE NAME: 85SPHFR.DWG 85SGRID.DWG 531-317_xVAbord.DWG

DRAWING TITLE: MAIN ROOF/PENTHOUSE FLOOR FRAMING PLAN

PROJECT TITLE: REPLACE AND MODERNIZE SURGERY / INTENSIVE CARE UNIT

DATE: 11/01/2011
PROJECT NO. 531-317

APPROVED: CHIEF OF FACILITY MANAGEMENT SERVICE
APPROVED: MEDICAL CENTER DIRECTOR

BUILDING NUMBER: 85
CHECKED: KBS
DRAWN: LAH
LOCATION: VAMC BOISE, IDAHO

DRAWING NO. S2.4
DWG 60 OF 188

DEPARTMENT OF VETERANS AFFAIRS

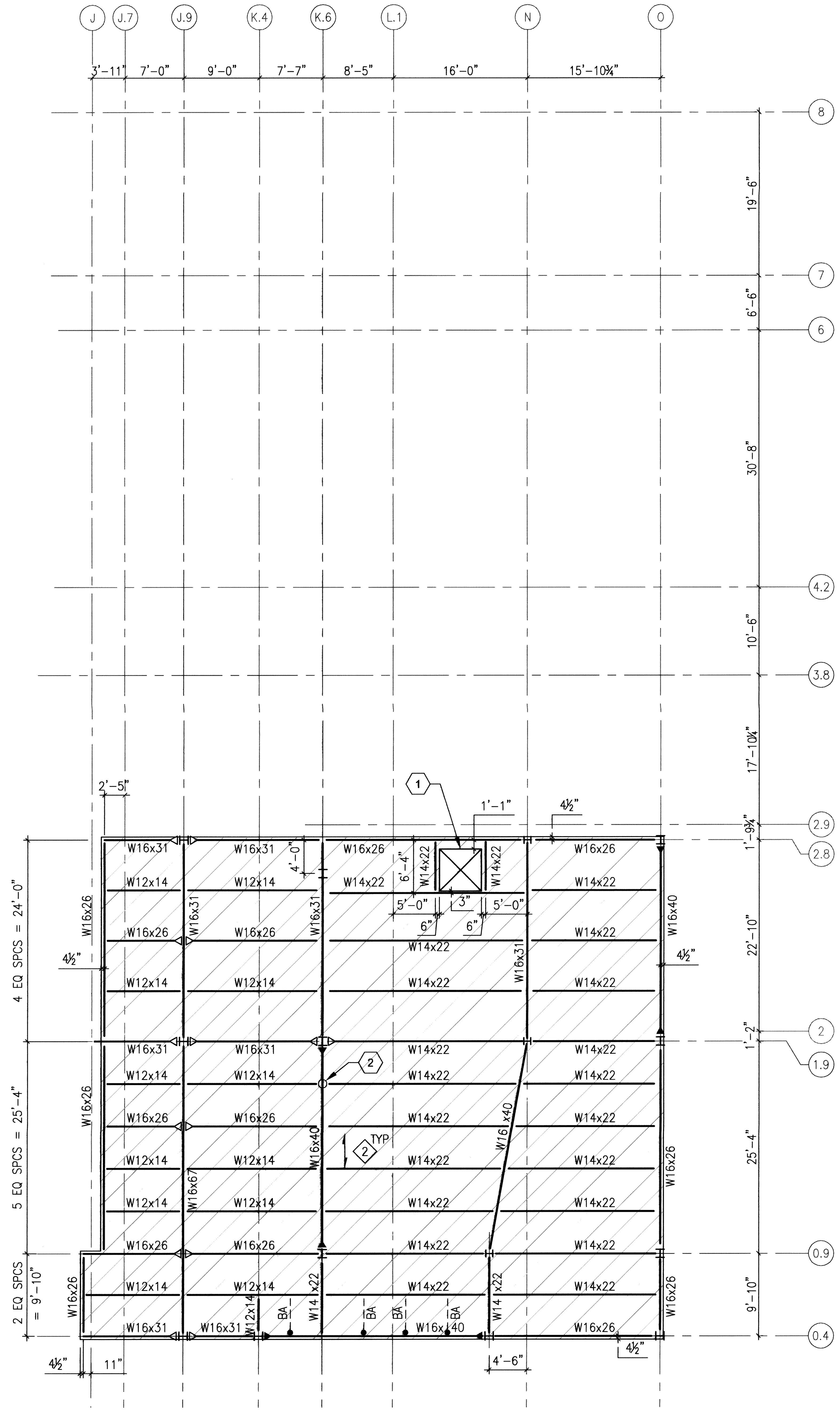

PENTHOUSE ROOF FRAMING PLAN

1/8"=1-0"

TOS EL 154'-0" (TYP UON)

0 4' 8' 16'

PLAN NORTH

GENERAL SHEET NOTES

A. FOR GENERAL STRUCTURAL NOTES, ABBREVIATIONS, AND LEGEND SEE DRAWINGS S0.1 AND S0.2.

B. ALL DIMENSIONS ARE TO THE CENTERLINE OF MEMBERS, BACK FACE OF CHANNEL MEMBERS, OR FACE OF WALL. COLUMNS SHALL BE CENTERED ON GRIDLINES (TYP UNLESS OTHERWISE NOTED). BEAMS SHALL BE EQUALLY SPACED BETWEEN GRIDS UNLESS SPECIFICALLY DIMENSIONED OTHERWISE.

C. FOR SKEWED CONNECTIONS SEE DETAIL 2 ON S4.2.

D. ⟨1⟩ INDICATES METAL DECK TYPE. FOR METAL DECK SCHEDULE AND RELATED DETAILS, SEE DWG S4.5

SHEET KEYNOTES

1. ROOF HATCH OPENING. SEE ARCHITECTURAL FOR HATCH INFORMATION. FOR EDGE OF DECK DETAIL SEE DETAIL 9 ON DRAWING S5.2 (SIM)
2. FALL PROTECTION TIE-OFF ANCHOR. SEE DETAIL 4, DRAWING S4.7.

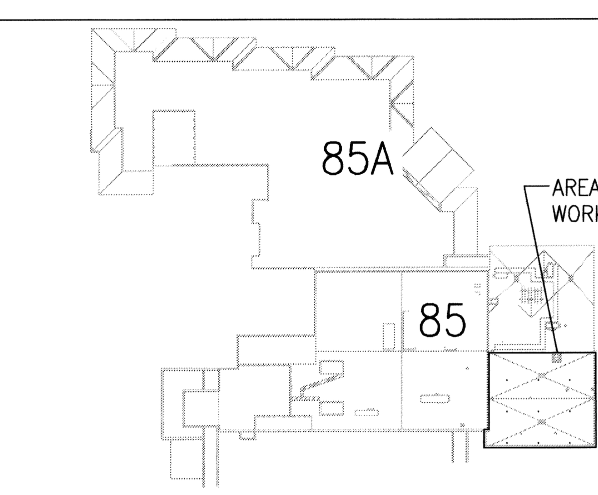

PENTHOUSE ROOF KEY PLAN

PLAN NORTH

NOT TO SCALE

FOR CONSTRUCTION

REVISIONS	DATE

CH2MHILL®
322 EAST FRONT STREET, SUITE 200, BOISE, ID 83702

PROFESSIONAL ENGINEER REGISTERED 7747 11-1-11 STATE OF IDAHO KENT B. SOELBERG

ZGA Architects and Planners, Chartered
565 W. Myrtle Street, Suite 225 Boise, Idaho 83702-7606

CAD FILE NAME: 531-317_S2.5.DWG
XREF FILE NAME: 85S4RFR.DWG 85SGRID.DWG 531-317_xVAbord.DWG

DRAWING TITLE: PENTHOUSE ROOF FRAMING PLAN

APPROVED: CHIEF OF FACILITY MANAGEMENT SERVICE

APPROVED: MEDICAL CENTER DIRECTOR

PROJECT TITLE: REPLACE AND MODERNIZE SURGERY / INTENSIVE CARE UNIT

BUILDING NUMBER: 85 | CHECKED: KBS | DRAWN: LAH

LOCATION: VAMC BOISE, IDAHO

DATE: 11/01/2011

PROJECT NO.: 531-317

DRAWING NO.: S2.5

DWG 61 OF 188

DEPARTMENT OF VETERANS AFFAIRS

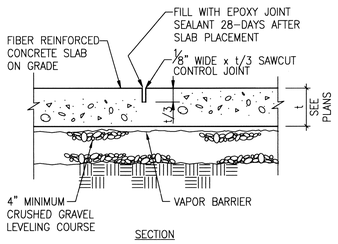

CONTROL JOINT

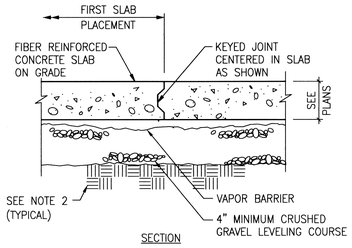

CONSTRUCTION JOINT

NOTES:

1. SAWCUTTING MAY BE USED FOR INTERIOR CONCRETE SLAB JOINTS. ALL SAWCUTS SHALL BE MADE AS SOON AS THE SURFACE OF CONCRETE IS FIRM ENOUGH SO CUTTING WILL NOT TEAR WITHIN 12-HOURS OF CONCRETE PLACEMENT.
2. PROVIDE COMPACTED BACKFILL BETWEEN COMPACTED OVERBREAK ON ROCK AND CRUSHED GRAVEL LEVELING COURSE. COMPACTED BACKFILL SHALL CONSIST OF WELL-GRADED, WELL-DRAINING 3-INCH MINUS GRANULAR IMPORT MATERIAL WITH NO ORGANICS AND A MAXIMUM OF 10 PERCENT FINES. BACKFILL SHALL BE PLACED IN LIFTS WITH A MAXIMUM THICKNESS OF 9 INCHES. EACH LIFT SHALL BE COMPACTED TO AT LEAST 95 PERCENT RELATIVE COMPACTION BY ASTM D1557.
3. FOR CONCRETE SLAB REINFORCEMENT DETAILS NOT SHOWN, SEE PLANS.
4. SEE PLAN FOR JOINT LAYOUT REQUIREMENTS.

1 TYPICAL CONCRETE SLAB ON GRADE
NTS

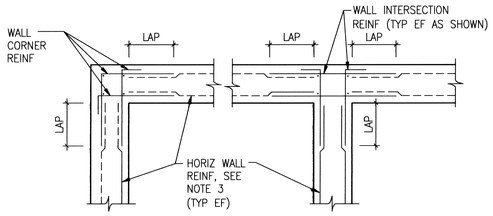

DOUBLE MAT

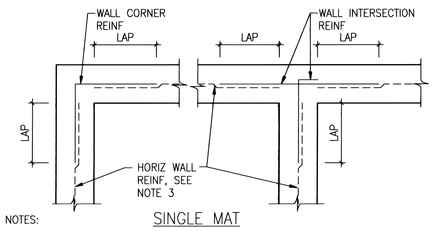

SINGLE MAT

NOTES:

1. HORIZONTAL WALL REINFORCING SIZE AND SPACING SHALL MATCH TYPICAL HORIZONTAL WALL REINFORCING SHOWN ON PLANS AND SECTIONS (TYPICAL UNLESS OTHERWISE NOTED).
2. HORIZONTAL WALL CORNER AND INTERSECTION REINFORCING SIZE AND SPACING SHALL MATCH HORIZONTAL WALL REINFORCING (TYPICAL UNLESS OTHERWISE NOTED).
3. REQUIRED LAP LENGTH SHOWN SHALL BE BASED ON THE SMALLER OF THE TWO REINFORCING BARS BEING SPLICED.
4. PROVIDE STANDARD ACI-318 90-DEGREE HOOK ON WALL CORNER AND INTERSECTION REINFORCING AS SHOWN (TYPICAL UNLESS OTHERWISE NOTED).

2 CONCRETE WALL CORNER & INTERSECTION REINFORCEMENT
NTS

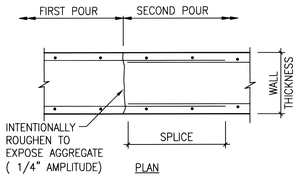

VERTICAL CONSTRUCTION JOINT

NOTE:
CONTRACTOR SHALL PROVIDE A JOINT (CONSTRUCTION OR CONTROL) AT MAXIMUM 60' ON CENTER, & WITHIN 10' OF CORNERS AT ONE OF THE CONNECTING WALLS

3 TYPICAL WALL JOINT
NTS

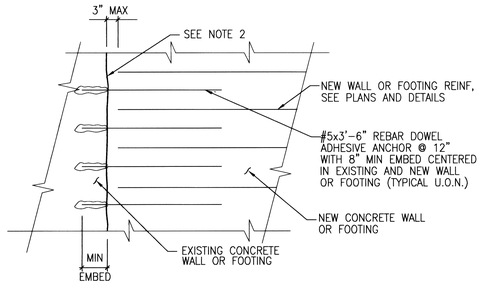

NOTES:

1. FOR NEW CONCRETE WALL OR FOOTING REINFORCEMENT AND DETAILS NOT SHOWN, SEE PLAN.
2. CLEAN & ROUGHEN EXISTING CONCRETE SURFACES ¼" AMPLITUDE TO EXPOSE CLEAN SOUND AGGREGATE AS SPECIFIED. COAT EXISTING CONCRETE WITH BONDING AGENT AS SPECIFIED.

4 NEW CONCRETE TO EXISTING CONCRETE
NTS

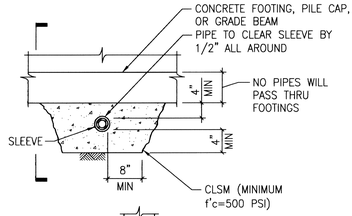

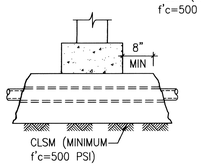

NOTE:
NO PIPE SHALL BE LOCATED WITHIN 2'-0" OF CENTERLINE OF MICROPILE UNLESS SPECIFICALLY DETAILED

PIPE PASSING BELOW FOOTINGS

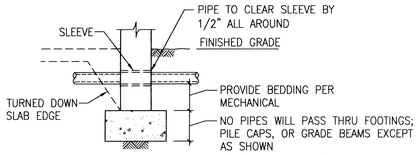

PIPE THRU FOUNDATION STEM WALL OR TURNED-DOWN SLAB EDGE

5 PIPE SLEEVE
NTS

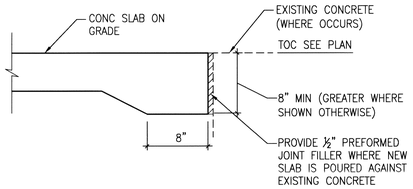

6 THICKENED SLAB EDGE
NTS

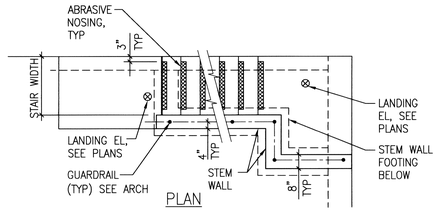

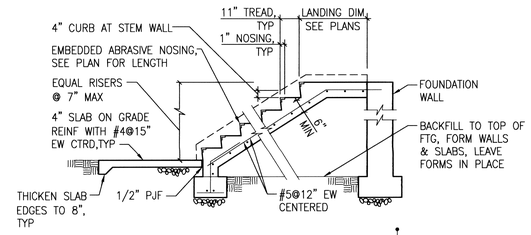

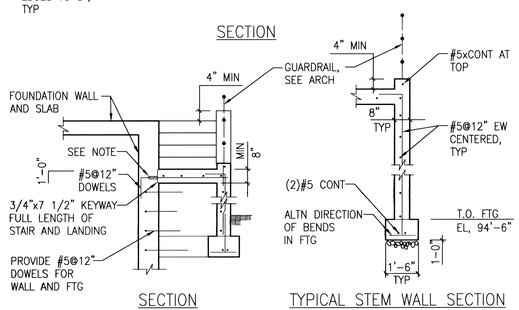

1. COORDINATE STEPS AND LANDING WITH ARCHITECT AND CIVIL.
2. CONTRACTOR'S OPTION TO USE THREADED REINFORCING WITH MECHANICAL THREADED CONNECTORS FOR FORMING.

7 TYPICAL CONCRETE STEPS
NTS

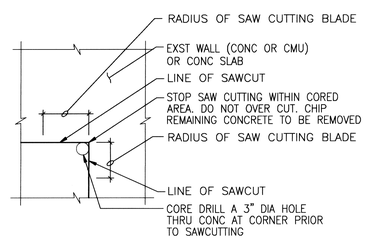

AT CORNERS OF NEW OPENING IN EXST CONC OR CMU

11 TYPICAL SAWCUT
NTS

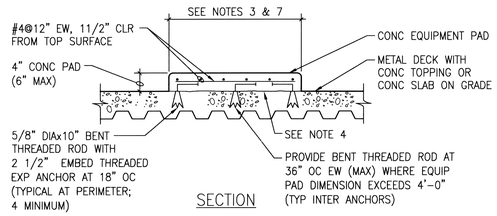

NOTES:

1. CONCRETE SHALL BE NORMAL WEIGHT AND HAVE A MINIMUM 28-DAY COMPRESSIVE STRENGTH OF 3000 PSI.
2. REINFORCING STEEL SHALL CONFORM TO ASTM 615, GRADE 60.
3. PAD SIZES AND LOCATIONS SHOWN ON FRAMING PLANS ARE FOR BID PURPOSES ONLY. COORDINATE PAD SIZE AND LOCATION WITH ARCHITECTURAL, MECHANICAL, AND EQUIPMENT MANUFACTURER.
4. PREPARE EXISTING CONCRETE SURFACE AS SPECIFIED TO RECEIVE NEW CONCRETE.
5. CONCRETE EQUIPMENT PAD SHALL BE INSTALLED LEVEL.
6. AT CONTRACTOR'S OPTION, REBAR DOWEL ADHESIVE ANCHORS MAY BE USED IN LIEU OF BENT ANCHORS.
7. UNLESS OTHERWISE NOTED, CONCRETE EQUIPMENT PAD SHALL EXTEND 6-INCHES BEYOND EXTERIOR FACE OF EQUIPMENT, COORDINATE WITH EQUIPMENT MANUFACTURER.

8 TYPICAL CONCRETE EQUIPMENT PAD
NTS

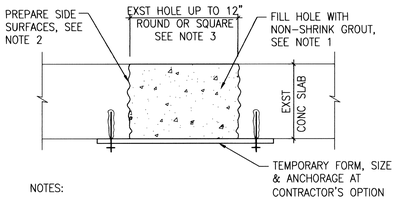

NOTES:

1. NON-SHRINK CEMENT GROUT SHALL BE PRE-MIX PRODUCT CONFORMING TO ASTM C1107, NON-METALLIC. MIX WITH MINIMUM WATER (PLASTIC CONSISTENCY) PER MANUFACTURER'S RECOMMENDATION.
2. ROUGHEN SIDE SURFACES TO ⅛" AMPLITUDE, THOROUGHLY CLEAN AND COAT SURFACE WITH BONDING AGENT PRIOR TO PLACING GROUT.
3. HOLES SMALLER THAN 4" DO NOT REQUIRE ROUGHENING OF SIDE SURFACES. CLEAN AND COAT WITH BONDING AGENT PRIOR TO PLACING GROUT.

9 IN-FILL OF EXISTING SLAB HOLES
NTS

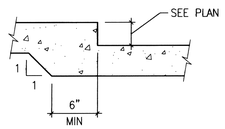

NOTE:
SEE DETAIL 1, DRAWING S3.1 FOR INFORMATION NOT SHOWN

TYPICAL INTERIOR CONDITION

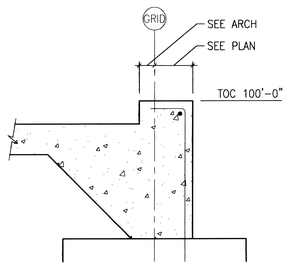

NOTE:
SEE SECTION B, DRAWING S3.3 FOR INFORMATION NOT SHOWN

EDGE OF SLAB CONDITION

10 DEPRESSED SLAB-ON-GRADE
1 1/2"=1'-0"

REVISIONS	DATE

CH2MHILL®
322 EAST FRONT STREET, SUITE 200, BOISE, ID 83702

PROFESSIONAL ENGINEER 7747 STATE OF IDAHO KENT B. SOELBERG

ZGA Architects and Planners, Chartered
565 W. Myrtle Street, Suite 225 Boise, Idaho 83702-7606

CAD FILE NAME: 531-317_S3.1.DWG
XREF FILE NAME: 531-317_xVAbord.DWG

DRAWING TITLE: TYPICAL CONCRETE DETAILS	PROJECT TITLE: REPLACE AND MODERNIZE SURGERY / INTENSIVE CARE UNIT		DATE: 11/01/2011
APPROVED: CHIEF OF FACILITY MANAGEMENT SERVICE	BUILDING NUMBER: 85	CHECKED: KBS	DRAWN: LAH
APPROVED: MEDICAL CENTER DIRECTOR	LOCATION: VAMC BOISE, IDAHO		PROJECT NO.: 531-317
			DRAWING NO.: S3.1
			DWG 62 OF 188

FOR CONSTRUCTION

DEPARTMENT OF VETERANS AFFAIRS

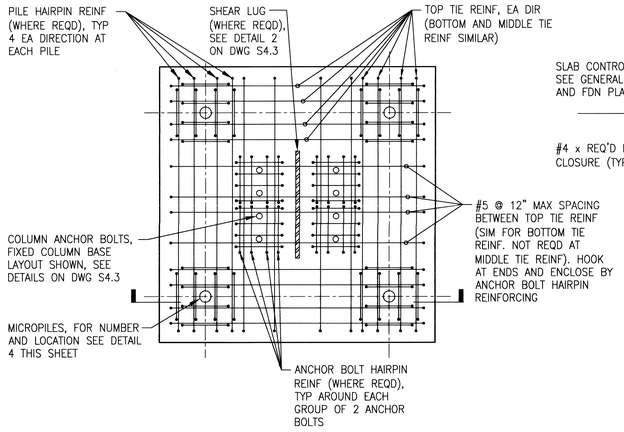

TOP REINFORCING PLAN
(BOTTOM AND MIDDLE SIMILAR)

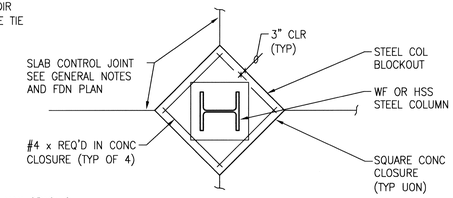

COLUMN AND SLAB JOINT PLAN

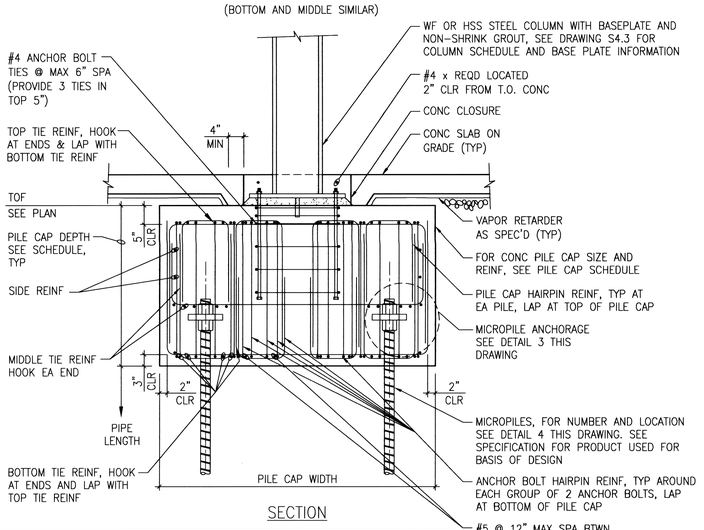

SECTION

CONCRETE PILE CAP SCHEDULE									
MARK	SIZE	DEPTH	BOTTOM TIE REINF (NOTE 2)	TOP TIE REINF (NOTE 2)	MIDDLE TIE REINF (NOTE 2)	SIDE REINF	PILE HAIRPIN REINF (NOTE 4)	ANCHOR BOLT HAIRPIN REINF (NOTE 5)	PILE LENGTH (NOTE 6)
PC1	6'-0"X6'-0"	3'-6"	4 - #6	4 - #8	4 - #6	2 - #5	8 - #4 TYP NOTE 8	8 - #5	30'-0"
PC1A	8'-0"X6'-0"	3'-6"	MIN	MIN	4 - #8	2 - #5	8 - #4	8 - #5	45'-0"
PC1B	6'-0"X6'-0"	3'-6"	MIN	MIN	4 - #7	2 - #5	-	-	30'-0"
PC2	6'-0"X6'-0"	3'-6"	4 - #6	4 - #8	4 - #6	2 - #5	8 - #4	8 - #5	30'-0"
PC2A	6'-0"X6'-0"	3'-6"	4 - #7	4 - #6	4 - #7	2 - #5	8 - #5	8 - #5	45'-0"
PC3	6'-0"X6'-0"	3'-6"	4 - #6	4 - #6	4 - #6	2 - #5	8 - #4	8 - #5	30'-0"
PC3A	6'-0"X6'-0"	3'-6"	MIN	MIN	4 - #8	2 - #5	-	-	30'-0"
PC4	6'-0"X4'-0"	3'-6"	MIN	MIN	4 - #6	2 - #5	-	-	30'-0"
PC5	6'-0"X5'-0"	3'-6"	4 - #6	4 - #6	4 - #6	2 - #5	8 - #4	8 - #5	30'-0"

SCHEDULE NOTES:

1. PLAN AND SECTION SHOWS SPECIAL MOMENT FRAME COLUMN (FIXED BASE) WITH 4 PILE CONFIGURATION. SEE SHEET S4.3 FOR GRAVITY COLUMN (TYPICAL BASE) AND SEE DETAIL 4 THIS SHEET FOR OTHER PILE CONFIGURATIONS.
2. BOTTOM, TOP, AND TIE REINFORCING INDICATED SHALL BE PROVIDED AT EACH PILE IN EACH DIRECTION, AND SHALL BE HOOKED AT ENDS (WITH TOP AND BOTTOM TIES LAPPED VERTICALLY). WHERE SCHEDULE INDICATES "MIN" REINFORCING, PROVIDE #5 SPACED AT A MAXIMUM OF 12", HOOKED AND LAPPED AT ENDS.
3. PIER CAPS AND GRADE BEAMS SHALL BE CENTERED ON COLUMNS UNLESS OTHERWISE NOTED.
4. PILE HAIRPIN REINFORCING REQUIRED ONLY IN PIER CAPS FOR MOMENT FRAME COLUMNS. PROVIDE INDICATED NUMBER OF HAIRPINS AT EACH MICROPILE.
5. ANCHOR BOLT HAIRPIN REINFORCING REQUIRED ONLY IN PIER CAPS SUPPORTING MOMENT FRAME COLUMNS. PROVIDE INDICATED NUMBER OF HAIRPINS AT EACH GROUP OF 2 ANCHOR BOLTS.
6. PILE LENGTH INDICATED IS BASED ON DESIGN BASIS PILE SYSTEM AS SPECIFIED. IF OTHER PILE SYSTEM IS USED, CONTRACTOR SHALL ADJUST PILE LENGTH AS REQUIRED TO ACHIEVE ALLOWABLE LOADS INDICATED ON DRAWING S0.1.
7. REINFORCING USED IN PILE CAPS SUPPORTING SPECIAL MOMENT FRAME COLUMNS SHALL CONFORM TO ASTM A706, GRADE 60.
8. FOR PILE CAP PC1 AT GRID L.1 (OFFSET)/3.8 ONLY, PROVIDE 8-#5 PILE HAIRPIN REINFORCING.

1 TYPICAL PILE CAP
3/4"=1'-0"

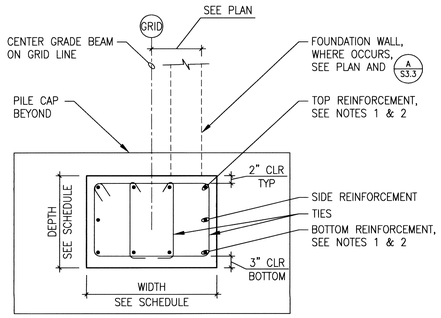

NOTES:

1. TOP AND BOTTOM REINFORCING SHALL CONTINUE THROUGH PILE CAP AND HOOK AT FAR FACE (OR SHALL BE CONTINUOUS THROUGH PILE CAP AND INTO GRADE BEAM ON OPPOSITE SIDE).
2. SPLICE TOP BARS MIDSPAN BETWEEN PILE CAPS AND SPLICE BOTTOM BARS WITHIN PILE CAPS
3. REINFORCING IN GRADE BEAMS CONNECTING PILE CAPS SUPPORTING SPECIAL MOMENT FRAME COLUMNS SHALL CONFORM TO ASTM A706, GRADE 60.

CONCRETE GRADE BEAM SCHEDULE							
MARK	WIDTH	DEPTH	BOTTOM REINF	TOP REINF	SIDE REINF	TIES	DETAIL
GB1	2'-0"	2'-0"	4 - #7	4 - #7	1 - #5 EA FACE	#4 @ 18"	2/S3.2
GB2	2'-10"	2'-0"	5 - #7	5 - #7	1 - #5 EA FACE	#4 @ 18"	2/S3.2
GB3	2'-10"	2'-0"	5 - #7	5 - #7	1 - #5 EA FACE	#4 @ 18"	2/S3.2
GB4	3'-10"	2'-0"	6 - #7	6 - #7	1 - #5 EA FACE	#4 @ 18"	2/S3.2

2 TYPICAL GRADE BEAM
3/4"=1'-0"

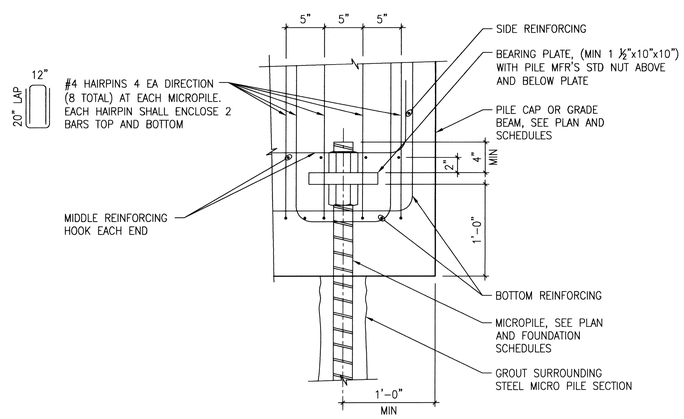

3 MICROPILE ANCHORAGE
1 1/2"=1'-0"

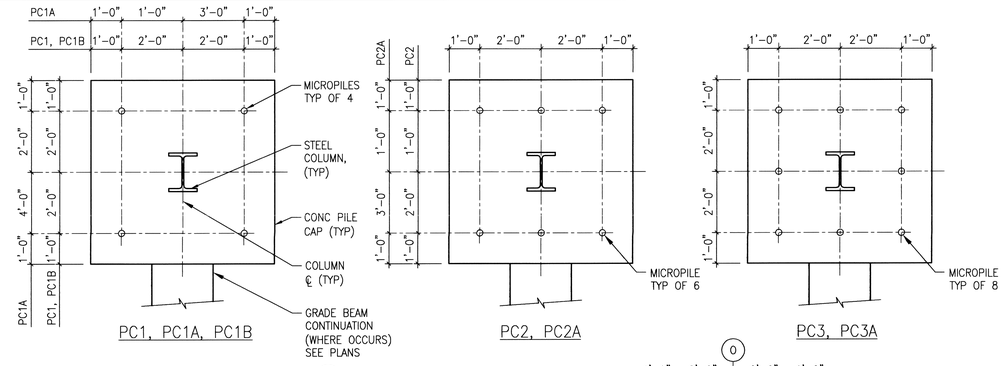

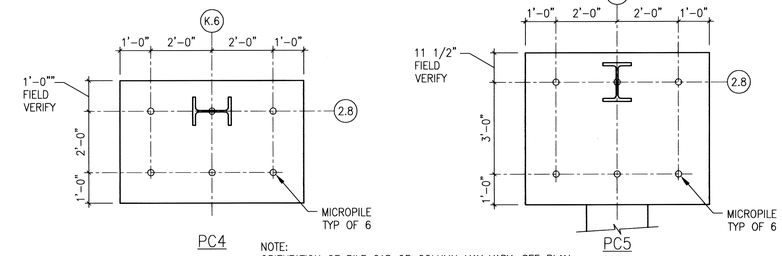

NOTE:
ORIENTATION OF PILE CAP OR COLUMN MAY VARY. SEE PLAN.

4 PILE CAP DIMENSIONS
1/2" = 1'-0"

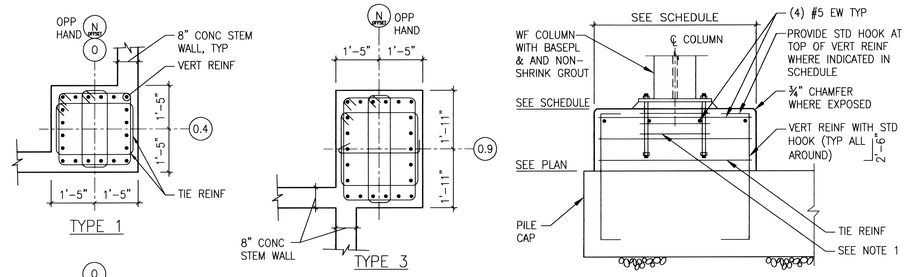

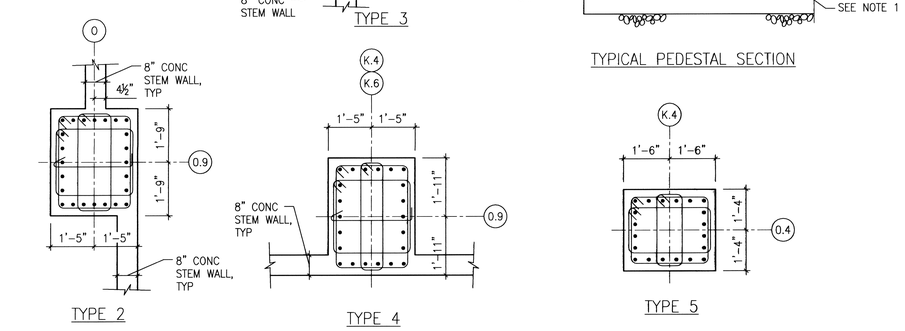

CONCRETE PEDESTAL SCHEDULE					
PEDESTAL LOCATION	0.4/O, 0.4/N(offset)	0.9/O	0.9/N(offset)	0.9/K.4, 0.9/K.6	0.4/K.4
SIZE	2'-10" x 2'-10"	3'-6" x 2'-10"	3'-10" x 2'-10"	3'-10" x 2'-10"	3'-0" x 2'-8"
VERT REINF	20-#7	24-#7	22-#8	22-#8	20-#7
TIE REINF	#4@10"	#4@10"	#4@10"	#4@10"	#4@10"
TOP OF PEDESTAL ELEV	99'-0"	99'-0"	99'-0"	99'-0"	100'-0"
TOP OF CAP ELEV	96'-0"	95'-0"	95'-0"	95'-0"	95'-0"
TYPE	1	2	3	4	5
COMMENTS	NOTES 1, 2	NOTES 1, 2	NOTE 1	NOTE 1 (TYP), NOTE 2 (GRID 0.9/K.6 ONLY)	NOTES 1, 2

NOTES:

1. PROVIDE 3-#3 TIES AROUND COLUMN ANCHOR BOLTS IN TOP 5" OF PEDESTAL.
2. PROVIDE STANDARD 90 DEGREE ACI HOOKS AT TOP OF VERTICAL REINFORCING.
3. REINFORCING USED IN CONCRETE PEDESTALS SUPPORTING SPECIAL MOMENT FRAME COLUMNS SHALL CONFORM TO ASTM A706, GRADE 60.

5 CONCRETE PEDESTALS
1/2" = 1'-0"

REVISIONS | DATE

CH2MHILL®
322 EAST FRONT STREET, SUITE 200, BOISE, ID 83702

PROFESSIONAL ENGINEER 17747 11-1-11 STATE OF IDAHO KENT B. SOELBERG

ZGA. Architects and Planners, Chartered
565 W. Myrtle Street, Suite 225 Boise, Idaho 83702-7606

CAD FILE NAME: 531-317_S3.2.DWG
XREF FILE NAME: 531-317_xVAbord.DWG

DRAWING TITLE: CONCRETE SECTIONS AND DETAILS
PROJECT TITLE: REPLACE AND MODERNIZE SURGERY / INTENSIVE CARE UNIT
DATE: 11/01/2011
PROJECT NO. 531-317
APPROVED: CHIEF OF FACILITY MANAGEMENT SERVICE
BUILDING NUMBER 85 | CHECKED KBS | DRAWN LAH
DRAWING NO. S3.2
APPROVED: MEDICAL CENTER DIRECTOR
LOCATION VAMC BOISE, IDAHO
DWG 63 OF 188

FOR CONSTRUCTION
DEPARTMENT OF VETERANS AFFAIRS

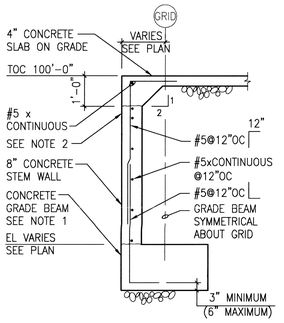

A SECTION 1/2"=1'-0"

NOTES:

1. SEE GRADE BEAM SCHEDULE FOR SIZES AND REINFORCING
2. WHERE HEIGHT OF CONCRETE STEM WALL EXCEEDS 3'-6", BRACE TOP OF WALL PRIOR TO BACKFILLING BEHIND WALL AND LEAVE BRACES IN PLACE UNTIL CONCRETE SLAB HAS BEEN PLACED AND CURED FOR A MINIMUM OF 7 DAYS.

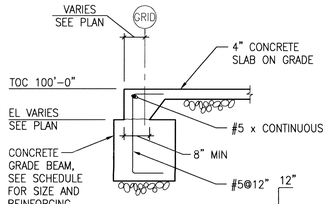

B SECTION 1/2"=1'-0"

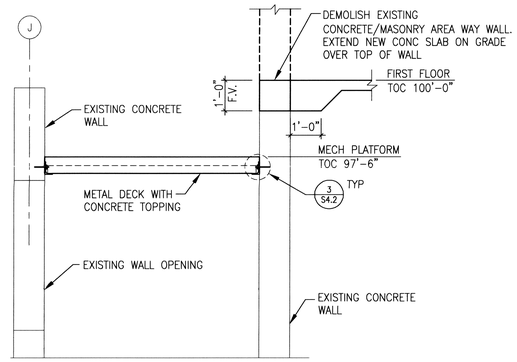

E SECTION 1/2"=1'-0"

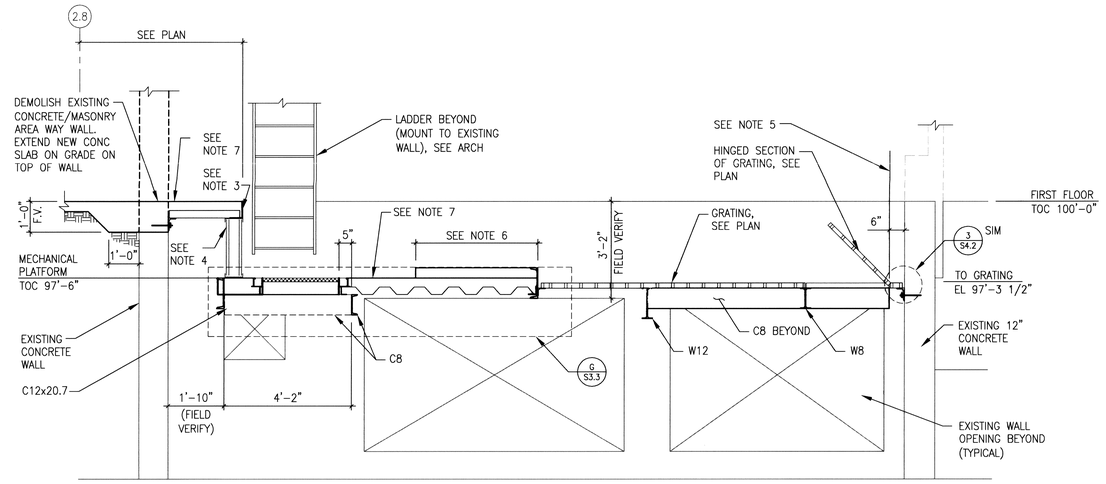

NOTES:

1. FOR BEAM TO BEAM CONNECTION SEE DETAIL 1/S4.1
2. FOR BEAM TO CONCRETE WALL CONNECTIONS SEE DETAIL 5 ON DRAWING S5.2.
3. L8x4x½ (LLV) SPANNING FULL WIDTH OF AREAWAY. ATTACH TO CONCRETE PER DETAIL 5 ON DRAWING S5.2.
4. METAL STUD INFILL, SEE ARCHITECTURAL.
5. HINGE POINT FOR GRATING. SEE PLAN.
6. CONCRETE EQUIPMENT PAD. SEE PLAN, DRAWING S2.1, AND DETAIL 8, DRAWING S3.1.
7. DECK TYPE 1 SEE SCHEDULE ON DRAWING S4.5.

F SECTION 1/2"=1'-0"

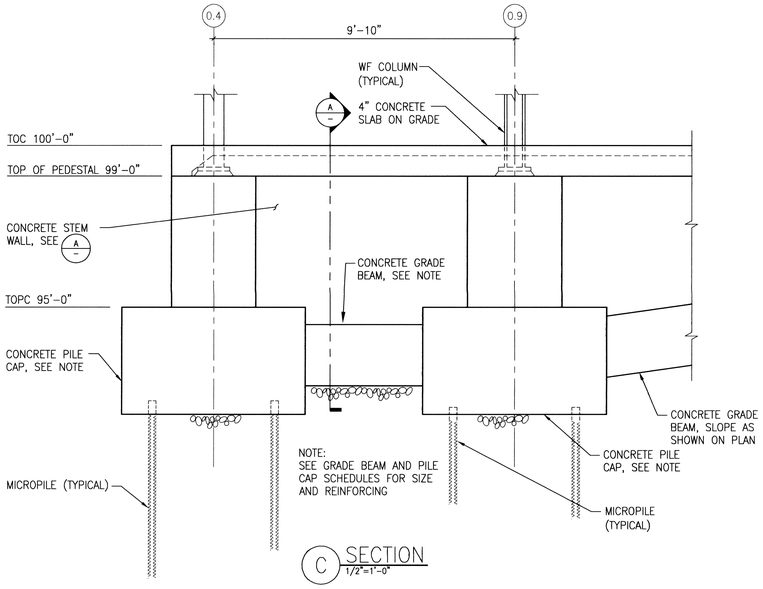

C SECTION 1/2"=1'-0"

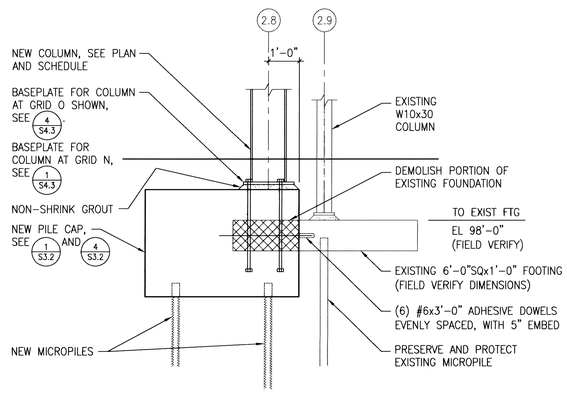

SECTION 1/2"=1'-0"

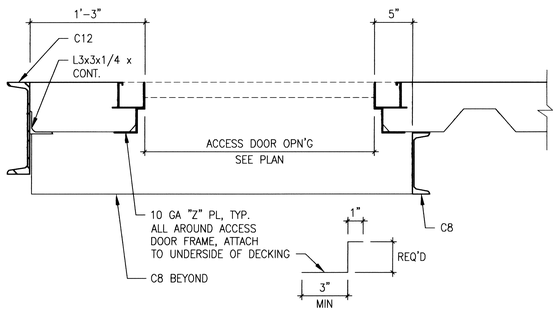

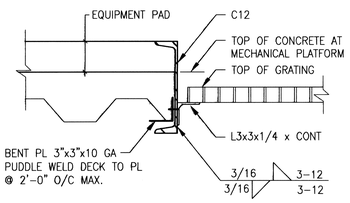

G SECTION 1 1/2"=1'-0"

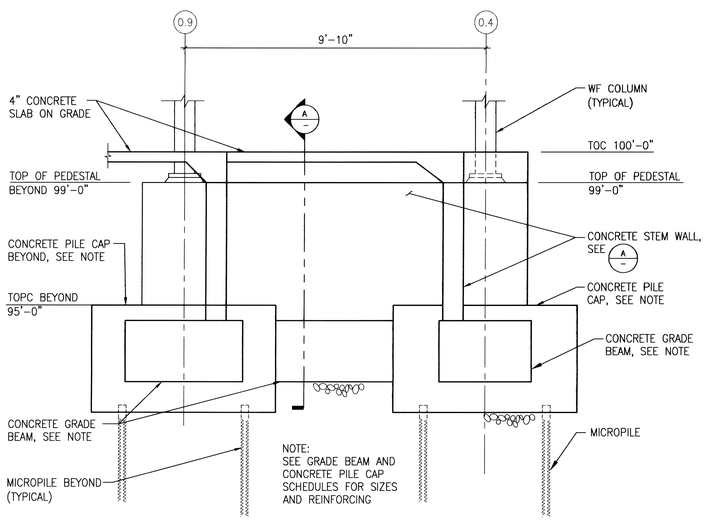

D SECTION 1/2"=1'-0"

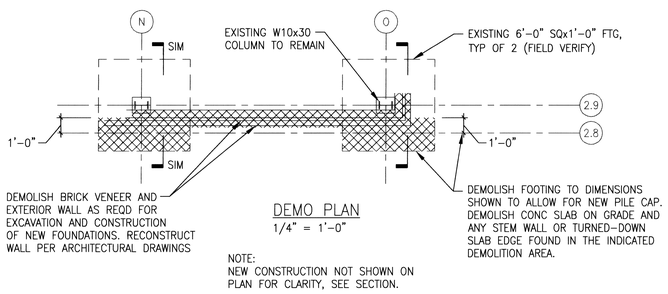

DEMO PLAN
1/4" = 1'-0"

NOTE:
NEW CONSTRUCTION NOT SHOWN ON PLAN FOR CLARITY, SEE SECTION.

1 NEW/EXISTING FOUNDATION DETAIL
AS INDICATED

REVISIONS	DATE

CH2MHILL®
322 EAST FRONT STREET, SUITE 200, BOISE, ID 83702

PROFESSIONAL ENGINEER 7747 STATE OF IDAHO KENT B. SOELBERG 11-1-11

ZSA. Architects and Planners, Chartered
565 W. Myrtle Street, Suite 225 Boise, Idaho 83702-7606

CAD FILE NAME: 531-317_S3.3.DWG
XREF FILE NAME: 531-317_xVAbord.DWG

DRAWING TITLE: CONCRETE SECTIONS AND DETAILS

APPROVED: CHIEF OF FACILITY MANAGEMENT SERVICE

APPROVED: MEDICAL CENTER DIRECTOR

PROJECT TITLE: REPLACE AND MODERNIZE SURGERY / INTENSIVE CARE UNIT

BUILDING NUMBER: 85 | CHECKED: KBS | DRAWN: LAH

LOCATION: VAMC BOISE, IDAHO

DATE: 11/01/2011
PROJECT NO. 531-317
DRAWING NO. S3.3
DWG 64 OF 188

FOR CONSTRUCTION
DEPARTMENT OF VETERANS AFFAIRS

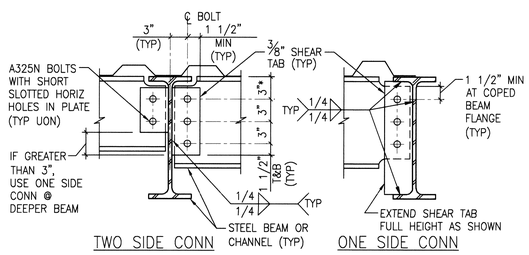

TWO SIDE CONN ONE SIDE CONN

TYP BEAM CONNECTION SCHEDULE				
NOMINAL BEAM DEPTH, INCHES	ROWS OF BOLTS	BOLT DIA	BOLT TYPE	LENGTH OF SHEAR TAB
30–40	9	7/8"	A325N	2'–3"
27	8	7/8"	A325N	2'–0"
24	7	3/4"	A325N	1'–9"
21	6	3/4"	A325N	1'–6"
18	5	3/4"	A325N	1'–3"
16	4	3/4"	A325N	1'–0"
12–15	3	3/4"	A325N	9"
8–10	2	3/4"	A325N	6"

NOTES:

1. NUMBER OF ROWS IS EQUAL TO NUMBER OF BOLTS CONNECTING SHEAR TAB PLATE TO BEAM.
2. FOR SKEWED SINGLE PLATE SHEAR TAB CONNECTION TO WIDE FLANGE BEAM, SEE DETAIL 2, DRAWING S4.2
3. AT ONE–SIDE CONNECTIONS, OR WHERE NOTED ABOVE, PROVIDE SHEAR TAB PLATE FULL HEIGHT OF BEAM AS SHOWN.
4. (*) INDICATES 3" DIMENSION IS TYPICAL EXCEPT AS RECOMMENDED BY AISC FOR LARGER MEMBERS.

1 TYPICAL BEAM TO BEAM CONNECTION
NTS

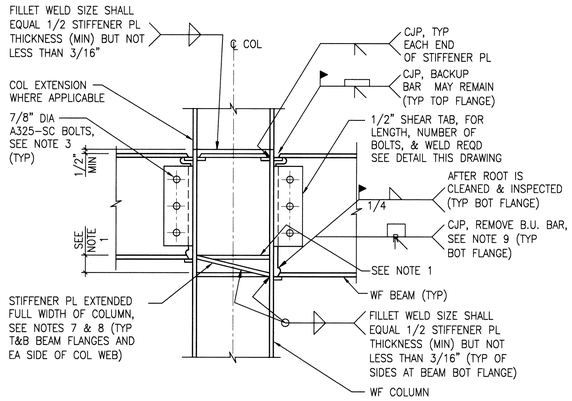

MOMENT CONN AT COLUMN FLANGE

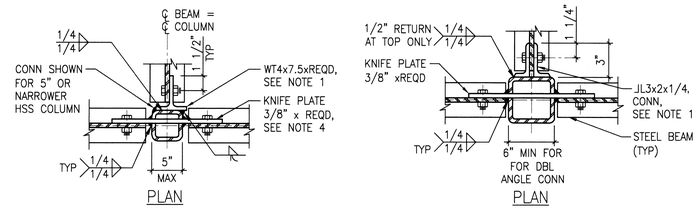

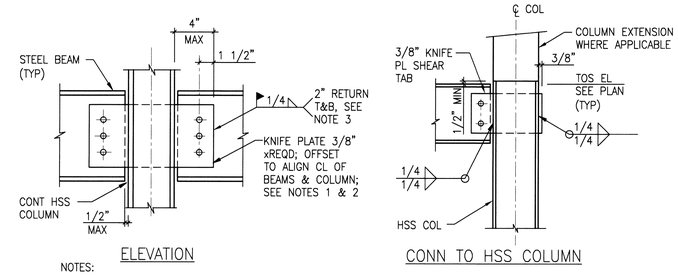

NOTES:

1. FOR LENGTH REQUIRED AND FOR SIZE, NUMBER, AND SPACING OF BOLTS, SEE DETAILS 1 AND 2, THIS DRAWING (SIMILAR).
2. FOR ONE–SIDED BEAM CONNECTIONS, KNIFE PLATE SHALL BE EXTENDED 3/8 – INCH BEYOND OUTSIDE FACE OF COLUMN.
3. UNLESS OTHERWISE NOTED, BEAM CONNECTIONS SHALL BE BOLTED AS SHOWN. FIELD WELDED CONNECTION MAY BE USED IN LIEU OF BOLTED CONNECTION WHERE SHOWN ON THE PLANS OR AT SPECIFIC LOCATIONS WHEN APPROVED BY THE ENGINEER.
4. KNIFE PLATE SHALL BE LOCATED IN DIRECTION OF DEEPEST CONNECTING BEAM OR LONGEST SPAN BEAM WHEN MEMBER SIZES ARE THE SAME DEPTH.

4 TYPICAL BEAM CONNECTION AT HSS COLUMN
NTS

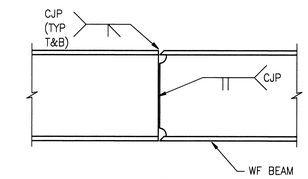

ELEVATION

NOTE:
FIELD WELDS MAY BE USED IN LIEU OF SHOP WELDING AS REQD TO FACILITATE CONSTRUCTION.

7 TYPICAL BEAM MOMENT SPLICE CONNECTION
NTS

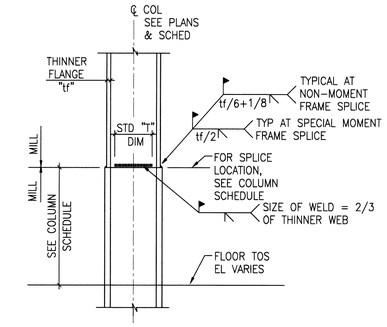

ELEVATION

NOTE:
PROVIDE ERECTION PLATES AS REQUIRED

8 TYPICAL COLUMN SPLICE
NTS

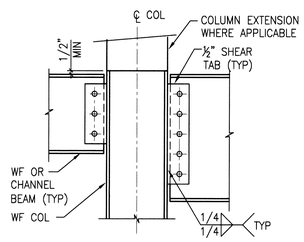

CONN TO WF COLUMN FLANGE

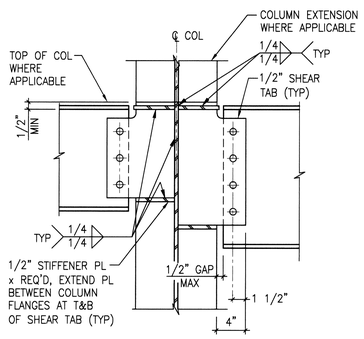

CONN TO WF COLUMN WEB

NOTES

1. FOR BOLTED SHEAR TAB CONNECTION AND DETAILS NOT SHOWN, SEE DETAIL 1 THIS DWG (TYPICAL UNLESS OTHERWISE NOTED).
2. ALIGN CENTERLINE OF BEAM WITH CENTERLINE OF COLUMN.

2 TYPICAL BEAM TO COLUMN CONNECTIONS
NTS (ONE OR TWO SIDED CONNECTION)

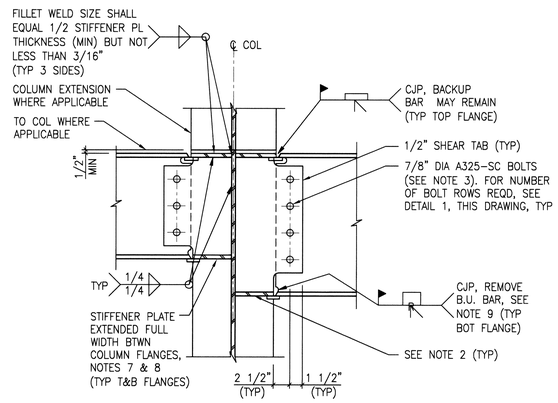

MOMENT CONN AT COLUMN WEB

NOTES:

1. PROVIDE HORIZONTAL STIFFENER PLATES AT BOTH BEAM BOTTOM FLANGES WHERE VERTICAL OFFSET IS GREATER THAN 3".
2. STIFFENER PLATES SHALL BE SLOPED AS REQUIRED TO MATCH SLOPING BEAMS WHERE REQUIRED.
3. THE BOLTED JOINT OF THIS CONNECTION IS SLIP–CRITICAL. INSTALL AND TIGHTEN BOLT ASSEMBLIES AS SPECIFIED FOR SLIP CRITICAL JOINTS.
4. ALIGN CENTERLINE OF BEAM WITH CENTERLINE OF COLUMN (TYPICAL UNLESS OTHERWIDE NOTED).
5. DETAIL IS NOT APPLICABLE TO SPECIAL MOMENT FRAMES SHOWN ON S4.6. USE DETAIL 1/S4.6 FOR ALL CONNECTIONS IN SPECIAL MOMENT FRAMES.
6. SLOTTED HOLES NOT PERMITTED IN MOMENT CONNECTIONS (TYPICAL).
7. TOP STIFFENER PLATE SHALL MATCH LARGEST BEAM FLANGE THICKNESS + 1/8" MINIMUM (TYPICAL).
8. BOTTOM STIFFENER PLATE SHALL MATCH LARGEST BEAM FLANGE THICKNESS + 1/4" MINIMUM (TYPICAL).
9. BACKUP BAR WELDS SHALL BE GROUND FLAT AND SMOOTH TO BASE METAL AFTER REMOVAL.

3 BEAM TO COLUMN MOMENT CONNECTIONS
NTS (ONE OR TWO SIDED CONNECTION)

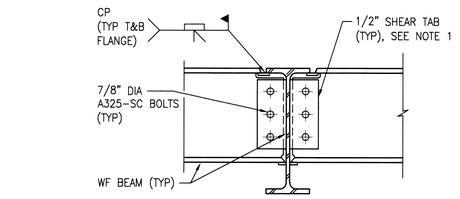

NOTES:

1. FOR SHEAR TAB DIMENSIONS & DETAILS NOT SHOWN, SEE DETAIL 1 THIS DRAWING (TYPICAL UNLESS OTHERWISE NOTED)
2. THE BOLTED JOINT OF THIS CONNECTION IS SLIP–CRITICAL. INSTALL AND TIGHTEN BOLT ASSEMBLIES AS SPECIFIED FOR SLIP CRITICAL JOINTS.

5 TYPICAL BEAM TO BEAM MOMENT CONNECTION
NTS

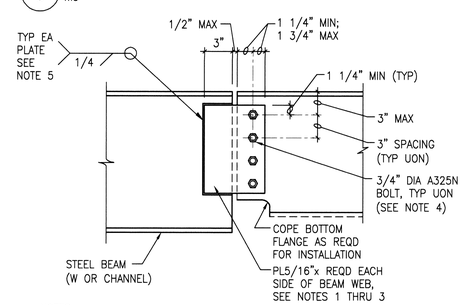

NOTES:

1. BOLTED BEAM END CONNECTION SHALL BE LOCATED AT END OF BEAM WITH THINNER BEAM WEB THICKNESS.
2. PROVIDE SHIM PLATES AS REQUIRED UNDER BOLTED CONNECTION SIDE ONLY.
3. LENGTH OF PLATE AND NUMBER OF BOLTS SHALL MATCH TYPICAL BEAM CONNECTION FOR DEPTH OF SMALLER BEAM, SEE DETAIL 1/S4.1 (SIMILAR).
4. WELDED BEAM END CONNECTION MAY BE USED IN LIEU OF BOLTED CONNECTION WHEN APPROVED BY THE CONTRACTING OFFICER.
5. BOLTED BEAM END CONNECTION MAY BE USED IN LIEU OF WELDED CONNECTION WHEN APPROVED BY THE ENGINEER CONTRACTING OFFICER.

6 TYPICAL BEAM SHEAR SPLICE CONNECTION
NTS

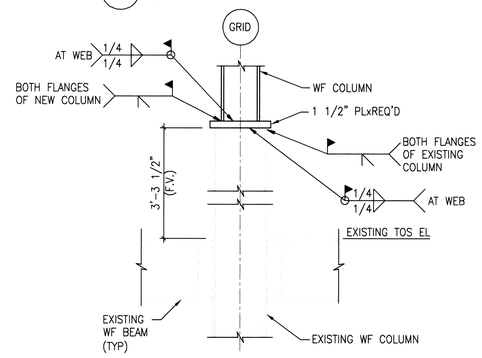

NOTE:
EXISTING METAL DECK WITH CONC TOPPING NOT SHOWN

9 SPLICE AT EXISTING GRAVITY COLUMN
NTS

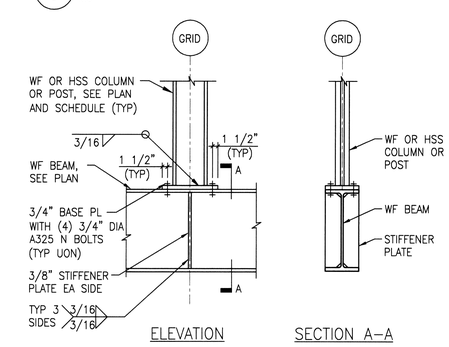

10 TYPICAL WF COLUMN TRANSFER GIRDER
NTS

REVISIONS	DATE

CH2MHILL®
322 EAST FRONT STREET, SUITE 200, BOISE, ID 83702

PROFESSIONAL ENGINEER LICENSE 7747 11-1-11 STATE OF IDAHO KENT B. SOELBERG

Architects and Planners, Chartered
565 W. Myrtle Street, Suite 225 Boise, Idaho 83702-7606

CAD FILE NAME: 531–317_S4.1.DWG
XREF FILE NAME: 531–317_xVAbord.DWG

DRAWING TITLE: TYPICAL STEEL DETAILS

PROJECT TITLE: REPLACE AND MODERNIZE SURGERY / INTENSIVE CARE UNIT

DATE: 11/01/2011
PROJECT NO. 531–317

APPROVED: CHIEF OF FACILITY MANAGEMENT SERVICE
APPROVED: MEDICAL CENTER DIRECTOR

BUILDING NUMBER: 85
CHECKED: KBS
DRAWN: LAH

LOCATION: VAMC BOISE, IDAHO

DRAWING NO. S4.1
DWG 65 OF 188

FOR CONSTRUCTION
DEPARTMENT OF VETERANS AFFAIRS

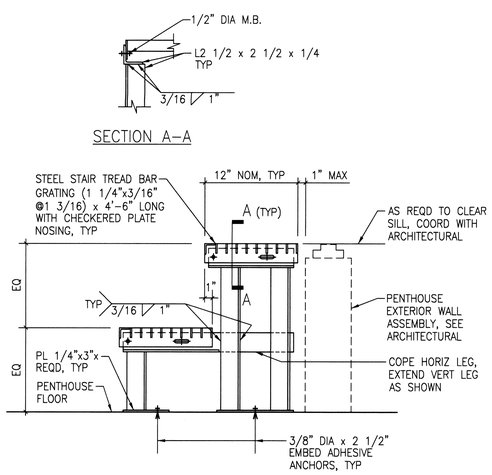

1 PENTHOUSE ACCESS STAIR
1 1/2"=1'–0"

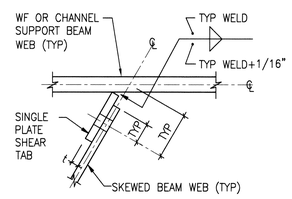

FOR SKEWS UP TO 30 DEGREES

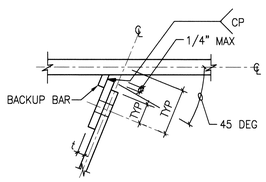

FOR SKEWS OVER 30 TO 45 DEGREES

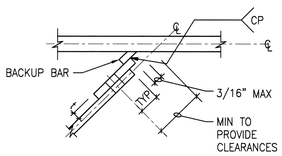

FOR SKEWS OVER 45 TO 60 DEGREES

NOTES:

1. FOR SINGLE PLATE SHEAR TAB CONNECTION DETAILS NOT SHOWN, SEE DETAIL 1, DRAWING S4.1.

2 TYPICAL SKEWED CONNECTION
NTS

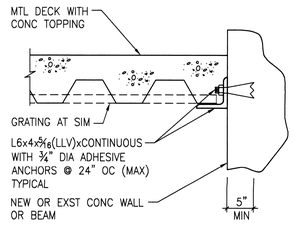

SECTION

NOTE:
METAL DECK ORIENTATION VARIES, SEE PLAN

3 TYPICAL LEDGER ANGLE SUPPORT
NTS

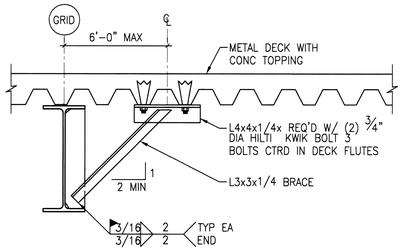

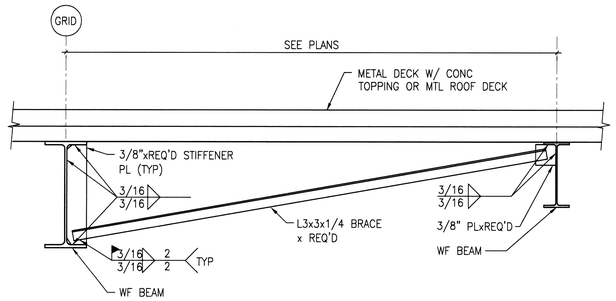

4 TYPICAL BRACING ANGLE
NTS

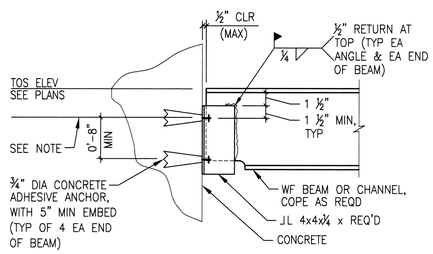

NOTE:
LOCATE TOP ANCHOR NO LESS THAN 6" FROM TOP EDGE OF CONCRETE. EXTEND DOUBLE ANGLES AS REQUIRED.

5 STEEL BEAM TO CONCRETE CONNECTION
NTS

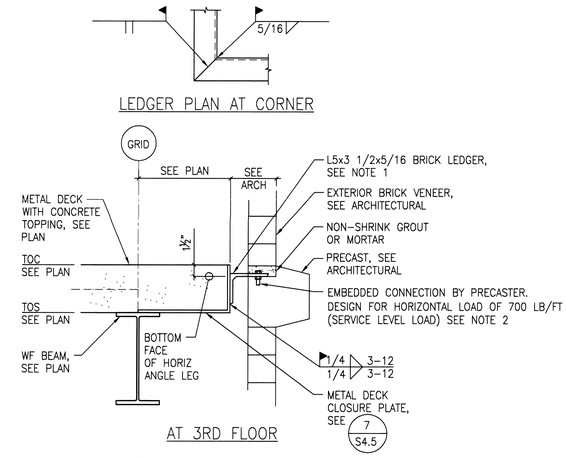

NOTES:

1. NO BRICK LEDGER REQUIRED AT PENTHOUSE FLOOR/ROOF LEVEL.
2. CONTRACTOR SHALL COORDINATE BETWEEN PRECASTER AND METAL FABRICATOR FOR PROPER ALIGNMENT OF CONNECTION AND BOLT HOLES IN LEDGER ANGLE.

6 TYPICAL BRICK LEDGER
1 1/2"=1'–0"

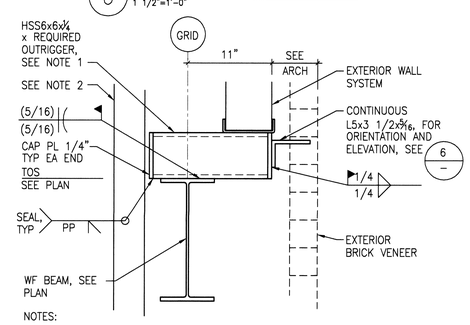

NOTES:

1. HSS 6x6 OUTRIGGERS SHALL BE SPACED AT 2'–0" OC (MAXIMUM); OUTRIGGER SHALL BE PLACED WITHIN 6" (MAXIMUM) OF MOMENT FRAME BEAM PROTECTED ZONE.
2. INTERIOR WALL SYSTEM SUPPORTED FROM INTERMEDIATE STAIR LANDING, SEE ARCHITECTURAL.

7 BRICK LEDGER AT STAIR OPENING
1 1/2"=1'–0"

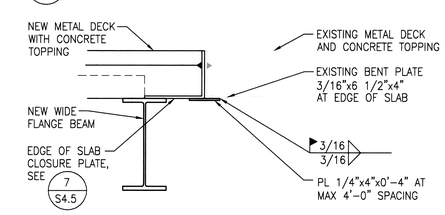

8 DRAG CONNECTOR AT EXISTING SLAB
1 1/2"=1'–0"

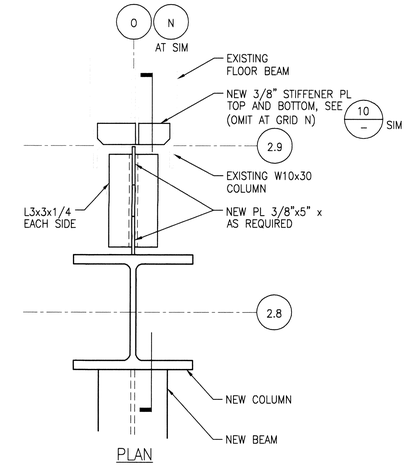

PLAN

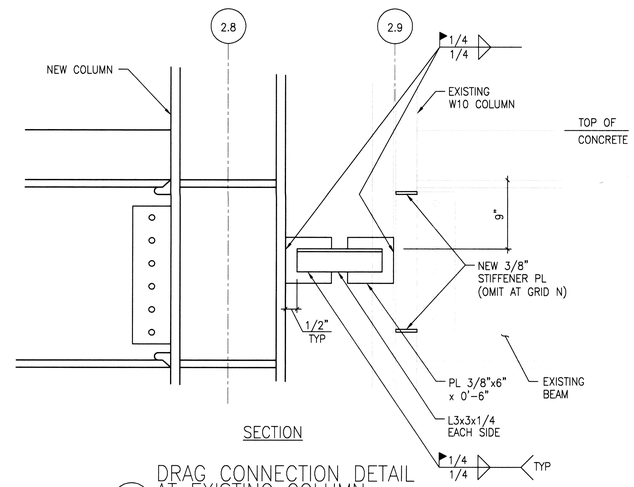

SECTION

9 DRAG CONNECTION DETAIL AT EXISTING COLUMN
1 1/2"=1'–0"

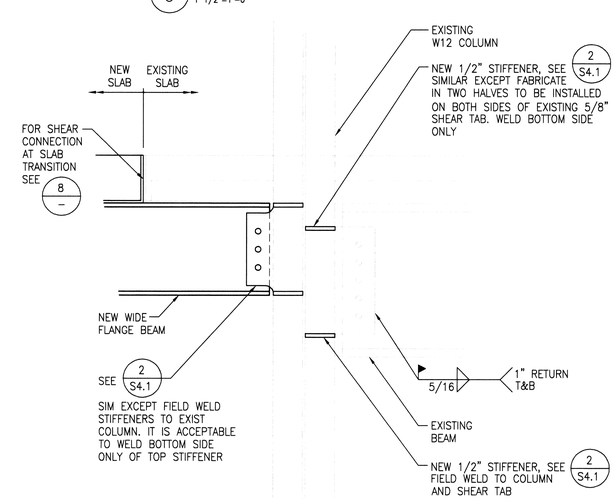

10 CONNECTION DETAIL
1 1/2"=1'–0"

REVISIONS	DATE

CH2MHILL®
322 EAST FRONT STREET, SUITE 200, BOISE, ID 83702

PROFESSIONAL ENGINEER 7747 STATE OF IDAHO KENT B. SOELBERG 11-1-11

Architects and Planners, Chartered
565 W. Myrtle Street, Suite 225 Boise, Idaho 83702-7606

CAD FILE NAME: 531–317_S4.2.DWG
XREF FILE NAME: 531–317_xVAbord.DWG

DRAWING TITLE: TYPICAL STRUCTURAL DETAILS

PROJECT TITLE: REPLACE AND MODERNIZE SURGERY / INTENSIVE CARE UNIT

DATE: 11/01/2011
PROJECT NO. 531–317

APPROVED: CHIEF OF FACILITY MANAGEMENT SERVICE
APPROVED: MEDICAL CENTER DIRECTOR

BUILDING NUMBER 85 | CHECKED KBS | DRAWN LAH

LOCATION: VAMC BOISE, IDAHO

DRAWING NO. S4.2
DWG 66 OF 188

FOR CONSTRUCTION
DEPARTMENT OF VETERANS AFFAIRS

STEEL COLUMN SCHEDULE

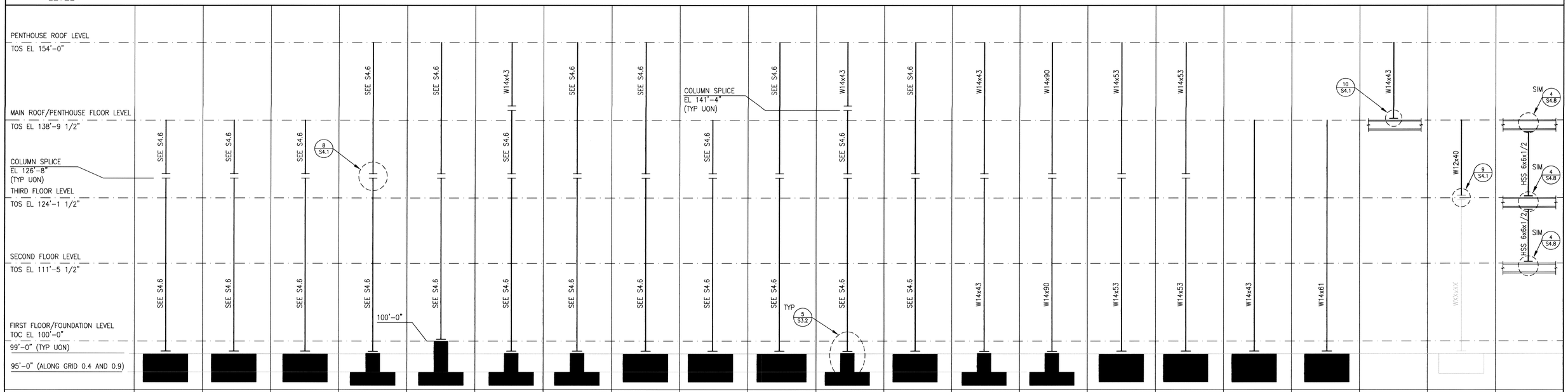

GRID LOCATION	3.8/L.1 (OFFSET)	3.8/K.6 (OFFSET)	3.8/J.9	0.4/N (OFFSET)	0.4/K.4	0.4/O	0.9/K.6	1.9/K.6	2.9/K.6	2.8/O	0.9/O	1.9/O	0.9/N (OFFSET)	0.9/K.4	2.8/N	1.9/N	2.9 (OFFSET)/J.9	2 (OFFSET)/J.9	0.4/J.9, 1.9/J.9, 2.8/J.9, 2.8 (OFFSET)/K.6	4.2/O, 4.2/N, 4.2/L.1, 4.2/K.2, 4.2/J.7, 7/O, 7/N, 7/N.1, 7/K.4, 7/J.7	0.9/J.1
BASEPLATE TYPE	FIXED	FIXED	FIXED	FIXED	FIXED	FIXED	FIXED	FIXED	FIXED	FIXED	FIXED	FIXED	TYPICAL	TYPICAL	TYPICAL	TYPICAL	TYPICAL	TYPICAL	–	–	–
BASEPLATE SIZE	29" x 2'-5"	29" x 2'-5"	29" x 2'-5"	29" x 2'-5"	29" x 2'-5"	29" x 2'-5"	29" x 2'-5"	29" x 2'-5"	29" x 2'-5"	29" x 1'-4"	29" x 2'-5"	29" x 2'-5"	SEE 1/S4.3	SEE 1/S4.3	SEE 1/S4.3	SEE 1/S4.3	SEE 1/S4.3	SEE 1/S4.3	–	–	–
MINIMUM BASEPLATE THICKNESS	2¾"	2¾"	2¾"	2¾"	2¾"	2¾"	2¾"	2¾"	2¾"	2¾"	2¾"	2¾"	1"	2"	1"	1"	1"	1"	–	–	–
ANCHOR BOLT NUMBER	8	8	8	8	8	8	8	8	8	8	8	8	4	4	4	4	4	4	–	–	–
ANCHOR BOLT DIAMETER	2"	2"	2"	2"	2"	2"	2"	2"	2"	2"	2"	2"	1"	1"	1"	1"	1"	1"	–	–	–
ANCHOR BOLT EMBED LENGTH	2'-0"	2'-0"	2'-0"	2'-0"	2'-0"	2'-0"	2'-0"	2'-0"	2'-0"	2'-0"	2'-0"	2'-0"	1'-6"	1'-6"	1'-6"	1'-6"	1'-6"	1'-6"	–	–	–
CONCRETE PEDESTAL TYPE SEE DETAIL 5, DRAWING S3.2	–	–	–	1	5	1	4	–	–	–	2	–	3	4	–	–	–	–	–	–	–

STEEL COLUMN SCHEDULE NOTES:

1. FOR TYPICAL COLUMN BASEPLATE DETAILS, SEE DETAILS 1 AND 2 ON THIS DRAWING.
2. LENGTHS SHOWN FOR ANCHOR BOLTS ARE EMBEDDED LENGTHS IN CONCRETE. ADD LENGTH FOR GROUT, LEVELING NUTS, PLATE THICKNESS, AND BOLT PROJECTION ABOVE PLATE AS REQUIRED (5" MINIMUM), TYPICAL.
3. PROVIDE ½" CAP PLATE AT TOP OF COLUMNS (TYPICAL UNLESS NOTED OTHERWISE).

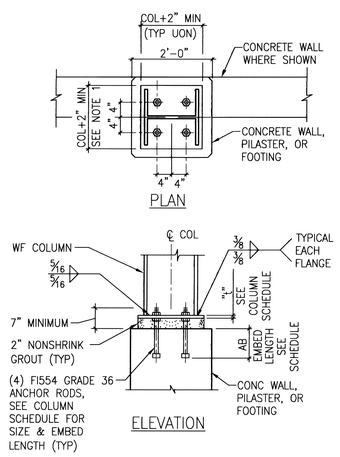

NOTES:

1. PROVIDE MIN EDGE DISTANCE OF 2" FROM CENTERLINE ANCHOR ROD TO EDGE OF BASE PLATE.

1 TYPICAL WF COLUMN BASE
NTS

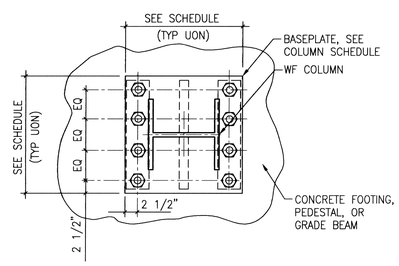

2 FIXED COLUMN BASE
NTS

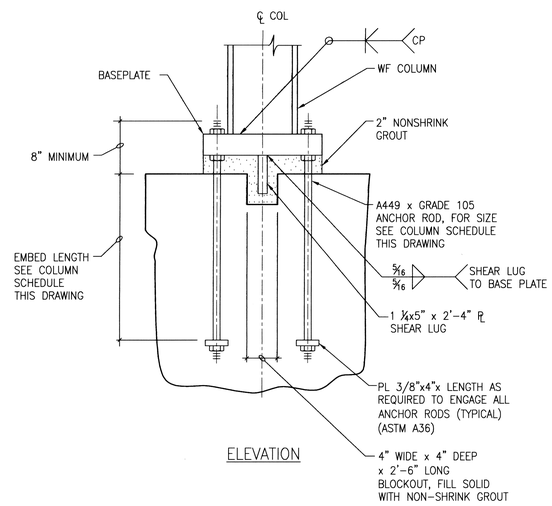

3 NOT USED
NTS

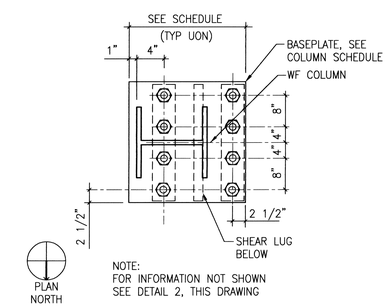

NOTE:
FOR INFORMATION NOT SHOWN SEE DETAIL 2, THIS DRAWING

4 FIXED COLUMN BASE AT GRID 2.8/O
NTS

REVISIONS | DATE

CH2MHILL®
322 EAST FRONT STREET, SUITE 200, BOISE, ID 83702

PROFESSIONAL ENGINEER 7747 11-1-11 STATE OF IDAHO KERRY B. SOELBERG

ZGA. Architects and Planners, Chartered
565 W. Myrtle Street, Suite 225 Boise, Idaho 83702-7606

CAD FILE NAME: 531-317_4.3.DWG
XREF FILE NAME: 531-317_xVAbord.DWG

DRAWING TITLE: STEEL COLUMN SCHEDULE AND DETAILS
PROJECT TITLE: REPLACE AND MODERNIZE SURGERY / INTENSIVE CARE UNIT
DATE: 11/01/2011
PROJECT NO. 531-317
APPROVED: CHIEF OF FACILITY MANAGEMENT SERVICE
BUILDING NUMBER 85 | CHECKED KBS | DRAWN LAH
DRAWING NO. S4.3
APPROVED: MEDICAL CENTER DIRECTOR
LOCATION VAMC BOISE, IDAHO
DWG 67 OF 188

FOR CONSTRUCTION
DEPARTMENT OF VETERANS AFFAIRS

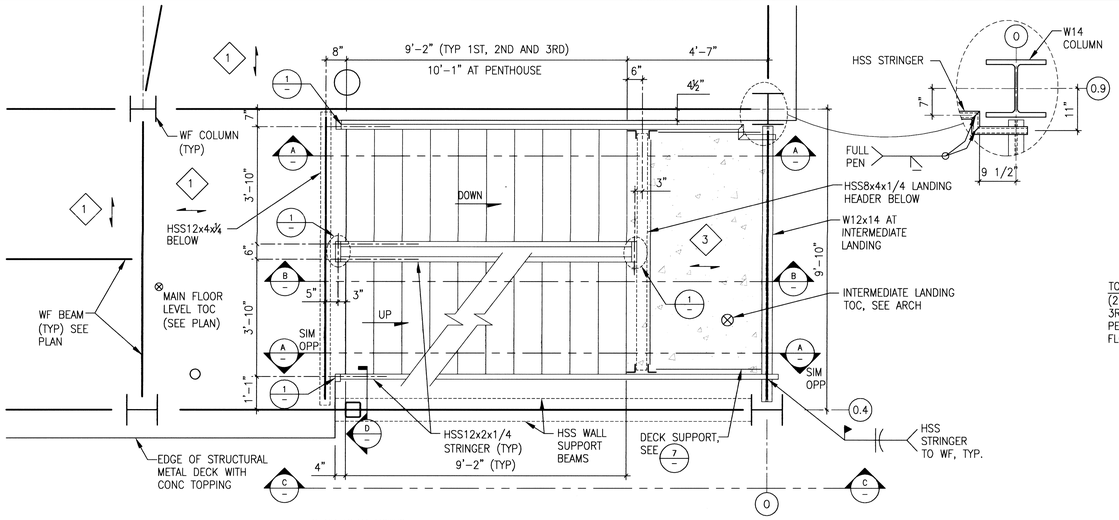

STAIR PLAN NOTES:

1. FOR GENERAL STRUCTURAL NOTES & ABBREVIATIONS, SEE SHEETS S0.1 & S0.2.
2. ALL DIMENSIONS SHOWN ARE TYPICAL; COORDINATE ALL REQUIRED DIMENSIONS WITH ARCHITECTURAL.
3. ALL DIMENSIONS ARE TO CENTERLINE OF MEMBER FOR TYPICAL STEEL FRAMING CONNECTIONS SEE SHEET S4.1. HANDRAIL NOT SHOWN. COORDINATE WITH ARCHITECTURAL.
4. GRIND SMOOTH ALL EXPOSED WELDS.
5. CAP AND SEAL WELD THE ENDS OF ALL EXPOSED HSS MEMBERS.

TYPICAL STAIR FRAMING PLAN
1/2"=1'-0"

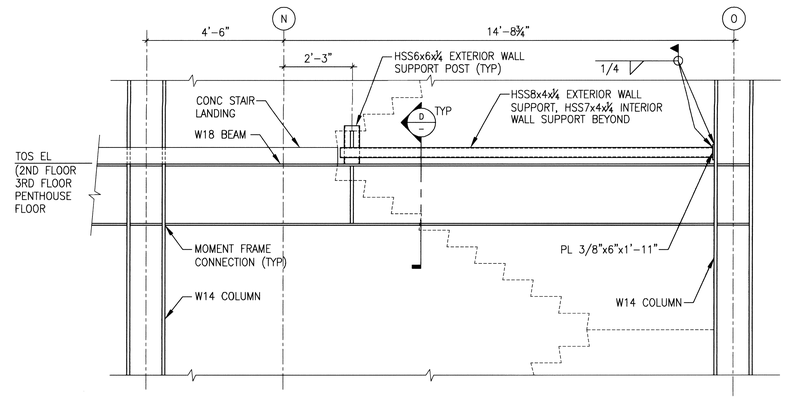

C PARTIAL STRUCTURAL FRAMING ELEVATION ON GRID 0.4
1/2"=1'-0"

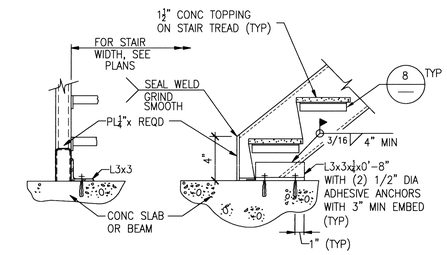

4 STRINGER BOTTOM CONNECTION
NTS

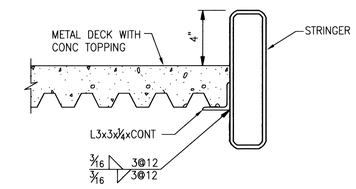

7 DECK SUPPORT AT LANDING
NTS

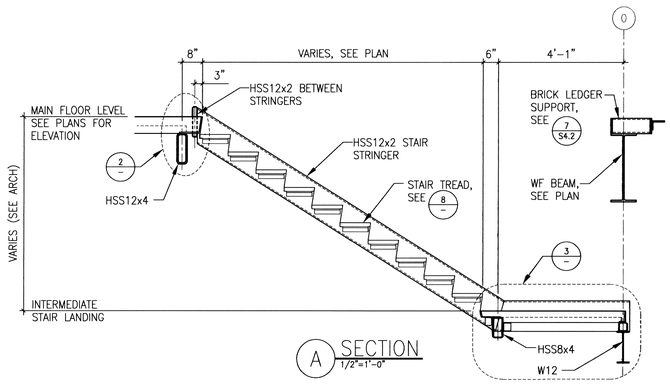

A SECTION
1/2"=1'-0"

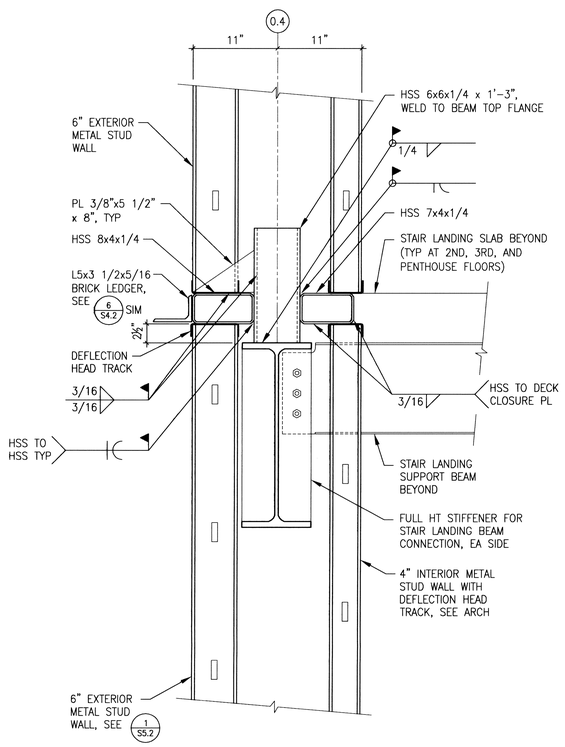

D SECTION
1 1/2"=1'-0"

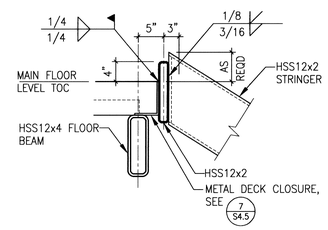

1 TYPICAL STRINGER CONNECTION
1"=1'-0"

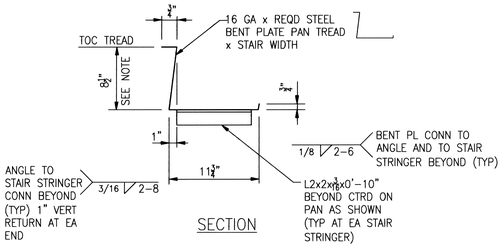

NOTE:
STAIR TREAD 1½" CONCRETE TOPPING AND STAIR STRINGER BEYOND NOT SHOWN.

8 TYPICAL STAIR PAN
NTS

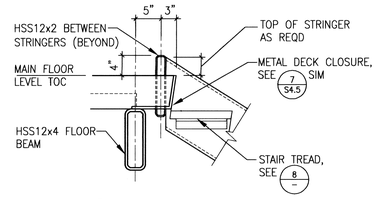

2 DETAIL
1"=1'-0"

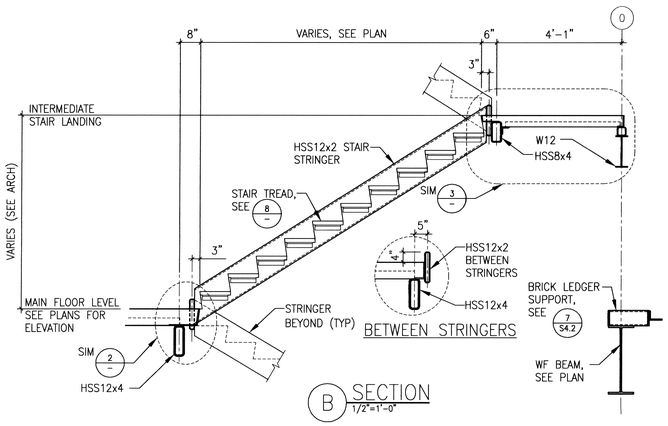

B SECTION
1/2"=1'-0"

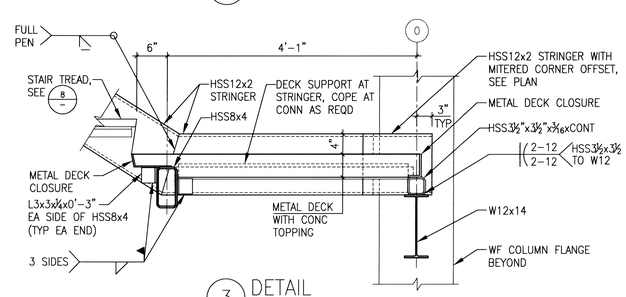

3 DETAIL
1"=1'-0"

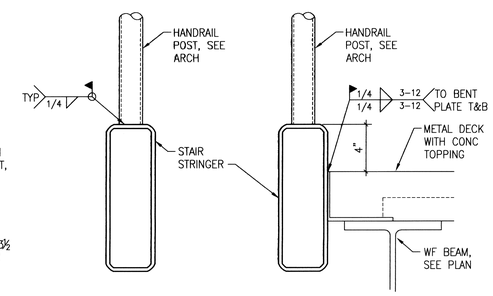

9 HANDRAIL POST CONNECTION
NTS

REVISIONS	DATE

CH2MHILL®
322 EAST FRONT STREET, SUITE 200, BOISE, ID 83702

PROFESSIONAL ENGINEER 7747 11-1-11 STATE OF IDAHO KENT B. SOELBERG

Architects and Planners, Chartered
565 W. Myrtle Street, Suite 225 Boise, Idaho 83702-7606

CAD FILE NAME: 531-317_S4.4.DWG
XREF FILE NAME: 531-317_xVAbord.DWG

DRAWING TITLE: STAIR PLANS, SECTIONS, AND DETAILS
PROJECT TITLE: REPLACE AND MODERNIZE SURGERY / INTENSIVE CARE UNIT
DATE: 11/01/2011
PROJECT NO.: 531-317
APPROVED: CHIEF OF FACILITY MANAGEMENT SERVICE
BUILDING NUMBER: 85
CHECKED: KBS
DRAWN: LAH
DRAWING NO.: S4.4
APPROVED: MEDICAL CENTER DIRECTOR
LOCATION: VAMC BOISE, IDAHO
DWG 68 OF 188

FOR CONSTRUCTION
DEPARTMENT OF VETERANS AFFAIRS

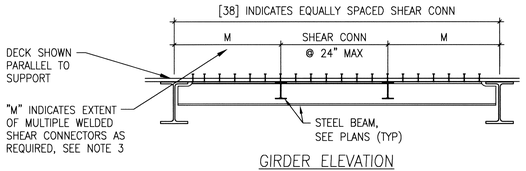

GIRDER ELEVATION

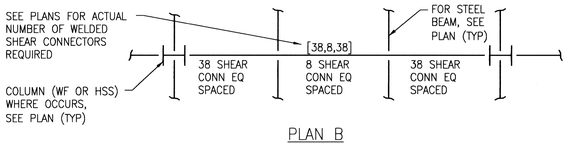

PLAN B

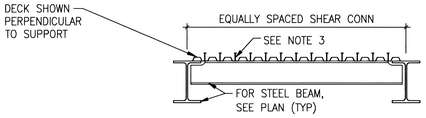

ELEVATION

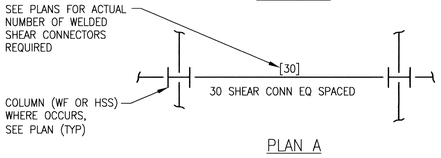

PLAN A

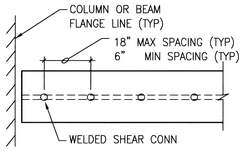

SINGLE LINE – PLAN

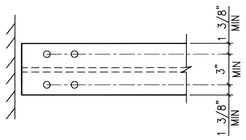

MULTIPLE LINE – PLAN

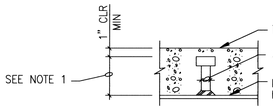

TYPICAL STUD

NOTES:

1. WELDED SHEAR CONNECTORS SHALL BE 3/4" DIAMETER x 3 1/2" FOR 1 1/2-INCH METAL DECK, 3/4" DIAMETER x 4" FOR 2-INCH METAL DECK, AND 3/4" DIAMETER x 5" FOR 3-INCH METAL DECK AREAS RECEIVING CONCRETE TOPPING UNLESS OTHERWISE NOTED.
2. [38] INDICATES NUMBER OF SHEAR CONNECTORS EQUALLY SPACED OVER PORTION OF BEAM OR GIRDER LENGTH (REF: "PLAN A" THIS DETAIL) RECEIVING METAL DECK AND CONCRETE TOPPING; SEE PLANS FOR ACTUAL NUMBER REQUIRED.
3. [38,8,38] INDICATES NUMBER OF SHEAR CONNECTORS REQUIRED FOR GIRDERS (REF: "PLAN B" THIS DETAIL); SEE PLANS FOR ACTUAL NUMBER REQUIRED.
4. WHERE WELDED SHEAR CONNECTORS FILL EVERY TROUGH, REMAINING SHEAR CONNECTORS SHALL BE INSTALLED IN TWO OR MORE ROWS STARTING AT EACH END OF BEAM OR GIRDER.
5. WHERE NUMBER OF SHEAR CONNECTORS ARE NOT INDICATED ON THE PLANS, PROVIDE WELDED SHEAR CONNECTORS AT 12" MAXIMUM ON CENTER EQUALLY SPACED OVER FULL LENGTH OF BEAM FOR FRAMED AREAS RECEIVING CONCRETE TOPPING (TYPICAL UNLESS OTHERWISE NOTED).
6. WELDED SHEAR CONNECTORS ARE NOT REQUIRED FOR BEAMS WEIGHING LESS THAN 12 POUNDS PER FOOT (TYPICAL UNLESS OTHERWISE NOTED).
7. SHEAR CONNECTORS WELDED THROUGH METAL DECKING MAY BE SUBSTITUTED FOR TYPICAL METAL DECK PLUG WELD.
8. PROVIDE 1-INCH CLEARANCE AROUND ALL WELDED SHEAR CONNECTOR FOR PROPER EMBEDMENT.
9. PROVIDE ADDITIONAL SHEAR CONNECTORS TOWARDS BEAM SUPPORTS WHERE DECK FLUTE LAYOUT IS SUCH THAT UNIFORM DISTRIBUTION OF SHEAR CONNECTORS IS NOT POSSIBLE.
10. DO NOT ATTACH SHEAR CONNECTORS TO SPECIAL MOMENT FRAME BEAM WITHIN DESIGNATED PROTECTED ZONE. SEE DETAIL 1 ON DRAWING S4.6.

1 TYPICAL WELDED SHEAR CONNECTOR
NTS

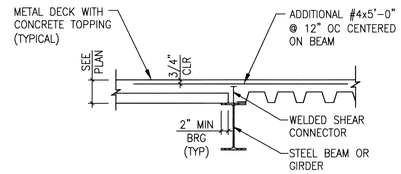

DECK SPAN TRANSITION

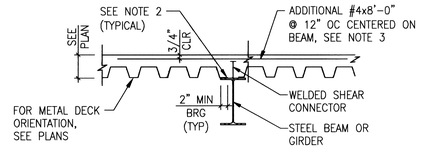

DECK AT BEAM / GIRDER

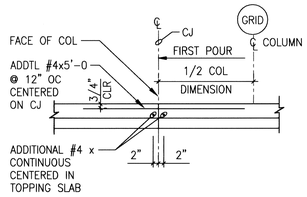

CJ PERPENDICULAR TO DECK SPAN

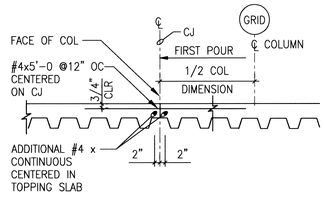

CJ PARALLEL TO DECK BEAM SPAN

NOTES:

1. FOR METAL DECK, BEAM, AND WELDED SHEAR CONNECTOR SIZE AND SPACING NOT SHOWN, SEE PLANS.
2. CUT METAL DECK AS REQUIRED OVER GIRDERS SO VALLEY OCCURS AT CENTERLINE OF GIRDER.
3. PROVIDE INDICATED ADDITIONAL REINFORCING BARS OVER ALL BEAMS RUNNING PARALLEL TO DECK SPAN. WHERE METAL DECK EXTENDS PERPENDICULAR TO SUPPORT, PROVIDE ADDITIONAL REINFORCING BARS ONLY AT LOCATIONS WHERE BEAM/GIRDER MEMBER EXCEEDS 18-INCH NOMINAL DEPTH.
4. PRIOR TO PRE-CONCRETE MEETING SPECIFIED, CONTRACTOR SHALL SUBMIT DIMENSIONED LAYOUT OF PROPOSED CONSTRUCTION JOINT LOCATIONS IN CONCRETE TOPPING SLAB FOR REVIEW AND APPROVAL. SUBMITTAL SHALL INCLUDE CONCRETE PLACEMENT SEQUENCE AND PROPOSED TIME BETWEEN ADJACENT PLACEMENTS.

2 TYPICAL METAL DECK CONCRETE SLAB REINFORCEMENT
NTS

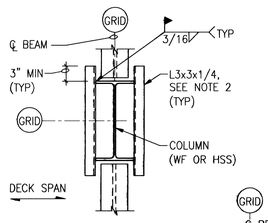

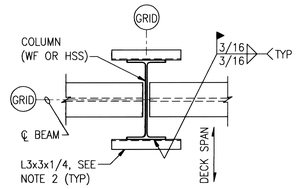

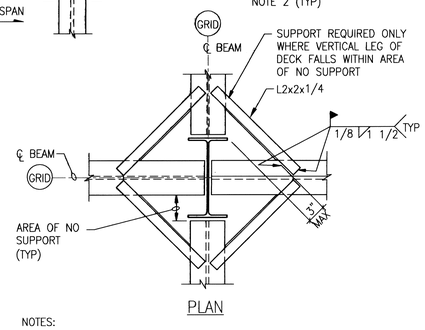

PLAN

NOTES:

1. PROVIDE ADDITIONAL SUPPORT ANGLES AS REQUIRED AT LOCATIONS WHERE BEAMS DO NOT FRAME TO COLUMNS WHETHER SHOWN OR NOT. PROVIDE 16 GAGE GALVANIZED SHEET METAL TO FILL COLUMN CAVITY AS REQUIRED WHERE BEAMS OCCUR ON 2-SIDES OR MORE.

3 TYPICAL METAL DECK SUPPORT AT COLUMN
NTS

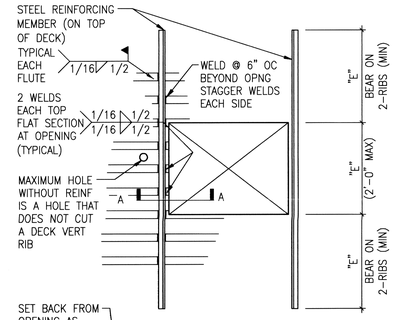

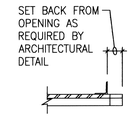

SECTION A–A

REINFORCING MEMBER	OPENING "E"
L 1 1/2x1 1/2x1/4	2'-0" MAX
PL 3x1/4	1'-1" MAX
PL 12 GA 8" TYP ALL AROUND	0'-8" MAX

NOTE:
FOR OPENINGS LARGER THAN 2'-0", SEE FRAMING PLANS

4 TYPICAL ROOF DECK OPENING
NTS

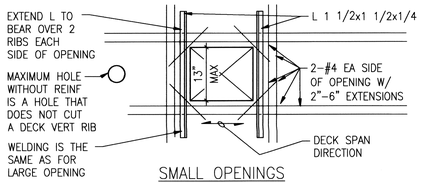

SMALL OPENINGS

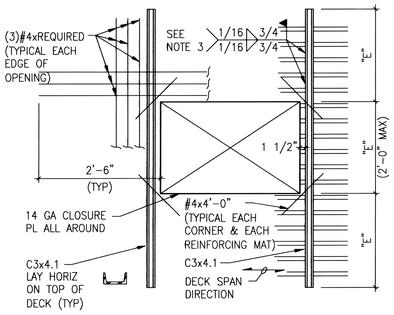

LARGE OPENINGS

NOTES:

1. BARS PARALLEL TO DECK SPAN SHALL BE PLACED IN DECK FLUTES.
2. FOR OPENINGS LARGER THAN 2'-0", SEE FRAMING PLANS.
3. PROVIDE 2 WELDS PER TOP OF EACH DECK FLUTE AS SHOWN.

5 TYPICAL FLOOR DECK OPENING
NTS

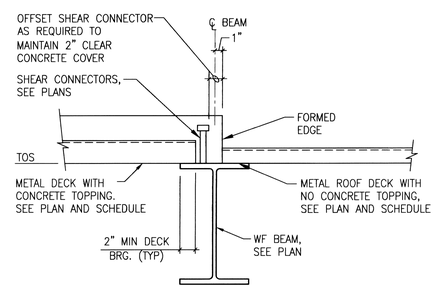

NOTE:
SEE DETAILS THIS SHEET FOR ADDITIONAL INFORMATION

6 CONCRETE TOPPING TRANSITION
NTS

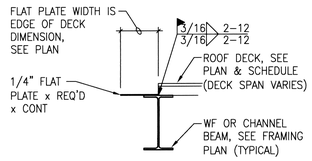

SECTION AT ROOF DECK

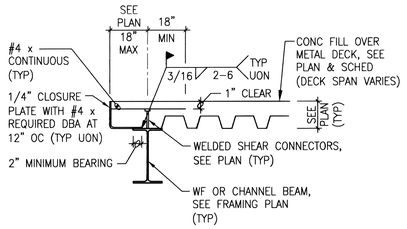

SECTION – TYPICAL OVERHANG AT FLOOR DECK

7 TYPICAL DECK OVERHANG
NTS

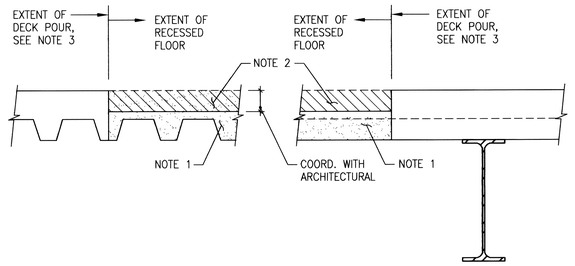

PERPENDICULAR TO DECK FLUTES

PARALLEL TO DECK FLUTES

NOTES:

1. SECONDARY POUR CONSISTING OF NON-SHRINK GROUT, PLACE AFTER DECK POUR. THICKNESS OF GROUT OVER DECK FLUTES SHALL BE COORDINATED WITH THE TILE AND SETTING BED INSTALLATION REQUIREMENTS.
2. TILE AND SETTING BED, SEE ARCHITECTURAL.
3. METAL FLOOR DECK SHALL BE CONTINUOUS THROUGH THE RECESSED SLAB AREA (NO JOINT AT THE INTERIOR SUPPORT). COORDINATE LOCATION OF FORMWORK AT PERIMETER OF RECESSED AREA WITH ARCHITECTURAL.

8 RECESSED FLOOR AT ELEVATED DECK
1 1/2"=1'-0"

TYP NO.	METAL DECK SCHEDULE: VERCO DECK PRODUCT (SEE NOTES 1, 2)	DEPTH (IN)	GAGE NO.	I MIN (IN4)	S+ MIN (IN3)	S- MIN (IN3)	CONC TOPPING OVER METAL DECK (IN)	TOTAL DEPTH (IN)	SLAB REINF	DECK ATTACHMENT AND COMMENTS
1	TYPE W3 FORMLOK	3.00	20	0.896	0.534	0.564	3.5	6.50	FIBER	NOTES 3, 5
2	TYPE HSB OR PLB	1.50	18.00	0.30	0.32	0.34	---	1.50	---	NOTE 4
3	TYPE W2 FORMLOCK	2	20.00	0.423	0.361	0.37	2.5	4.5	FIBER	NOTES 3, 5

METAL DECK SCHEDULE NOTES:

1. ALL METAL DECK (ROOF AND FLOOR DECK) SHALL BE MANUFACTURED BY VERCO MANUFACTURING CO. OR APPROVED EQUAL WITH MINIMUM SECTION PROPERTIES LISTED IN THE SCHEDULE ABOVE. THE STEEL SHALL BE ZINC COATED CONFORMING TO ASTM A525, CLASS G60.
2. MINIMUM BEARING OF METAL DECK ON SUPPORTS SHALL BE 2 INCHES UNLESS OTHERWISE NOTED. METAL DECK UNITS SHALL BE CONTINUOUS OVER TWO OR MORE SPANS WHERE POSSIBLE. WHERE SINGLE SPAN CONDITIONS OCCUR: DECK RECEIVING CONCRETE TOPPING SHALL BE SHORED, AND DECK WITHOUT CONCRETE TOPPING SHALL BE NEXT HEAVIER GAGE.
3. ATTACH W3 FORMLOK, W2 FORMLOCK AND B FORMLOK METAL DECK AT PERPENDICULAR SUPPORTS WITH 3/4" DIAMETER PUDDLE WELDS IN EACH FLUTE AND TO PARALLEL SUPPORTS WITH 3/4" DIAMETER PUDDLE WELDS SPACED 2'-0" ON CENTER (MAXIMUM) UNLESS OTHERWISE NOTED. WELDS ARE NOT REQUIRED WHERE LOCATION COINCIDES WITH WELDED SHEAR STUD. SIDELAPS SHALL BE ATTACHED BY BUTTON-PUNCHING AT 3'-0" ON CENTER UNLESS OTHERWISE NOTED.
4. ATTACH VERCO TYPE "HSB" OR VERCO TYPE "PLB" DECK AT PERPENDICULAR SUPPORTS WITH 3/4" DIAMETER PUDDLE WELDS IN EACH FLUTE (5 PER 36" PANEL) AND AT PARALLEL SUPPORTS WITH 3/4" DIAMETER PUDDLE WELDS AT 24" ON CENTER. SIDE LAPS SHALL BE ATTACHED WITH TOP SEAM WELDS AT 24" ON CENTER. ATTACH VERCO TYPE "PLB" DECK SIDE LAPS PUNCHLOK (VSC) TOOL @ 24" ON CENTER.
5. PROVIDE VENTED DECK WHERE MEMBRANE ROOFING SYSTEM WILL BE APPLIED OVER CONCRETE TOPPING, VENTED DECK MAY BE USED AT OTHER LOCATIONS AT CONTRACTOR'S OPTION.

FOR CONSTRUCTION

CH2MHILL®
322 EAST FRONT STREET, SUITE 200, BOISE, ID 83702

PROFESSIONAL ENGINEER 7747 11-1-11 STATE OF IDAHO AKNT B. SOELBERG

ZSA. Architects and Planners, Chartered
565 W. Myrtle Street, Suite 225 Boise, Idaho 83702-7606

REVISIONS | DATE

CAD FILE NAME: 531-317_S4.5.DWG
XREF FILE NAME: 531-317_xVAbord.DWG

DRAWING TITLE: METAL DECK DETAILS
PROJECT TITLE: REPLACE AND MODERNIZE SURGERY / INTENSIVE CARE UNIT
DATE: 11/01/2011
PROJECT NO.: 531-317
APPROVED: CHIEF OF FACILITY MANAGEMENT SERVICE
BUILDING NUMBER: 85 | CHECKED: KBS | DRAWN: LAH
DRAWING NO.: S4.5
APPROVED: MEDICAL CENTER DIRECTOR
LOCATION: VAMC BOISE, IDAHO
DWG 69 OF 188

DEPARTMENT OF VETERANS AFFAIRS

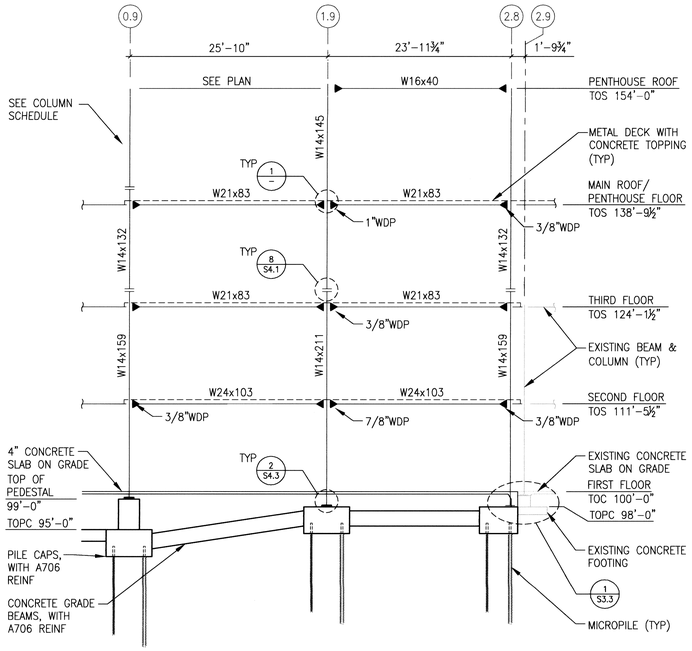

NOTE: WDP = WEB DOUBLER PLATE, SEE 1/—

SPECIAL MOMENT FRAME ALONG GRID O

⅛"=1'-0"

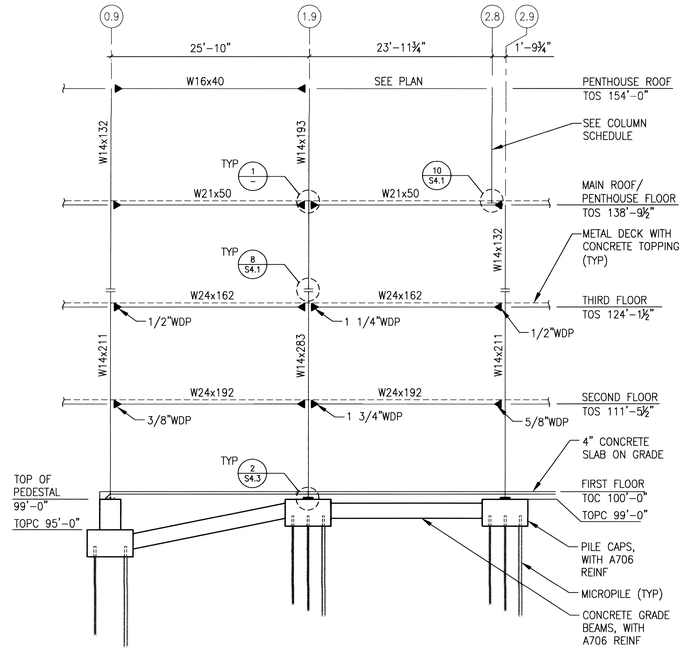

NOTE: WDP = WEB DOUBLER PLATE, SEE 1/—

SPECIAL MOMENT FRAME ALONG GRID K.6

⅛"=1'-0"

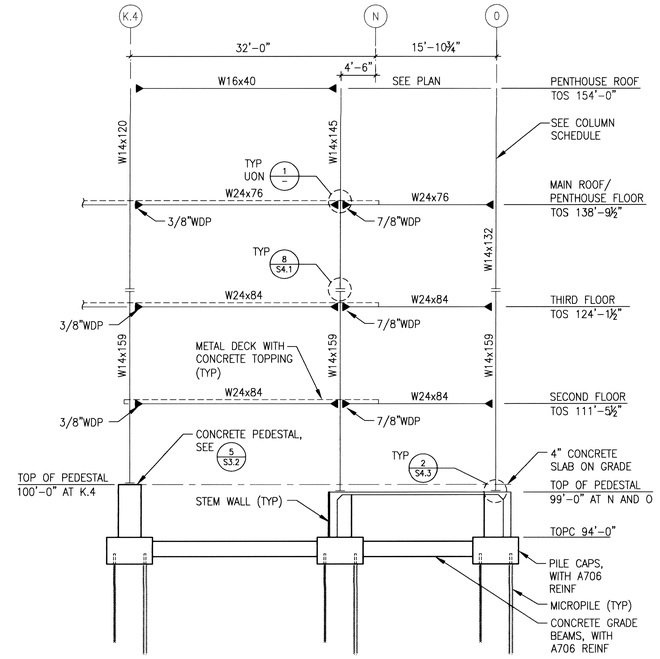

NOTE: WDP = WEB DOUBLER PLATE, SEE 1/—

SPECIAL MOMENT FRAME ALONG GRID 0.4

⅛"=1'-0"

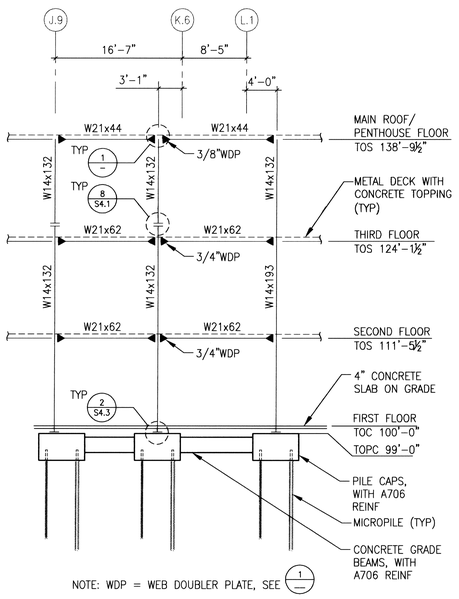

NOTE: WDP = WEB DOUBLER PLATE, SEE 1/—

SPECIAL MOMENT FRAME ALONG GRID 3.8

⅛"=1'-0"

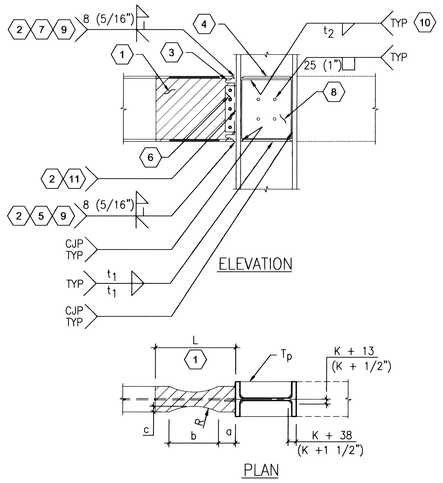

BEAM SIZE	REDUCED SECTION CUT			CONTINUITY PLATE T_p	FILLET WELD		PROTECTED ZONE L
	a (in)	b (in)	c (in)		t_1	t_2	
W16x40	5.25	13.50	1.75	1/2"	1/4	5/16	1'-10"
W21x44	4.88	17.00	1.63	1/2"	1/4	5/16	2'-1"
W21x50	4.50	14.00	1.63	3/8"	3/16	5/16	1'-10"
W21x62	6.18	17.75	2.00	3/4"	3/8	5/16	2'-3"
W24x76	6.63	20.25	2.18	5/8"	5/16	5/16	2'-6"
W21x83	6.25	18.18	2.00	7/8"	7/16	5/16	2'-4"
W24x84	6.75	20.38	2.25	7/8"	7/16	5/16	2'-7"
W24x103	6.75	20.75	2.25	1-1/4"	13/16*	5/16	2'-4"
W24x162	9.50	21.25	3.25	1"	1/2	5/16	2'-10"
W24x192	9.63	21.63	3.25	1-1/2"	1-3/16*	5/16	2'-10"

* PARTIAL-JOINT-PENETRATION GROOVE WELD

REDUCED SECTION CUT RADIUS $R = \frac{4c^2 + b^2}{8c}$

1 SPECIAL MOMENT FRAME CONNECTION
NTS

DETAIL KEYNOTES:

1. SHADED REGION IS THE PROTECTED ZONE. WITHIN THE PROTECTED ZONE, DISCONTINUITIES CREATED BY MILL, FABRICATION, OR ERECTION OPERATIONS, INCLUDING TACK WELDS, ERECTION AIDS, AIR-ARC GOUGING, OR THERMAL CUTTING, SHALL BE REPAIRED. DECKING ATTACHMENTS THAT PENETRATE INTO THE BEAM FLANGE, INCLUDING WELDED SHEAR STUDS, SHALL NOT BE PLACED WITHIN THE PROTECTED ZONE. PUDDLE WELDS REQUIRED TO SECURE DECKING ARE PERMITTED WITHIN THE PROTECTED ZONE. WELDED, BOLTED, SCREWED, OR POWDER-ACTUATED FASTENERS FOR CLOSURE ANGLES, EXTERIOR FACADES, INTERIOR PARTITIONS, DUCTWORK, PIPING, EQUIPMENT OR OTHER CONSTRUCTION ARE NOT PERMITTED WITHIN THE PROTECTED ZONE.
2. CJP DEMAND CRITICAL WELD. TOP & BOTTOM WELD SHALL BE MADE WITH A FILLER METAL CAPABLE OF PROVIDING CHARPY V-NOTCH TOUGHNESS (CVN) OF 20 FT-LBS AT -20°F AND 40 FT-LBS AT 70 DEG F. DEMAND CRITICAL WELDS SHALL BE PERFORMED PER AWS D1.8
3. WELD ACCESS HOLES SHALL BE PER AISC 360-05 ARTICLE J1.6
4. CONTINUITY PLATE, TOP & BOTTOM T_p. ALIGN WITH BEAM FLANGES AS SHOWN.
5. REMOVE BACKING, BACKGOUGE, FILL GROVE AND WELD 8 (5/16") REINFORCING FILLET.
6. PL10 (PL3/8) W/ BOLTS AS REQUIRED FOR ERECTION, ACTS AS BACKING FOR CJP WELD.
7. ATTACH BACKING TO COLUMN FLANGE WITH 5/16" CONTINUOUS FILLET WELD.
8. WEB DOUBLER PLATE (WDP). SEE MOMENT FRAME ELEVATIONS THIS SHEET FOR LOCATIONS & PLATE THICKNESS.
9. REMOVE WELD TABS
10. WEB DOUBLER TO CONTINUITY PLATE.
11. BEAM WEB TO COLUMN FLANGE.

DETAIL GENERAL NOTES:

A. CONNECTION SHALL BE FABRICATED IN ACCORDANCE WITH AISC 358-05.
B. REDUCED SECTION CUT SHALL BE MADE USING THERMAL CUTTING TO PROVIDE A SMOOTH CURVE. MAXIMUM SURFACE ROUGHNESS SHALL BE 500 MICRO INCHES. THERMAL CUTTING TOLERANCES SHALL BE PLUS OR MINUS 6 (1/4 INCH). CORNERS BETWEEN REDUCED SECTION SURFACE AND TOP AND BOTTOM OF THE FLANGES SHALL BE GROUND TO REMOVE SHARP EDGES.
C. CONTINUITY PLATES AND WEB DOUBLERS SHALL BE A572 GRADE 50 PLATE.
D. DO NOT ATTACH SHEAR CONNECTORS TO BEAM WITHIN PROTECTED ZONE. SEE DETAIL 1/S4.5.
E. PROTECTED ZONE SHALL BE PAINTED RED AND STENCILED WITH "PROTECTED ZONE" AFTER BEAM INSTALLATION AND PRIOR TO CONTINUING ADJACENT WORK.
F. WELDS SHALL BE TESTED PER AISC 341-05 APPENDIX Q5

FOR CONSTRUCTION

REVISIONS	DATE

CH2MHILL®
322 EAST FRONT STREET, SUITE 200, BOISE, ID 83702

PROFESSIONAL ENGINEER 7747 STATE OF IDAHO KENT B. SOELBERG 11-1-11

Architects and Planners, Chartered
565 W. Myrtle Street, Suite 225 Boise, Idaho 83702-7606

CAD FILE NAME: 531-317_S4.6.DWG
XREF FILE NAME: 531-317_xVAbord.DWG

DRAWING TITLE: SPECIAL MOMENT FRAME ELEVATIONS AND DETAILS

APPROVED: CHIEF OF FACILITY MANAGEMENT SERVICE

APPROVED: MEDICAL CENTER DIRECTOR

PROJECT TITLE: REPLACE AND MODERNIZE SURGERY / INTENSIVE CARE UNIT

BUILDING NUMBER: 85 | CHECKED: KBS | DRAWN: LAH

LOCATION: VAMC BOISE, IDAHO

DATE: 11/01/2011

PROJECT NO. 531-317

DRAWING NO. S4.6

DEPARTMENT OF VETERANS AFFAIRS

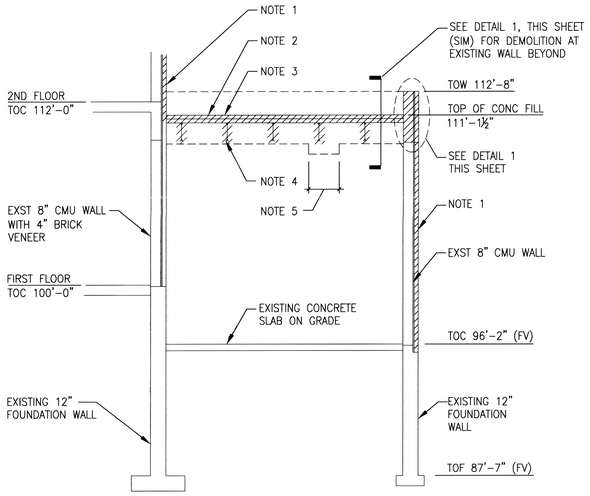

NOTES:

1. SEE ARCHITECTURAL FOR DEMOLITION OF EXISTING BRICK VENEER.
2. DEMOLITION NOTE: CONTRACTOR SHALL PROTECT EXISTING CONSTRUCTION AND EQUIPMENT FROM WATER AND WEATHER AT ALL TIMES
3. REMOVE EXISTING METAL DECK WITH CONCRETE FILL
4. REMOVE EXISTING ROOF JOISTS (TYPICAL). PROVIDE TEMPORARY AND FINAL SUPPORT OF EXISTING ROOF-SUPPORTED MATERIALS AND EQUIPMENT
5. 24 INCH-WIDE SEGMENT OF ADDITIONAL WALL DEMOLITION ROUGHLY CENTERED BELOW NEW W30 FLOOR BEAM, SEE DETAIL 1 THIS SHEET (SIM)

A SECTION 1/4" = 1'-0"

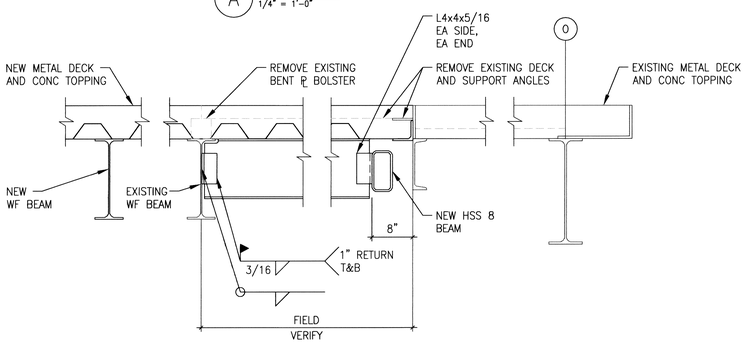

B SECTION 1"=1'-0"
S2.3

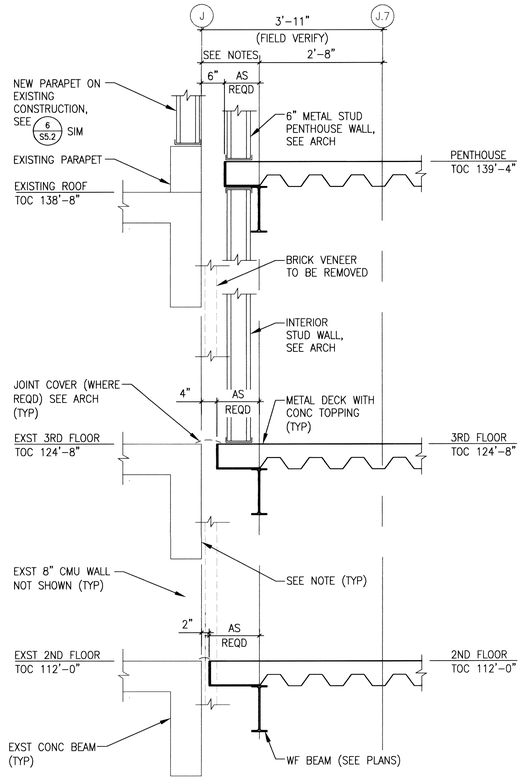

NOTES:

1. FIELD VERIFY LOCATION OF EXISTING CONCRETE BEAM FACE
2. FOR CONDITION AT BARE METAL ROOF DECK, SEE SECTION F, THIS DRAWING

E SECTION 3/4" = 1'-0"

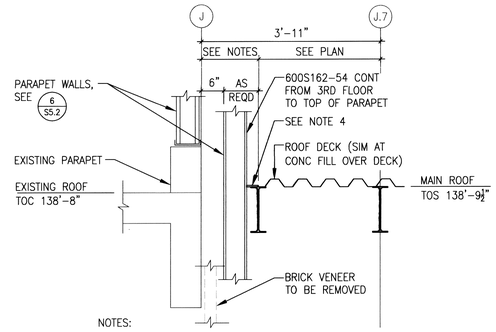

NOTES:

1. FIELD VERIFY LOCATION OF EXISTING CONCRETE BEAM FACE
2. FOR EDGE OF DECK LOCATION EAST OF EXIST BUILDING 85, SEE PLAN.
3. FOR CONDITION AT 2ND AND 3RD FLOORS BELOW, SEE SECTION E, THIS DRAWING.
4. DECK OVERHANG PLATE PER DETAIL 7, DRAWING S4.5 (OMIT WHERE INSIDE FACE OF STUD IS WITHIN 1" OF BEAM FLANGE)

F SECTION 3/4" = 1'-0"

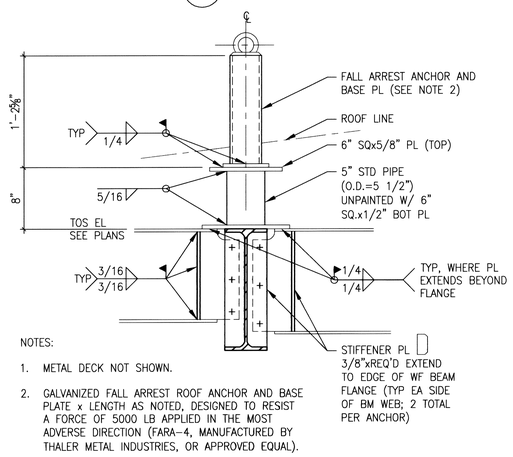

NOTES:

1. METAL DECK NOT SHOWN.
2. GALVANIZED FALL ARREST ROOF ANCHOR AND BASE PLATE x LENGTH AS NOTED, DESIGNED TO RESIST A FORCE OF 5000 LB APPLIED IN THE MOST ADVERSE DIRECTION (FARA-4, MANUFACTURED BY THALER METAL INDUSTRIES, OR APPROVED EQUAL).

4 FALL ARREST ANCHOR 1 1/2"=1'-0"

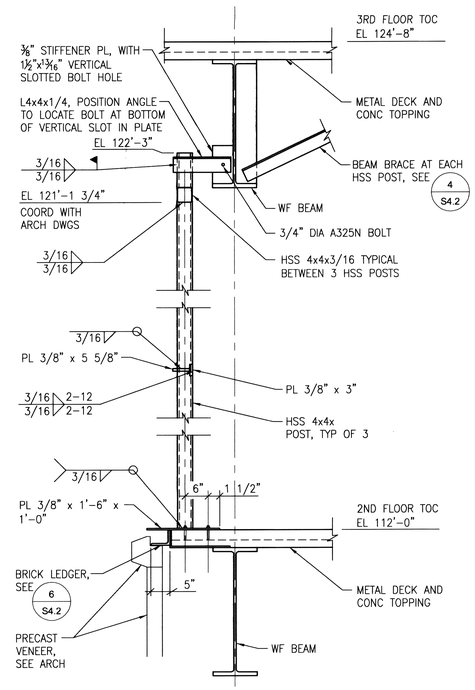

G LOUVER SUPPORT FRAME SECTION 3/4" = 1'-0"

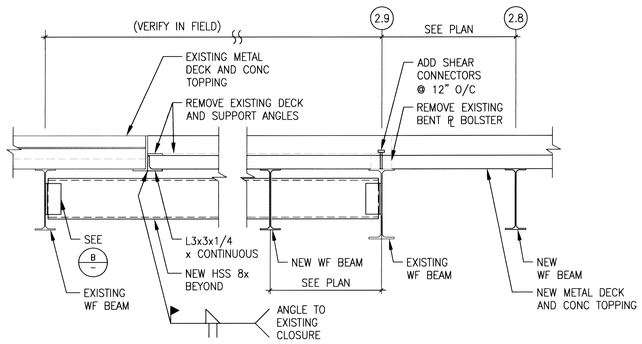

C SECTION 1"=1'-0"
S2.3

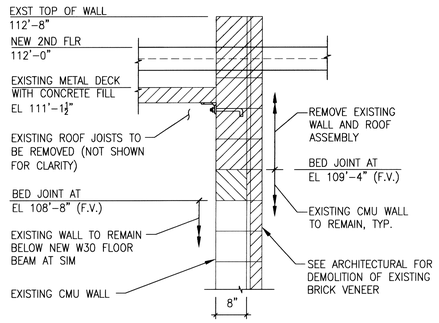

1 DETAIL 3/4"=1'-0"

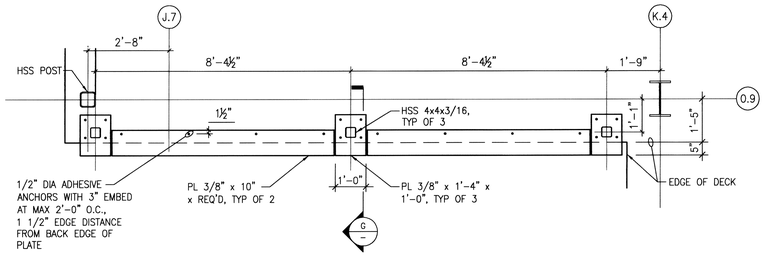

2 ENLARGED PLAN AT LOUVER SUPPORT – 2ND FLOOR 1/2"=1'-0"

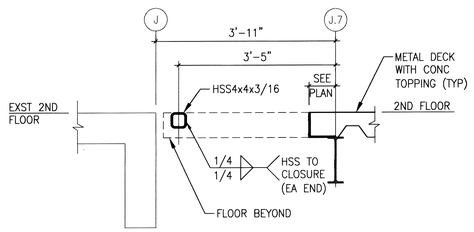

3 DETAIL 3/4" = 1'-0"

FOR CONSTRUCTION

REVISIONS	DATE

CH2MHILL®
322 EAST FRONT STREET, SUITE 200, BOISE, ID 83702

PROFESSIONAL ENGINEER 7747 11-1-11 STATE OF IDAHO KENT B. SOELBERG

Architects and Planners, Chartered
565 W. Myrtle Street, Suite 225 Boise, Idaho 83702-7606

CAD FILE NAME: 531-317_S4.7.DWG
XREF FILE NAME: 531-317_xVAbord.DWG

DRAWING TITLE: MISCELLANEOUS SECTIONS AND DETAILS

PROJECT TITLE: REPLACE AND MODERNIZE SURGERY / INTENSIVE CARE UNIT

DATE: 11/01/2011
PROJECT NO. 531-317

APPROVED: CHIEF OF FACILITY MANAGEMENT SERVICE
APPROVED: MEDICAL CENTER DIRECTOR

BUILDING NUMBER: 85 | CHECKED: KBS | DRAWN: LAH

LOCATION: VAMC BOISE, IDAHO

DRAWING NO. S4.7
DWG 71 OF 188

DEPARTMENT OF VETERANS AFFAIRS

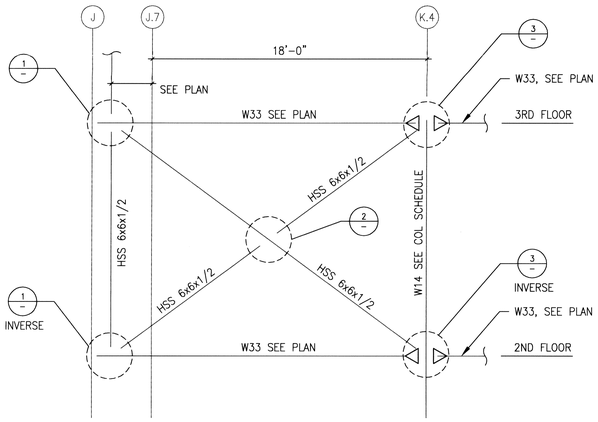

GRAVITY BRACED FRAME @ GRID 0.9 ELEVATION

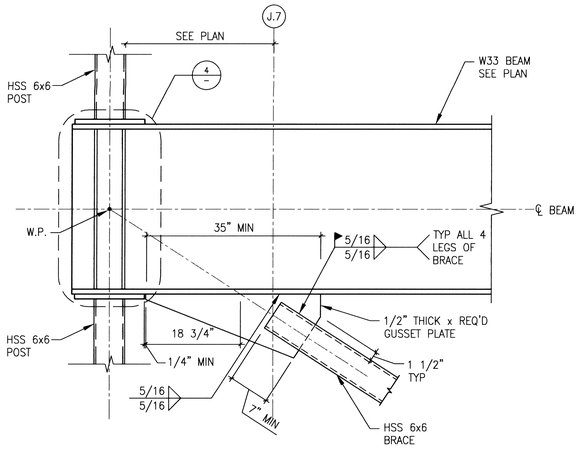

1 BRACED FRAME CONNECTION
NTS

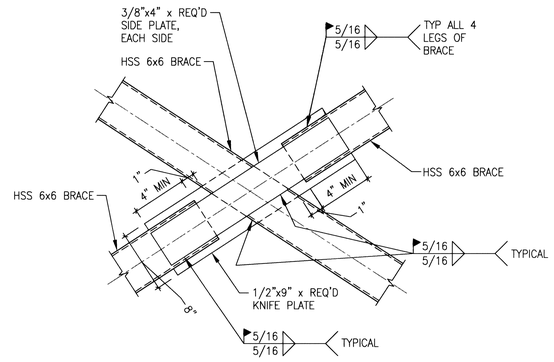

2 BRACED FRAME CONNECTION
NTS

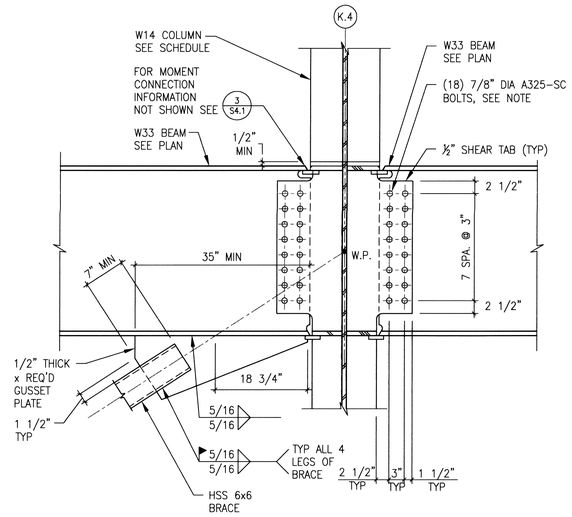

NOTE:
THE BOLTED JOINT OF THIS CONNECTION IS SLIP-CRITICAL. INSTALL AND TIGHTEN BOLT ASSEMBLIES AS SPECIFIED FOR SLIP-CRITICAL JOINTS

3 BRACED FRAME CONNECTION
NTS

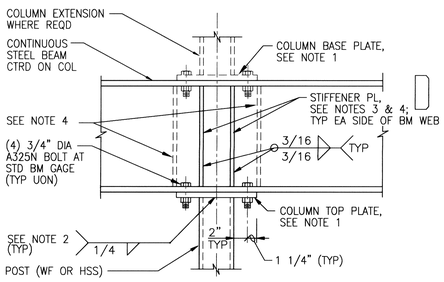

NOTES:

1. COLUMN PLATES SHALL BE CENTERED ON COLUMN AND SHALL BE 3/4" x REQUIRED x LARGER OF BEAM FLANGE WIDTH OR COLUMN DIMENSION PLUS 1-INCH.
2. FILLET WELD SIZES SHOWN SHALL BE INCREASED AS REQUIRED IN ACCORDANCE WITH AWS AND AISC MINIMUM WELD SIZE REQUIREMENTS FOR MEMBER THICKNESSES EXCEEDING 3/4 INCH.
3. STIFFENER PLATES SHALL BE 3/8" x REQUIRED AND SHALL EXTEND TO OUTSIDE EDGE OF BEAM FLANGE. PLATES SHALL BE LOCATED ON EACH SIDE OF BEAM WEB AND SHALL ALIGN WITH THE OUTSIDE DIMENSION OF THE LOWER COLUMN UNLESS OTHERWISE NOTED.
4. LOCATE STIFFENER PLATES AS REQUIRED FOR PROPER INSTALLATION WHEN TRANSVERSE BEAM CONNECTION OCCURS AT OR NEAR COLUMN CENTERLINE.

4 TYPICAL POST TO CONTINUOUS BEAM CONNECTION
NTS

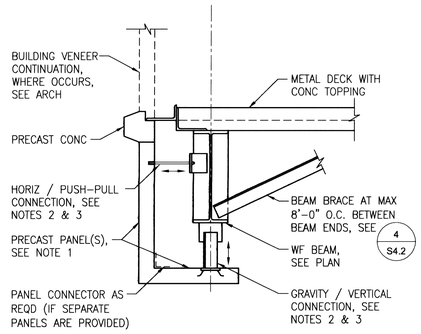

NOTES:

1. SEE ARCHITECTURAL DRAWINGS FOR PANEL CONFIGURATION, DIMENSIONS, JOINTS, ETC.
2. PRECAST PANEL CONNECTIONS SHALL BE DESIGNED BY PRECAST MANUFACTURER. CONNECTIONS SHOWN HERE ARE DIAGRAMATIC TO SHOW INTENT ONLY. DIFFERENT CONNECTION ELEMENTS OR DETAILS MAY BE UTILIZED PROVIDED THAT THEY MEET THE INTENT SHOWN HERE. DESIGN FOR 45 PSF SERVICE-LEVEL WIND LOAD (COMPONENTS & CLADDING).
3. NO CONNECTION SHALL BE MADE (INCLUDING BUT NOT LIMITED TO WELDS, BOLTS, SCREWS, POWDER-DRIVEN FASTENERS) TO SPECIAL MOMENT FRAME BEAMS WITHIN PROTECTED ZONES AT EACH END OF BEAM. SEE DETAIL 1/S4.6.

5 SUPPORT OF PRECAST PANELS AT BEAM
3/4"=1'-0"

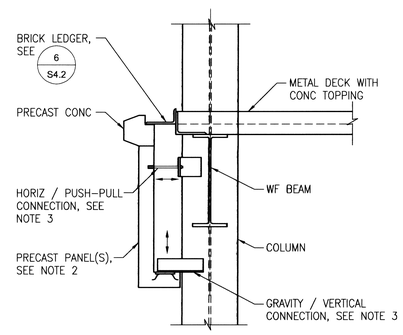

NOTES:

1. THIS DETAIL PROVIDED AS AN ALTERNATE TO DETAIL 5/S4.8 WHERE CONNECTION CANNOT BE MADE TO BEAM.
2. SEE ARCHITECTURAL DRAWINGS FOR PANEL CONFIGURATION, DIMENSIONS, JOINTS, ETC.
3. PRECAST PANEL CONNECTIONS SHALL BE DESIGNED BY PRECAST MANUFACTURER. CONNECTIONS SHOWN HERE ARE DIAGRAMATIC TO SHOW INTENT ONLY. DIFFERENT CONNECTION ELEMENTS OR DETAILS MAY BE UTILIZED PROVIDED THAT THEY MEET THE INTENT SHOWN HERE. DESIGN FOR 45 PSF SERVICE-LEVEL WIND LOAD (COMPONENTS & CLADDING).

6 SUPPORT OF PRECAST PANELS AT COLUMN
3/4"=1'-0"

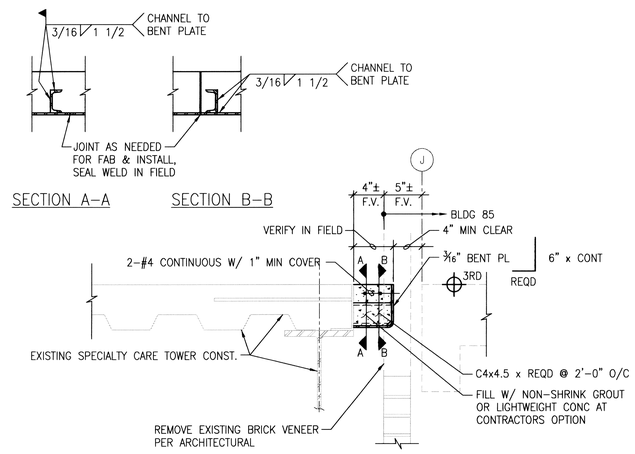

7 IN-FILL AT SEPARATION JOINT
1 1/2"=1'-0"

REVISIONS	DATE

CH2MHILL®
322 EAST FRONT STREET, SUITE 200, BOISE, ID 83702

PROFESSIONAL ENGINEER REGISTERED 7747 11-1-11 STATE OF IDAHO KENT B. SOELBERG

BSA. Architects and Planners, Chartered
565 W. Myrtle Street, Suite 225 Boise, Idaho 83702-7606

CAD FILE NAME: 531-317_S4.1.DWG
XREF FILE NAME: 531-317_xVAbord.DWG

DRAWING TITLE: GRAVITY BRACED FRAME ELEVATION AND DETAILS

PROJECT TITLE: REPLACE AND MODERNIZE SURGERY / INTENSIVE CARE UNIT

DATE: 11/01/2011
PROJECT NO. 531-317

APPROVED: CHIEF OF FACILITY MANAGEMENT SERVICE
APPROVED: MEDICAL CENTER DIRECTOR

BUILDING NUMBER: 85
CHECKED: KBS
DRAWN: LAH

LOCATION: VAMC BOISE, IDAHO

DRAWING NO. S4.8
DWG 72 OF 188

FOR CONSTRUCTION
DEPARTMENT OF VETERANS AFFAIRS

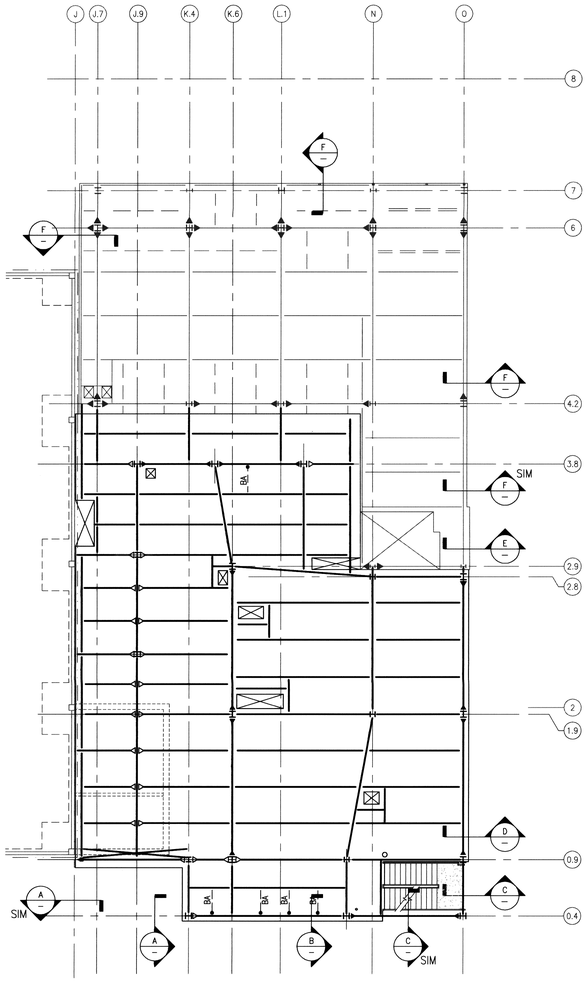

2ND FLOOR KEY PLAN

$\frac{3}{32}$"=1'-0"

GENERAL SHEET NOTES

A. SEE PLANS FOR DIMENSIONS FROM GRIDLINE TO EDGE OF DECK/SLAB. OUTSIDE FACE OF 6" STUD WALL IS AT EDGE OF SLAB, UNLESS OTHERWISE NOTED ON PLANS AND SECTIONS.

B. WINDOW, DOOR, AND LOUVER OPENINGS NOT SHOWN. SEE DETAIL 1 ON DRAWING S5.2 FOR DETAILS. COORDINATE WITH ARCHITECTURAL DRAWINGS.

KEYNOTES:

1. CONCRETE STEM WALL
2. 6" STUDS @ 16" ON CENTER MAX (TYPICAL). FOR BOTTOM AND TOP TRACK SUPPORTS SEE DETAIL 1 ON DRAWING S5.2
3. FLOOR SLAB. FOR TRACK ATTACHMENT, SEE DETAIL 1 ON DRAWING S5.2
4. NEW OR EXISTING METAL DECK WITH CONCRETE TOPPING. FOR TRACK ATTACHMENT, SEE DETAIL 1 ON DRAWING S5.2. FOR EDGE OF DECK DETAIL, SEE DETAIL 7 ON DRAWING S4.5. FOR EDGE OF DECK LOCATION SEE PLANS
5. METAL ROOF DECK, ORIENTATION VARIES
6. TYPICAL BRICK LEDGER SUPPORT. SEE DETAIL 6 ON DRAWING S4.2
7. BRICK VENEER, SEE ARCHITECTURAL DRAWINGS
8. WIDE FLANGE BEAM, SEE PLANS
9. SEE DETAIL 8 ON DRAWING S5.2
10. FOR BRICK LEDGER SUPPORT AT STAIR OPENING SEE DETAIL 7 ON DRAWING S4.2
11. MECHANICAL LOUVER FRAME AND SUPPORT, SEE DETAIL 2 ON DRAWING S4.7
12. EXISTING EXTERIOR VENEER
13. EXISTING METAL STUDS
14. EXISTING WIDE FLANGE BEAM
15. METAL WALL PANELS SEE ARCHITECTURAL DRAWINGS
16. AT GRID 0.4 SIMILAR EXCEPT SUPPORT OF WALLS AND BRICK PER SECTIONS C AND D ON DRAWING S4.4
17. SEE DETAIL 4 ON DRAWING S5.2

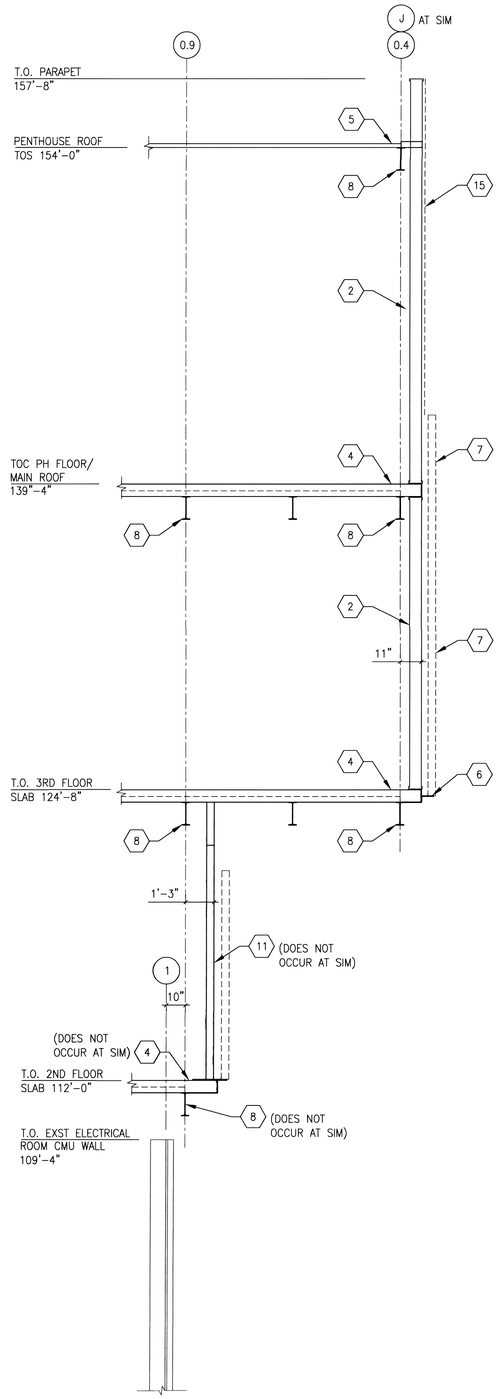

A SECTION 3/8"=1'-0"

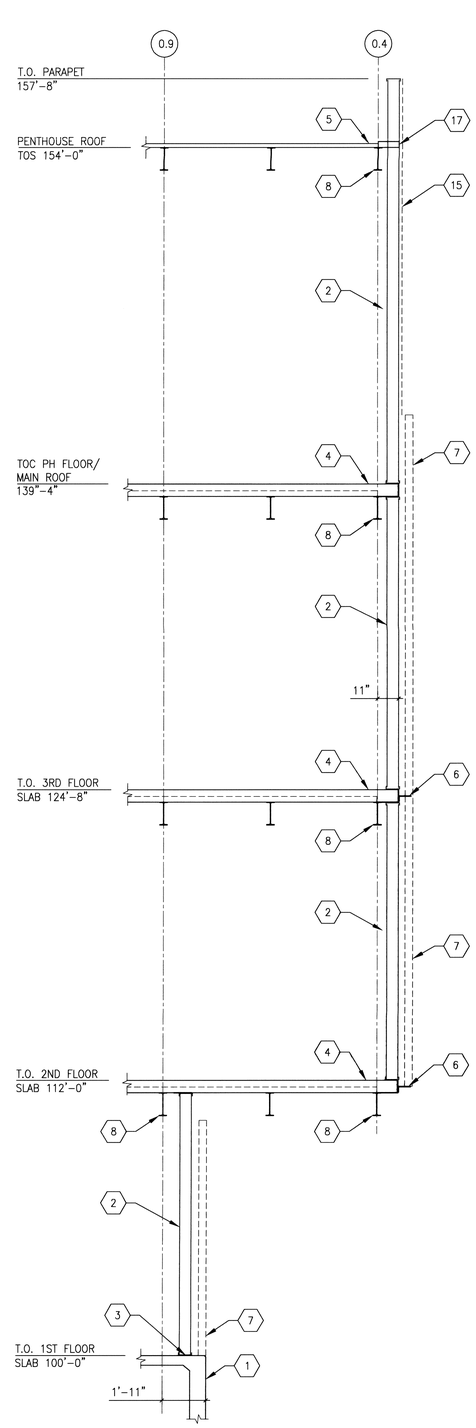

B SECTION 3/8"=1'-0"

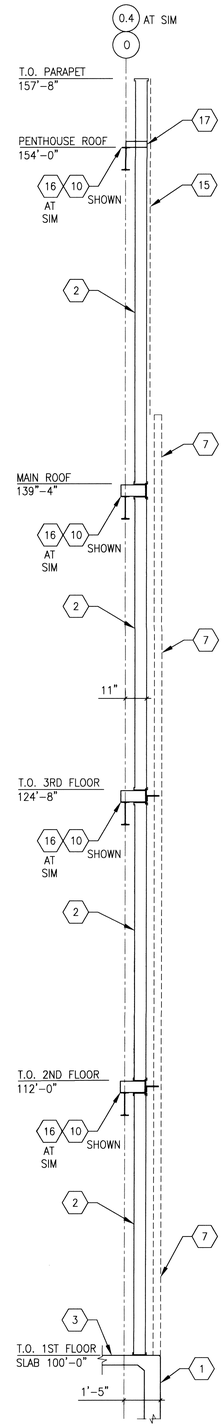

C SECTION 3/8"=1'-0"

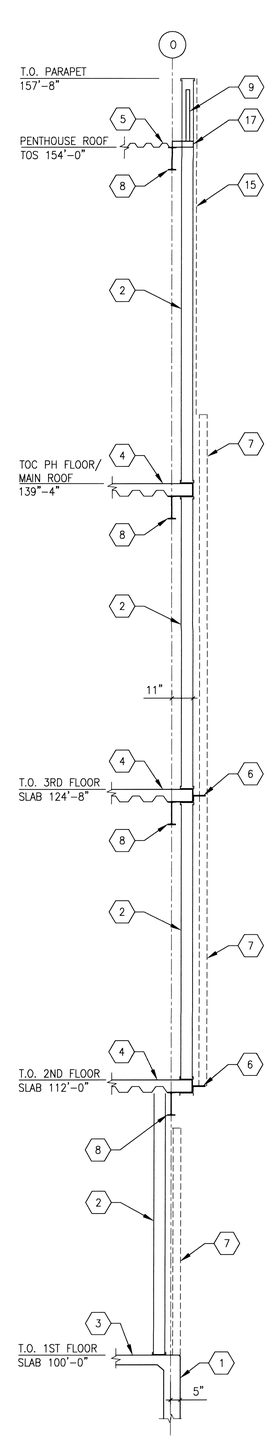

D SECTION 3/8"=1'-0"

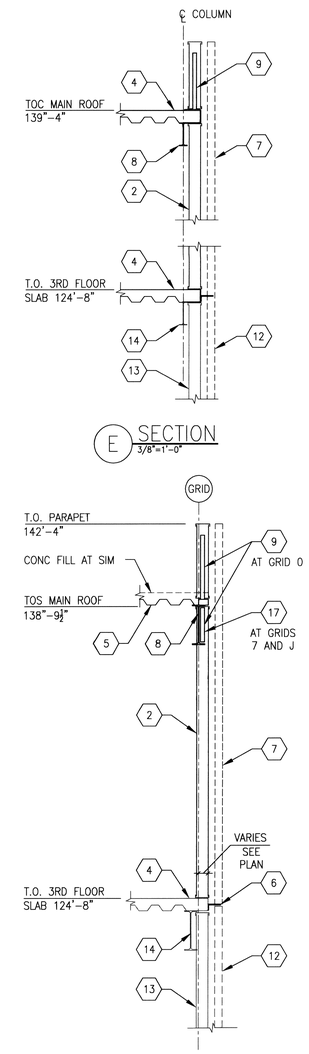

E SECTION 3/8"=1'-0"

F SECTION 3/8"=1'-0"

REVISIONS	DATE

CH2MHILL®
322 EAST FRONT STREET, SUITE 200, BOISE, ID 83702

PROFESSIONAL ENGINEER REGISTRATION 7747 STATE OF IDAHO KENT B. SOELBERG 11-1-11

ZGA Architects and Planners, Chartered
565 W. Myrtle Street, Suite 225 Boise, Idaho 83702-7606

CAD FILE NAME: 531-317_5.1.DWG
XREF FILE NAME: 531-317_xVAbord.DWG

DRAWING TITLE: BUILDING ENVELOPE SECTIONS

PROJECT TITLE: REPLACE AND MODERNIZE SURGERY / INTENSIVE CARE UNIT

DATE: 11/01/2011

PROJECT NO.: 531-317

APPROVED: CHIEF OF FACILITY MANAGEMENT SERVICE

APPROVED: MEDICAL CENTER DIRECTOR

BUILDING NUMBER: 85 | CHECKED: KBS | DRAWN: LAH

LOCATION: VAMC BOISE, IDAHO

DRAWING NO.: S5.1

DWG 73 OF 188

FOR CONSTRUCTION

DEPARTMENT OF VETERANS AFFAIRS

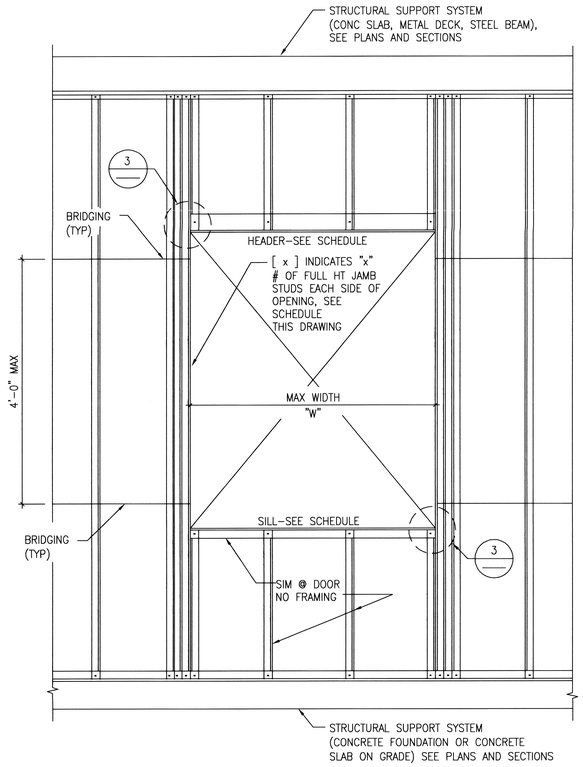

EXTERIOR WALL ELEVATION

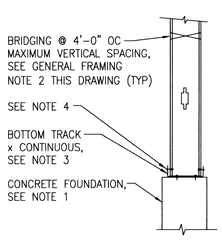

FOUNDATION/SLAB ON GRADE

EXTERIOR WALL SECTION

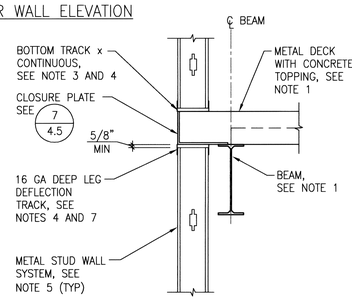

TYPICAL FLOOR

EXTERIOR WALL SECTION NOTES:

1. FOR SIZE, LOCATION, AND ELEVATION OF CONCRETE FOUNDATION, METAL DECK WITH CONCRETE TOPPING AND WIDE FLANGE BEAMS, SEE PLANS, AND SECTIONS.
2. COORDINATE LOCATION AND DETAILS OF EXTERIOR WALL SYSTEM WITH ARCHITECTURAL PRIOR TO FABRICATION.
3. BOTTOM TRACKS SHALL BE 600T125–54 FOR 6" STUD WALLS FASTEN EACH METAL STUD TO TRACK USING (1) #10–16 SHEET METAL SCREW EACH FACE (2 FASTENERS PER STUD PER END).
4. UNLESS OTHERWISE NOTED, TRACKS SHALL BE FASTENED TO SUPPORT USING TWO ROWS OF 0.145–INCH DIAMETER PAF STAGGERED AT 16–INCHES ON CENTER FOR AN 8–INCH NET SPACING (MINIMUM OF 2 FASTENERS PER TRACK SECTION) WITH 1 1/4" MINIMUM EMBEDMENT.
5. WALL STUDS SHALL BE 600S200–54@16" ON CENTER FOR 6" STUD WALLS UNLESS OTHERWISE NOTED ON PLANS.
6. FOR ADDITIONAL WALL DETAILS NOT SHOWN INCLUDING SHEATHING, INSULATION, AND VENEER, SEE ARCHITECTURAL.
7. TOP OF STUD MAY BE TEMPORARILY FASTENED TO DEFLECTION TRACK WITH SCREW, BUT ALL SCREWS MUST BE REMOVED AS SHEATHING IS INSTALLED TO ALLOW FOR DEFLECTION. ALTERNATIVE METHODS FOR PROVIDING DEFLECTION HEAD (I.E. NESTED TRACKS) MAY BE PROPOSED BY CONTRACTOR AND REVIEWED BY CONTRACTING OFFICER.
8. NO ATTACHMENTS OF ANY KIND (I.E. WELDS, SCREWS, POWDER ACTUATED FASTENERS, ETC) SHALL BE MADE TO BEAMS OF SPECIAL MOMENT FRAMES WITHIN PROTECTED ZONES AT EACH BEAM END. SEE DETAIL 1 ON DWG S4.6.

1 TYPICAL EXTERIOR METAL STUD WALL DETAILS
NTS

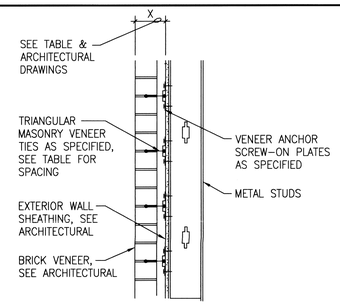

SECTION

MAXIMUM MASONRY TIE SPACING

"X"	HORIZ SPACING	VERT SPACING
6" MAX	16"	16"

2 MASONRY VENEER ANCHORAGE
NTS

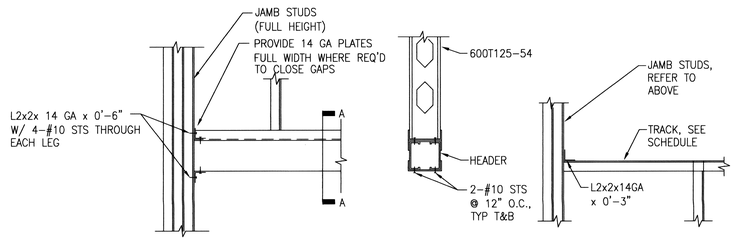

ELEVATION SECTION A–A SILL ELEVATION

OPENING FRAMING SCHEDULE			
MAX OPENING WIDTH "W"	MIN # JAMB STUDS	HEADER	SILL
4'–0'	2	(2) 600S200–54, (2) 600T125–54 BOX HEADER	(1) 600T125–54
6'–6'	3	(2) 600S200–54, (2) 600T125–54 BOX HEADER	(1) 600T125–54
9'–0"	4	(2) 600S200–54, (2) 600T125–54 BOX HEADER	(1) 600T125–54

NOTE:
JAMB STUDS SHALL BE SAME SIZE AND GRADE AS TYPICAL WALL STUDS

3 STUD OPENING FRAMING
NTS

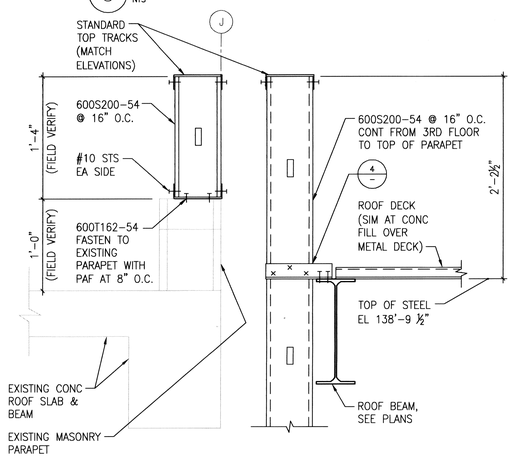

6 PARAPET WALLS AT GRID J
1 1/2"=1'–0"

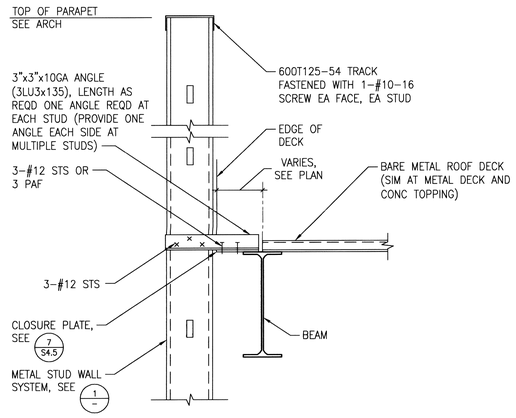

4 TYPICAL METAL STUD ATTACHMENT AT ROOF
1 1/2"=1'–0"

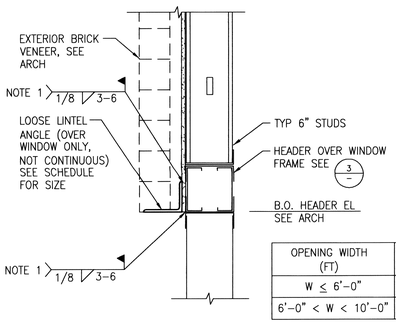

OPENING WIDTH (FT)	LOOSE LINTEL SIZE
W ≤ 6'–0"	L5x3 ½x5/16 (LLH)
6'–0" < W < 10'–0"	L5x5x⅜

NOTES:

1. WELD REQUIRED ONLY WHERE BRICK OPENING EXCEEDS 10'–0". OTHERWISE, PLACE ANGLE ON OUTSIDE FACE OF EXTERIOR WALL SHEATHING AND BEAR ENDS OF ANGLE ON BRICK JAMBS MINIMUM 4" EACH SIDE.

5 TYPICAL LOOSE LINTELS
1 1/2"=1'–0"

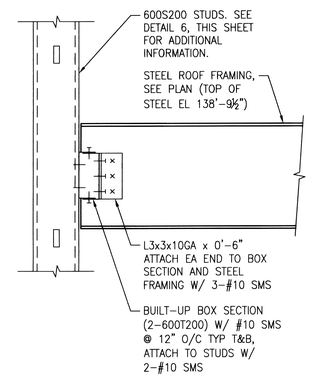

7 STUD WALL SUPPORT AT ROOF OPENING
1 1/2"=1'–0"

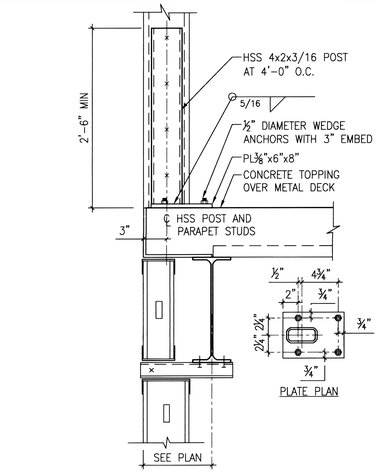

NOTE:
FOR INFORMATION NOT SHOWN SEE SECTION BELOW

SECTION AT CONCRETE ROOF SLAB

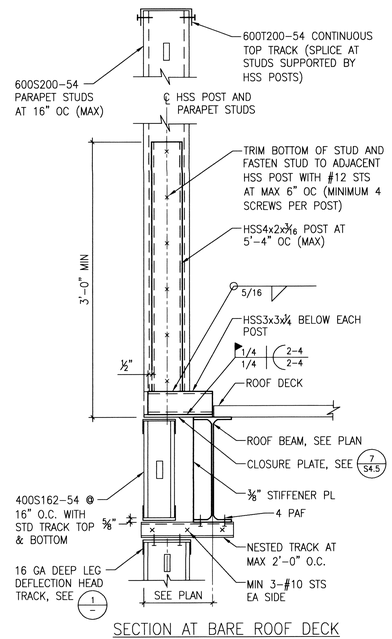

SECTION AT BARE ROOF DECK

8 PARAPET WALL SUPPORT
1 1/2"=1'–0"

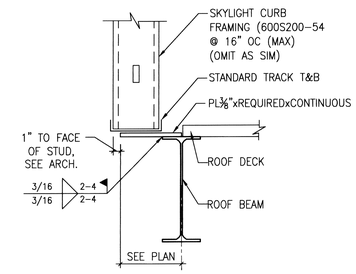

SECTION

9 EDGE OF DECK AT SKYLIGHT
1 1/2"=1'–0"

REVISIONS	DATE

CH2MHILL®
322 EAST FRONT STREET, SUITE 200, BOISE, ID 83702

PROFESSIONAL ENGINEER 7747 STATE OF IDAHO 11-1-11 HENRY B. SOELBERG

ZGA. Architects and Planners, Chartered
565 W. Myrtle Street, Suite 225 Boise, Idaho 83702-7606

CAD FILE NAME: 531–317_5.1.DWG
XREF FILE NAME: 531–317_xVAbord.DWG

DRAWING TITLE: BUILDING ENVELOPE DETAILS

PROJECT TITLE: REPLACE AND MODERNIZE SURGERY / INTENSIVE CARE UNIT

DATE: 11/01/2011
PROJECT NO. 531–317

APPROVED: CHIEF OF FACILITY MANAGEMENT SERVICE
APPROVED: MEDICAL CENTER DIRECTOR

BUILDING NUMBER: 85
CHECKED: KBS
DRAWN: LAH
LOCATION: VAMC BOISE, IDAHO

DRAWING NO. S5.2
DWG 74 OF 188

FOR CONSTRUCTION
DEPARTMENT OF VETERANS AFFAIRS

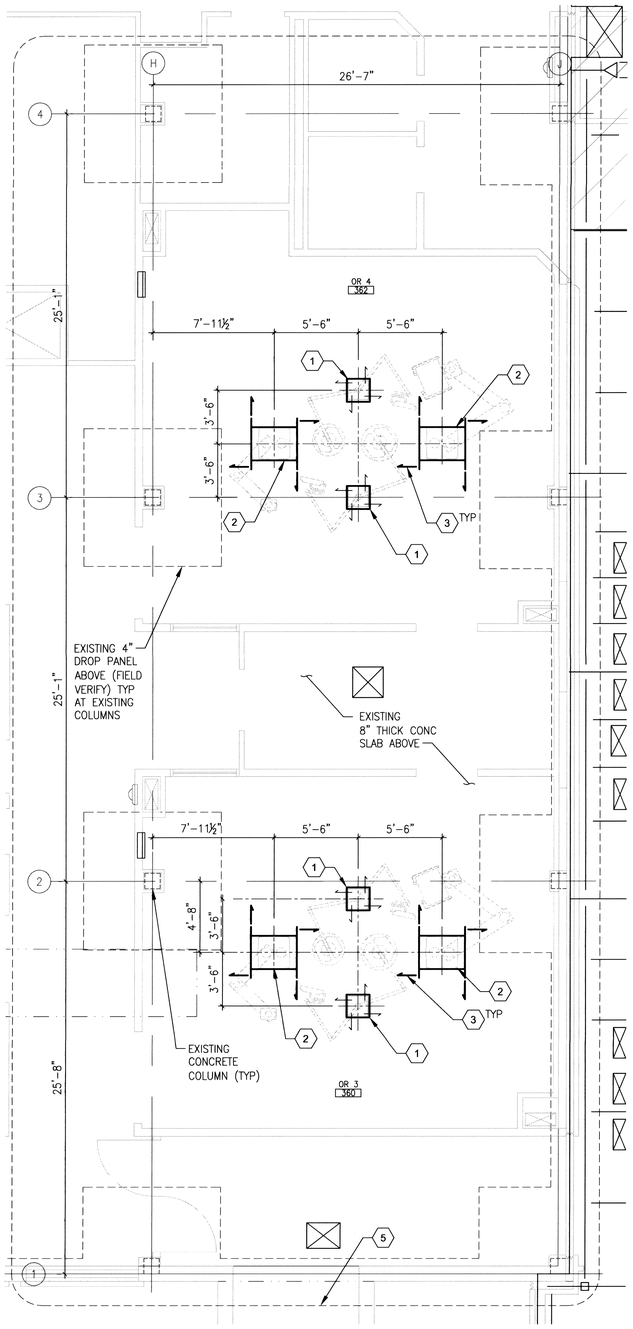

EXISTING MAIN ROOF STRUCTURE ABOVE SHOWN
TOC EL 138'-8" FIELD VERIFY

THIRD FLOOR CEILING MOUNTED EQUIPMENT PLAN
1/4"=1-0"

PLAN NORTH

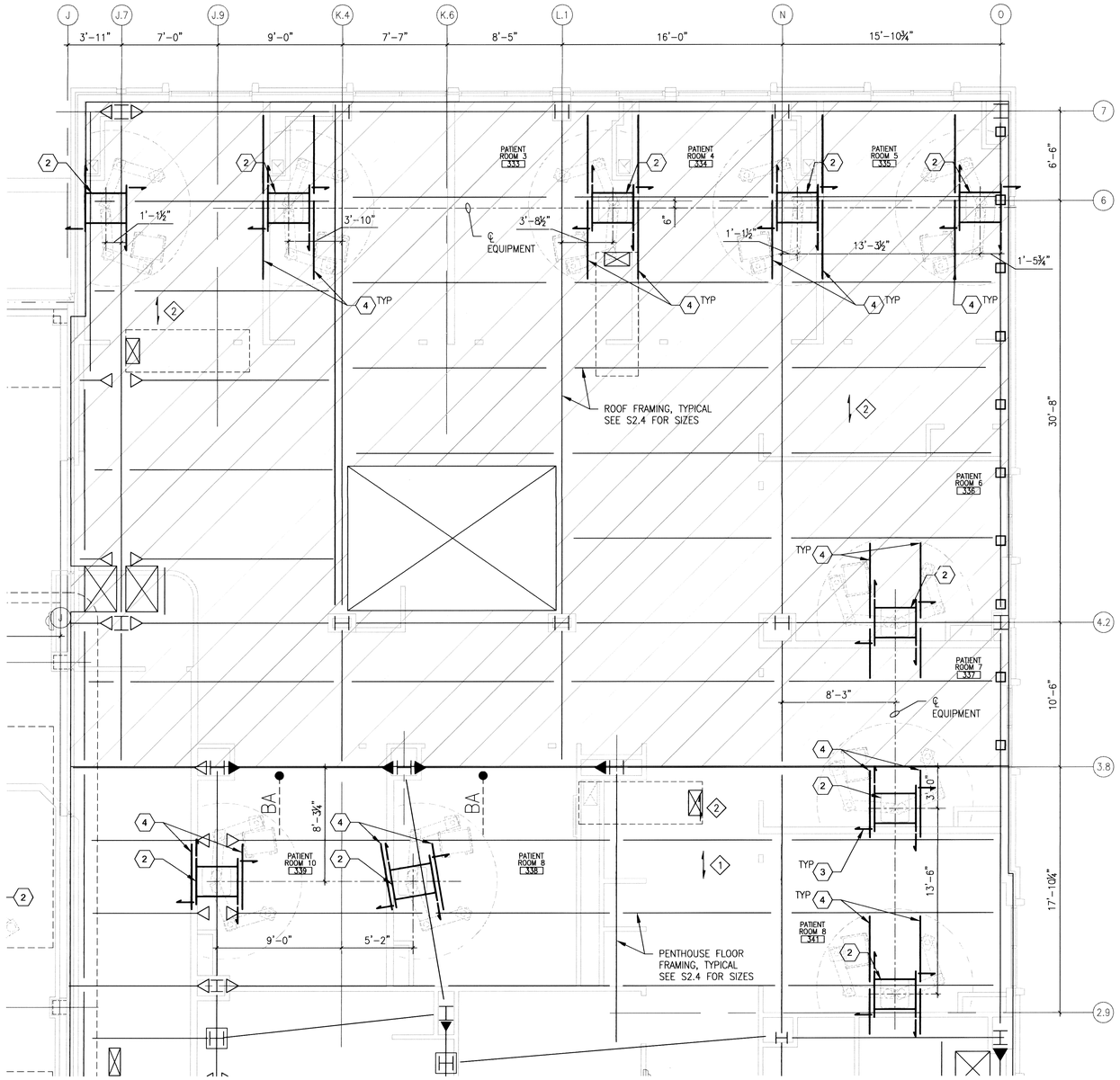

NEW MAIN ROOF/PENTHOUSE FRAMING ABOVE SHOWN
TOS EL 138'-9½"
TOC EL 138'-4"

THIRD FLOOR CEILING MOUNTED EQUIPMENT PLAN
1/4"=1-0"

PLAN NORTH

GENERAL SHEET NOTES

A. FOR GENERAL STRUCTURAL NOTES, ABBREVIATIONS, AND LEGEND SEE DRAWINGS S0.1 AND S0.2.

B. ALL DIMENSIONS ARE TO THE CENTERLINE OF MEMBERS, BACK FACE OF CHANNEL MEMBERS, OR FACE OF WALL.

C. DIMENSIONS SHOWN TO LOCATE MEDICAL EQUIPMENT SUPPORTS ARE FOR BID PURPOSES ONLY. CONTRACTOR SHALL COORDINATE EQUIPMENT MANUFACTURER FINAL SUBMITTALS WITH CONSTRUCTION DOCUMENTS. NOTIFY CONTRACTING OFFICER OF DISCREPANCIES PRIOR TO FABRICATION OR INSTALLATION OF SUPPORTS. COORDINATE ALL EQUIPMENT LOCATIONS WITH ARCHITECTURAL.

D. SEE DWG S6.2 AND S6.3 FOR TYPICAL CEILING MOUNTED EQUIPMENT SUPPORT DETAILS.

SHEET KEYNOTES

1. TRIUMPF LIGHT AND FLAT PANEL SUPPORT. SEE DETAIL 1 ON DWG S6.2
2. TRIUMPF EQUIPMENT BOOM SUPPORT. SEE DETAIL 4 ON DWG S6.2
3. ⟶ EQUIPMENT LATERAL BRACE LOCATION, SEE DETAIL 3 ON S6.2
4.][C8x11.5 THREADED ROD HANGER SUPPORT, SEE DETAILS 2 AND 3 ON DWG S6.3
5. FOR DEDUCT ALTERNATIVE NUMBER 5, OMIT WORK SHOWN

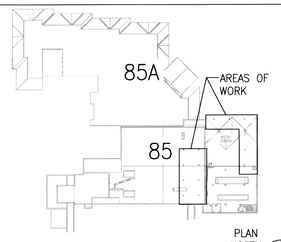

PLAN NORTH

ROOF/PENTHOUSE KEY PLAN
NOT TO SCALE

FOR CONSTRUCTION

REVISIONS	DATE

CH2MHILL®
322 EAST FRONT STREET, SUITE 200, BOISE, ID 83702

PROFESSIONAL ENGINEER 7747 STATE OF IDAHO KENT B. SOELBERG 11-1-11

ZGA. Architects and Planners, Chartered
565 W. Myrtle Street, Suite 225 Boise, Idaho 83702-7606

CAD FILE NAME: 531-317_S6.1.DWG
XREF FILE NAME: 85SPHFR.DWG 85SGRID.DWG 531-317_xVAbord.DWG

DRAWING TITLE: ENLARGED EQUIPMENT SUPPORT PLANS AND DETAILS

PROJECT TITLE: REPLACE AND MODERNIZE SURGERY / INTENSIVE CARE UNIT

DATE: 11/01/2011
PROJECT NO. 531-317

APPROVED: CHIEF OF FACILITY MANAGEMENT SERVICE
APPROVED: MEDICAL CENTER DIRECTOR

BUILDING NUMBER 85 | CHECKED KBS | DRAWN LAH

LOCATION: VAMC BOISE, IDAHO

DRAWING NO. S6.1
DWG 75 OF 188

DEPARTMENT OF VETERANS AFFAIRS