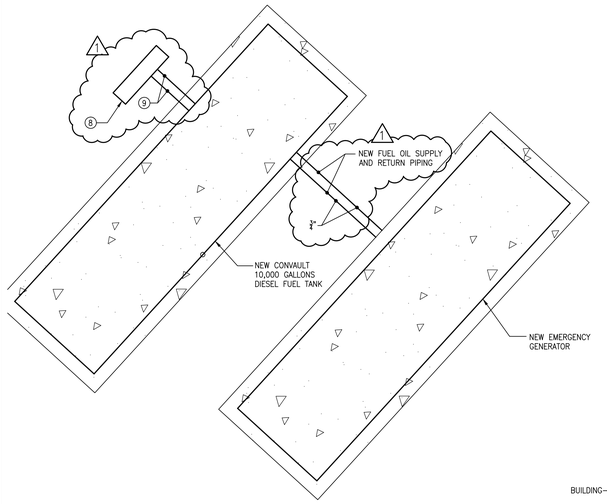


## KEYED NOTES–NEW WORK

1. PROVIDE NEW FUEL OIL PUMP PACKAGE. BASIS OF DESIGN IS SIMPLEX SKS-30-ED, DUPLEX PUMP SYSTEM (3-P1 & 3-P2) , 1/2 HP MOTOR, 7 GPM @ 50 PSI, 3 PHASE, 208 VOLT, THE CONTROLS, VALVES AND ACCESSORIES PACKAGE BY THE PUMP MANUFACTURER. INSTALL THE UNIT AS PER MANUFACTURER'S RECOMMENDATIONS.
2. INSTALL NEW FUEL OIL SUPPLY AND RETURN PIPING. PROVIDE PIPE SUPPORT AS REQUIRED (TYPICAL).
3. INSTALL NEW FRP FUEL OIL SUPPLY AND RETURN PIPING MIN. 3'-0" BELOW GRADE LEVEL. PROVIDE DOUBLE WALL CONTAINMENT PIPING WITH LEAK DETECTION SYSTEMS (TYPICAL).
4. NEW GENERATOR, 2000 KW CAPACITY.
5. PROVIDE LEAK DETECTION SYSTEMS FOR DOUBLE CONTAINMENT FUEL OIL SUPPLY AND RETURN PIPING. THE SYSTEM SHALL BE CABLE OF SENSING THE OIL LEAK IN THE UNDERGROUND OIL SUPPLY AND RETURN PIPING. PROVIDE LEAK SENSORS, CONTROL WIRING, CONTROL AND DISPLAY PANEL. CONNECT THE SYSTEM/ALARM SHALL GO TO BUILDING-3 MAINTENANCE OFFICE VIA DDC CONTROL. PROVIDE POWER CONNECTION AS REQUIRED. INSTALL THE UNIT AS PER MANUFACTURER'S RECOMMENDATION AND PROVIDE WEATHER PROOF ENCLOSURE. PROVIDE POWER CONNECTION AS REQUIRED. BASIS OF DESIGN IS VEEDER-ROOT MANUFACTURING (TYPICAL).
6. PROVIDE LEAK DETECTION SYSTEMS FOR ABOVE GROUND OIL TANK AND DOUBLE CONTAINMENT FUEL OIL PIPING. THE SYSTEM SHALL BE CABLE OF SENSING THE OIL LEAK IN THE TANK, SPACE BETWEEN THE TANK'S DOUBLE WALL AND UNDERGROUND OIL SUPPLY AND RETURN PIPING. PROVIDE LEAK SENSORS, CONTROL WIRING, CONTROL AND DISPLAY PANEL. CONNECT THE SYSTEM/ALARM SHALL GO TO BUILDING-3 MAINTENANCE OFFICE VIA DDC CONTROL. PROVIDE POWER CONNECTION AS REQUIRED. INSTALL THE UNIT AS PER MANUFACTURER'S RECOMMENDATION. BASIS OF DESIGN IS VEEDER-ROOT MANUFACTURING (TYPICAL).
7. FUEL OIL PIPING (TYPICAL).
8. FUEL OIL CONDITIONING/FILTERING SYSTEMS. PROVIDE WEATHER PROOF ENCLOSURE AND UNIT SUPPORT AS REQUIRED. INSTALL CONCRETE PAD AND EXTEND THE CONCRETE PAD 4" BEYOND UNIT FOOT PRINT.
9. FUEL OIL PIPING TO CONDITIONING/FILTERING SYSTEMS.
10. 325 GALLON FUEL OIL DAY TANK WITH RETURN PUMP. BASIS OF DESIGN IS SIMPLEX MODEL SRS-325-C/2011/390, PACKAGED FUEL OIL DAY-TANK, 1 HP PUMP MOTOR, 208V/3PH/60HZ, 17 GPM AT 50 PSI, 1725 RPM. 1.5 KW HEATER. PROVIDE PUMP, VALVES, ACCESSORIES, FITTING, CONTROLS, PANES, ETC., AS REQUIRED. PROVIDE 4" HIGH CONCRETE PAD AND EXTEND 4" BEYOND THE UNIT FOOT PRINT. PROVIDE WEATHER PROOF ENCLOSURE AND INSTALL THE UNIT AS PER MANUFACTURER RECOMMENDATIONS. PROVIDE MECHANICALLY ACTIVATED OVER-FILL CONTROL VALVE.
11. PROVIDE CABINET TYPE-TRANSITION SUMP.

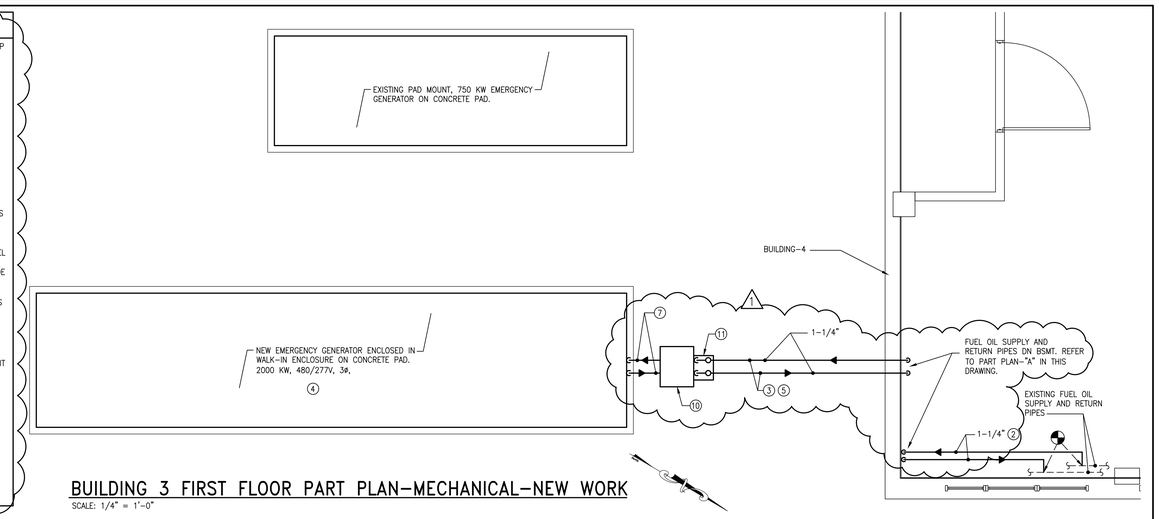


## BUILDING 3 FIRST FLOOR PART PLAN–MECHANICAL–NEW WORK

SCALE: 1/4" = 1'-0"

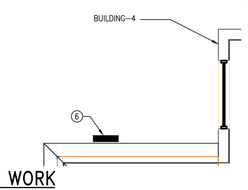


## BUILDING-4 PART PLAN–MECHANICAL–NEW WORK

SCALE: 1/4" = 1'-0"

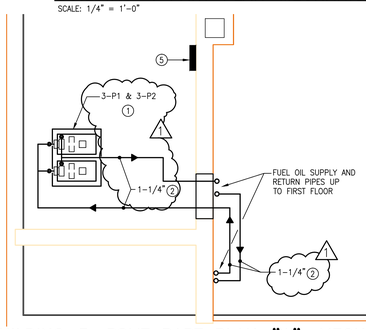


## BUILDING-3, BSMT PART PLAN–"A", MECHANICAL–NEW WORK

SCALE: 1/4" = 1'-0"

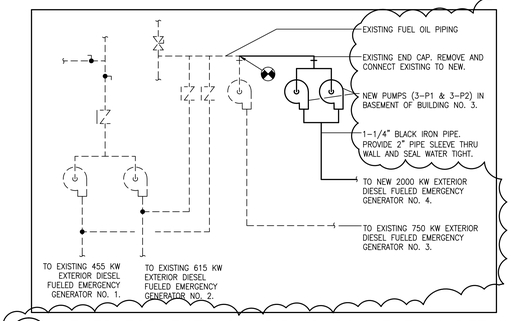


## 1 (3-1-M1) GENERATOR FUEL OIL PIPING CONNECTION DETAIL

(BUILDING-3 FUEL OIL SYSTEMS) SCALE: NOT TO SCALE

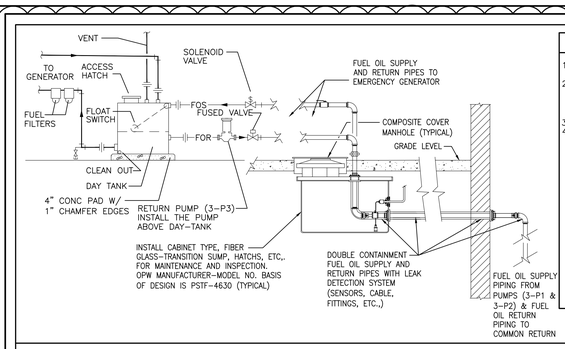


### NOTES

1. PROVIDE FLOAT ACTIVATED OVERFILL VALVE IN THE SUPPLY LINE TO PREVENT OVERFLOW.
2. PROVIDE ANTI-SIPHON CONTROL SYSTEM FOR SUPPLY PIPING WITH ELECTRONIC LINE LEAK SENSORS/DECTECTION SYSTEMS (LIQUID SENSOR). PROVIDE FLOAT TYPE LEVEL GAUGE.
3. DO NOT INSTALL FOOT VALVE.
4. THE CONTRACTOR SHALL INSTALL THE DAY TANK, PIPING, ACCESSORIES AND FITTINGS, ETC. PROVIDE ALL COMPONENT IN COMPLIANCE WITH APPLICABLE CODES AND REGULATIONS, AND NOT LIMITED TO,
   - FLOAT SWITCHES FOR THE DAY TANK CONTROL UNIT WITH SETTINGS,
   - FLOAT SWITCHES RELAY LOGIC,
   - LEVEL INDICATORS,
   - WATER LEVEL INDICATORS,
   - CATCH-MENT BASIN FOR CONTROLLING DRIPPAGE DURING ROUTINE STICKING FOR WATER CONTENT,
   - FUEL QUALITY INDICATORS,
   - ACCURACY LEVEL INDICATORS.

AFTER SUBSTANTIAL COMPLETION OF THE SYSTEMS, THE ENTIRE SHALL BE INSPECTED AND CERTIFIED BY A REGISTERED FUEL SYSTEM ENGINEER.

## 2 (3-1-M1) DIAGRAMATIC LEAK DETECTION SYSTEM FOR FUEL OIL PIPING DETAIL

(FROM EXISTING UNDERGROUND FUEL OIL TANK TO GENERATOR)

SCALE: NOT TO SCALE

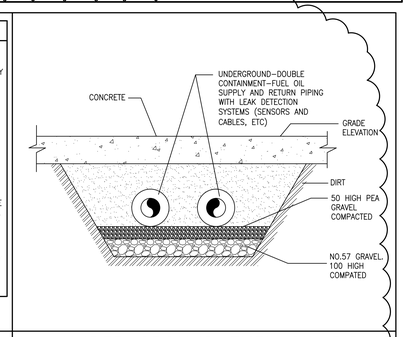


## 3 (3-1-M1) UNDER GROUND FUEL OIL PIPING INSTALLATION DETAIL

SCALE: NOT TO SCALE

### NOTES

1. PROVIDE ANTI-SIPHON CONTROL SYSTEM FOR SUPPLY PIPING WITH ELECTRONIC LINE LEAK SENSORS/DECTECTION SYSTEMS (LIQUID SENSOR).
2. PROVIDE MANUAL RELIEF VENT FOR FUEL OIL PIPING SYSTEM.
3. PROVIDE FUEL OIL CONDITIONING SYSTEM TO TURN OVER THE FUEL IN TANKS ON A ROUTINE BASIS FOR THE RECOVERY OF WATER AS WELL AS FILTERABLE SOLIDS. THE CONTRACTOR SHALL INSTALL THE FUEL OIL CONDITIONING SYSTEM, PIPING, FITTINGS, ACCESSORIES AND CONTROL, ETC, PROVIDE ALL FEATURES AND COMPONENTS IN COMPLIANCE WITH APPLICABLE CODES AND REGULATIONS.
4. THE CONTRACTOR SHALL COORDINATE WITH TANK MANUFACTURER FOR ALL TANK FITTINGS AND PORT LOCATIONS.
5. THE CONTRACTOR SHALL INSTALL THE FUEL OIL TRANSFER SYSTEM, PIPING, SENSORS, CABLES, PROBES, WIRING, LEAK DETECTION SYSTEM, ACCESSORIES AND FITTINGS, ETC. PROVIDE ALL FEATURES AND COMPONENTS IN COMPLIANCE WITH APPLICABLE CODES AND REGULATIONS,
6. AFTER SUBSTANTIAL COMPLETION OF THE SYSTEMS, THE ENTIRE SHALL BE INSPECTED AND CERTIFIED BY A REGISTERED FUEL SYSTEM ENGINEER.

### FUEL OIL TRANSFER PUMPS (3-P1, 3-P2 & 3-P3 ) SEQUENCE

- THE PUMP, 3-P1 (OR) 3-P2 SHALL ENERGIZE, WHEN DAY-TANK, T-1'S LEVEL IS @ L-A
- THE PUMP, 3-P3 SHALL ENERGIZE WHEN TANK, T-1'S LEVEL IS @ L-C.
- THE PUMP, 3-P1 (OR) 3-P2 SHALL DE-ENERGIZE WHEN TANK, T-1'S LEVEL IS @ L-B

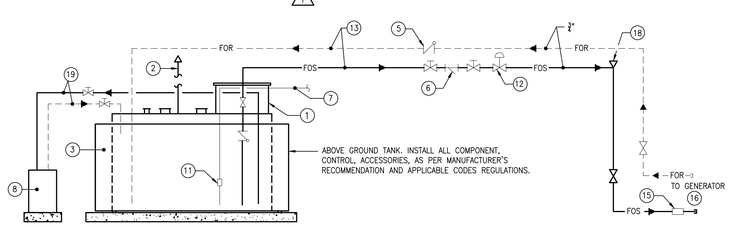


## 4 (3-1-M1) DIAGRAMATIC FUEL OIL SYSTEM FLOW DIAGRAM

(BUILDING-4 FUEL OIL SYSTEMS)

SCALE: NOT TO SCALE

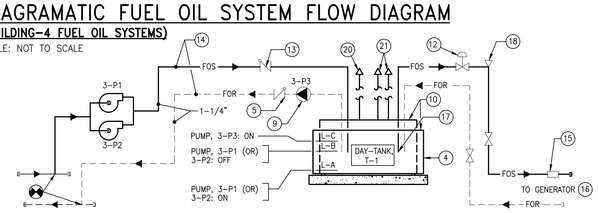


## 5 (3-1-M1) DIAGRAMATIC FUEL OIL SYSTEM FLOW DIAGRAM

(BUILDING-3 FUEL OIL SYSTEMS) SCALE: NOT TO SCALE

### FUEL OIL SYSTEM FLOW DIAGRAM–KEYED NOTES

1. FUEL DISPENSER PUMP/ASSEMBLY.
2. 3" EMERGENCY VENT.
3. ABOVE GROUND FUEL OIL STORAGE TANK. COORDINATE WITH MANUFACTURER FOR PROPER TANK SUPPORT INSTALLATION.
4. DAY-TANK. INSTALL AS PER UNIT MANUFACTURER RECOMMENDATIONS.
5. 1" OVERFLOW WITH CHECK VALVE (TYPICAL).
6. STRAINER, BASIS OF DESIGN IS KECKELLY MFR. CO.-MODEL NUMBER 2845-3001S, STAINLESS STEEL MATERIALS, 20 WIRE MESH. THE CONTRACTOR SHALL INSTALL THE STRAINERS AS PER RECOMMENDED INDUSTRY PRACTICES, WITH APPLICABLE CODE AND REGULATIONS (TYPICAL).
7. 3", PIPE TO FUEL OIL FILL PORT ASSEMBLY.
8. FUEL OIL CONDITIONTIONING/FILTRATION SYSTEMS. BASIS OF DESIGN IS SIMPLEX SFG-7C-A, 7 GPM FLOW, ½ MOTOR CAPACITY.
9. OVERFLOW RETURN PUMP, 17 GPM AT 50 PSI, 1 HP, 208V, 3 PHASE. BASIS OF DESIGN IS SIMPLEX MFR. COMPANY.
10. DAY TANK. DOUBLE WALL WEATHER PROOF CONSTRUCTION.
11. ABOVE GROUND STORAGE TANK-OVER FILL PREVENTION VALVE.
12. NORMALLY CLOSED SOLENOID VALVE. INTERLOCKED WITH GENERATOR'S FUEL PUMP. CLOSES WHEN FUEL PUMP IS DE-ENERGIZE (TYPICAL).
13. SWING CHECK VALVE.
14. FUEL OIL SUPPLY AND RETURN PIPING (TYPICAL).
15. FUEL FILTER. MODEL & MFR CO: BASIS OF DESIGN IS CIM-TEK, PART # 70016, MODEL NO. # 400-30, ADAPTER PART # 50032, ALUMINUM MATERIALS (TYPICAL).
16. FUEL OIL PIPING TO GENERATOR (TYPICAL).
17. FOS LINE 8" ABOVE BOTTOM OF TANK.
18. ANTI-SIPHON VALVE (TYPICAL).
19. 1" DIA. FUEL OIL PIPING TO CONDITIONTIONING/FILTRATION SYSTEMS.
20. 2" DIA. VENT PIPING. 4" DIA. NORMAL VENTS. INSTALL THE AS PER MANUFACTURER'S RECOMMENDATION AND APPLICABLE CODES AND REGULATIONS.
21. 4" DIA. NORMAL VENTS. INSTALL THE AS PER MANUFACTURER'S RECOMMENDATION AND APPLICABLE CODES AND REGULATIONS.

## FUEL MANAGEMENT SYSTEM FUNCTIONS:

THE FUNCTION OF THE FMS SYSTEM IS TO REPRESENT LEVELS FOR INVENTORY AND TANK LEAK TESTING BY MONITORING PROBE INPUTS AND PERFORMING CALCULATIONS BASED ON THOSE INPUTS. RESULTS FROM THESE CALCULATIONS WILL BE USED FOR SYSTEM MONITORING AND/OR REGULATORY COMPLIANCE. THE CONSOLE, IN CONJUNCTION WITH EXTERNAL FUEL SYSTEM EQUIPMENT, PROVIDE POSITIVE SYSTEM SHUTDOWN, BASED ON PROGRAMMED RULES.

THE FMS SYSTEMS WILL MONITOR AND PERFORM FOLLOWING:

* TANK INVENTORY LEVEL INFORMATION,
* TANK LEAK DETECTION.
* SENSOR CONFIGURATION.
* SUMP LEAK DETECTION,
* COMPLIANCE LEAK TESTING.
* MONITOR DAY-TANK WATER LEVEL,
* LOW LEVEL ALARM,
* HIGH LEVEL ALARM,
* TANK LEAK ALARM

FMS SHALL GENERATE AND PRINT THE FOLLOWING REPORTS:

* INVENTORY REPORTS,
* DELIVERY REPORTS,
* TANK TEST REPORTS,
* SCALED TESTING REPORTS,
* REGULATORY REPORTS,
* SENSOR REPORTS.

* REQUIRES 120VAC 60HZ POWER
* CONSOLE ENCLOSURE NEMA-1.
* HIGH AND LOW LED'S
* HORN 85 dB.

### NOTE

1. OVERFILL ALARM SHALL GENERATE ALARM WHEN TANK VOLUME IS AT 90% OF FULL CAPACITY, AND SHALL AUTO-SHUTOFF (CONTROL VALVE) WHEN 95% OF FULL TANK CAPACITY.

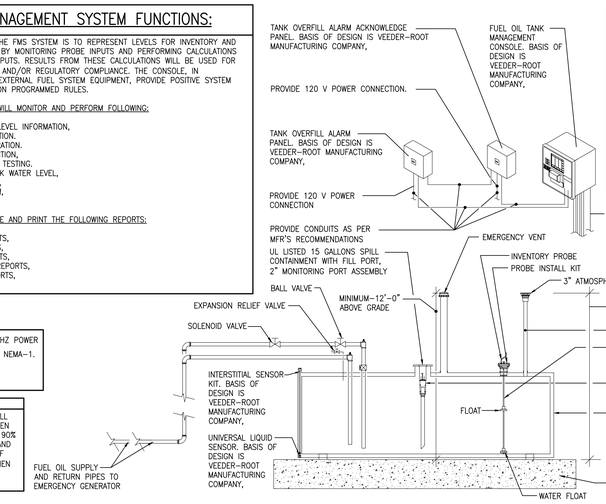


THE CONTRACTOR SHALL INSTALL THE ABOVE GROUND OIL TANK, PIPING, SENSORS, CABLES, MAGNETO-RESTRICTIVE PROBES, RELIEF VALVES/VENT, GAUGES, WIRING, LEAK DETECTION SYSTEM, TRANSITION SUMPS, ACCESSORIES AND FITTINGS, ETC. PROVIDE ALL FEATURE AND COMPONENTS AND ACCESSORIES IN COMPLIANCE WITH APPLICABLE CODE AND REGULATIONS, AND NOT LIMITED TO,

- REMOTE MONITORING (OR) REPORTING,
- DOUBLE WALL LEAK DETECTIONS,

AFTER SUBSTANTIAL COMPLETION OF THE SYSTEMS, THE ENTIRE SHALL BE INSPECTED AND CERTIFIED BY A REGISTERED FUEL SYSTEM ENGINEER.

## 6 (3-1-M1) DIAGRAMATIC FUEL OIL MANAGEMENT SYSTEMS DETAIL FOR ABOVEGROUND FUEL OIL TANK

SCALE: NOT TO SCALE (BUILDING-3 & 4 FUEL OIL SYSTEMS)

| | |
|---|---|
| 1 REVISION NO. 1-FUEL SYSYTEM | 03-08-12 |
| BID DOCUMENTS | 09-26-11 |
| 95% - CONSTRUCTION DOCUMENTS | 09-06-11 |
| 75% - CONSTRUCTION DOCUMENTS | 08-11-11 |
| 50% - DESIGN DEVELOPMENT SUBMISSION | 07-08-11 |
| 25% - SCHEMATIC SUBMISSION | 06-09-11 |
| Revisions | Date |

ARCHITECT/ENGINEERS:


CVA Culpeper Veterans Associates

CULPEPER VETERANS ASSOCIATES
14801 MURDOCK STREET, SUITE 135A,
CHANTILLY, VA. 20151-1017
(703) 955-7160 FAX (703) 914-1420


Professional Seal

James E. Van Zandt Veterans Administration Medical Center

| | | | |
|---|---|---|---|
| Drawing Title: BUILDING #3 - MECHANICAL - NEW WORK | Project Title: 480 VOLT POWER DISTRIBUTION EMERGENCY SYSTEM UPGRADES | | Date: 9-26-2011 |
| | | | Project No. 503-10-123 |
| Scale: AS NOTED | Building Number: 3 | Checked: SN / Drawn: MN | Drawing No. 3-1-M1 |
| Approved: | Location: ALTOONA, PA | | Dwg. 19 of 19 |

VA ALTOONA — Department of Veterans Affairs

VA FORM 08-6231, OCT 1978