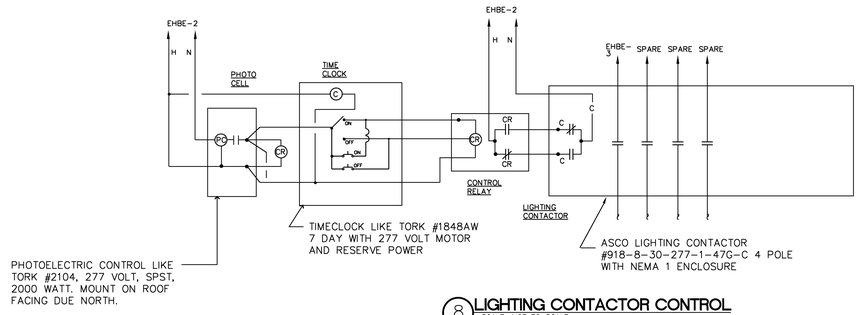

8 LIGHTING CONTACTOR CONTROL
SCALE: NOT TO SCALE

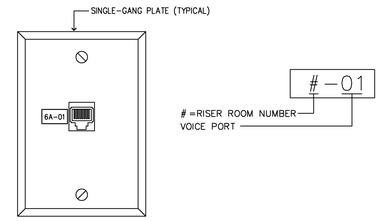

6 WALL PHONE RECEPTACLE DETAIL
SCALE: NOT TO SCALE

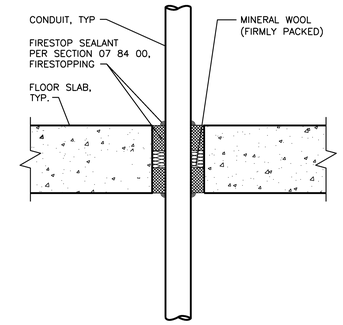

3 FLOOR SLAB PENETRATION DETAIL
SCALE: NOT TO SCALE

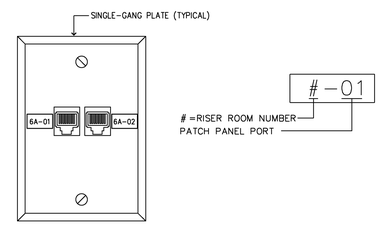

5 DUPLEX DATA RECEPTACLE DETAIL
SCALE: NOT TO SCALE

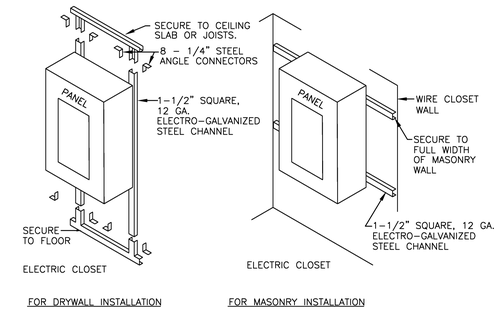

2 TYPICAL PANELBOARD SURFACE MOUNTING
SCALE: NOT TO SCALE

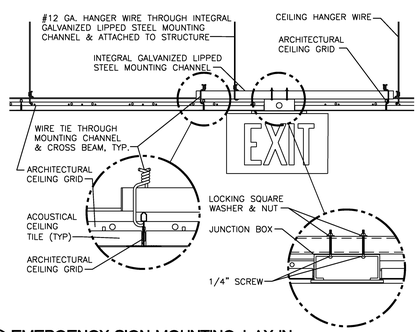

7 EMERGENCY SIGN MOUNTING-LAY IN
SCALE: NOT TO SCALE

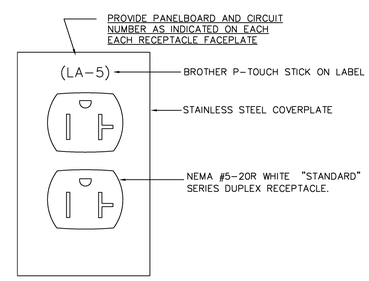

4 DUPLEX RECEPTACLE DETAIL
SCALE: NOT TO SCALE

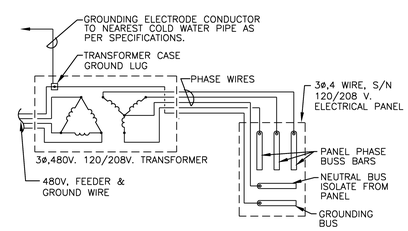

1 TRANSFORMER GROUNDING DETAIL
SCALE: NOT TO SCALE

"ISSUED FOR BIDS"- FULLY SPRINKLERED

SCHEMATIC DESIGN SUBMISSION	08/02/10
DESIGN DEVELOPMENT SUBMISSION	09/03/10
CONSTRUCTION DOCUMENT SUBMISSION	11/22/10
ISSUE FOR BIDS	12/19/11
Revisions:	Date

CONSULTANTS:

Date: 12-19-11

Burns, DeLatte & McCoy, Inc.
Texas Registered Engineering Firm F-685

ARCHITECT/ENGINEERS:

WILSON ARCHITECTURAL GROUP
5051 WESTHEIMER, SUITE 1800 HOUSTON, TEXAS 77056 TELEPHONE (713) 621-6714

MEP ENGINEERS	BURNS DeLATTE AND McCOY, INC.
STRUCTURAL ENGINEERS	PINNACLE STRUCTURAL
FIRE PROTECTION ENGINEERS	PROTECTION DEVELOPMENT INC.
CIVIL ENGINEERS	BREWER AND ESCALANTE

Drawing Title: ELECTRICAL-DETAILS
NO SCALE

Approved: Project Director

Project Title: BUILDING 11 ADDITION AND INTERIOR RENOVATIONS

Location: WACO, TEXAS

Date: 19 DEC 2011 | Checked: FP | Drawn: JP

Project Number: 674A4-CSI-516

Building Number: 11

Drawing Number: 11 ES700 Dwg. of

Office of Construction and Facilities Management

Department of Veterans Affairs

VA FORM 08-6231