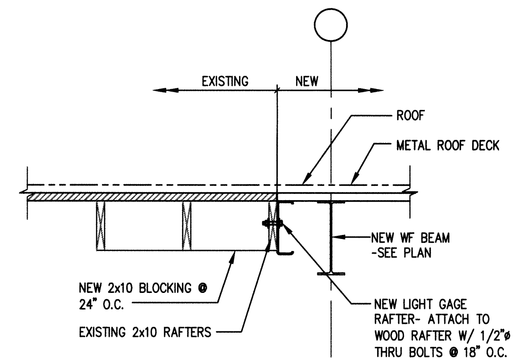

SCALE: 3/4" = 1'-0" 9

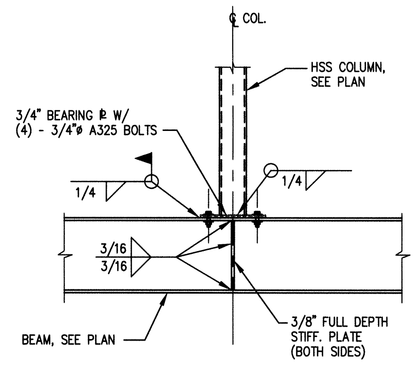

TYPICAL DETAIL
STUB COLUMN ON STEEL BEAM

NO SCALE 6

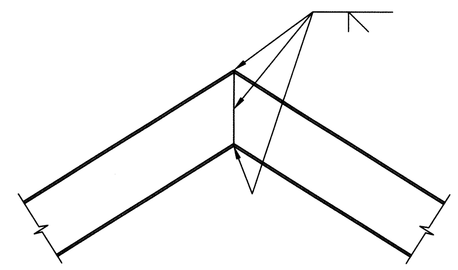

TYPICAL DETAIL
BENT BEAM

SCALE: 3/4" = 1'-0" 3

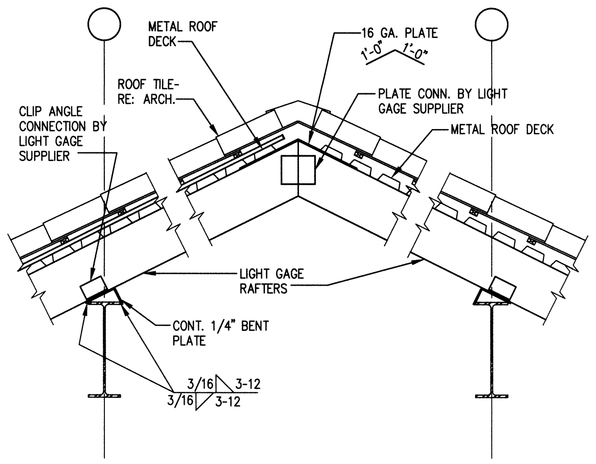

SCALE: 3/4" = 1'-0" 8

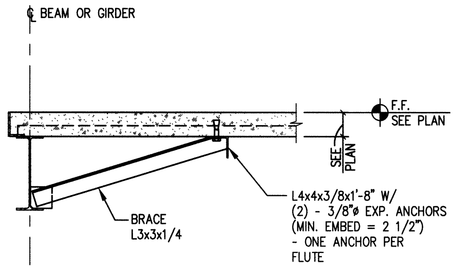

TYPICAL DETAIL
BEAM BOTTOM FLANGE BRACE
COMPOSITE CONSTRUCTION

NO SCALE 5

NOTE:
PROVIDE THRU-PLATE CONNECTION IN PLACE OF SHEAR TABS WHERE AISC REQUIREMENTS CANNOT BE SATISFIED

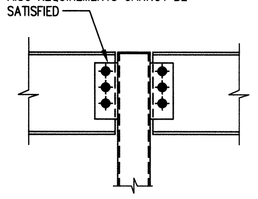

BEAM CONNECTING AT BOTH SIDES OF COL.

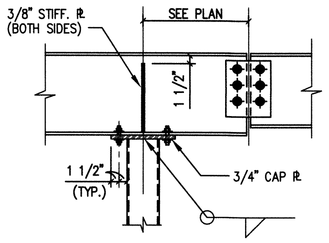

BEAM CANTILEVERING OVER COLUMN

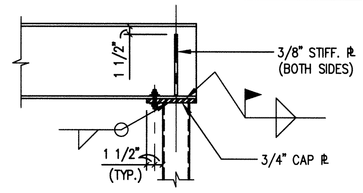

BEAM AT ONE SIDE OF COLUMN

TYPICAL DETAIL
STEEL BEAM TO HSS COLUMN CONNECTION

SCALE: 3/4" = 1'-0" 2

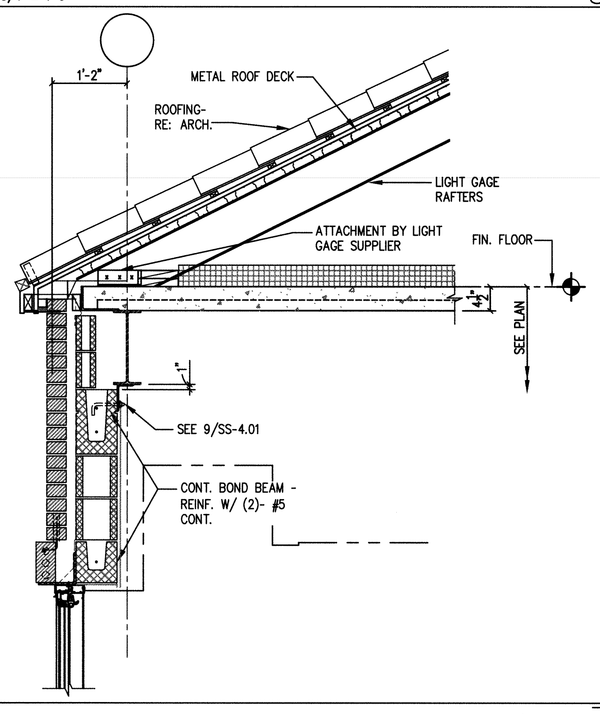

SCALE: 3/4" = 1'-0" 7

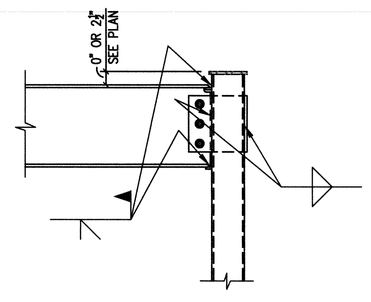

TYPICAL DETAIL
TUBE COLUMN TO BEAM
MOMENT CONNECTION

NO SCALE 4

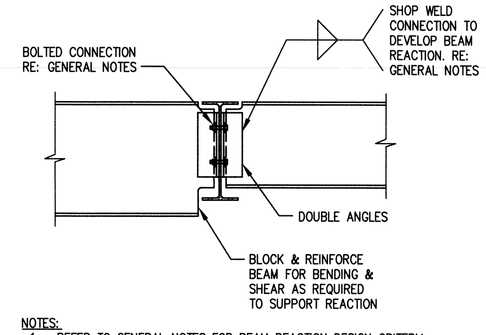

NOTES:
1. REFER TO GENERAL NOTES FOR BEAM REACTION DESIGN CRITERIA.
2. PROVIDE PRE-DESIGNED CONNECTIONS AS SHOWN IN AISC MANUAL PART 4 WHERE APPLICABLE.
3. REFER TO GENERAL NOTES FOR BOLT TYPE.

TYPICAL DETAIL
BEAM TO BEAM DOUBLE ANGLE
SHEAR CONNECTION

SCALE: 3/4" =1'-0" 1

NO SCALE 15

NO SCALE 14

NO SCALE 13

SCALE: 3/8" = 1'-0" 12

NO SCALE 11

NO SCALE 10

Revisions:	Date
SCHEMATIC DESIGN SUBMISSION	08/02/10
DESIGN DEVELOPMENT SUBMISSION	09/03/10
CONSTRUCTION DOCUMENT SUBMISSION	11/22/10
ISSUED FOR BIDS	12/19/11

CONSULTANTS:

PINNACLE STRUCTURAL ENGINEERS
TBPE FIRM REGISTRATION NO. F-8609
STATE OF TEXAS
DONALD GREIVE
65947
LICENSED
PROFESSIONAL ENGINEER
12-16-11

ARCHITECT/ENGINEERS:

WILSON ARCHITECTURAL GROUP
5051 WESTHEIMER, SUITE 200 HOUSTON, TEXAS 77056 TELEPHONE (713) 621-8714

MEP ENGINEERS	BURNS DeLATTE AND McCOY, INC.
STRUCTURAL ENGINEERS	PINNACLE STRUCTURAL
FIRE PROTECTION ENGINEERS	PROTECTION DEVELOPMENT INC.
CIVIL ENGINEERS	BREWER AND ESCALANTE

DO NOT SCALE THESE DRAWINGS. G.C. TO FIELD VERIFY DIMENSIONS

Drawing Title: FRAMING DETAILS

Approved: Project Director

Project Title: BUILDING 11 ADDITION & INTERIOR RENOVATIONS

Location: WACO, TEXAS

Date: 19 DEC 2011 | Checked | Drawn

"ISSUED FOR BIDS"

Project Number: 674A4-CSI-516

Building Number: 11

Drawing Number: 11-SS-4.02

Dwg. 7 of 7

FULLY SPRINKLERED

Office of Construction and Facilities Management

Department of Veterans Affairs

VA FORM 08-6231