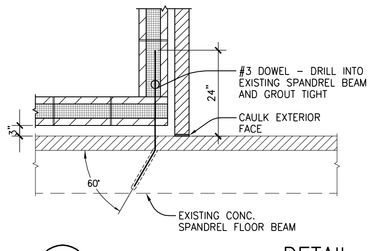

14 S1 DETAIL
SCALE: 1/2" = 1'-0

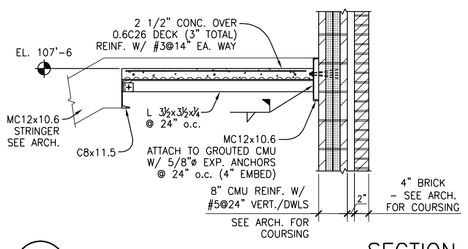

15 S1 SECTION
SCALE: 1/2" = 1'-0

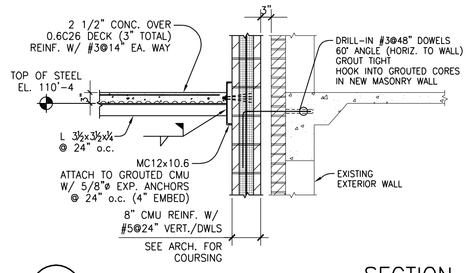

16 S1 SECTION
SCALE: 1/2" = 1'-0

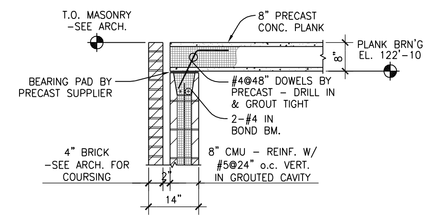

17 S1 SECTION
SCALE: 1/2" = 1'-0

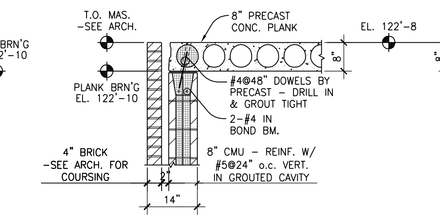

18 S1 SECTION
SCALE: 1/2" = 1'-0

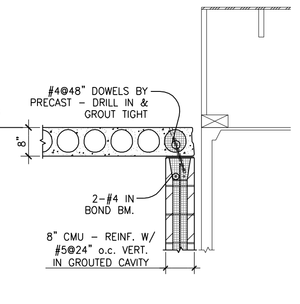

19 S1 SECTION
SCALE: 1/2" = 1'-0

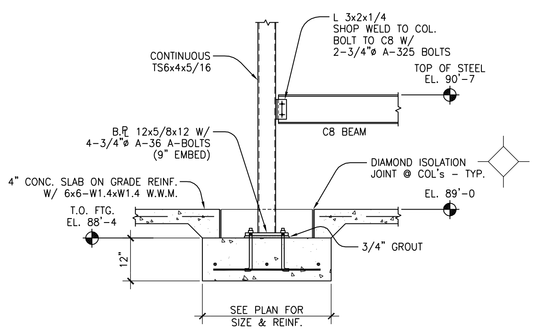

9 S1 SECTION
SCALE: 1/2" = 1'-0

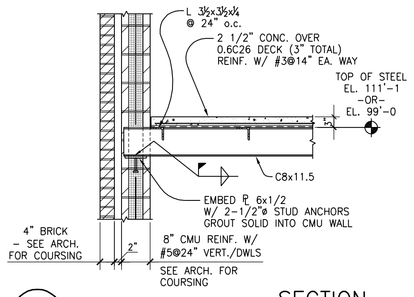

10 S1 SECTION
SCALE: 1/2" = 1'-0

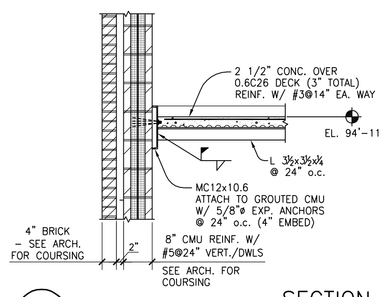

11 S1 SECTION
SCALE: 1/2" = 1'-0

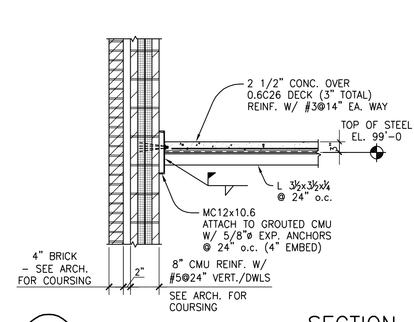

12 S1 SECTION
SCALE: 1/2" = 1'-0

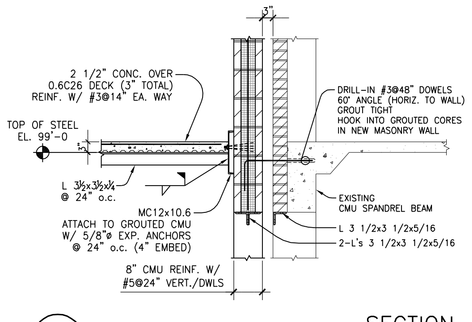

13 S1 SECTION
SCALE: 1/2" = 1'-0

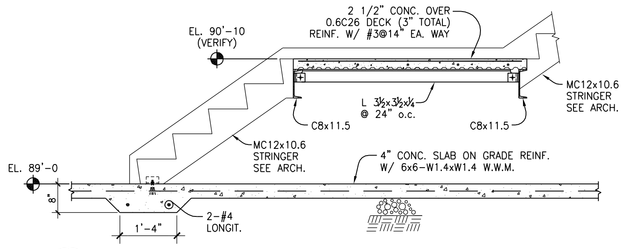

8 S1 SECTION
SCALE: 1/2" = 1'-0

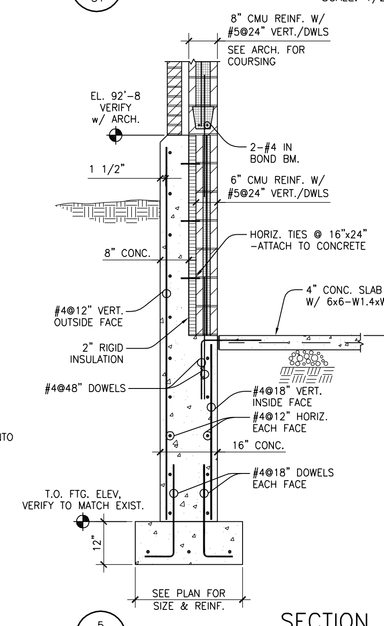

5 S1 SECTION
SCALE: 1/2" = 1'-0

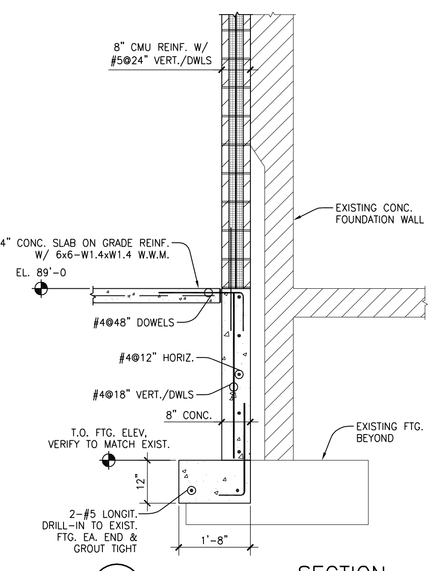

6 S1 SECTION
SCALE: 1/2" = 1'-0

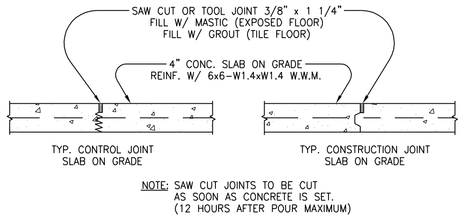

NOTE: SAW CUT JOINTS TO BE CUT AS SOON AS CONCRETE IS SET. (12 HOURS AFTER POUR MAXIMUM)

1 S1 SECTION

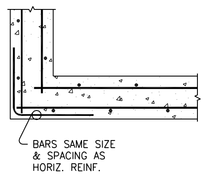

2 S1 DETAIL
TYP. CORNER WALL REINF.

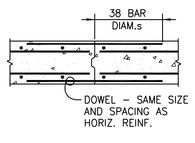

3 S1 DETAIL
TYP. CONSTRUCTION JOINT AT FOUNDATION WALL

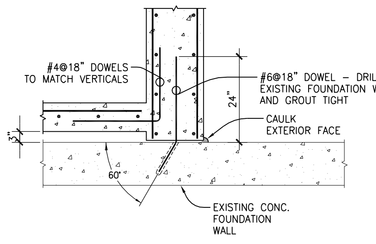

4 S1 DETAIL
SCALE: 1/2" = 1'-0

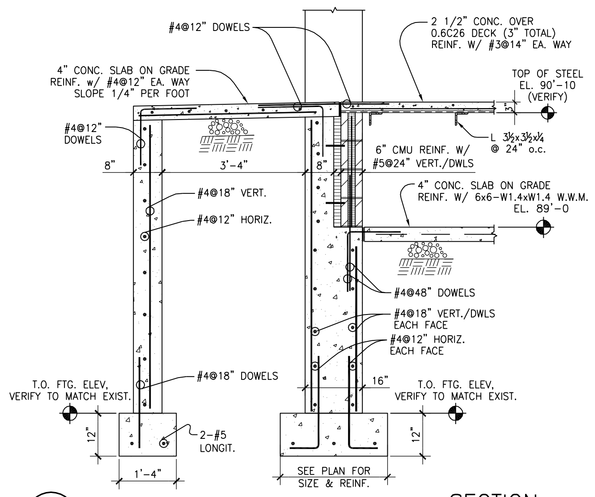

7 S1 SECTION
SCALE: 1/2" = 1'-0

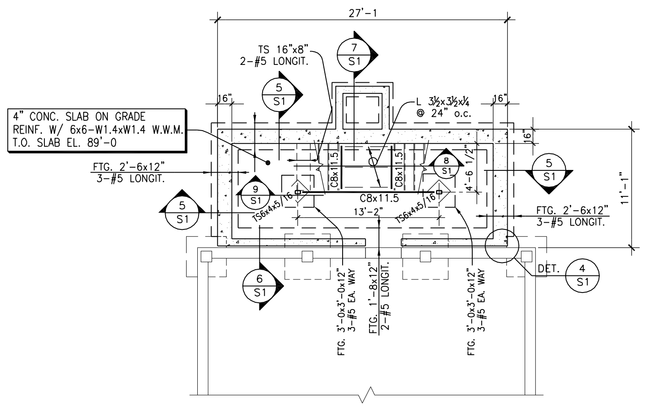

FOUNDATION PLAN
1/8"=1'-0"

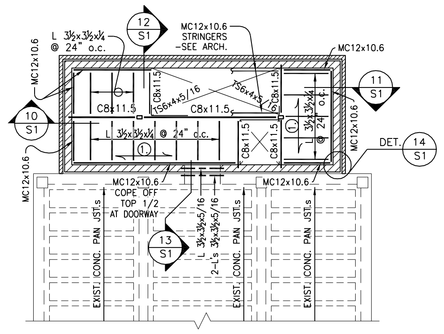

1st FLOOR FRAMING PLAN
1/8"=1'-0"

NOTE: 1 = 2 1/2" CONC. OVER 0.6C26 DECK (3" TTL.) REINF. W/ #3@14" o.c. EA. WAY

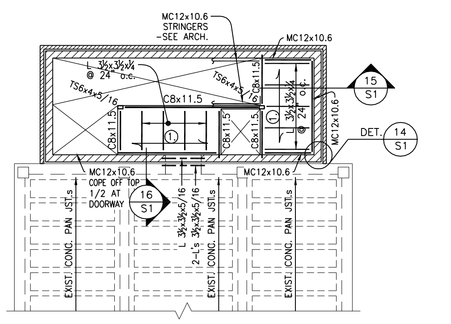

2nd FLOOR FRAMING PLAN
1/8"=1'-0"

NOTE: 1 = 2 1/2" CONC. OVER 0.6C26 DECK (3" TTL.) REINF. W/ #3@14" o.c. EA. WAY

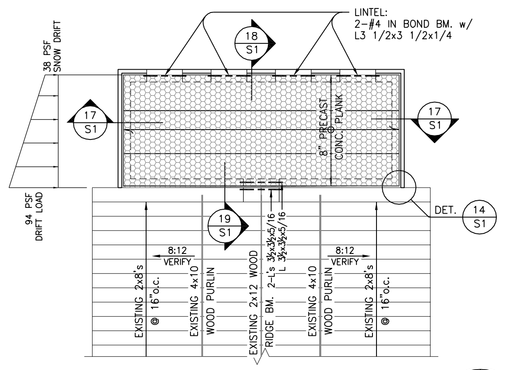

ROOF FRAMING PLAN
1/8"=1'-0"

GENERAL STRUCTURAL NOTES

1. Design Codes Used:
   IBC 2006
   ACI Concrete Code
   AISC Code
2. Design Live Loads:
   Roof Snow Load: Pg = 50 PSF; Pf = 40 PSF + Drift; Ce = 0.9; Is = 1.1; Ct = 1.0
   Stair: 100 PSF
   Wind: 90 MPH Basic Wind Speed; Iw = 1.15; Wind Exposure B; Internal Pressure Coefficient ±0.18
3. Design Stresses Used:

Concrete	
– Slabs on Grade	3000 PSI @ 28 days
– Footings and Foundation Walls	3000 PSI @ 28 days
– Exterior exposed	4000 PSI @ 28 days (air entrained)
Steel	
– W Shapes	Fy = 50 KSI (ASTM A992)
– Tubes	Fy = 46 KSI (ASTM A500 Grade B)
– Angles, Channels, Bars	Fy = 36 KSI (ASTM A36)
– Pipes	Fy = 35 KSI (ASTM A53)
Reinforcing Steel	60 KSI (ASTM A615–60)
Soil Bearing Pressure	4000 PSF (Assumed)

4. FOOTINGS to rest on undisturbed soil or engineered backfill. All walls and piers to center on footing unless otherwise noted. All footing elevations are given to the top of footings.
5. ALL FOUNDATION WALLS to be laterally supported before backfilling. Vertical construction joints to be keyed.
6. OPENINGS in concrete FOUNDATION WALLS shall be reinforced with 2–#5 bars each side, extending 2'-0 past the face of the opening unless otherwise noted.
7. CONCRETE COVERAGE for reinforcing shall be as follows:

Footings	3 inches
Columns and Piers	1 1/2 inches
Slabs on Grade	mid height for a single layer
Walls	1 1/2 inches @ exterior; 3/4 inch @ interior
Structural Slabs	3/4 inch unless noted

   PROVIDE BAR SUPPORTS AND SPACERS in accordance with the ACI Detailing Manual.
8. REINFORCING STEEL to be bent and placed in accordance with ACI code. All splices to be 38 bar diameters.
9. PROVIDE 25 lineal feet of L 3 1/2x3 1/2x5/16 to be used at the Achitect/Engineer's discretion.
10. MASONRY TO CONSIST OF ASTM C90 Hollow Core, Grade N, normal weight, Concrete Masonry Units. Joint reinforcing to be Ladder type formed from cold–drawn steel wire conforming to ASTM 82, consisting of deformed longitudinal rods with cross rods welded thereto at intervals not exceeding 16" o.c. Drip bend in cross rods at cavity wall construction. Width 2" less than nominal wall width, formed from 11–gauge rods at 1/4" joints and 9–gauge rods at other width joints. Provide in bed joints of all Masonry Walls at every 16" in Wall Height.
11. MORTAR TO BE Type S or Type M below grade and Type N elsewhere.
12. PROVIDE TEMPORARY BRACING during masonry erection. Maintain in place until Building Structure provides permanent bracing.
13. AT MASONRY CONTROL JOINTS do not continue horizontal joint reinforcement across control joints. In Exterior Walls provide vertical open joint at 24 feet on center maximum. In Interior Walls provide vertical open joint at 30 feet on center maximum.
14. ALL STRUCTURAL STEEL to be fabricated and erected in accordance with the AISC Code. Connections not detailed are to be designed by the fabricator in accordance with the AISC Textbook of structural shop drafting. Shop connections to be welded. Field connections to be bolted with 3/4 inch diameter high strength bolts (ASTM A325).
15. SEE MECHANICAL, ELECTRICAL & ARCHITECTURAL DRAWINGS for all openings and inserts not shown on the structural drawings. All opening sizes and locations to be verified with mechanical and electrical contractors.

I hereby certify that this plan, specification or report was prepared by me or under my direct supervision, and that I am a duly Licensed Professional Engineer under the laws of the State of Minnesota.

ROBERT P. DURK
Date 1/31/12 License No. 24625

No	REVISION	DATE

IMAGE GROUP
IMAGE GROUP INC., Architecture & Interiors
403 CENTER AVENUE, SUITE 300
MOORHEAD, MN 56560

SOLIEN & LARSON, PC
CONSULTING STRUCTURAL ENGINEERS
3330 FIECHTNER DRIVE, SUITE 206
FARGO, NORTH DAKOTA 58103
TELEPHONE (701) 235-5593 FAX (701) 235-5594

ONE BUILDING SYSTEMS CONSULTANTS
Fargo, ND • Grand Forks, ND • Minneapolis, MN
701.280.0500 • 701.775.3594 • 651.361.8728

Ulteig engineers
Bismarck • Detroit Lakes • Fargo • Minneapolis • Sioux Falls
3350 38th Avenue South
Fargo, North Dakota 58104

APPROVED: SERVICE LINE DIRECTOR — DATE:
APPROVED: INFECTION CONTROL NURSE — DATE:
APPROVED: SERVICE LINE DIRECTOR — DATE:
APPROVED: PATIENT SAFETY — DATE:
APPROVED: PROJECT'S SECTION MANAGER — DATE:
APPROVED: CHIEF OF POLICE — DATE:
APPROVED: DIRECTOR FMS — DATE:
APPROVED: SAFETY MANAGER — DATE:
APPROVED: CHIEF OF STAFF — DATE:
APPROVED: MEDICAL CENTER DIRECTOR — DATE:

DRAWING TITLE: FOUNDATION, 1ST FLOOR FRAMING, 2ND FLOOR FRAMING & ROOF FRAMING PLANS GENERAL STRUCTURAL NOTES SECTIONS & DETAILS

PROJECT TITLE: BUILDING 28 WEST STAIR TOWER ADDITION

BUILDING No 28	CHECKED BY RD	DRAWN WWW	
LOCATION: VA MEDICAL CENTER ST.CLOUD, MN 56303			

DATE: JANUARY 31, 2012
PLOT SCALE: SEE PLAN
PROJECT NO. 656-12-212
CAD FILE 11212-S1
DRAWING NO. S1 DWG. 7 OF 16

VAMC SAINT CLOUD MN