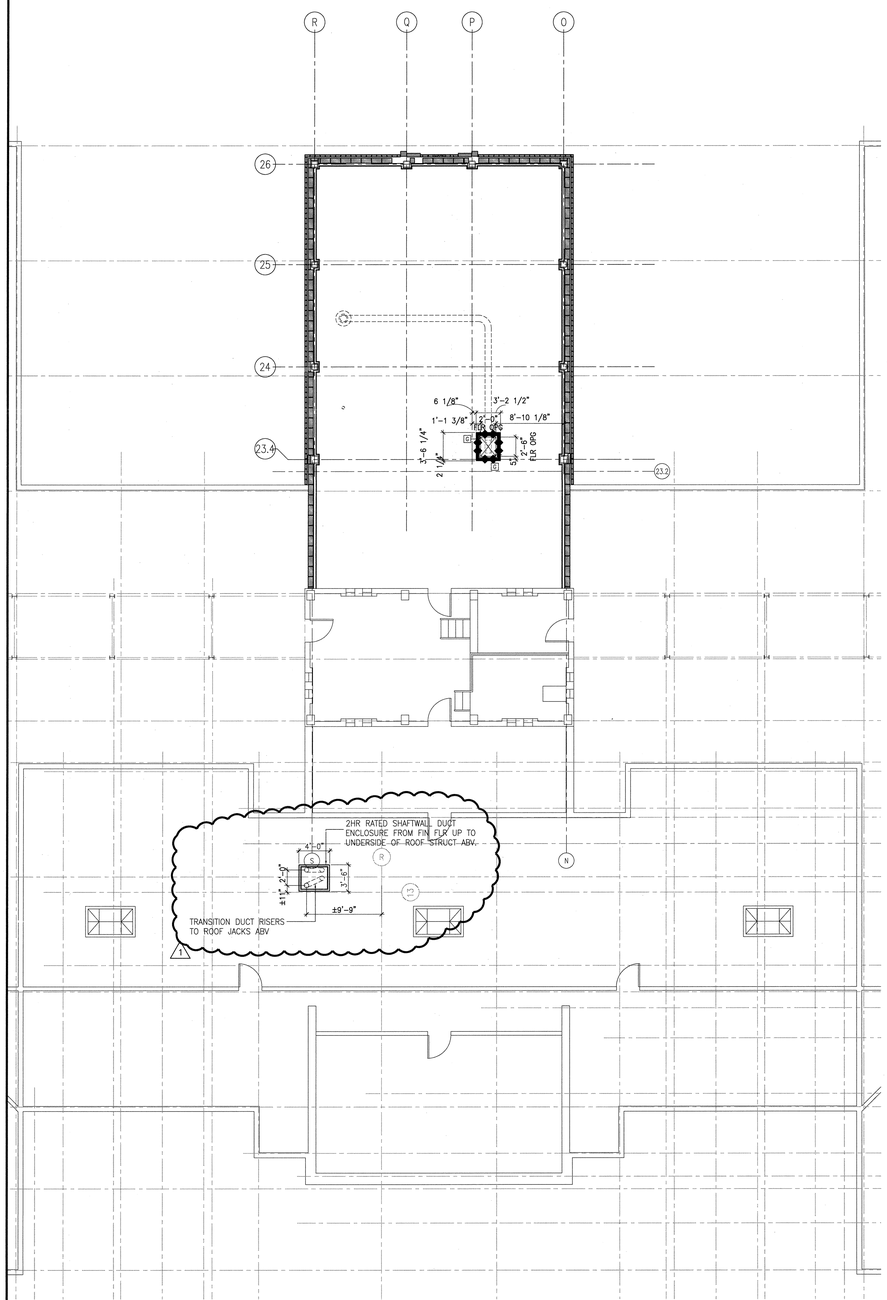

26 ATTIC PLAN

SCALE: 1/4"=1'-0"

FIN. FLR. = 596.53'

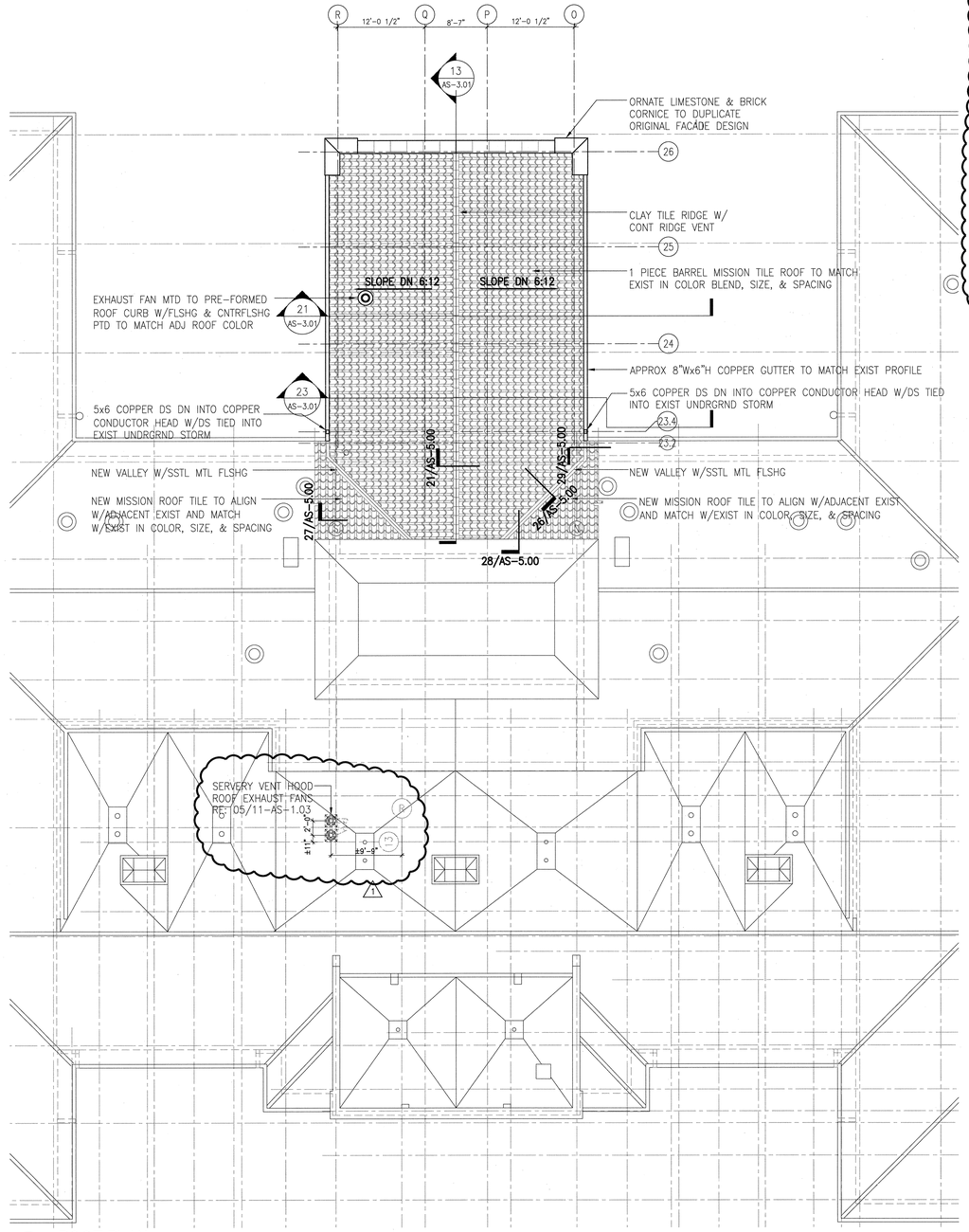

16 ROOF PLAN

SCALE: 1/4"=1'-0"

FIN. FLR. = 596.53'

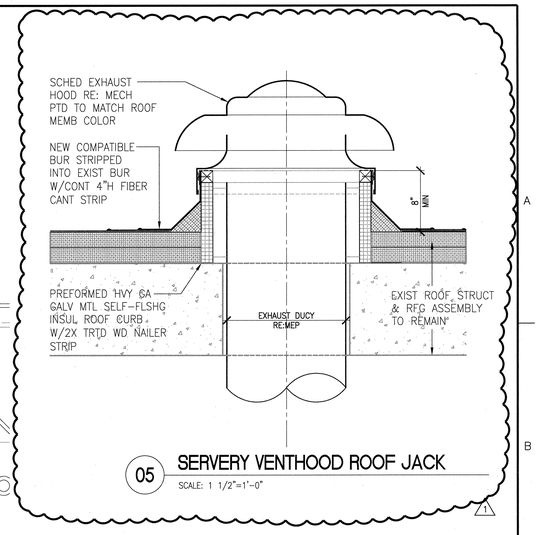

05 SERVERY VENTHOOD ROOF JACK

SCALE: 1 1/2"=1'-0"

1. REFER TO SHEET 11-AGI-0.01 FOR DEFINITIONS OF ABBREVIATIONS, SYMBOLS, AND MATERIALS IDENTIFICATIONS.
2. REFER TO SHEET 11-AS-3.00 FOR INFORMATION REGARDING TO EXTERIOR BUILDING ELEVATIONS

02 GENERAL NOTES

SCALE: N.T.S.

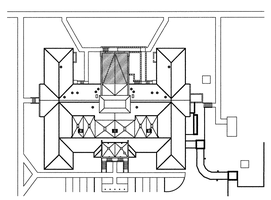

KEY PLAN

SCHEMATIC DESIGN SUBMISSION	08/02/10
DESIGN DEVELOPMENT SUBMISSION	09/03/10
CONSTRUCTION DOCUMENT SUBMISSION	11/22/10
ISSUED FOR BIDS	12/19/11
1 AMENDMENT NO. 04	04/05/12
Revisions:	Date

CONSULTANTS:

REGISTERED ARCHITECT THOMAS R. WILSON 8173 STATE OF TEXAS 4-4-12

ARCHITECT/ENGINEERS:

WILSON ARCHITECTURAL GROUP

5051 WESTHEIMER, SUITE 200 HOUSTON, TEXAS 77056 TELEPHONE (713) 621-6794

MEP ENGINEERS	BURNS DeLATTE AND McCOY, INC.
STRUCTURAL ENGINEERS	PINNACLE STRUCTURAL
FIRE PROTECTION ENGINEERS	PROTECTION DEVELOPMENT INC.
CIVIL ENGINEERS	BREWER AND ESCALANTE

DO NOT SCALE THESE DRAWINGS. G.C. TO FIELD VERIFY DIMENSIONS

"ISSUED FOR BIDS" AMENDMENT NO. 04 FULLY SPRINKLERED

Drawing Title: ROOF & ATTIC PLANS

Approved: Project Director

Project Title: BUILDING 11 ADDITION & INTERIOR RENOVATIONS

Location: WACO, TEXAS

Date: 19 DEC 2011

Checked

Drawn

Project Number: 674A4-CSI-516

Building Number: 11

Drawing Number: 11-AS-1.03R

Dwg. of

Office of Construction and Facilities Management

Department of Veterans Affairs

VA FORM 08-6231