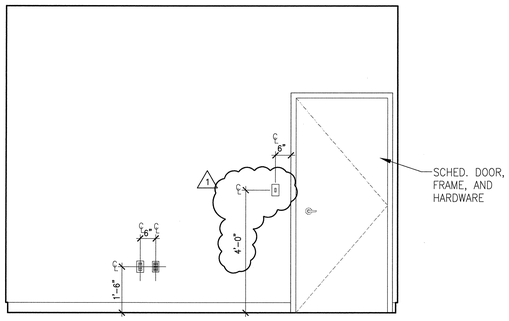

29 MEDICATION
SCALE: 1/2"=1'-0"

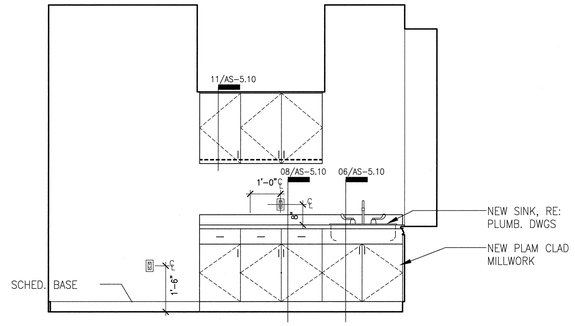

19 MEDICATION
SCALE: 1/2"=1'-0"

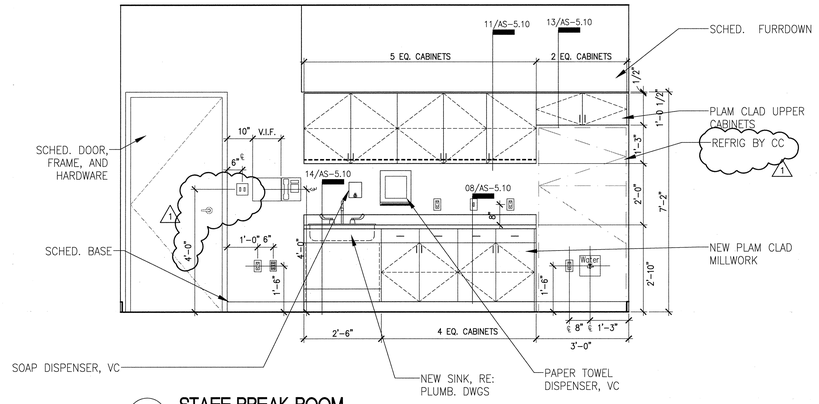

09 STAFF BREAK ROOM
SCALE: 1/2"=1'-0"

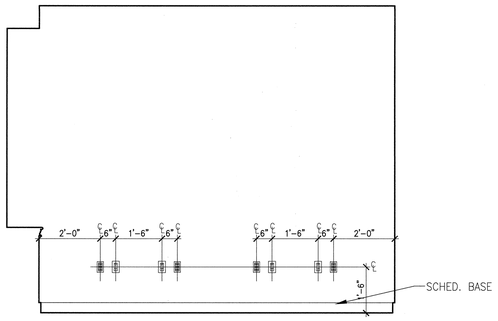

27 MEDICATION
SCALE: 1/2"=1'-0"

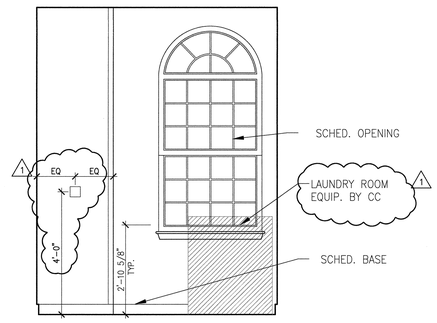

17 LAUNDRY
SCALE: 1/2"=1'-0"

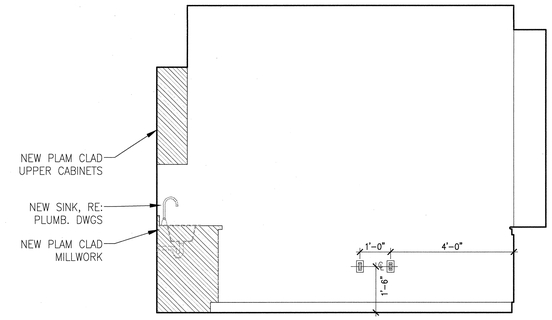

07 STAFF BREAK ROOM
SCALE: 1/2"=1'-0"

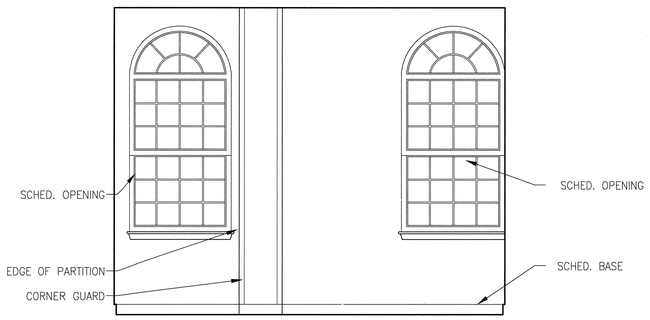

26 MEDICATION ROOM
SCALE: 1/2"=1'-0"

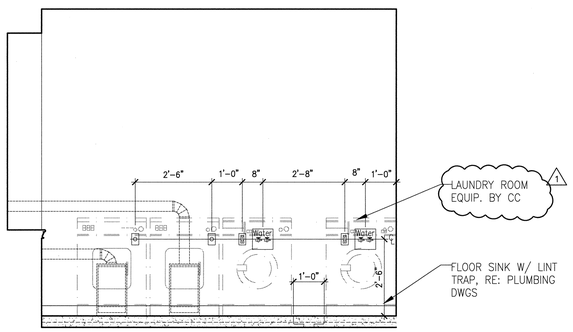

16 LAUNDRY
SCALE: 1/2"=1'-0"

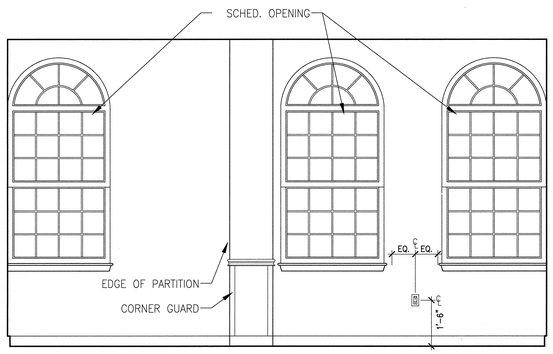

06 STAFF BREAK ROOM
SCALE: 1/2"=1'-0"

SCHEMATIC DESIGN SUBMISSION	08/02/10
DESIGN DEVELOPMENT SUBMISSION	09/03/10
CONSTRUCTION DOCUMENT SUBMISSION	11/22/10
ISSUED FOR BIDS	12/19/11
1 AMENDMENT NO. 04	04/05/12
Revisions:	Date

CONSULTANTS:

REGISTERED ARCHITECT THOMAS P. BROWN 8173 STATE OF TEXAS 4-4-12

ARCHITECT/ENGINEERS:

WILSON ARCHITECTURAL GROUP
5051 WESTHEIMER, SUITE 200 HOUSTON, TEXAS 77056 TELEPHONE (713) 621-8714

MEP ENGINEERS	BURNS DeLATTE AND McCOY, INC.
STRUCTURAL ENGINEERS	PINNACLE STRUCTURAL
FIRE PROTECTION ENGINEERS	PROTECTION DEVELOPMENT INC.
CIVIL ENGINEERS	BREWER AND ESCALANTE

DO NOT SCALE THESE DRAWINGS. G.C. TO FIELD VERIFY DIMENSIONS

"ISSUED FOR BIDS" AMENDMENT NO. 04 FULLY SPRINKLERED

Drawing Title: INTERIOR ELEVATIONS - SECOND FLOOR

Approved: Project Director

Project Title: BUILDING 11 ADDITION & INTERIOR RENOVATIONS

Location: WACO, TEXAS

Date: 19 DEC 2011 | Checked | Drawn

Project Number: 674A4-CSI-516

Building Number: 11

Drawing Number: 11-AS-2.06R

Dwg. of

Office of Construction and Facilities Management

Department of Veterans Affairs

VA FORM 08-6231