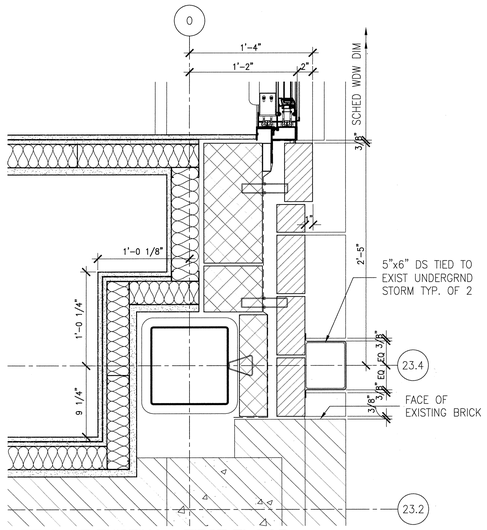

28 DETAIL AT EXISTING - FIRST FLOOR
SCALE: 1-1/2"=1'-0"

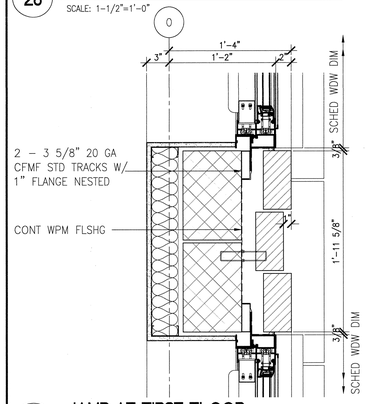

27 JAMB AT FIRST FLOOR
SCALE: 1-1/2"=1'-0"

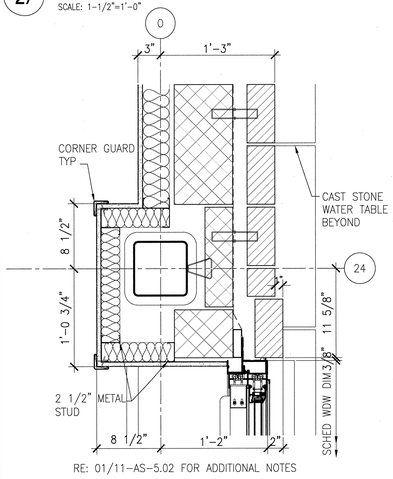

26 JAMB AT FIRST FLOOR
SCALE: 1-1/2"=1'-0"

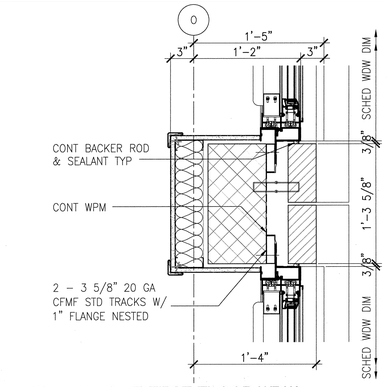

25 JAMB AT FIRST FLOOR WDW
SCALE: 1-1/2"=1'-0"

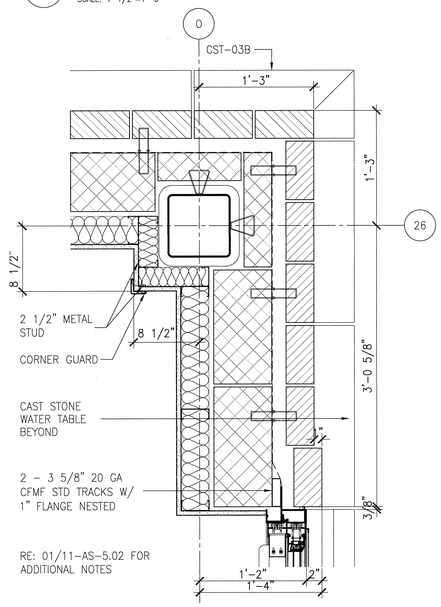

22 DETAIL AT FIRST FLOOR (EAST)
SCALE: 1-1/2"=1'-0"

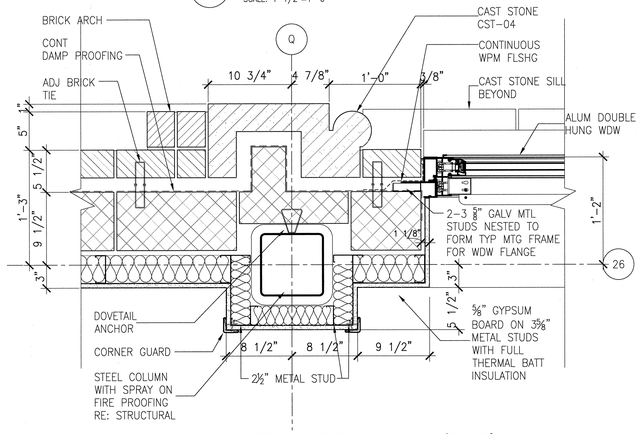

21 DETAIL AT FIRST FLOOR (EAST)
SCALE: 1-1/2"=1'-0"

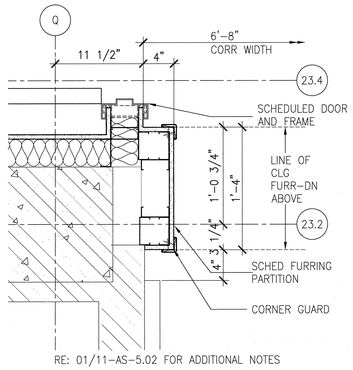

18 DETAIL AT EXISTING - BSMNT
SCALE: 1-1/2"=1'-0"

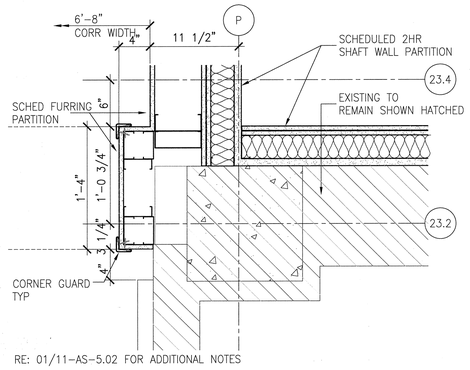

14 DETAIL AT EXISTING - BSMNT
SCALE: 1-1/2"=1'-0"

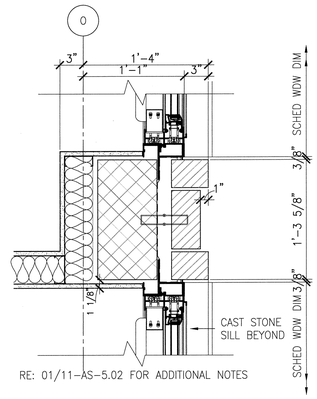

04 JAMB AT BSMNT WINDOW
SCALE: 1-1/2"=1'-0"

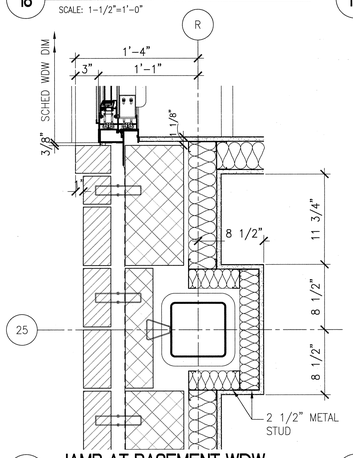

17 JAMB AT BASEMENT WDW
SCALE: 1-1/2"=1'-0"

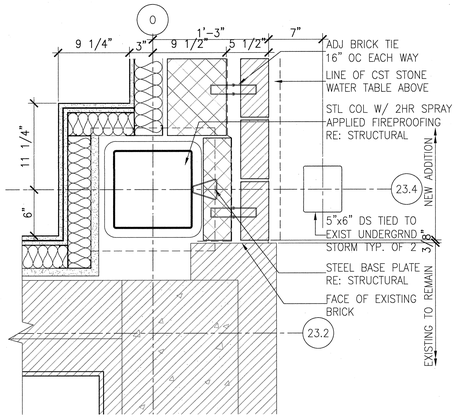

12 DETAIL AT EXISTING BASEMENT
SCALE: 1-1/2"=1'-0"

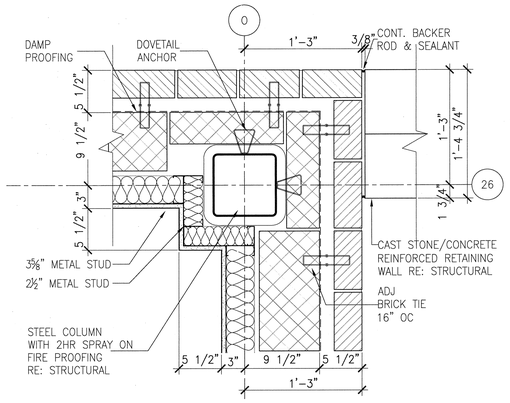

02 DETAIL AT RETAINING WALL
SCALE: 1-1/2"=1'-0"

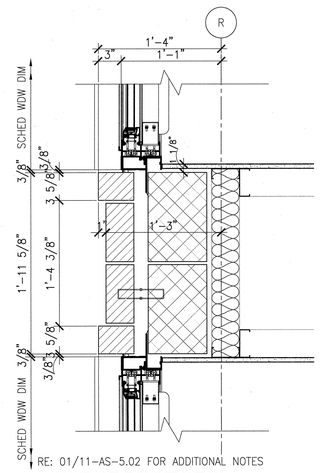

16 JAMB AT BSMNT WDW
SCALE: 1-1/2"=1'-0"

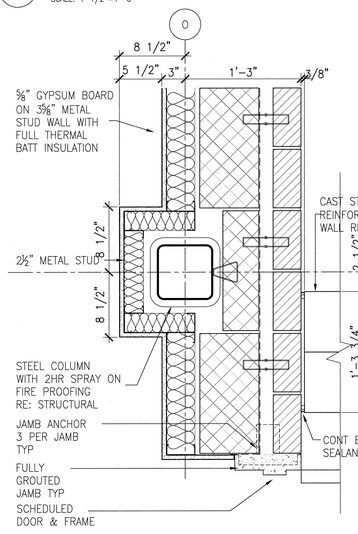

11 TYP DETAIL AT WINDOW
SCALE: 1-1/2"=1'-0"

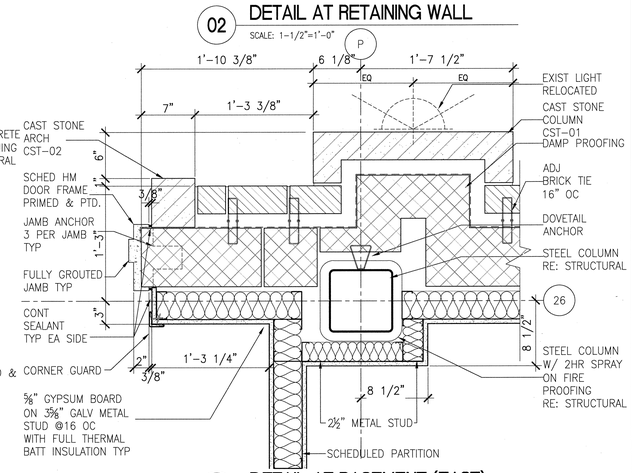

01 DETAIL AT BASEMENT (EAST)
SCALE: 1-1/2"=1'-0"

Revisions:	Date
SCHEMATIC DESIGN SUBMISSION	08/02/10
DESIGN DEVELOPMENT SUBMISSION	09/03/10
CONSTRUCTION DOCUMENT SUBMISSION	11/22/10
ISSUED FOR BIDS	12/19/11
1 AMENDMENT NO. 04	04/05/12

CONSULTANTS:

REGISTERED ARCHITECT THOMAS R. WILSON 8178 STATE OF TEXAS

ARCHITECT/ENGINEERS:

WILSON ARCHITECTURAL GROUP
5051 WESTHEIMER, SUITE 200 HOUSTON, TEXAS 77056 TELEPHONE (713) 621-6774

MEP ENGINEERS	BURNS DeLATTE AND McCOY, INC.
STRUCTURAL ENGINEERS	PINNACLE STRUCTURAL
FIRE PROTECTION ENGINEERS	PROTECTION DEVELOPMENT INC.
CIVIL ENGINEERS	BREWER AND ESCALANTE

DO NOT SCALE THESE DRAWINGS. G.C. TO FIELD VERIFY DIMENSIONS

Drawing Title: EXTERIOR PLAN DETAILS (1)

Approved Project Director

Project Title: BUILDING 11 ADDITION & INTERIOR RENOVATIONS

Location: WACO, TEXAS

Date: 19 DEC 2011 | Checked | Drawn

"ISSUED FOR BIDS" AMENDMENT NO. 04 FULLY SPRINKLERED

Project Number: 674A4-CSI-516

Building Number: 11

Drawing Number: 11-AS-5.02R

Dwg. of

Office of Construction and Facilities Management

Department of Veterans Affairs

VA FORM 08-6231