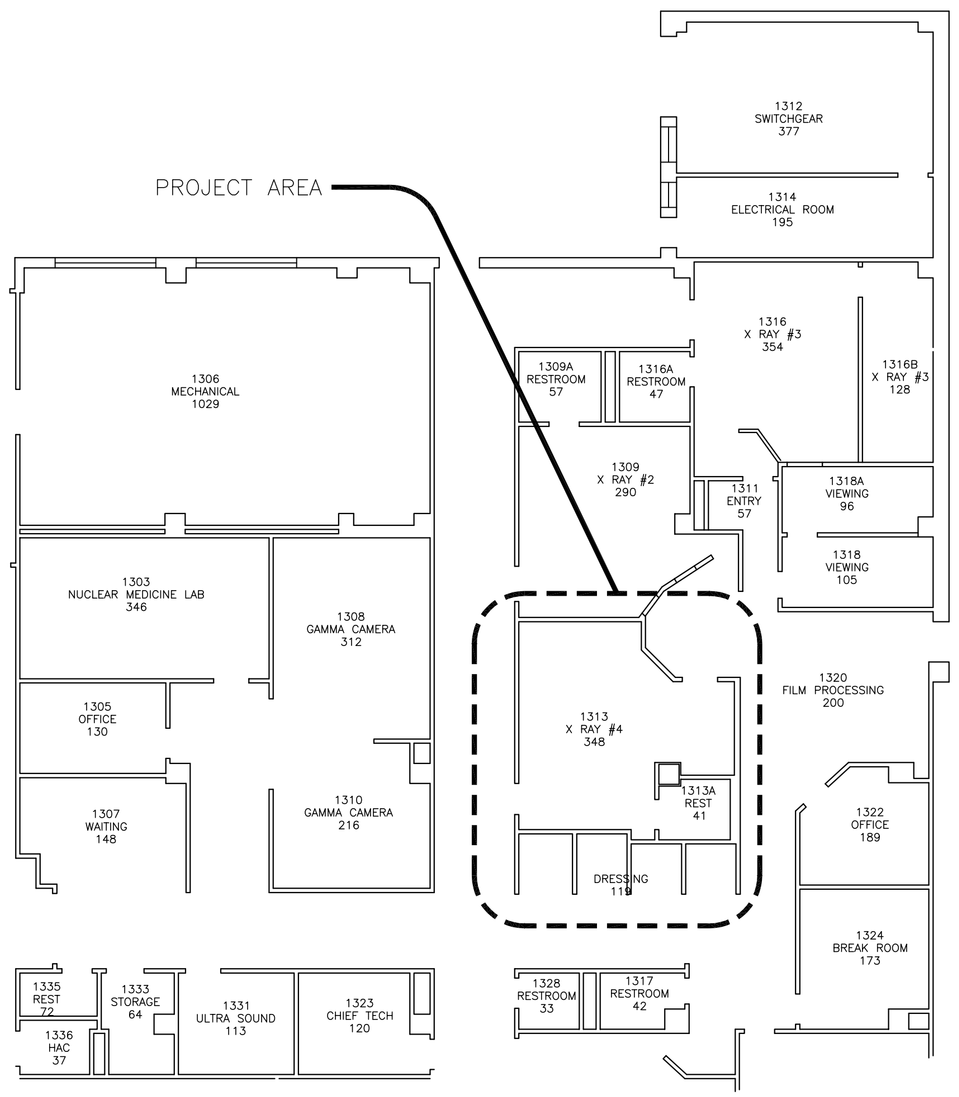

PARTIAL FLOOR PLAN OF BUILDING 28 FIRST FLOOR

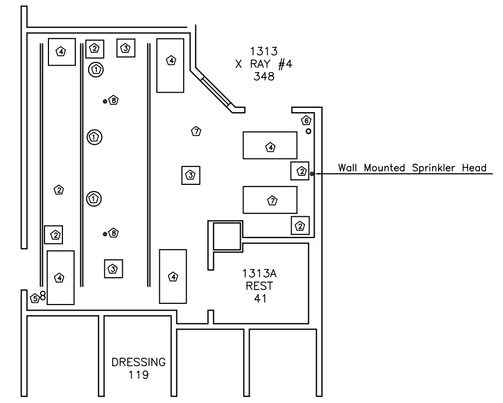

CEILING DEMOLITION

Scale: 1/8" = 1'

1. Can light to be removed and reinstalled.
2. Access panel to be removed and reinstalled.
3. Diffuser to be removed and reinstalled.
4. Fluorescent lights to be removed and reinstalled.
5. Telemetry antennas (2) to be removed and reinstalled.
6. Air pressure indicator to be removed and reinstalled.
7. Access panel to be removed and saved for reinstallation. Note ceiling recess for reinstallation.
8. Fire Sprinklers and Fire Protection System to be added, moved and tested as needed.

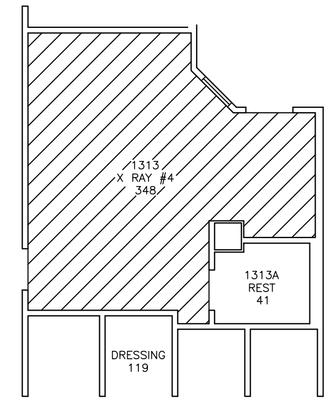

FLOOR DEMOLITION

Scale: 1/8" = 1'

1. Remove all vinyl composition tile and mastic.

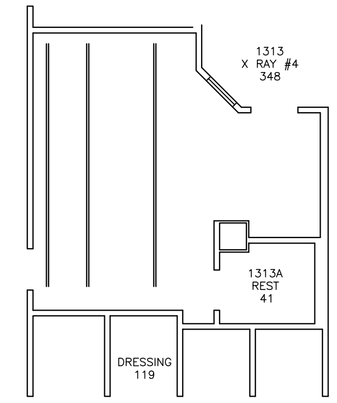

TUBE SUPPORT DEMOLITION

Scale: 1/8" = 1'

1. Remove all Unistrut material back to concrete deck above.

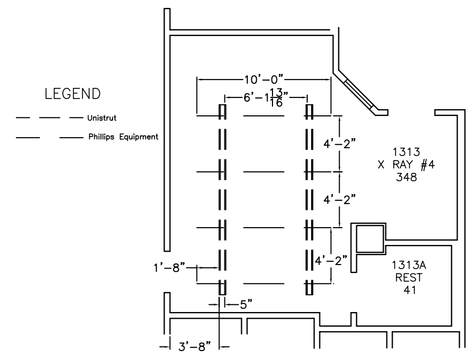

TUBE SUPPORT INSTALLATION

Scale: 1/8" = 1'

1. Phillips equipment mounting shown for reference only.
2. New support rails to be Unistrut P1001 or approved equal.
3. Finished ceiling to be 1/4" above bottom of the Unistrut.
4. Phillips mounting equipment is designed for P1001 Unistrut.
5. Inside of rail must be clear of all obstruction (including paint).
6. Tension Force is 956 lbs. per support.
7. Shear Force is 585 lbs. per support.

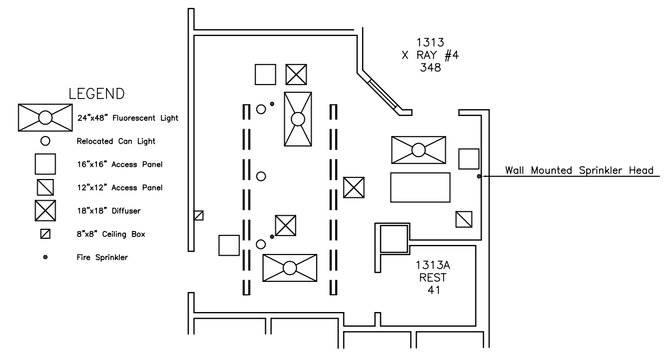

REFLECTED CEILING PLAN

Scale: 1/8" = 1'

1. Finished ceiling to be 1/4" above bottom of the Unistrut.
2. Refer to other plans for location of each item.

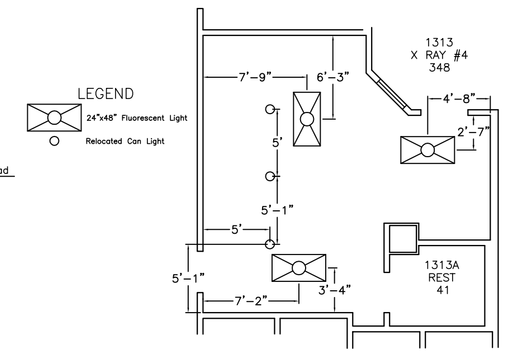

LIGHTING PLAN

Scale: 1/8" = 1'

1. Reinstall can lights as shown.
2. Reinstall fluorescent lights as shown.

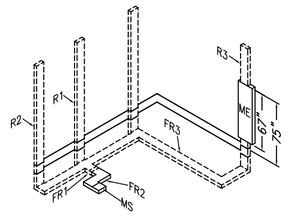

RACEWAY DIAGRAM

(Not To Scale)

1. The use of 90 degree ells is not acceptable; use 45 degree bends at all raceway corners. The use of crossover tunnels at all applicable location is required.

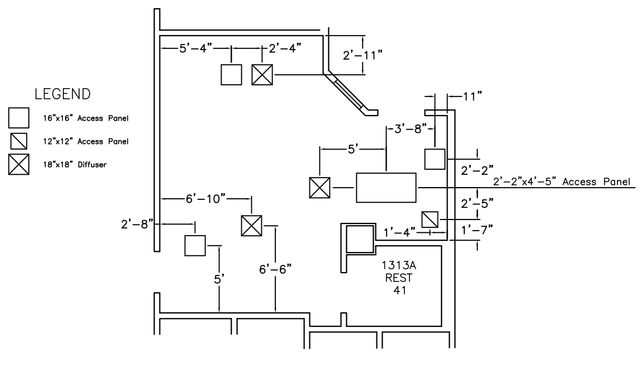

HVAC PLAN

Scale: 1/8" = 1'

1. HVAC diffuser to be installed as shown and balanced as needed.
2. Reinstall access panels as shown.

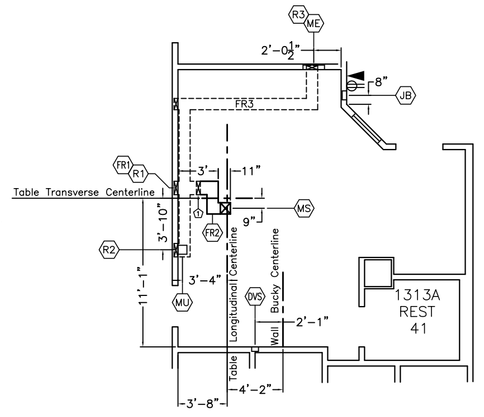

ELECTRICAL PLAN

Scale: 1/8" = 1'

1. Close riser duct to allow for new trench raceway.
2. Patch floor where close riser duct was located.

GENERAL NOTES

1. Davis/Bacon wage rates to apply.
2. Contractor to field verify all dimensions.
3. This job to be phased to accommodate daily activity.
4. Patch and repair all areas where demo occurs.
5. Any visible conditions not included on this drawing shall be included.

Conduit Required

General Notes:
1. All conduit runs must take most direct route point to point.
2. All conduit runs must have a pull string.

A Conduit supplied and installed by contractor – Philips cables installed by Philips.
B Conduit supplied and installed by contractor – Philips cables installed by contractor.
C Conduit and cables supplied and installed by contractor.
D Conduit existing – cables supplied and installed by Philips.
E Conduit existing – cables supplied by Philips and installed by contractor.
F Conduit existing – cables supplied and installed by contractor.

* Cable Type
F Fiber Optic
H High Tension Power Cables
P Power / Ground
S Signal Cables
V Video Cables

√	Conduit Run #	From	To	Conduit Quantity	Cable Type *	Minimum Conduit Size	Maximum Conduit Length	Special Requirements
C	1	Power Panel	CB	1	P	Per N.E.C.	Per N.E.C.	
B	2	CB	MC	1	P	2"	50'	
C	3	CB	ST	1	P	3/4"	50'	
C	4	MC	WL	1	P	1/2"	50'	
C	5	MC	DS	1	P	1/2"	50'	
A	6	MC	JB	1	P	1 1/2"	55'	TO CONNECT TO "FR3"
A	7	MC	JB	1	S	2"	55'	TO CONNECT TO "FR3"
A	8	MC	DV	1	P	1 1/2"	46'	TO CONNECT TO "FR3"
A	9	MC	DV	1	S	2"	46'	TO CONNECT TO "FR3"
A	10	JB	MS	1	F /S	1 1/2"	55'	VIA "FR3", "R1", "FR1", AND "FR2"
A	11	JB	DV	1	F /S	1 1/2"	98'	TO CONNECT TO "FR3"

Power Quality Requirements
Optimus 65

Power Output:	65 KW
Supply Configuration:	3 phase, 3 wire power and ground, delta or wye 400, 440, 460, or 480 VAC 50 or 60 Hz
Nominal Line Voltage:	± 2% steady-state
Line Voltage Variation:	3% maximum of nominal voltage between phases
Line Voltage Balance:	± 1% (± 0.6 Hz)
Frequency Variation:	To 110% of steady-state voltage 100 msecs. maximum duration, 6 per hour maximum
Voltage Surges:	To 90% of steady-state voltage 100 msecs. maximum duration, 6 per hour maximum
Voltage Sags:	1000 VPK above phase-neutral RMS absolute maximum. No more than 1 impulse per hour to exceed 500 VPK.
Line Impulses:	2.0 volts maximum RMS value.
Neutral-ground Voltage:	No more than 1 per hour that exceeds 25 volts and 1 Mjoule
Neutral-ground Impulses:	3.0 volts steady-state maximum. Over 3.0 volts permitted for 100 msec. maximum, 1 per hour maximum
High Frequency Noise:	0.1 Ω @ 60Hz maxium
Ground and Neutral Conductor Impedance:	

Branch Circuit and Wire Gauge Requirements
Optimus 65

Branch Power:	187 kVA minimum			
Circuit Breaker:	3 pole, 80 amperes (@ 480V)			
Maximum Instantaneous Power:	130 KVA (650 MA @ 100 KV) (Short-term) < 8 amperes (Stand-by/Long-term)			
Recommended conductor sizes for 1% impedance of branch conductors to circuit breaker (CB), based on 20°C copper conductors:				
Branch Power:	400 VAC	400 VAC	400 VAC	400 VAC
#2 AWG	64 feet	78 feet	85 feet	93 feet
#1 AWG	81 feet	98 feet	107 feet	117 feet
1/0 AWG	102 feet	124 feet	135 feet	147 feet
2/0 AWG	128 feet	156 feet	170 feet	186 feet
3/0 AWG	162 feet	197 feet	215 feet	234 feet
4/0 AWG	205 feet	240 feet	271 feet	295 feet
250 MCM	242 feet	293 feet	320 feet	349 feet
300 MCM	290 feet	352 feet	384 feet	419 feet
Instantaneous Current	188 A	171 A	163 A	156 A
Maximum Phase-Phase Impedance	0.2 Ω	0.2 Ω	0.2 Ω	0.2 Ω
Maximum Load Voltage Drop	37.5 V	34.2 V	32.6 V	31.2 V
Percent Regulation at Maximum Load	9.4%	7.1%	6.8%	6.5%
Minimum copper wire size, circuit breaker (CB) to equipment: #4, maximum 50' in length.				
CHART CB				

Electrical Legend

B Furnished by customer/contractor and installed by customer/contractor.
D Furnished by Philips and installed by contractor.
E Existing

	Item Number	Description
B	CB	480V, 3 phase 80 amp circuit breaker with shunt trip and load side pressure lugs for #2 A.W.G. extra flexible cable (T+H type 3109 "locktight" or similar). Run power from breaker to wall box "MC", leaving an 8' tail. Location per local code or owner requirements. (Not shown on plan) See chart "CB" for power quality req.
B	ST	Shunt Trip (emergency off) – Large mushroom-head button on remote control station with contacts to operate feature of "CB". Location per local code or owner requirements (mandatory for VA and D.O.D. installations). (Not shown on plan)
B	WL	Warning Light – Provide an incandescent surface or flush mounted light fixture above door to indicate when X-Ray is on. (Not shown on plan)
B	DS	Door Switch – 120V, 5A switch limited to open when door is open. Mount in upper corner on strike side of main entry door(s) (Cooper no. 1665 or equivalent), if required by local code or physicist or record. (Not shown on plan)
D	MC	19 1/4"W x 67"H x 4"D flanged-edge terminal wall box with removable screw-type cover plate, flush mounted 75" A.F.F. to top of box. Conduits to terminate on top & sides of the box as required.
B	DV	6"W x 6"L x 4"D wall box with removable screw-type cover plate, flush mounted 39" A.F.F. to bottom of box.
B	MU	8"W x 8"L x 6"D ceiling box, flush mounted with removable screw-type cover plate. To connect to "R2" as necessary.
B	MS	Grommet opening at the top of "FR2". Exact size and location to be determine by local Philips Service.
B	JB	8"W x 8"H x 4"D wall box with removable screw-type cover plate, flush mounted 22" A.F.F. to bottom of box. Location shown is recommended and may be changed – verify relocation with Philips Service. For cables to "ELW"
B	▲	RJ45 type Ethernet 10/100/1000 Mbit network connector. Access through customer's network to VPN device capable of connecting to the Philips Remote Service Network (RSN) Datacenter is needed. Locate within 10' of network card. Network Fiber optic and Ethernet cabling, connectors, wall boxes, patch panels, etc, are responsibility of the purchaser. Philips assumes no responsibility for procurement, installation, or maintenance of the components.
B		120V, 20A dedicated duplex outlet. Coordinate exact location with local Philips Service. (For optional M-Shield, if ordered.)
E	FR1	Existing 10"W x 4"D floor trench raceway, flush mounted with removable 1/4" thick steel cover plate.
B	FR2	10"W x 4"D floor trench raceway, flush mounted with removable 1/4" thick steel cover plate.
E	FR3	Existing 10"W x 4"D floor trench raceway, mounted below finished floor with removable 1/4" think steel cover plate. Exact location to be verified with Philips Service.
E	R1	Existing 10"W x 3 1/2"D flush mounted riser duct with removable screw-type cover plate from "FR1" to above finished ceiling.
E	R2	Existing 10"W x 4"D flush mounted riser duct with removable screw-type cover plate from "FR3" to above finished ceiling.
E	R3	Existing 10"W x 4"D flush mounted riser duct with removable screw-type cover plate from "FR3" to above finished ceiling. To connect to "MC" as necessary.

Revisions	Date

Drawing Title: Construction Plans	Project Title: Renovate Radiation Room #4		Date: 2/13/2012
			Project No. 504-12-005
Approved: Division Chief	Building Number: 28	Checked: DWR	Drawn: DWR/AJW
Approved: Service Director	Location: AMARILLO, TEXAS		DRAWING NO. 1 Dwg. 1 Of 1

Veterans Affairs

VA FORM 08-6231, FEB. 1983

☆U.S. GOVERNMENT PRINTING OFFICE: 1983-400-285