Installation Data Sheet

Series: 1:1 Belt Drive AS.3 SFC
Document No.: TI-DATA-2014-SFC 18S 22S
Version: 1.4
Revision Date: 09/11/15

Model	SFC 18S						SFC 22S					
Rated Pressure [psig]	**110**	**125**	**145**	**160**	**190**	**217**	**110**	**125**	**145**	**160**	**190**	**217**
I. COOLING DATA												
Cooling System Available [Std., Opt.]	A/C						A/C					
Standard Ambient Temp. Range [°F]	40 - 115						40 - 115					
VENTILATION OF COMPRESSOR ROOM												
Air Inlet Opening [sq. ft.] (A/C) **Z**	6.5						7.5					
Solution A (forced ventilation with exhaust fan) as shown in service manual												
Cooling Fan Capacity [CFM] (A/C)	2,354						2,943					
Solution B (exhaust air used for space heating) as shown in service manual												
Internal Cooling Fan Capacity [CFM] (A/C)	1,940						2,530					
Max. Additional Pressure Drop for Ducts [inch Water Column], (A/C)	1/4						1/6					
Exhaust Air Opening Reference Dimensions (L x W) [in] *See drawing for actual dimensions. The actual individual duct dimension will vary for every installation based on actual length, number and type of bends, accessories etc.*	25 1/2 x 20						25 1/2 x 20					

Model shown for reference only
Actual Duct size may vary with installation

A **Exhaust Fan**

B **Exhaust Air Duct**

Z **Inlet Air Opening**

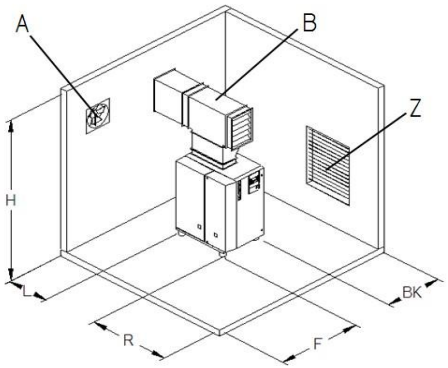

Recommended machine placement and dimensions		inches
L	**Left side clearance =**	**8**
R	**Right side clearance =**	**40**
F	**Front clearance =**	**40**
BK	**Back clearance =**	**40**
H	**Height clearance =**	**140**

AIR COOLED DATA						
Internal Cooling Fan Capacity [CFM]	1,940			2,530		
Approach Temp. [°F] *Reference conditions: 14.5 psia, 30% relative humidity and 68°F inlet air temperature.*	12.6	10.8	9	14.4	12.6	10.8
Typical Heat Rejected [BTU / HR]	78,200			93,600		
Fan Motor [HP], oilcooler/aircooler	0.74			0.74		

Copyright 2015, Kaeser Compressors, Inc.

Confidential
Specifications are subject to change without notice.

Installation Data Sheet

Series: 1:1 Belt Drive AS.3 SFC
Document No.: TI-DATA-2014-SFC 18S 22S
Version: 1.4
Revision Date: 09/11/15

Model		SFC 18S						SFC 22S					
Rated Pressure [psig]		**110**	**125**	**145**	**160**	**190**	**217**	**110**	**125**	**145**	**160**	**190**	**217**
II. ELECTRICAL DATA	*Electrical data may vary in accordance with motor manufacturer's specifications. Motors are EISA compliant.*												
Drive Motor													
Motor HP		25						30					
NEMA Nominal Efficiency %		91.7%						91.7%					
Service Factor		1.24						1.22					
Enclosure Type		TEFC/IP 55						TEFC/IP 55					
Insulation Class		F						F					
Standard Voltage		460V/3ph/60Hz						460V/3ph/60Hz					
Full Load Amps [FLA] @ 460V/3ph/60 Hz/YD		29.5						33.5					
FAN MOTOR (A/C)													
Enclosure Type		TEFC/IP 55						TEFC/IP 55					
Insulation Class		F						F					
Fan Motor [HP], oilcooler | aircooler		0.74						0.74					
Nominal Efficiency %, oilcooler | aircooler		76.5%						76.5%					
Full Load Amps [FLA] @ 460V/3ph/60 Hz/YD, oilcooler		1.62						1.62					
TOTAL PACKAGE DATA (A/C)													
Do NOT operate package on any unsymmetrical power supply. Also do NOT operate package on power supplies like, for example, a three-phase (open) delta or three-phase start with non-grounded neutral. The machine requires a symmetrical three-phase power supply transformer with a WYE configuration output as shown on the right. In a symmetrical three-phase supply the phase angles and voltages are all the same. Other power supplies are not suitable.		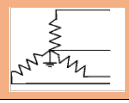 **three-phase star (wye); 4-wire; grounded neutral**						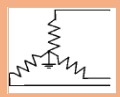 **three-phase star (wye); 3-wire; grounded neutral**					
Continuous Duty (Hours per day)		24						24					
Control Cabinet Class [NEMA]		12						12					
Short Circuit Current Rating (SCCR) [kA] @ 460V/3ph/60 Hz/YD		50						50					
Package Full Load Amps @ 460V/3ph/60 Hz/YD (A/C)		45						45					
Recommended Disconnect Fuse Size [Amps] @ 460V/3ph/60Hz/YD (A/C)	Dual-element time-delay fuse; based on 2011 NEC 240.6, 430.52, and Tables 430.52, 430.148,and 430.150.4.	70						70					
Recommended Disconnect Wire Size [AWG/kcmil] @ 460V/3ph/60Hz/YD (A/C)	Based on 2011 NEC 110.14(C), 220.3, 310.15, Table 310.16, 430.6, 430.22, 430.24 and Tables 430.148 and 430.150. Use multi-strand copper core wire. Size calculated based on 40°C ambient temperature, with 60°C insulation rated wire if package FLA x 1.25 is less than 100A or 75°C temperature rated wire for 100A and larger.	3 AWG per phase and ground						3 AWG per phase and ground					
INSTALLATION and MAINTENANCE DATA													
A/C with Super Soundproofing [dB(A)]	*SOUND PRESSURE LEVEL [Measured in dB(A) according to ISO 2151 using ISO 9614-2]*	70						72					
A/C Air Discharge [inches NPT]		1 1/4						1 1/4					
Power Input Conduit Opening(s) [inches]		2 1/4						2 1/4					
Condensate Drain Connection [NPT]		N/A						N/A					
Width [inches]		31 1/2						31 1/2					
Depth [inches]		43 1/2						43 1/2					
Height [inches]		60 1/4						60 1/4					
Floor Space [sq. ft.]		9.6						9.6					
Weight (A/C)[lb]	*Weight may vary based on airend selected.*	1,169						1,213					
Estimated Shipping Weight [lb]		CF						CF					
COMPRESSOR FLUID DATA													
Fluid Capacity (A/C) [gal]		2.9						2.9					
Flow Rate [gal/min]		9						9					
Standard Fluid Type		Sigma M-460						Sigma M-460					
MAINTENANCE PARTS													
Air Inlet Filter		6.4163.0											
Filter Mat (optional)		5.6143.0											
Filter Mat for Control Cabinet		6.3572.0											
Fluid Filter		6.3463.0											
Fluid Separator Kit		6.3789.0											
Maintenance Kit for Optional 5-year warranty		ANAKASK3SFC											
Maintenance Kit for Optional 5-year warranty, with food-grade lubricant		ANAKASK3SFCS											

Copyright 2015, Kaeser Compressors, Inc.