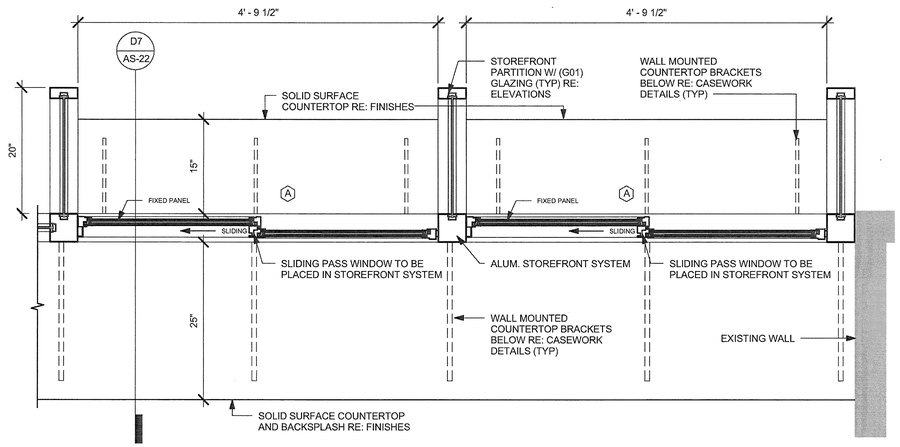

C11 ENLARGED PLAN DTL. AT ENTRY
1" = 1'-0"

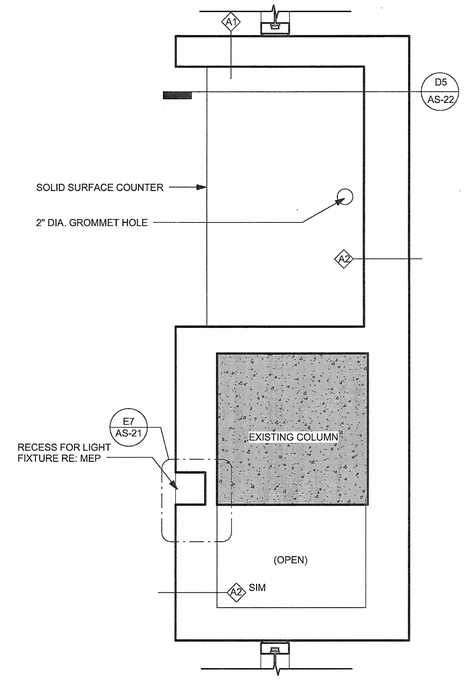

C7 ENLARGED PLAN AT CONF. 120 - 1
1" = 1'-0"

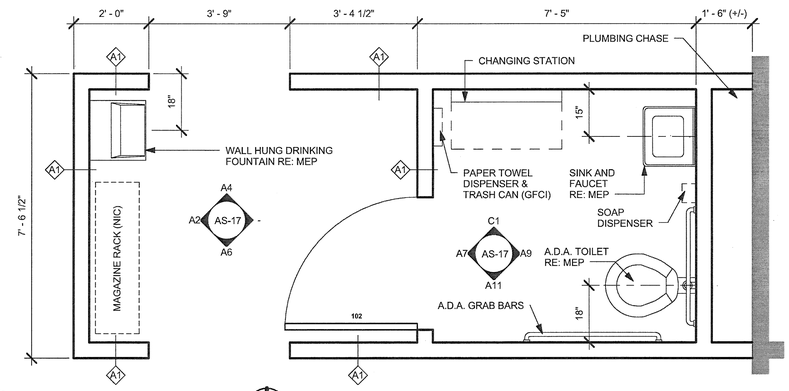

C4 ENLARGED PLAN RESTROOM 102
1/2" = 1'-0"

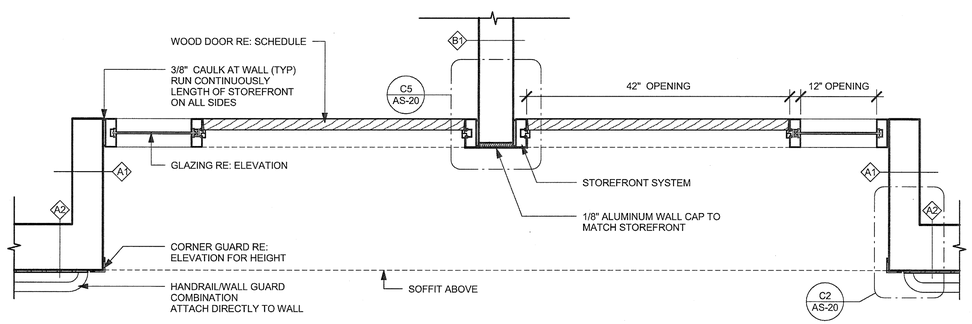

A10 ENLARGED PLAN DOOR AT OFFICE (TYP)
1" = 1'-0"

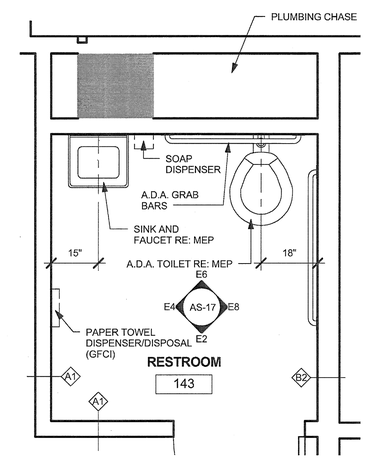

A5 ENLARGED PLAN R/R 143
1/2" = 1'-0"

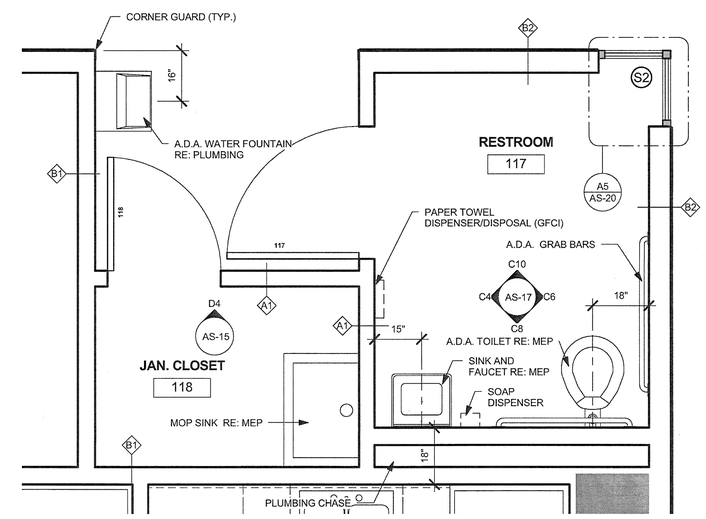

A4 ENLARGED PLAN R/R 117 & 121
1/2" = 1'-0"

Revision	Date

CONSULTANTS:

Smith Seckman Reid, Inc.
11460 Tomahawk Creek Pkwy Suite 320
Leawood, Kansas 66211
p. (913) 319-3562
f. (913) 319-3579
www.ssr-inc.com

CMG Fire Protection Engineering
10727 West 128th Street
Overland Park, KS 66213
p. (913) 239-8900
f. (913) 239-8901
www.cmgfire.com

Seal
STATE OF MISSISSIPPI
JAMES CHRISTOPHER TOMPKINS
NUMBER
4-6-09
REGISTERED ARCHITECT

ARCHITECT:
TOMPKINS ARCHITECTS
507 Walnut Street, Suite 200, Kansas City, MO 64106
p. 816 472 5656 f. 816 472 5657 www.tom-arch.com

COPYRIGHT 2011 BY TOMPKINS ARCHITECTS, INC. ALL RIGHTS RESERVED. NO PART OF THESE DOCUMENTS MAY BE REPRODUCED, STORED IN A RETRIEVAL SYSTEM, OR TRANSMITTED IN ANY FORM OR BY ANY MEANS, ELECTRONIC, MECHANICAL, PHOTOCOPYING, RECORDING, OR OTHERWISE, WITHOUT THE PRIOR WRITTEN PERMISSION OF TOMPKINS ARCHITECTS INC.

Drawing Title
ENLARGED PLANS

Approved:

Project Title
RENOVATE 3K FOR MENTAL HEALTH O/P CLINICS

Location
G.V. (SONNY) MONTGOMERY VA MEDICAL CENTER

Date 03/09/12
100% SUBMISSION

Project Number 586-09-114
Building Number 3K
Drawing Number AS-18

G.V. (SONNY) MONTGOMERY VA MEDICAL CENTER
1500 E WOODROW WILSON
JACKSON, MS
39216

Department of Veterans Affairs