SECTION DETAIL NOTES:

1. ALL LIGHTING FIXTURES ARE TO BE BRACED ABOVE CEILING AS REQUIRED. RE: REFLECTED CEILING PLAN FOR LIGHT LOCATIONS.
2. ALL SOFFIT SIZES ARE TO BE VERIFIED WITH THE REFLECTED CEILING PLANS AND SECTIONS FOR HEIGHTS AND WIDTHS

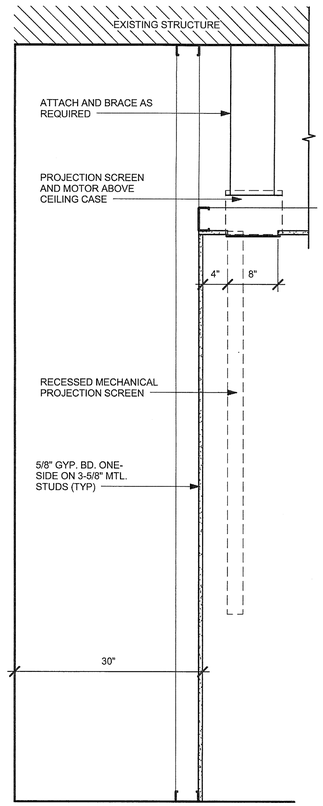

C11 SEC. DTL. AT CONF 120 - 1
1" = 1'-0"

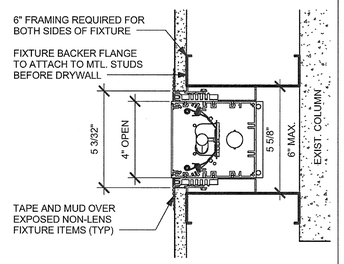

E7 CONF. FIXTURE - WALL DETAIL
3" = 1'-0"

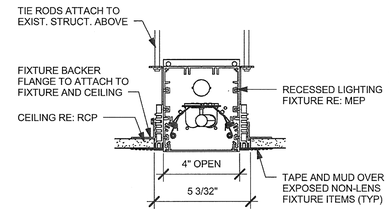

E6 CONF. FIXTURE - CEILING DETAIL
3" = 1'-0"

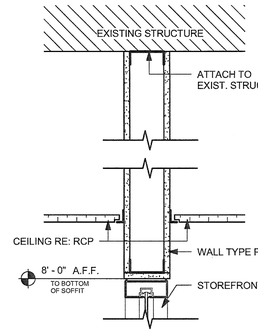

E4 SEC. DTL. AT CEILING - 4
1 1/2" = 1'-0"

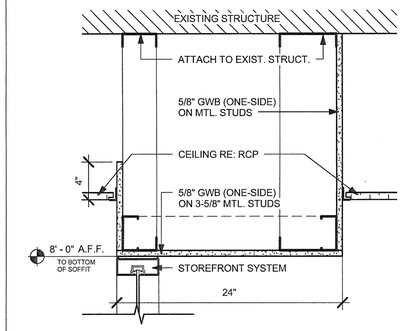

E2 SEC. DTL. AT SOFFIT - 4
1 1/2" = 1'-0"

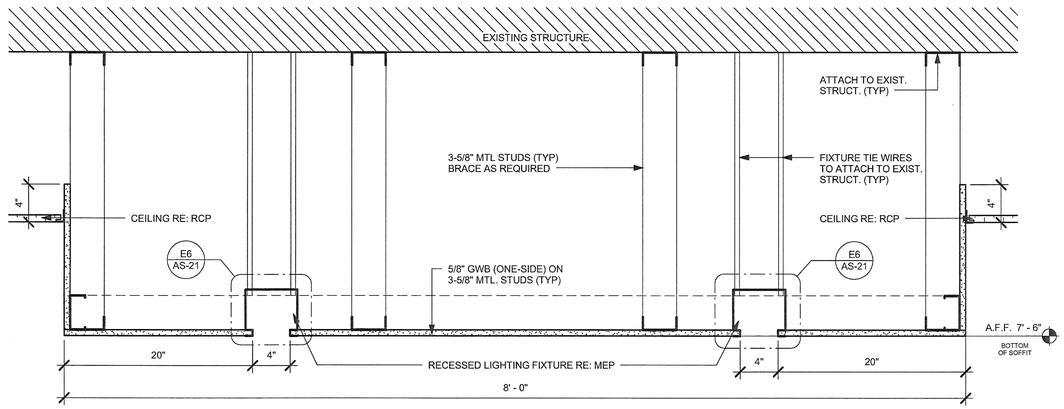

C9 SEC. DTL. AT CEILING - 3
1 1/2" = 1'-0"

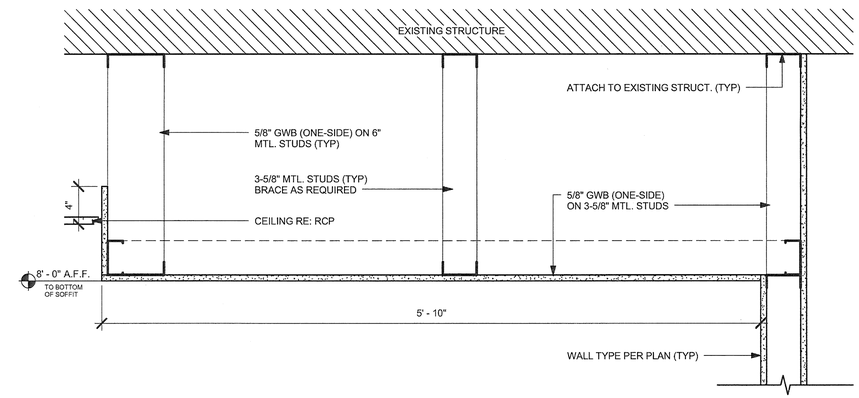

C4 SEC. DTL. AT CEILING - 2
1 1/2" = 1'-0"

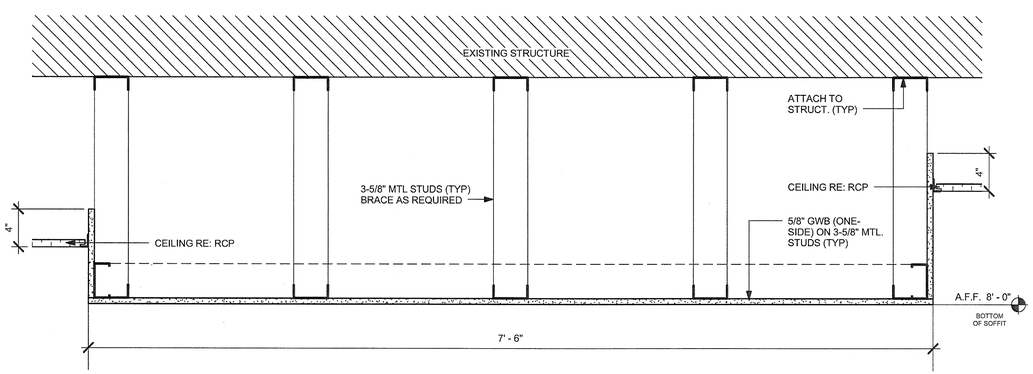

A11 SEC. DTL. AT CEILING - 1
1 1/2" = 1'-0"

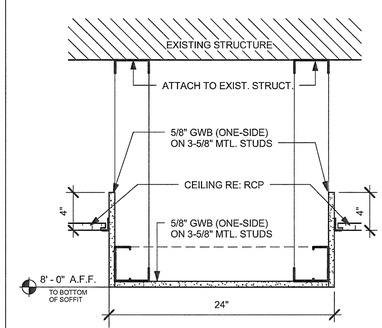

A6 SEC. DTL. AT SOFFIT - 3
1 1/2" = 1'-0"

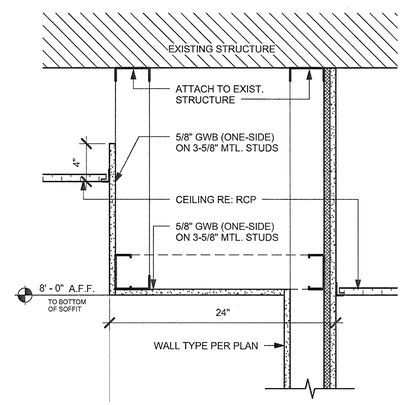

A4 SEC. DTL. AT SOFFIT - 2
1 1/2" = 1'-0"

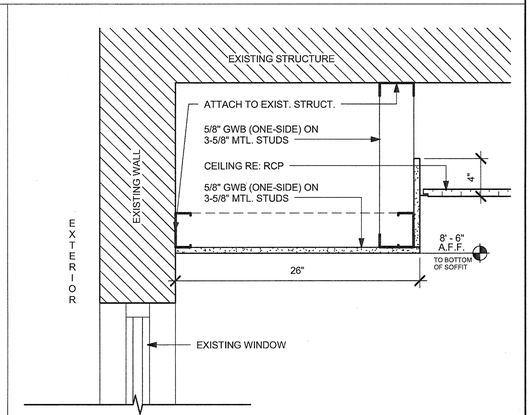

A3 SEC. DTL. AT SOFFIT - 1
1 1/2" = 1'-0"

Revision	Date

CONSULTANTS:

Smith Seckman Reid, Inc.
11460 Tomahawk Creek Pkwy Suite 320
Leawood, Kansas 66211
p. (913) 319-3562
f. (913) 319-3579
www.ssr-inc.com

CMG Fire Protection Engineering
10727 West 128th Street
Overland Park, KS 66213
p. (913) 239-8900
f. (913) 239-8901
www.cmgfire.com

Seal

STATE OF MISSOURI
JAMES EDWARD TOMPKINS
NUMBER A-5499
REGISTERED ARCHITECT

ARCHITECT:

TOMPKINS ARCHITECTS
507 Walnut Street, Suite 200, Kansas City, MO 64106
p. 816 472 5656 f. 816 472 5657 www.tom-arch.com

COPYRIGHT 2011 BY TOMPKINS ARCHITECTS, INC. ALL RIGHTS RESERVED. NO PART OF THESE DOCUMENTS MAY BE REPRODUCED, STORED IN A RETRIEVAL SYSTEM, OR TRANSMITTED IN ANY FORM OR BY ANY MEANS, ELECTRONIC, MECHANICAL, PHOTOCOPYING, RECORDING, OR OTHERWISE, WITHOUT THE PRIOR WRITTEN PERMISSION OF TOMPKINS ARCHITECTS INC.

Drawing Title: DETAILS

Approved:

Project Title: RENOVATE 3K FOR MENTAL HEALTH O/P CLINICS

Location: G.V. (SONNY) MONTGOMERY VA MEDICAL CENTER

Date: 03/09/12

100% SUBMISSION

Project Number: 586-09-114

Building Number: 3K

Drawing Number: AS-21

G.V. (SONNY) MONTGOMERY VA MEDICAL CENTER
1500 E WOODROW WILSON
JACKSON, MS
39216

Department of Veterans Affairs