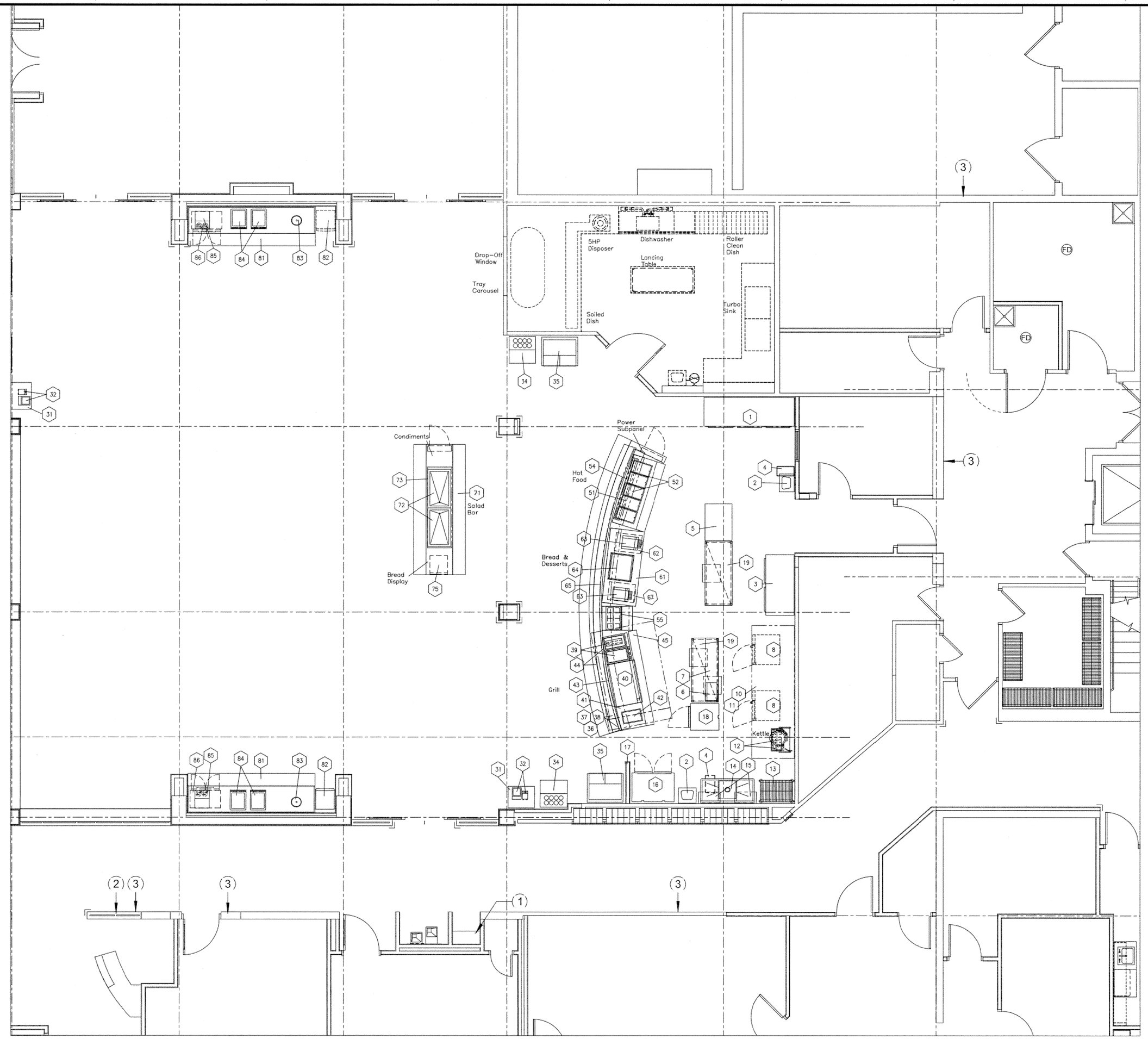

1 EQUIPMENT PLAN
1/4" = 1'-0"

EQUIPMENT SCHEDULE

ITEM	DESCRIPTION	COMMENTS	QTY
01	Three-Door Roll-In Refrigerator	By Government	1
02	Hand Sinks	By G.C.; NIKEC	2
03	Two-Door Roll-In Refrigerator	By Government	1
04	Waste Receptacles	By Owner; NIC	Lot
05	Mobile Hot Cabinet	Existing; relocate	1
06	Microwave Oven	By Government	1
07	Table Mounted Overshelf	By Government	1
08	Combi Steamers	Existing in Place	2
09	Spare Number		
10	Vapor Hood	By Government	1
11	Duct, Fan, Controls	By G.C.; NIKEC	Lot
12	20 Qt. Kettle on Stand	By Government	1
13	Pan and Tool Shelf	By Government	1
14	Vegetable Prep Sink	By G.C.	1
15	Wall Shelves	By Government	2
16	Two-Door Reach-In Refrigerator/Freezer	By Government	1
17	Corner Guards and Flash Trim	By Government	Lot
18	Reach-In Refrigerator/Freezer	By Government	1
19	Landing Table	By Government	2
20-30	Spare Numbers	By Government	
31	Check-In Desk	By Government	2
32	Check-In System	By Owner; NIC	Lot
33	Spare Number		
34	Tray/Utensil Carts	By Government	2
35	Milk Dispenser	By Government	2
36	Exhaust Hood	By G.C.	1
37	Duct, Fan, Controls	By G.C.; NIKEC	Lot
38	Fire Suppression System	By G.C.	1
39	Fryer Battery	By Government	1
40	Griddle on Stand	Existing; Relocate BY G.C.	1
41	Spreader Cabinet	By Government	1
42	Hot Food Well	By Government	1
43	Vertical Shield	By Government	1
44	Tray Slide and Overshelf	By Government	1
45	Service Bar	By Government	1
46-50	Spare Numbers	By Government	
51	Hot Food Counter	By Government	1
52	Hot Food Wells	By Government	5
53	Spare Number		
54	Full-Service Sneeze Guard w/Heat Lamp	By Government	1
55	Sandwich Refrigerator	By Government	1
56-60	Spare Numbers		
61	Utility Table	By Government	1
62	Warming Drawer	By Government	1
63	Conveyor Toaster	By Government	1
64	Frost Top Unit	By Government	1
65	Self-Service Sneeze Guard	By Government	1
66-70	Spare Numbers		
71	Salad Bar with Tray Slides	By Government	1
72	Drop-In Cold Pans	By Government	2
73	Self-Service Sneeze Guard	By Government	1
74	Spare Number		
75	Undercounter Refrigerator	By Government	1
76-80	Spare Numbers		
81	Beverage Counters with Tray Slides	By Government	2
82	Ice Maker/Dispenser	(1) Existing; Relocate	2
83	Tea Dispensers	By Vendor; NIC	2
84	Juice Machines	By Vendor; NIC	4
85	Coffee Units	By Vendor; NIC	2
86	Undercounter Refrigerators	By Government	2
87+	Spare Numbers		

NIC – NOT IN CONTRACT
NIKEC – NOT IN KITCHEN EQUIPMENT CONTRACT

TRICON FOODSERVICE CONSULTANTS, INC.
344 MAPLE AVENUE WEST, #325
VIENNA, VA 22180 USA
703 242-7020
tricon.tricon1@verizon.net

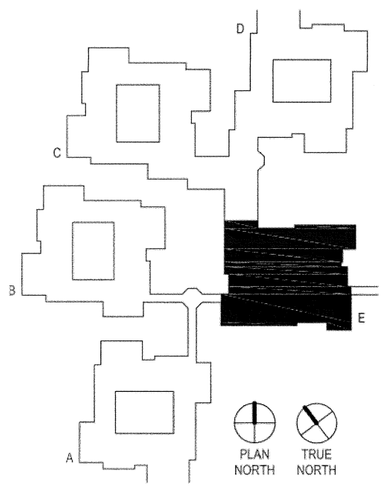

KEY PLAN
1" = 100'-0"

100% Construction Documents Submission	02/24/12
95% Construction Documents	02/10/12
60% Design Development	01/20/12
Schematic Design	11/30/11
Issuances:	Date

ARCHITECT / ENGINEERS:

Oudens Knoop Knoop + Sachs Architects
2 Wisconsin Circle / Suite 820
Chevy Chase, MD 20815-7003
Tel: (301) 718-0080
Fax: (301) 718-9520

HENRY ADAMS
Consulting Engineers
Mechanical Electrical & Plumbing Engineers

Henry Adams, LLC
Consulting Engineers
600 Baltimore Avenue
Baltimore, MD 21204
Tel: (410)296-6500
Fax: (410)296-3156

Woods Peacock Engineering Consultants
Halifax Office Park
5250 Cherokee Avenue, Suite 420
Alexandria, VA 22312-2052
Tel: (703) 658-4400
Fax: (703) 658-4404

Patton Harris Rust & Associates
A Pennoni Company
117 East Piccadilly Street, Suite 308
Winchester, VA 22601-5002
Tel: (540) 667-2139
Fax: (540) 665-0493

Stamp/Seal

Approved: Project Director

Drawing Title: FOODSERVICE EQUIPMENT PLAN

Project Title: BUILDING 502 E WING RENOVATION

VA Project Number: 613-12-101

Building Number: 502

Location: MARTINSBURG, WV

Date: 01/20/12 | Checked: PEM | Drawn: SHL

Drawing Number: K100

Office of Construction and Facilities Management

Department of Veterans Affairs

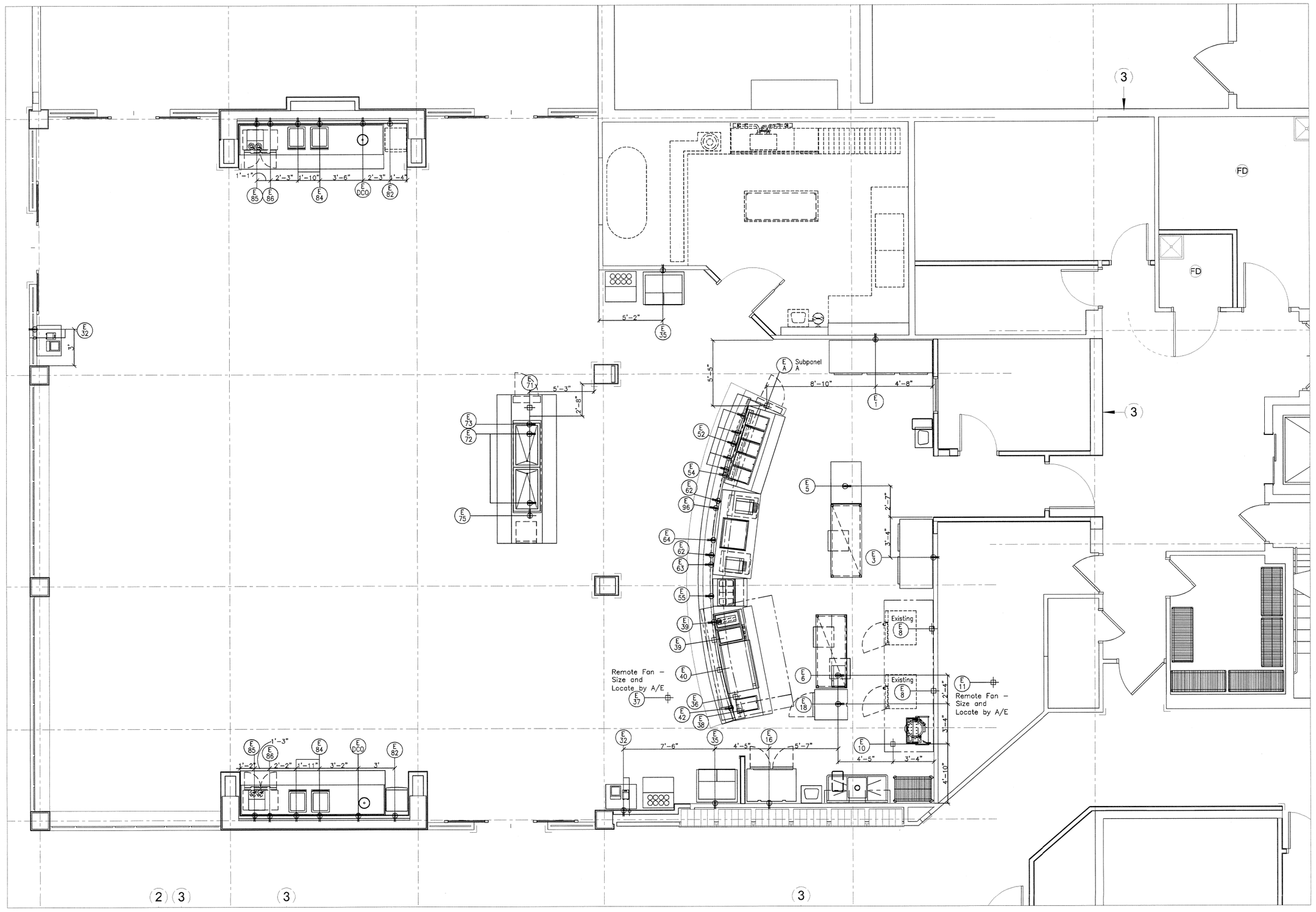

ELECTRICAL CONNECTION SCHEDULE

CONN.	ITEM	DESCRIPTION	TYPE	VOLTS	PH	AMPS	KW	HP	COMMENTS	AFF
EDCO		Convenience Outlet	DR	120	1	15.0				+48"
EMO		Maintenance Outlet	DR	120	1	15.0				+18"
E-A		Subpanel A	JB	120/208	3	Vfy.			Sized by A/E; provided by G.C.	+6" floor stub
E01	01	Three-Door Roll-in Refrigerator	SR	208/120	1	12.8				+86"
E03	03	Two-Door Roll-in Refrigerator	SR	208/120	1	11.4				+86"
E05	05	Mobile Hot Cabinet	SR	120	1	13.7				DFA +72"
E06	06	Microwave Oven	DR	120	1	13.4				DFA +60"
E08	08	Combi Steamers	JB	480	3		37.0		Existing, reconnect; vfy. requirements	
E10	10	Vapor Hood	JB	120	1		700W		Lights	DFA +108"
E11	11	Duct, Fan, Controls	JB	Vfy.		Vfy.			Size and locate by A/E	Remote; To existing shaft
E12	12	20 Qt. Kettle on Stand	JB	208	1		6.0			+12"
E16	16	Two-Door Reach-in Refrigerator/freezer	DR	120	1	12.6				+86"
E18	18	Reach-in Refrigerator/Freezer	DR	120	1	10.3				DFA +86"
E32	32	Check-in System	DR	120	1		800W		+1/2" EMT to remote CPU	+12"
E35	35	Milk Dispenser	DR	120	1	7.0				+12"
E36	36	Exhaust Hood	JB	120	1		500W		Lights	DFA +108"
E37	37	Duct, Fan, Controls	JB	Vfy.		Vfy.			Size and locate by A/E	Remote; To existing shaft
E38	38	Fire Suppression System	JB	120	1	20.0 cct.				DFA +108"
E39	39	Fryer Battery	JB	208	3		17.0		To electrical subpanel A by G.C.	
E39	39	Dump Station	SR	120	1	10.0			Heat lamp. To electrical subpanel A by G.C.	
E39	39	Filter	DR	208	1	3.6			Filter; To electrical subpanel A by G.C.	
E40	40	Griddle on Stand	JB	208	3		21.0		To electrical subpanel A by G.C. by G.C.	
E42	42	Hot Food Well	DR	120	1	10.0			To electrical subpanel A by G.C.	
E52	52	Hot Food Wells	DR	120	1	10.0 ea.			To electrical subpanel A by G.C.	
E54	54	Full-Service Sneeze Guard w/Heat Lamp	DR	120	1		2.0		To electrical subpanel A by G.C.	
E55	55	Sandwich Refrigerator	DR	120	1	5.5			To electrical subpanel A by G.C.	
E62	62	Warming Drawer	DR	120	1	7.5			To electrical subpanel A by G.C.	
E63	63	Conveyor Toaster	DR	208	1	13.6			To electrical subpanel A by G.C.	
E64	64	Frozt Tap Unit	DR	120	1	5.0			To electrical subpanel A by G.C.	
E65	65	Self-Service Sneeze Guard	DR	120	1	5.0			Lights; To electrical subpanel A	
E71	71	Salad Bar	JB	120	1	30.0 cct.			Subpanel B	Floor stub
E72	72	Drop-in Cold Plate	POC	120	1	5.0			To Subpanel B	
E73	73	Self-Service Sneeze Guard	POC	120	1		2.0		Lights; to Subpanel B	
E75	75	Undercounter Refrigerator	POC	120	1	3.0			To Subpanel B	
E82	82	Ice Maker/Dispenser	DR	120	1	20.0 cct.				+48"
E84	84	Juice Machines	DR	120	1	15.0				+48"
E85	85	Coffee Units	SR	120	1	14.2			Item by vendor; vfy. utility requirements	+48"
E86	86	Undercounter Refrigerators	DR	120	1	4.0				+12"

ELECTRICAL ROUGH-IN NOTES

1. THIS IS A ROUGH-IN DRAWING. THESE DIMENSIONED ROUGH-IN AND SLEEVE DRAWINGS MUST BE APPROVED BY THE KEC, OR PROVIDED BY THE KEC.

2. DIMENSIONS ARE GIVEN FROM FINISHED FACE OF WALL, FLOORS, OR COLUMN CENTER LINES.

3. SERVICES SHOWN RELATE TO FOOD SERVICE EQUIPMENT REQUIREMENTS ONLY AND SHOW WHERE UTILITIES ARE TO BE STUBBED-IN. CONVENIENCE RECEPTACLES, SWITCHES, CLOCK OUTLETS, TELEPHONE AND COMPUTER CONDUITS, HVAC, LIGHTING AND OTHER POWER REQUIREMENTS ARE SHOWN ON ARCHITECTURAL/ELECTRICAL DRAWINGS. DIMENSIONS FOR E/DCO'S ARE NOT SHOWN.

4. GENERAL CONTRACTOR IS RESPONSIBLE FOR:
   - ALL MATERIALS AND LABOR UP TO AND INCLUDING FINAL CONNECTIONS TO EQUIPMENT.
   - ALARM/WARNING DEVICES FOR FIRE PROTECTION, WASTE DISPOSAL, AND DETERGENT PUMPING SYSTEMS.
   - PROVISION OF AREA SUB-PANELS OR PLUG-IN POWER SUPPLY IN LIEU OF DISCONNECT SWITCHES WHEREVER POSSIBLE.
   - COORDINATION OF PANELBOARDS WITH EQUIPMENT LOCATIONS AND REQUIREMENTS.
   - SIZING OF ALL PANELBOARDS WITH SPARE CAPACITY.
   - PROVISION OF SHUNT-TRIP BREAKERS FOR COOKING EQUIPMENT AS REQUIRED FOR FIRE SUPPRESSION SYSTEMS.
   - EMPTY CONDUITS FOR CONTROL/COMPUTER WIRING AS REQUIRED BY OWNER.
   - ROUGH-IN OF ALL CONVENIENCE OUTLETS.

5. ALL ELECTRICAL WORK WITHIN FABRICATED EQUIPMENT WILL BE BY THE KEC, READY FOR FINAL CONNECTION TO ROUGH-IN STUB BY GENERAL CONTRACTOR.

6. FUTURE EQUIPMENT CONNECTIONS ARE TO BE COMPLETELY ROUGHED-IN AND WIRED, WITH COVER PLATES ON ROUGH-IN POINTS.

7. KEC IS RESPONSIBLE FOR COORDINATION/REVISION OF CONNECTIONS WITH PROJECT ENGINEERS AND CONTRACTORS FOR ANY FOOD SERVICE EQUIPMENT SUBSTITUTED FOR THE MANUFACTURER AND MODEL NUMBER SPECIFIED.

8. POS INPUT SCREEN, CLEARING UNITS, PRINTERS, AND CPU INTERFACE WIRING IS SCHEMATIC. OWNER'S CONTRACTED PROVIDER/INSTALLER/SYSTEM SERVICE COMPANY SHALL ADVISE/PROVIDE WIRING DIAGRAM SPECIFIC TO SYSTEM SELECTED. EQUIPMENT AND SOFTWARE IS BY OWNER; NIKEC.

9. ALL FLOOR STUBS INCLUDING ANY JUNCTION BOXES, DUPLEX RECEPTACLES, OR ANY PARTS THEREOF, SHALL BE ROUGHED-IN NOT TO EXCEED +5-3/4" AFF UNDER ANY EQUIPMENT; SEE DETAIL.

10. CEILING OUTLETS SHALL BE G.C.-MOUNTED, TWIST-LOK RECEPTACLES IN 2'x2' OR 2'x4' WHITE MELAMINE CEILING PANELS. G.C. PROVIDE ELECTRICAL PIGTAILS WITH TWIST-LOK PLUGS AND FLEXIBLE CORDS DOWN TO +78" AFF WITH TWIST-LOK RECEPTACLES. KEC SHALL PROVIDE TWIST-LOK PLUGS WITH EQUIPMENT; COORDINATE NEMA CONFIGURATION.

ELECTRICAL SYMBOLS

E	ELECTRICAL REFERENCE SYMBOL
JB	JUNCTION BOX
DISC	DISCONNECT
SR	SINGLE RECEPTACLE
DR	DUPLEX RECEPTACLE
RFO	RECESSED FLOOR OUTLET
V	VOLTS
Ø	PHASE
A	AMPS
KW	KILOWATTS
IC	EQUIPMENT UTILITY INTERCONNECTOR
FS	FLOOR STUB (RAISE TO +6")
HP	HORSEPOWER
	INCANDESCENT LIGHT (BY KEC)
	FLUORESCENT LIGHT (BY KEC)
SW	SWITCH (BY G.C.)
EP	ELECTRICAL SUBPANEL (BY KEC) (BUILT-IN ONLY)
POC	POINT OF CONNECTION, BRANCH FROM ADJACENT STUB
DCO	CONVENIENCE OUTLET, DUPLEX RECEPTACLE, 120V, +48"
CO	CONVENIENCE OUTLET, DUPLEX RECEPTACLE, 120V, +18"
MO	MAINTENANCE OUTLET, DUPLEX RECEPTACLE, 120V, +24"
SO	SPECIAL OUTLET
TEL	TELEPHONE CONNECTION
GFI	GROUND FAULT INTERRUPTER
IGR	ISOLATED GROUND RECEPTACLE
SFM	ROUGH-IN WIRE DOWN TO DISTANCE A/F.C. FROM WALL

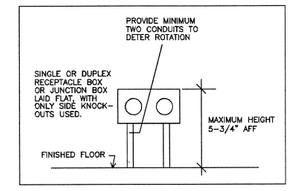

Outlet Box Stub-Up Detail
Scale : None

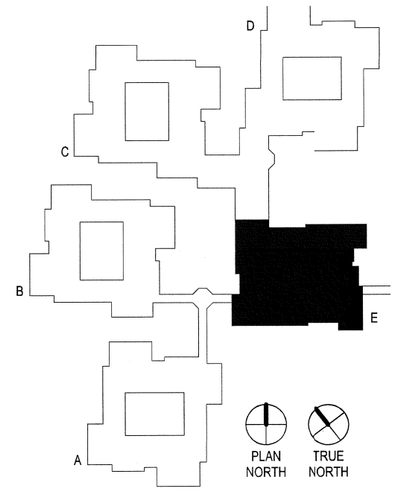

KEY PLAN
1" = 100'-0"

TRICON FOODSERVICE CONSULTANTS, INC.
344 MAPLE AVENUE WEST, #325
VIENNA, VA 22180 USA
703 242-7020
tricon.tricon1@verizon.net

100% Construction Documents Submission	02/24/12
95% Construction Documents	02/10/12
60% Design Development	01/20/12
Schematic Design	11/30/11
Issuances:	Date

ARCHITECT / ENGINEERS:

Oudens Knoop Knoop + Sachs Architects
2 Wisconsin Circle / Suite 820
Chevy Chase, MD 20815-7003
Tel: (301) 718-0080
Fax: (301) 718-9520

HENRY ADAMS
Consulting Engineers
Mechanical Electrical & Plumbing Engineers

Henry Adams, LLC Consulting Engineers
600 Baltimore Avenue
Baltimore, MD 21204
Tel: (410)296-6500
Fax: (410)296-3156

Woods Peacock Engineering Consultants
Halifax Office Park
5250 Cherokee Avenue, Suite 420
Alexandria, VA 22312-2052
Tel: (703) 658-4400
Fax: (703) 658-4404

Patton Harris Rust & Associates A Pennoni Company
117 East Piccadilly Street, Suite 308
Winchester, VA 22601-5002
Tel: (540) 667-2139
Fax: (540) 665-0493

Stamp/Seal

Approved: Project Director

Drawing Title: KITCHEN ELECTRICAL ROUGH-IN PLAN

Project Title

Location: MARTINSBURG, WV

Date: 01/20/12 | Checked: PEM | Drawn: SHL

VA Project Number: 613-12-101

Building Number: 502

Drawing Number: K200

Office of Construction and Facilities Management

Department of Veterans Affairs

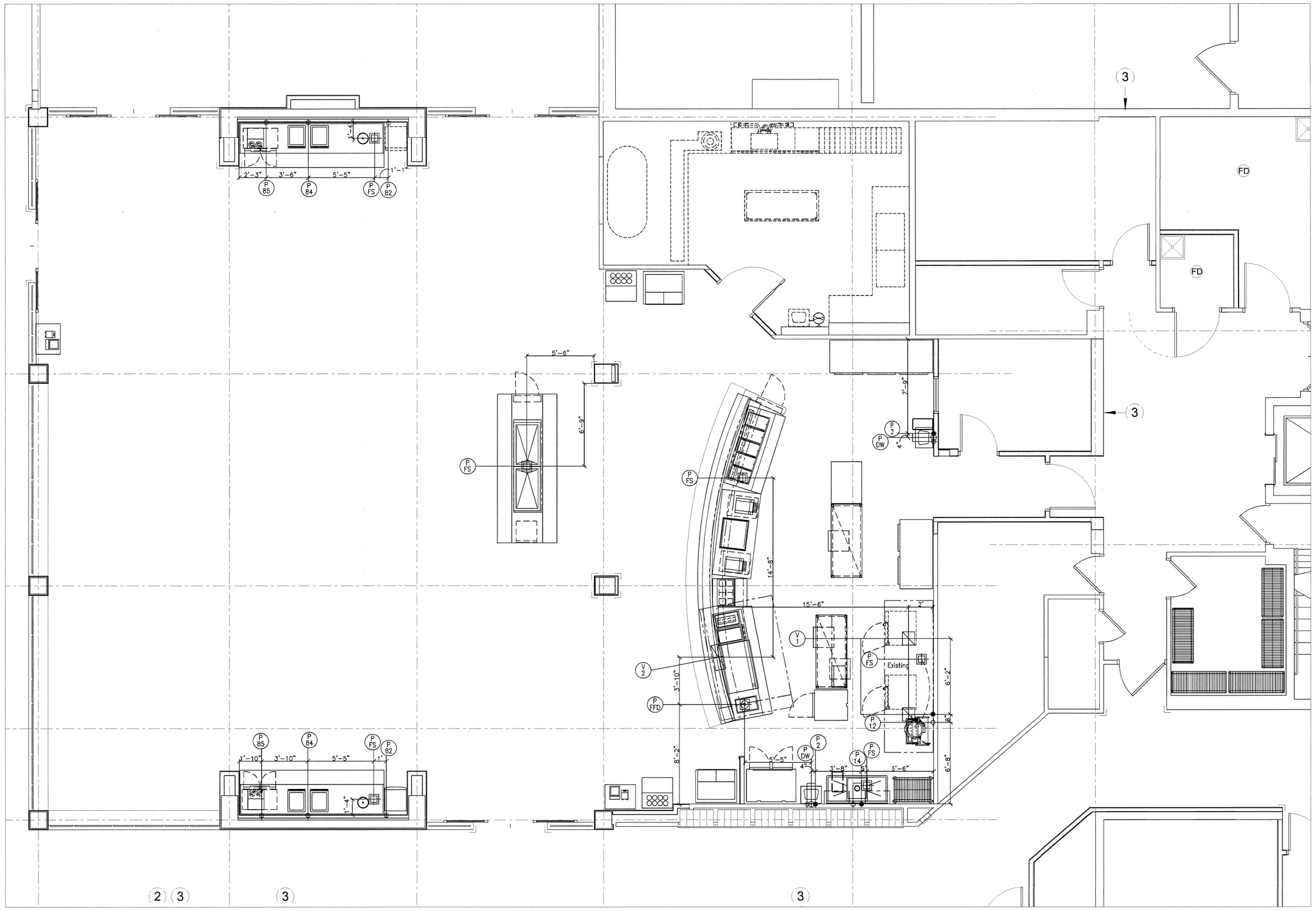

1 EQUIPMENT PLAN
1/4" = 1'-0"

PLUMBING SCHEDULE

CONN.	ITEM	DESCRIPTION	HW	CW	WASTE	COMMENTS
P02	02	Hand Sinks	1/2", +12"	1/2", +12"	DW, 2", +18"	
P08	08	Combi Steamers		Vfy.	IW, to FS	Existing; vfy. requirements
P12	12	20 Qt. Kettle on Stand	1/2", +18"	1/2", +18"	IW, to existing floor drain	
P14	14	Vegetable Prep. Sink	1/2", +12"	1/2", +12"	IW, 1-1/2", to FS	
P42	42	Hot Food Well			IW, 1", to FFD	1" copper pipe to 1" flexible hose with elbow
P52	52	Hot Food Wells			(5) IW, 1" to FS	1" copper pipe to 1" flexible hose with elbow
P64	64	Frost Top Unit			IW, 1", to FS	
P72	72	Drop-In Cold Pans			IW, 1" to FS	
P82	82	Ice Maker/Dispenser		1/2", +30"	IW, 3/4", to FS	
P84	84	Juice Machines		1/2", +48"	IW, 1", to FS	
P85	85	Coffee Units		1/2", +48"	IW, 1", to FS	

VENTILATION SCHEDULE

CONN.	ITEM	DESCRIPTION	TYPE	TOTAL CFM	STA. PRESS	DUCT SIZE	COMMENTS	AFF
V01	10	Vapor Hood	Exhaust	1862	.084"	(2) 12" x 13"		DFA +108"
V02	36	Exhaust Hood	Exhaust	2681	.969"	10" x 25"		DFA +108"

PLUMBING ROUGH-IN NOTES

1. THIS IS A ROUGH-IN DRAWING. DIMENSIONED ROUGH-IN AND SLEEVE DRAWINGS MUST BE APPROVED BY KEC.
2. DIMENSIONS ARE GIVEN FROM FINISHED FACE OF WALLS, FLOOR, OR COLUMN CENTER LINES.
3. SERVICES SHOWN RELATE TO FOOD SERVICE REQUIREMENTS ONLY AND SHOW WHERE UTILITIES ARE TO BE STUBBED-IN. SEE ARCHITECTURAL/PLUMBING DRAWINGS FOR ADDITIONAL REQUIREMENTS. AREA FLOOR DRAINS (IF ANY) ARE SHOWN ON OTHER DRAWINGS.
4. GENERAL CONTRACTOR IS RESPONSIBLE FOR:
   - ALL WATER, HOT WATER (140°F.), WASTE, GAS, STEAM, AND HVAC SERVICE TO EQUIPMENT, INCLUDING PIPING FITTINGS, SLEEVES, STOPS, VALVES, TRAPS, CLEANOUTS, INSULATION, AND HARDWARE UP TO AND INCLUDING FINAL CONNECTIONS TO EQUIPMENT.
   - PROVISION OF ALL EXPOSED PIPING AND FITTINGS IN CHROME OR STAINLESS STEEL IN KITCHEN.
   - INDIVIDUALLY VALVING EACH SUPPLY CONNECTION.
   - INTERCONNECTING VENTILATORS AND CONTROL PANELS, DETERGENT SYSTEMS, WASTE DISPOSER SYSTEMS, AND WAREWASHER BOOSTER HEATER.
   - PROVIDING ALL GREASE INTERCEPTORS.
5. KEC WILL PROVIDE: VACUUM BREAKER (FOR DISPOSAL SYSTEM ONLY), KITCHEN EQUIPMENT SINK FAUCETS, WASTE AND SPECIAL FITTINGS, RINSE SPRAYS AND HOSES EXCEPT AS NOTED. MOUNTING AND FINAL CONNECTION IS BY THE GENERAL CONTRACTOR. PROVIDE CHECK, SIPHON, OR BLEEDER VALVES PER RELEVANT CODE.
6. FUTURE EQUIPMENT CONNECTIONS ARE TO BE COMPLETELY ROUGHED-IN WITH COVER PLATES ON ROUGH-IN POINTS.
7. KEC IS RESPONSIBLE FOR COORDINATION/REVISION OF CONNECTIONS WITH PROJECT ENGINEERS AND CONTRACTORS FOR ANY FOOD SERVICE EQUIPMENT SUBSTITUTED FOR THE MANUFACTURER AND MODEL NUMBER SPECIFIED.
8. ALL OSD, FFD, FS, AND AFD FIXTURES SHALL BE PROVIDED WITH REMOVABLE STRAINERS AND OPEN, GRATE-FREE AREAS DIRECTLY UNDER INDIRECT WASTES. FTD FIXTURES SHALL INCLUDE LIFT-OUT HEAVY DUTY SUBWAY GRATES IN SECTIONS. ALL FIXTURES AND BODIES SHALL BE NEITHER RAISED NOR DEPRESSED BUT SHALL BE FLUSH TO THE SURROUNDING FINISHED FLOOR SURFACE, UNLESS OTHERWISE REQUIRED BY LOCAL CODE.
9. ALL FLOOR STUBS, (INCLUDING ANY PLUMBING VALVES OR ANY PARTS THEREOF SHALL BE ROUGHED-IN NOT TO EXCEED +5-3/4" AFF UNDER ANY EQUIPMENT.

PLUMBING/MECHANICAL SYMBOLS

P		PLUMBING REFERENCE SYMBOL
V		VENTILATION REFERENCE SYMBOL
— —	IC	EQUIPMENT UTILITY INTERCONNECTION
○	CW	COLD WATER
●	HW	HOT WATER
○	DW	DIRECT OR TIGHT WASTE
○	PVC	6" OPEN PVC CONDUIT
○	EMT	6" OPEN EMT CONDUIT
◉	AFD	4" AREA FLOOR DRAIN (CONVENIENCE) FLUSH TO FLOOR
⊕	FFD	4" FUNNEL FLOOR DRAIN, FLUSH TO FLOOR
▦	FS	4" FLOOR SINK, FLUSH TO FLOOR
⊕	OSD	4" OPEN SITE DRAIN (HUB) WITH STRAINER
●	G	GAS ROUGH-IN DFA+
	MBTUH	1000 BTU PER HOUR
	DFA+	ROUGH-IN MADE TO DISTANCE AFF FROM ABOVE
	PRV	PRESSURE RELIEF VALVE
△	POC	POINT OF CONNECTION, BRANCH FROM ADJACENT STUB
▣	W/D	WASHER/DRYER SET, LAUNDRY BOX
○	FTD	FLOOR TRENCH DRAIN (2" DIA) FLUSH TO FLOOR
●D	HS	HAND SINK GROUP
⊘		EXHAUST FLUE/RISER (NO FAN)
⊠		VENTILATION SUPPLY DUCT
⊠		VENTILATION EXHAUST DUCT
◪	GRV	GENERAL AREA VENT. BY G.C.

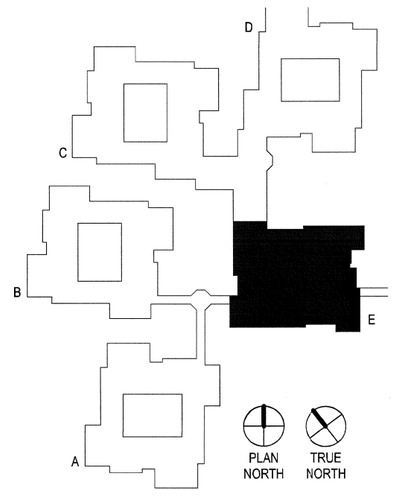

KEY PLAN
1" = 100'-0"

TRICON FOODSERVICE CONSULTANTS, INC.
344 MAPLE AVENUE WEST, #325
VIENNA, VA 22180 USA
703 242-7020
tricon.tricon1@verizon.net

Issuances:	Date
100% Construction Documents Submission	02/24/12
95% Construction Documents	02/10/12
60% Design Development	01/20/12
Schematic Design	11/30/11

ARCHITECT / ENGINEERS:

Oudens Knoop Knoop + Sachs Architects
2 Wisconsin Circle / Suite 820
Chevy Chase, MD 20815-7003
Tel: (301) 718-0080
Fax: (301) 718-9520

HENRY ADAMS
Consulting Engineers
Mechanical Electrical & Plumbing Engineers

Henry Adams, LLC Consulting Engineers
600 Baltimore Avenue
Baltimore, MD 21204
Tel: (410)296-6500
Fax: (410)296-3156

Woods Peacock Engineering Consultants
Halifax Office Park
5250 Cherokee Avenue, Suite 420
Alexandria, VA 22312-2052
Tel: (703) 658-4400
Fax: (703) 658-4404

Patton Harris Rust & Associates
A Pennoni Company
117 East Piccadilly Street, Suite 308
Winchester, VA 22601-5002
Tel: (540) 667-2139
Fax: (540) 665-0493

Stamp/Seal

Approved: Project Director

Drawing Title: KITCHEN PLUMBING ROUGH-IN PLAN

Project Title: BUILDING 502 E WING RENOVATION

Location: MARTINSBURG, WV

Date: 01/20/12 | Checked: PEM | Drawn: SHL

VA Project Number: 613-12-101

Building Number: 502

Drawing Number: K300

Office of Construction and Facilities Management

Department of Veterans Affairs

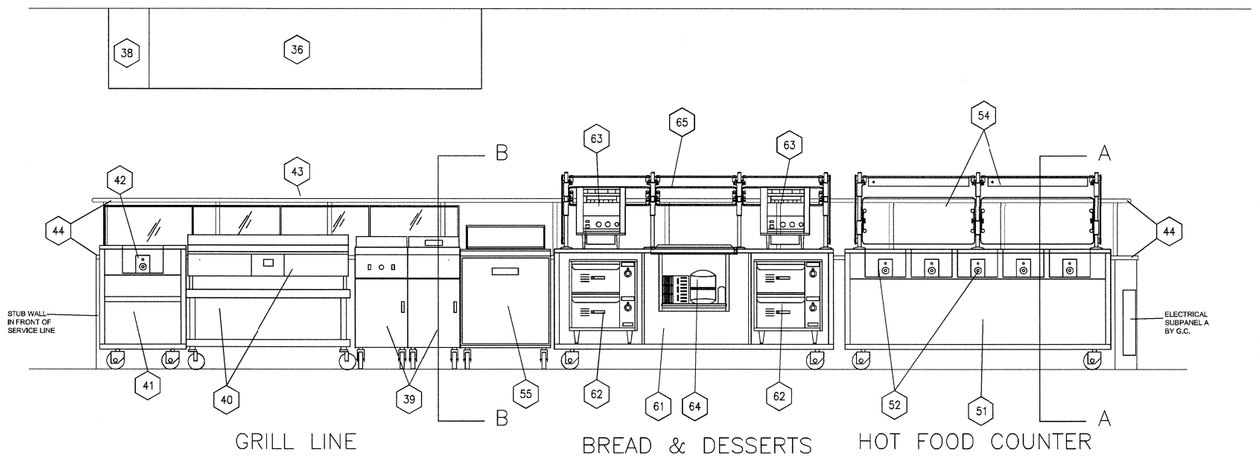

GRILL LINE BREAD & DESSERTS HOT FOOD COUNTER

SCALE: 1/2" = 1'-0"

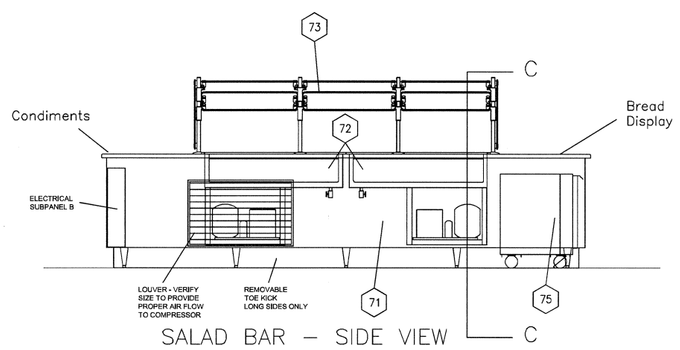

SALAD BAR – SIDE VIEW

SCALE: 1/2" = 1'-0"

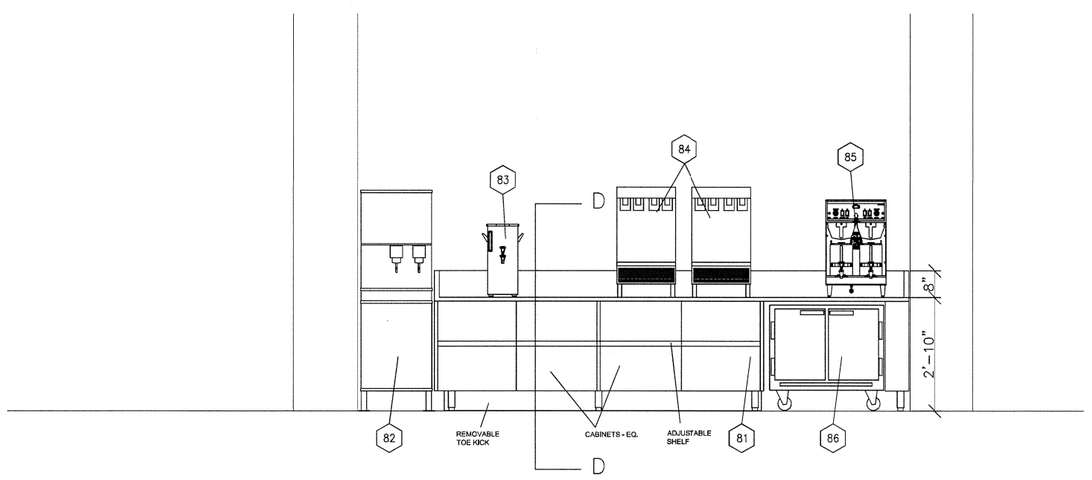

BEVERAGE COUNTER (MIRROR FOR SECOND STATION)

SCALE: 1/2" = 1'-0"

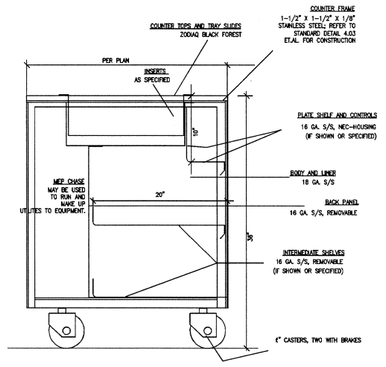

SERVICE COUNTER SECTION – TYPICAL

SECTION "A–A"

SCALE: 1" = 1'-0"

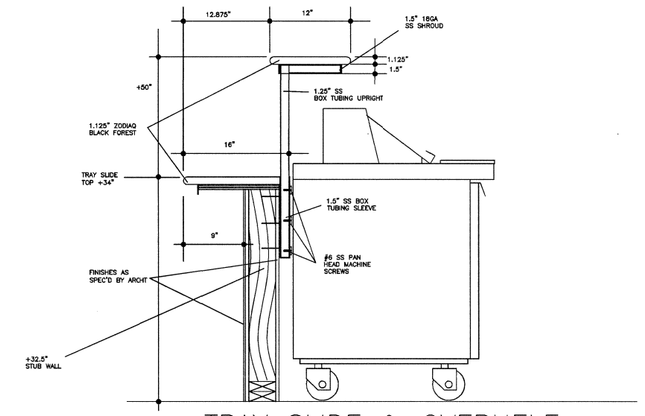

TRAY SLIDE & OVERHELF SECTION – TYPICAL

SECTION "B–B"

SCALE: 1" = 1'-0"

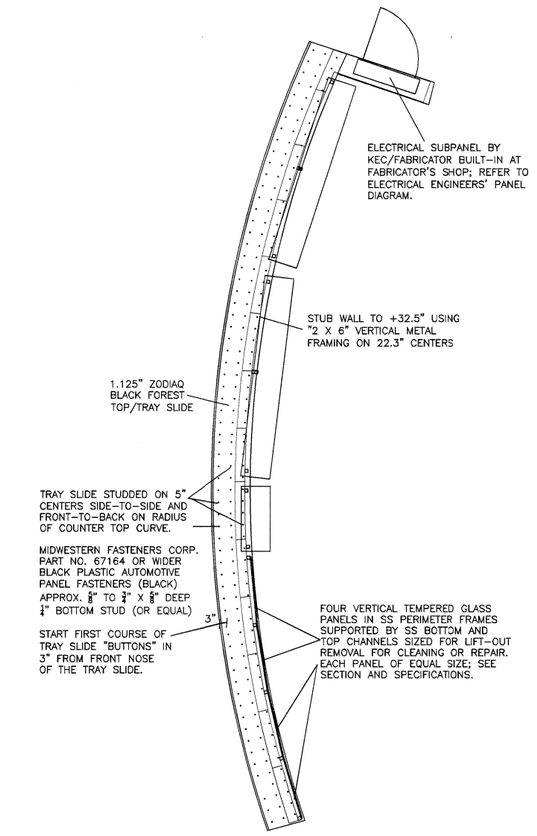

SPECIAL DETAIL – PLAN VIEW

FIXED-IN-PLACE ARCHITECTURAL MILLWORK AND PROTECTOR CASEWORK

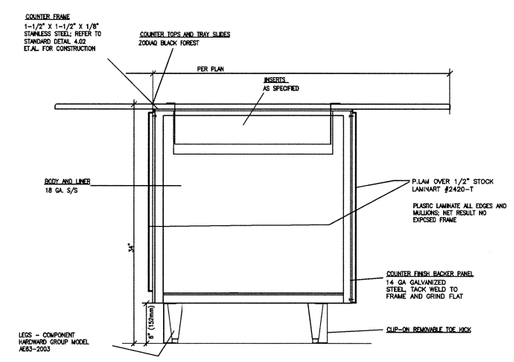

SALAD BAR SECTION

SECTION "C–C"

SCALE: 1" = 1'-0"

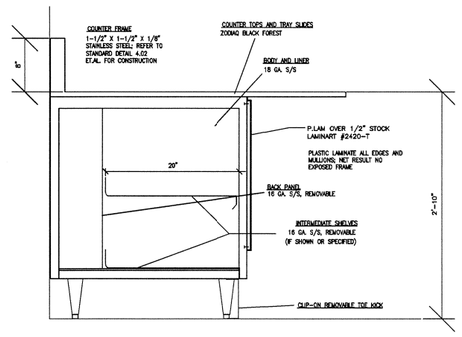

BEVERAGE COUNTER SECTION

SECTION "D–D"

SCALE: 1" = 1'-0"

TRICON FOODSERVICE CONSULTANTS, INC.
344 MAPLE AVENUE WEST, #325
VIENNA, VA 22180 USA
703 242-7020
tricon.tricon1@verizon.net

100% Construction Documents Submission	02/24/12
95% Construction Documents	02/10/12
60% Design Develpment	01/20/12
Schematic Design	11/30/11
Issuances:	Date

ARCHITECT / ENGINEERS:

Oudens Knoop Knoop + Sachs Architects
2 Wisconsin Circle / Suite 820
Chevy Chase, MD 20815-7003
Tel: (301) 718-0080
Fax: (301) 718-9520

HENRY ADAMS
Consulting Engineers
Mechanical Electrical & Plumbing Engineers

Henry Adams, LLC Consulting Engineers
600 Baltimore Avenue
Baltimore, MD 21204
Tel: (410)296-6500
Fax: (410)296-3156

Woods Peacock Engineering Consultants
Halifax Office Park
5250 Cherokee Avenue, Suite 420
Alexandria, VA 22312-2052
Tel: (703) 658-4400
Fax: (703) 658-4404

Patton Harris Rust & Associates
A Pennoni Company
117 East Piccadilly Street, Suite 308
Winchester, VA 22601-5002
Tel: (540) 667-2139
Fax: (540) 665-0493

Stamp/Seal

Approved: Project Director

Drawing Title: FOODSERVICE ELEVATIONS

Project Title: BUILDING 502 E WING RENOVATION

Location: MARTINSBURG, WV

Date: 01/20/12 | Checked: PEM | Drawn: SHL

VA Project Number: 613-12-101

Building Number: 502

Drawing Number: K400

Office of Construction and Facilities Management

Department of Veterans Affairs

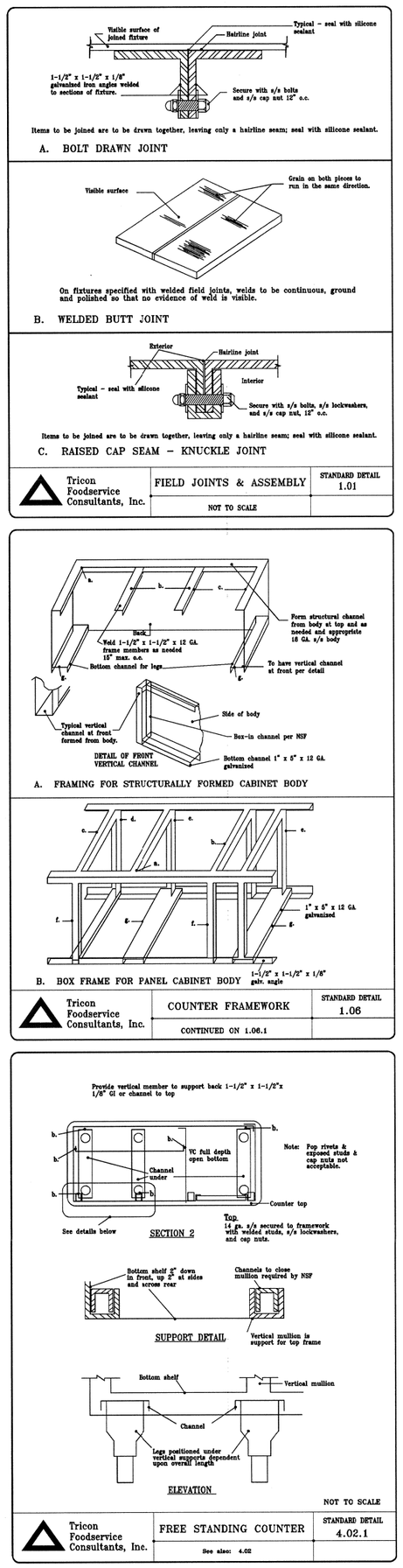

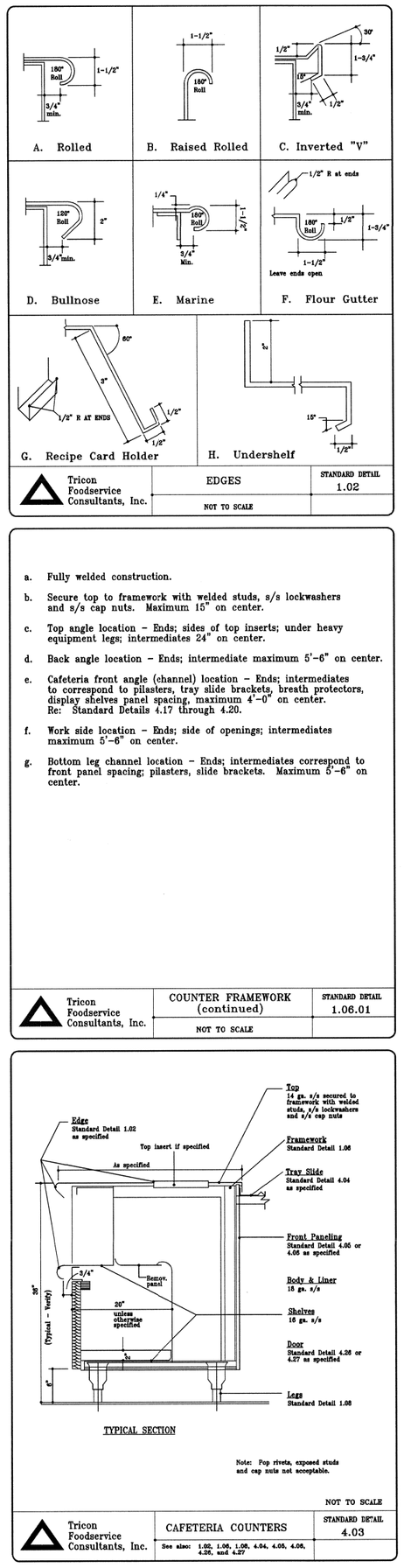

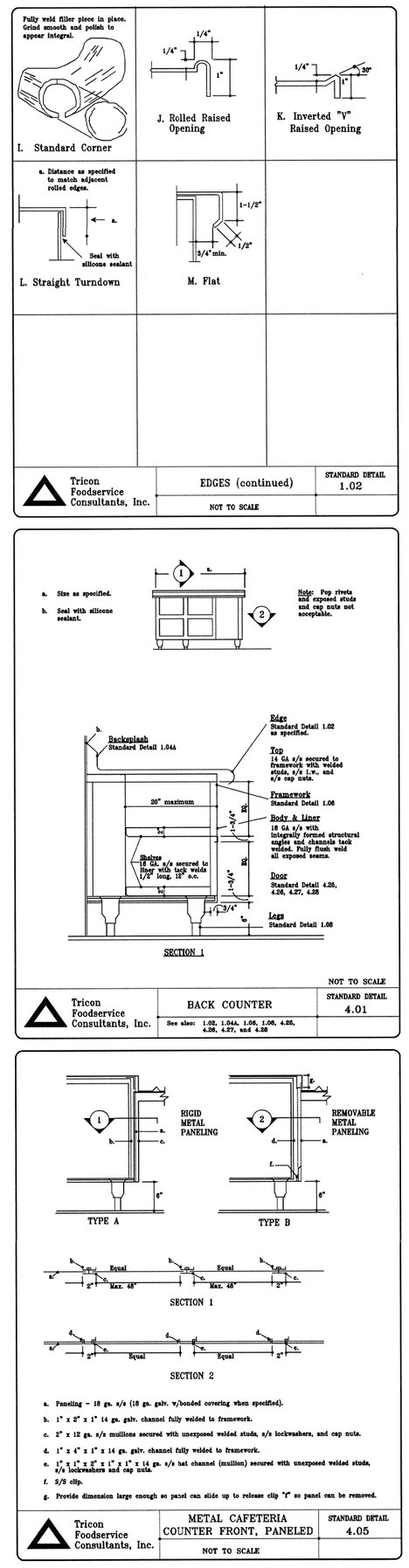

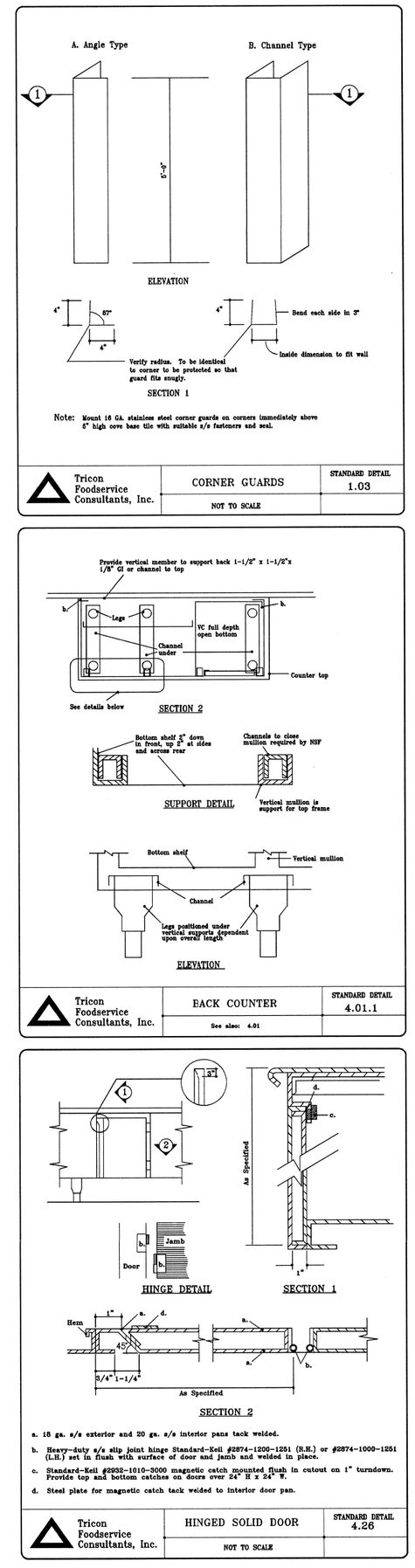

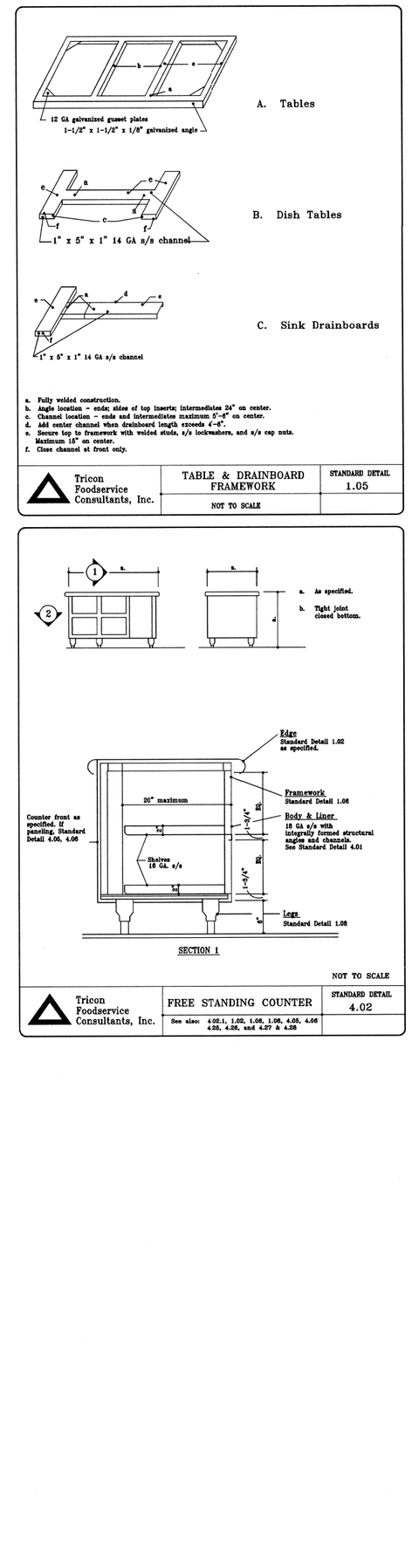

a. Fully welded construction.

b. Secure top to framework with welded studs, s/s lockwashers and s/s cap nuts. Maximum 15" on center.

c. Top angle location – Ends; sides of top inserts; under heavy equipment legs; intermediates 24" on center.

d. Back angle location – Ends; intermediate maximum 5'-6" on center.

e. Cafeteria front angle (channel) location – Ends; intermediates to correspond to pilasters, tray slide brackets, breath protectors, display shelves panel spacing, maximum 4'-0" on center. Re: Standard Details 4.17 through 4.20.

f. Work side location – Ends; side of openings; intermediates maximum 5'-6" on center.

g. Bottom leg channel location – Ends; intermediates correspond to front panel spacing; pilasters, slide brackets. Maximum 5'-6" on center.

Tricon Foodservice Consultants, Inc.
COUNTER FRAMEWORK (continued)
STANDARD DETAIL 1.06.01
NOT TO SCALE

Issuances:	Date
100% Construction Documents Submission	02/24/12
95% Construction Documents	02/10/12
60% Design Development	01/20/12
Schematic Design	11/30/11

ARCHITECT / ENGINEERS:

Oudens Knoop Knoop + Sachs Architects
2 Wisconsin Circle / Suite 820
Chevy Chase, MD 20815-7003
Tel: (301) 718-0080
Fax: (301) 718-9520

HENRY ADAMS
Consulting Engineers
Mechanical Electrical & Plumbing Engineers

Henry Adams, LLC
Consulting Engineers
600 Baltimore Avenue
Baltimore, MD 21204
Tel: (410)296-6500
Fax: (410)296-3156

Woods Peacock Engineering Consultants
Halifax Office Park
5250 Cherokee Avenue, Suite 420
Alexandria, VA 22312-2052
Tel: (703) 658-4400
Fax: (703) 658-4404

Patton Harris Rust & Associates
A Pennoni Company
117 East Piccadilly Street, Suite 308
Winchester, VA 22601-5002
Tel: (540) 667-2139
Fax: (540) 665-0493

Stamp/Seal

Approved: Project Director

Drawing Title: FOODSERVICE STANDARD DETAILS

Project Title: BUILDING 502 E WING RENOVATION

VA Project Number: 613-12-101

Building Number: 502

Location: MARTINSBURG, WV

Date: 01/20/12 | Checked: PEM | Drawn: SHL

Drawing Number: K500

Office of Construction and Facilities Management

Department of Veterans Affairs