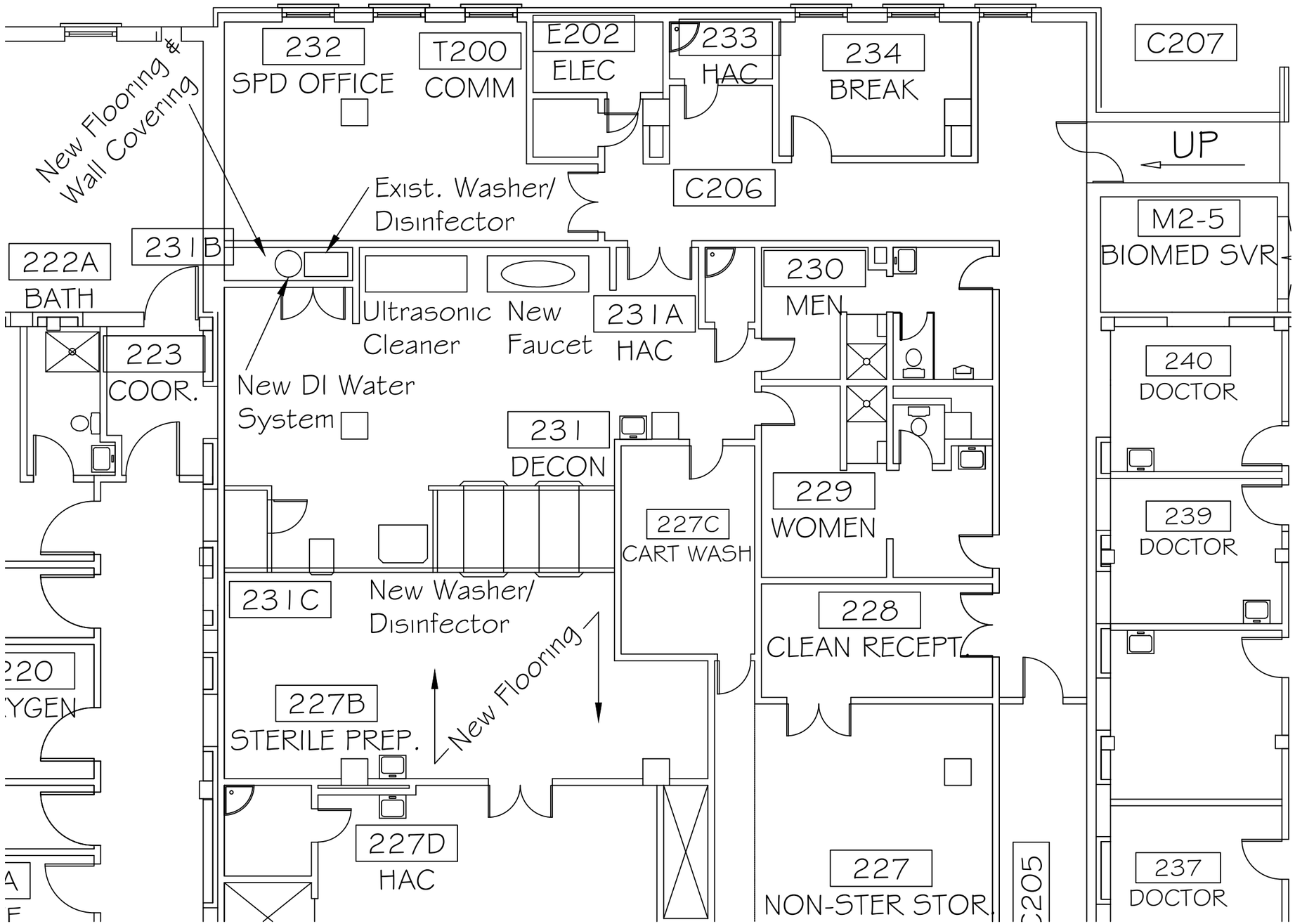

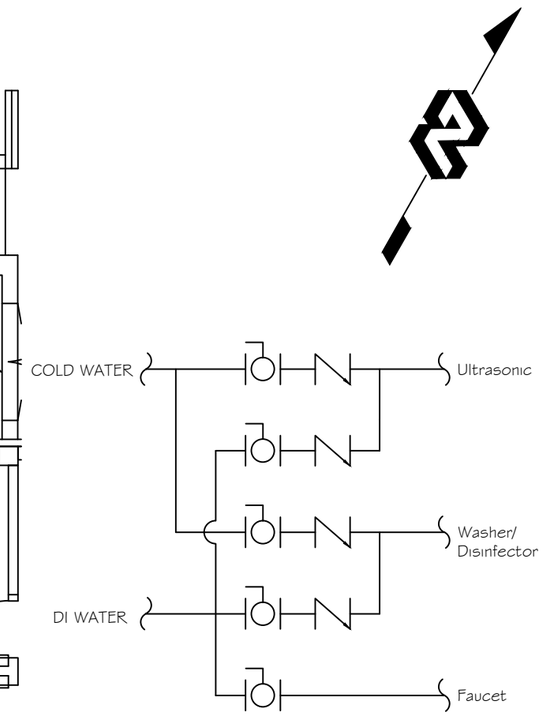

Piping and Valve Diagram
Not to Scale

Notes and/or Revisions:	Date

CUSTOM VA FORM 08-6231B, MAR 2008

Approved: Medical Center Facility Manager

Approved: Engineering Service Chief

Project Title: Site Prep for Washer and DI Water, Repair Floor, SPS

Measures one inch or not to scale! 0 — 1"

Scale: 1/8" = 1'-0"

Drawing Title: EQUIPMENT PLAN

Location: VA Healthcare Sys of the Ozarks

Checked: ELW | Drawn: JCH | Date: 29 MAR 12

Project Number: 564-12-113D

Building Number: ONE (01)

Drawing Number: AP102

Sheet 1 of 1

Engineering Service

Department of Veterans Affairs