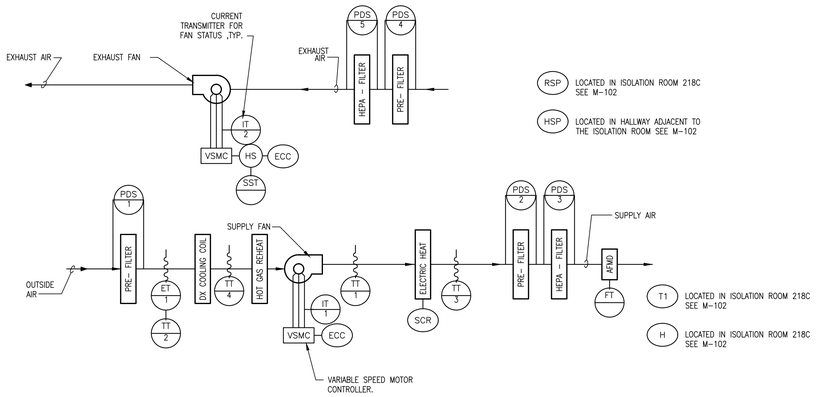

1 CONSTANT VOLUME, 100% OUTSIDE AIR STANDALONE ISOLATION ROOM RTU AND EXHAUST FAN

NTS

JOB: 542-11-106 BUILDING: ONE – TB ISOLATION ROOM			POINT LEGEND	SYSTEM OUTPUTS		SYSTEM INPUTS		SYSTEM SOFTWARE/CONTROL		PAGE:
				BINARY	ANA-LOG	BINARY	ANALOG	ALARM PROCESSING	APPLICATION/FUNCTION	
SYSTEM: CONSTANT VOLUME, 100% OUTSIDE AIR STANDALONE ISOLATION RTU AND EXHAUST FAN SYSTEM COMPONENT:	POINT ID	ABBREVIATION	SUMMER/DAY ALTERNATE SET ALARM PANEL SERVICE PORT DATA PROJECTOR DATA PORT DATA PROJECTOR<	DATA PORT FIRE/SMOKE DAMPER LOW FLOW SENSOR	TEMPERATURE LIMIT PRESSURE HUMIDITY SUPPLY PRESSURE HUMIDITY PROGRAM FLOW SWITCH SUPPLY FAN FLOW METER FLOW SWITCH	ALARM SHUT-DOWN CONTROL PROGRAM TEMPERATURE PROGRAM HUMIDITY ALARM SUPPLY PRESSURE HUMIDITY PROGRAM DISCHARGE AIR TEMPERATURE FAN CONTROL CONTROL PROGRAM	REMARKS
Outside Air Enthalpy	AI-1	ET-1					●		●	●	
Outside Air Temperature	AI-2	TT-2				●			●	●	
Coil Leaving Air Temperature	AI-3	TT-4		●		●	●			●	
				●		●		●		●	
Hot Gas Air Temperature	AI-4	TT-1		●		●			●	●	
Discharge Air Temperature	AI-5	TT-3				●	●	● ●			
EXHAUST FAN STATUS	BI-1	IT-2		●			●			●	
SUPPLY FAN STATUS	BI-2	IT-1		●			●			●	
HUMIDITY HIGH LIMIT	BI-3	HHL			●		●	●		●	
SUPPLY FAN VSMC ALARM	BI-4	SF-ALA		●			●			●	
EXHAUST FAN VSMC ALARM	BI-5	RF-ALA		●			●			●	
EXHAUST FAN VSMC	AO-1	EF-SPD	●						●	● ●	FULL COMMUNICATION
SUPPLY FAN VSMC	AO-2	SF-SPD	●						●	● ●	FULL COMMUNICATION
Air Flow Measurung Device	AI-16	FT				●			●	●	
Pressure Differential 1	AI-6	PDS-1				●	●			●	
Pressure Differential 2	AI-7	PDS-2				●	●			●	
Pressure Differential 3	AI-9	PDS-3				●	●			●	
Pressure Differential 4	AI-10	PDS-4				●	●			●	
Pressure Differential 5	AI-11	PDS-5				●	●			●	
Space Temperature	AI-12	T1				●	●	● ●	●	●	
Space Humidity	AI-13	H			●	●	●	●		●	
Space Static Pressure 1	AI-14	HSP				●	●		●	●	
Space Static Pressure 2	AI-15	RSP				●	●		●	●	
Space Temperature	AI-17	T2				●	●	● ●	●	●	

2 POINTS LIST FOR CONSTANT VOLUME, 100% OUTSIDE AIR STANDALONE ISOLATION RTU, EXHAUST FAN, AND ELECTRIC DUCT HEATER

NTS

SEQUENCE OF OPERATION FOR CONSTANT VOLUME, 100% OUTSIDE AIR STANDALONE ISOLATION ROOM RTU AND EXHAUST FAN

1. GENERAL

1.1 UNIT IS NORMALLY STARTED AND STOPPED VIA THE UNIT MOUNTED CONTROLLER. THE NORMAL NODE OF OPERATION IS WITH THE SUPPLY FAN ON. OCCUPANCY SCHEDULE IS 24 HRS A DAY, 365 DAYS A YEAR. UNIT CONTROL SHALL BE KEPT IN THE "AUTO" POSITION. "HAND" AND "OFF" POSITIONS SHALL BE USED ONLY FOR MAINTENANCE.

2. TEMPERATURE AND HUMIDITY CONTROL

2.1 SUPPLY AIR TEMPERATURE, SENSED BY TT-3, SHALL BE MODULATED VIA UNIT MOUNTED CONTROL PANEL TO MAINTAIN SPACE TEMPERATURE (STC-1) AND HUMIDITY (HC-1) (IN THE COOLING SEASON) BY STAGING DX COOLING, HOT GAS REHEAT, AND/OR ELECTRIC HEAT IN SEQUENCE.

2.2 THE UNIT SHALL MONITOR ET-1 (OUTSIDE AIR ENTHALPY) AND TT-2 AND UTILIZE AN ECONOMIZER MODE AS THE 1ST STAGE OF COOLING WHENEVER THE SPACE REQUIRES COOLING AND THE OUTSIDE AIR ENTHALPY IS BELOW THE CALCULATED SPACE ENTHALPY AND THE OUTSIDE AIR TEMPERATURE IS BELOW 65°F.

3. AIR FLOW CONTROL

3.1 THE SUPPLY FAN AIR FLOW SHALL BE CONSTANT AS SET DURING COMMISSIONING. THE SUPPLY FAN SHALL BE EQUIPPED WITH A VARIABLE SPEED DRIVE (VSMC). THE AIR FLOW MONITORING DEVICE (FT-1) SHALL BE MONITORED AND THE FAN SPEED ADJUSTED AS REQUIRED TO MAINTAIN THE CONSTANT VELOCITY AS THE SUPPLY AIR FILTERS LOAD.

3.2 THE EXHAUST FAN AIR FLOW SHALL BE VARIABLE AS REQUIRED TO MAINTAIN A MINIMUM -0.02" W.C. PRESSURE DIFFERENTIAL BETWEEN THE CONTROLLED ROOMS AND THE HALLWAY. THIS CONTROL LOOP WILL BE SELF CONTAINED WITHIN THE EXHAUST FAN'S VSCM AND CONTROL VIA RSP-1 AND HSP-1.

3.3 UPON A FAILURE IN THE EXHAUST FAN SEQUENCE, SENSOR, OR CONTROL LOOP THE FAN SHALL DEFAULT TO 100% (ADJ) FLOW.

4. EMERGENCY CONSTANT SPEED OPERATION

4.1 UPON FAILURE OF THE VSMC, THE SUPPLY AND/OR EXHAUST FANS SHALL BE STARTED/STOPPED MANUALLY AT THE CONTROL PANEL OR THE THROUGH THE BY-PASS STARTER. FANS SHALL THEN BE OPERATED AT CONSTANT SPEED.

SEQUENCE OF OPERATION FOR ELECTRIC DUCT HEATER REHEAT CONTROL

1. TEMPERATURE CONTROL

1.1 ROOM (218D) AIR TEMPERATURE, SENSED BY T MOUNTED IN ROOM, SHALL BE CONTROLLABLE BY STAGING THE ELECTRIC DUCT HEATER (EDH-1) ON OR OFF. CONTROL IS LIMITED TO MAINTAINING A HIGHER SPACE TEMPERATURE THAN ROOM 218C. EDH-1'S CONTROLLER AND THERMOSTAT SHALL COMMUNICATE WITH RTU-1 CONTROLLER ON BACNET PROTOCOLS AS CALLED OUT IN THE SPECIFICATIONS.

1.2 INTERNAL EDH-1 CONTROLS SHALL PROVE AIRFLOW BEFORE ALLOWING THE DUCT HEATER TO ENERGIZE.

3 ELECTRIC DUCT HEATER

NTS

FINAL CONSTRUCTION DOCUMENTS

Revisions:	Date

ARCHITECT/ENGINEERS:

APOGEE Consulting Group, PA
www.acg-pa.com
Raleigh, NC
Indianapolis, IN
Columbia, MD
Apogee Project # 2010 185

Professional Stamp/Seal: COMMONWEALTH OF PENNSYLVANIA, REGISTERED PROFESSIONAL, JOHN W. MATHEWS, ENGINEER, No. PE 78264

Drawing Title: MECHANICAL DETAILS

Approved: Project Director

Project Title: Department of Veterans Affairs, Replace HVAC System Building One - TB Unit

Location: Coatesville, PA

Date: June 14th, 2011

Checked: JWM

Project Number: 542-11-106

Building Number: Building 1

Drawing Number: M-502

Dwg. 6 of 12

Office of Construction and Facilities Management

Coatesville VA Medical Center

VA FORM 08-6231