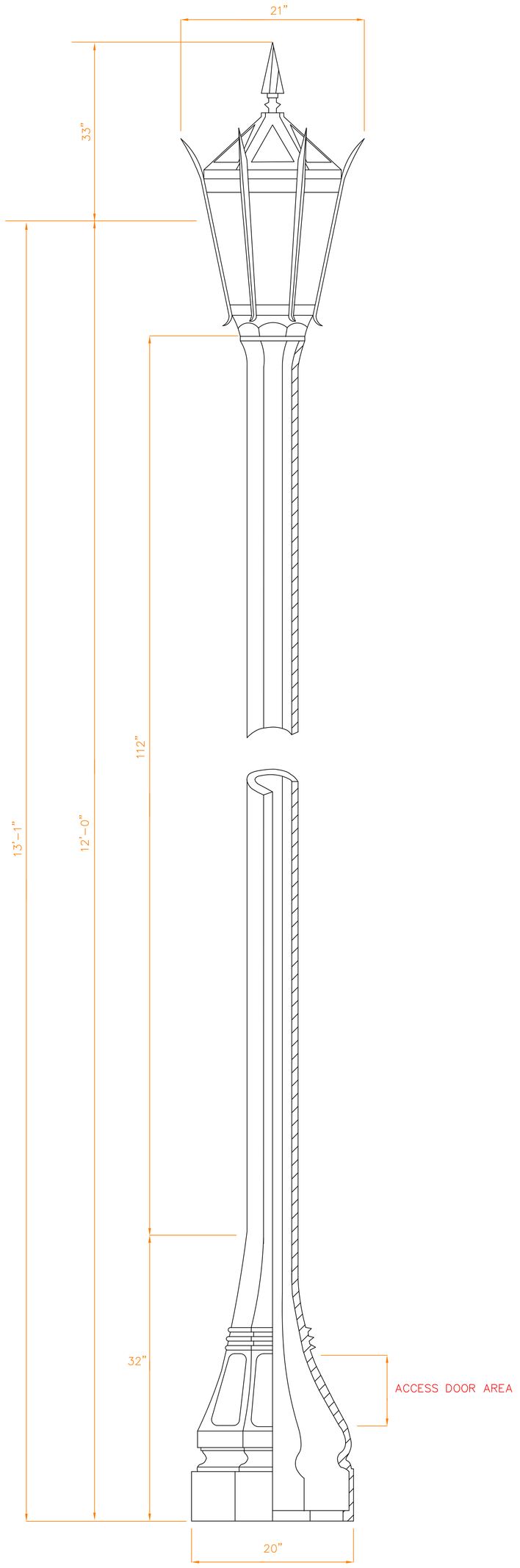

VA FURNISHED POSTS/LUMINARES

NO SCALE

ALUMINUM OCTAGONAL LUMINAIRE

LUMINAIRE– THE LUMINAIRE CONSISTS OF THREE BASIC COMPONENTS:

A. SLIP FITTER/SOCKET ASSEMBLY
B. MAIN LUMINAIRE OPTICAL SECTION
C. UPPER ROOF SECTION

THE LUMINAIRE IS AN 8 SIDED OCTAGONAL TAPERED DESIGN OF CAST ALUMINUM CONSTRUCTION HAVING NOMINAL DIMENSIONS AS FOLLOWS:

OVERALL HEIGHT– 33 INCHES
OVERALL WIDTH(TOP)– 21 INCHES
OVERALL WIDTH(BOTTOM)– 12 INCHES
PANEL WIDTH(TOP)– 5 INCHES
PANEL WIDTH(BOTTOM)– 3 1/4 INCHES
SLIP FITTER I.D.– 7 1/8 INCHES

SLIP FITTER/SOCKET ASSEMBLY– THE SLIP FITTER AND SOCKET ASSEMBLY IS CAST ALUMINUM FOR SLIP–FIT MOUNTING TO THE CAST POLE HAVING 7 INCHES O.D. TENON. THE FITTER HAS FOUR (4) STAINLESS STEEL SET SCREWS FOR SECURING THE TENON. THE FITTER IS PROVIDED WITH INTEGRALLY CAST BOSSES FOR 1 INCH WIDE BY 1/4 INCH THICK SOCKET MOUNTING SUPPORT STRAP. THE FITTER SERVES AS THE SUPPORT SEAT FOR THE INTEGRAL BALLAST/SOCKET ASSEMBLY. A MOGUL BASE UTILITY GRADE SOCKET IS MOUNTED TO THE SUPPORT STRAP. THE LUMINAIRE IS PROVIDED WITH AN INTEGRAL BALLAST/SOCKET ASSEMBLY FABRICATED AS A SINGLE UNITIZED COMPONENT FOR QUICK REMOVAL AND REPLACEMENT. BALLAST IS CONSTANT WATTAGE, MULTI–TAP, SUITABLE FOR OPERATION OF 175 WATT, MERCURY VAPOR BULB.

NOTE: A CUSTOM FABRICATED SLIP FITTER, ETC., MAY BE FURNISHED WITH FIXTURES TO FIT EXISTING HISTORIC POSTS TO BE RE–USED. VERIFY SIZE OF TENON (O.D.) AND QUANTITY IN FIELD.

MAIN LUMINAIRE OPTICAL SECTION– THE OPTICAL SECTION CONSISTS OF AN 8 SIDED CLEAR POLYEARBONATE PANEL ASSEMBLY SECURED TO CAST ALUMINUM OUTER RIBS. THE LUMINAIRE CAGE PROVIDES A TYPE 2 OF 5 PATTERN.

UPPER ROOF SECTION– THE ROOF SECTION IS AN 8 SIDED, 1 PIECE CAST FRAME DESIGN WITH SLOPED ALUMINUM PANELS AND CAST ALUMINUM FINIALS. THE ROOF ASSEMBLY IS BE WATERTIGHT AND OVERLAP THE TOP CAGE RING TO PREVENT WATER ENTERING. THE INSIDE OF THE ROOF ASSEMBLY IS PAINTED WITH WHITE REFLECTIVE EXTERIOR ENAMEL. THE ROOF ASSEMBLY IS HINGED TO THE TOP OF THE LANTERN CAGE AND SECURED WITH 1/4 INCH STAINLESS STEEL SCREWS. THE ENTIRE LUMINAIRE IS MANUFACTURED USING ONLY STAINLESS STEEL HARDWARE. LUMINAIRE FINISH IS PARK GREEN.

CAST IRON LAMP POST (ONE PIECE, HEAVY WALL)

POST– CAST IRON LAMP POST CONSISTS OF AN ORNAMENTAL 8 SIDED OCTAGONAL BASE MEASURING 20 INCHES, ACROSS FLATS, AND THEN TAPERING TO AN OCTAGONAL SECTION COLUMN WITH TOP DIMENSION 4 1/2 INCHES, ACROSS FLATS AT A POINT 3 INCHES BELOW TOP OF POST. THE POST BASE AND COLUMN IS A ONE–PIECE (1–PIECE) GRAY IRON CASTING PER ASTM SPECIFICATION A48–72, CLASS 30.

BASE– THE BASE IS PROVIDED WITH AN INTERNAL FLANGE WITH FOUR (4) RADIAL SLOTS ON 16 INCH DIAMETER BOLT CIRCLE FOR WITH 7/8 INCH DIAMETER NOMINAL GALVANIZED STEEL ANCHOR BOLTS 30 INCHES LONG WITH HOOK. THE BASE IS PROVIDED WITH A CAST IRON ACCESS DOOR FOR WIRING AND ANCHOR BOLT TIGHTENING. A CAST BOSS WITH 1/4 INCH BY 20 INCH THD. BLIND TAPPED HOLE IS ALSO PROVIDED OPPOSITE DOOR OPENING FOR GROUND STUD.

WALL THICKNESS– NOMINAL WALL THICKNESS OF BASE AND COLUMN IS AS FOLLOWS:

BASE FLANGE: 1 INCH
VERTICAL BASE: 9/16 INCH
ORNAMENTAL BASE WALL PORTION: 9/16 INCH
ACCESS DOOR AREA SECTION: 1/2 INCH
BASE OF COLUMN: 7/16 INCH
TOP OF COLUMN: 5/16 INCH

THE COLUMN TOP FLAIRS OUT TO A 7 INCH DIAMETER FITTER FOR USE WITH LUMINAIRE.

FINISH– THE CAST IRONPOSTS AND LTS. WAS ORIGNALLY PROVIDED WITH A SHOP COAT ONLY OF METAL PRIMER PAINT AND TWO FINISH COATS OF EXTERIOR AIR DRY ENAMEL. THE CONTRACTOR SHALL BE REQD TO RE–PAINT ALL 4 POSTS AND LTS. AFTER ERECTION.
VA UNIT C SUPV WILL PROVIDE INFO ON REQD PAINT AND COLOR MATCH.

WEIGHT– THE WEIGHT OF THE POST WITH DOOR IS 420 POUNDS, PLUS OR MINUS 5 PERCENT.

REQUIREMENTS– THE POSTS WERE MANUFACTERED AND CAST IN ACCORDANCE WITH THE AMERICAN ASSOCIATION OF STATE HIGHWAY AND TRANSPORTATION OFFICAILS, "STANDARD SPECIFICATIONS FOR STRUCTURAL SUPPORTS FOR HIGHWAY SIGNS, LUMINAIRES, AND TRAFFIC SIGNALS".

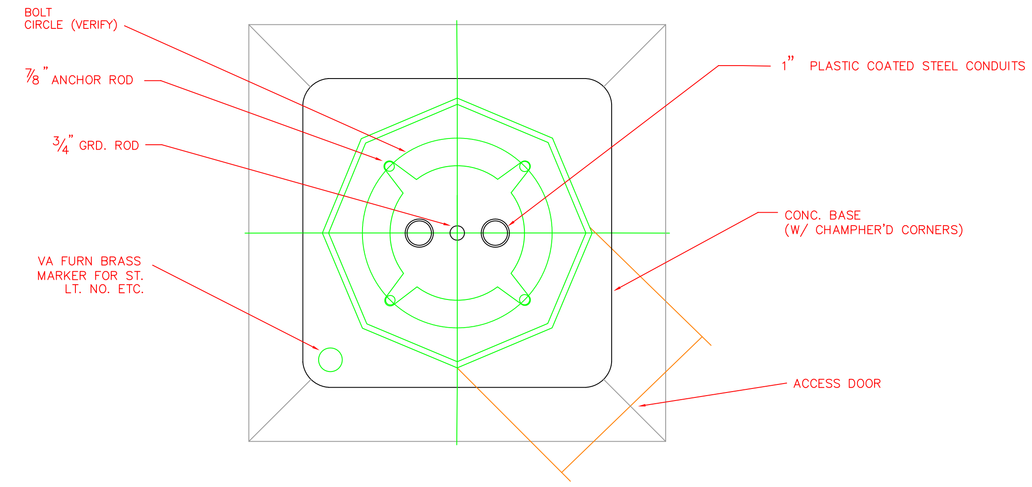

BOLT CENTERS FOR POSTS

(VERIFY EXACT SETTING W/VA FURN POSTS)

NO SCALE

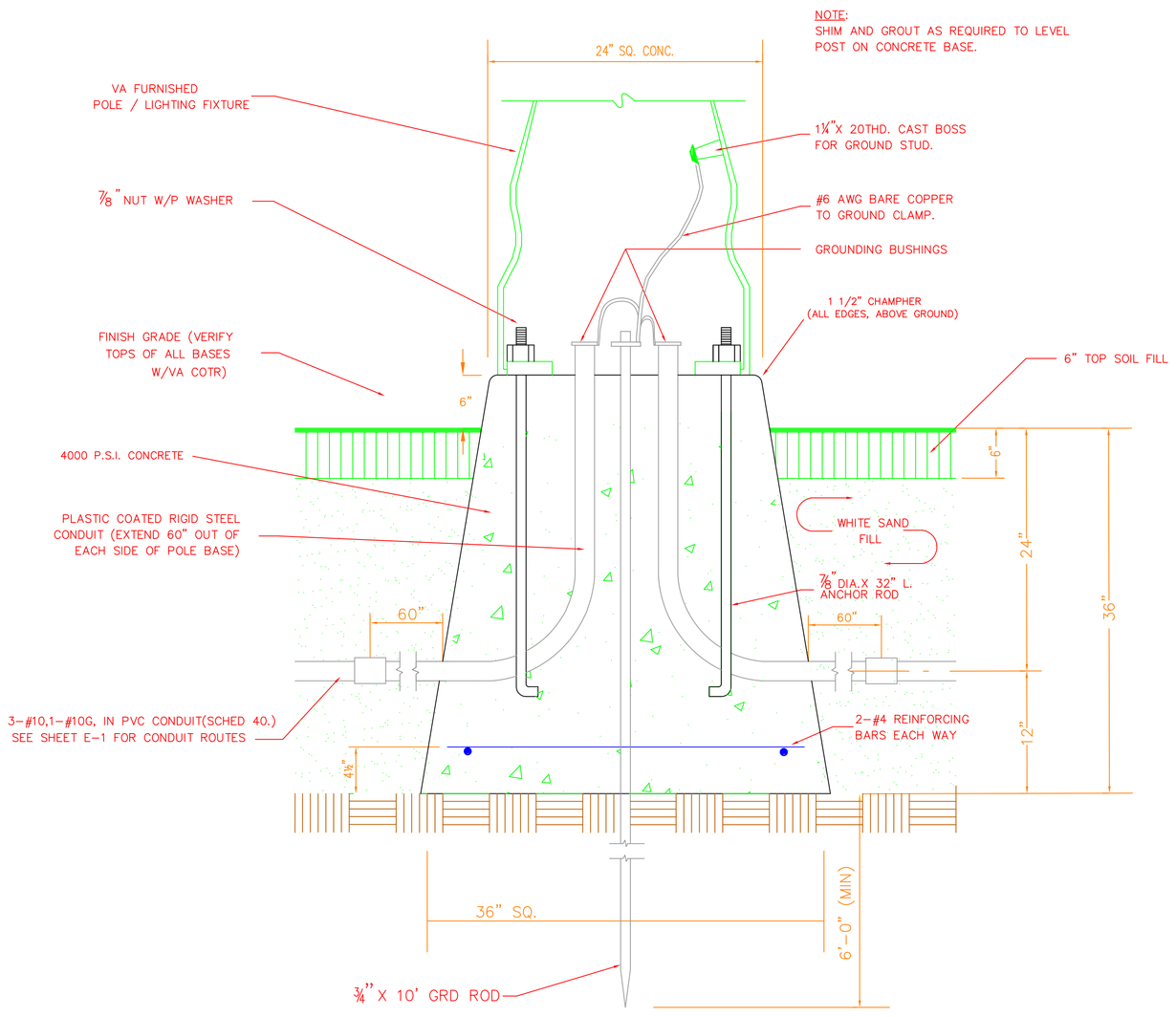

POST FOUNDATION / TRENCH DETAIL

NO SCALE

Revisions	Date

ARCHITECT
ADAMS CRAFT HERZ WALKER INC.
800 OAK RIDGE TURNPIKE
SUITE A–400
OAK RIDGE, TENNESSEE 37830–6988
CONTACT: LEON LAWSON
PHONE: (865) 482–4451
FAX: (865) 482–4454
E–MAIL: llawson@achw.com

STRUCTURAL
SPECTRA TECH, INC.
132 JEFFERSON CT.
OAK RIDGE, TENNESSEE 37830
CONTACT: DAVID BOGATY
PHONE: (865) 483–7210
FAX: (865) 483–7262
E–MAIL: dbogaty@spectratechinc.com

LANDSCAPE ARCHITECT
ADAMS CRAFT HERZ WALKER INC.
800 OAK RIDGE TURNPIKE
SUITE A–400
OAK RIDGE, TENNESSEE 37830–6988
CONTACT: BEN ADAMS
PHONE: (865) 482–4451
FAX: (865) 482–4454
E–MAIL: badams@achw.com

ELECTRICAL
SPECTRA TECH, INC.
132 JEFFERSON CT.
OAK RIDGE, TENNESSEE 37830
CONTACT: LEE RAINES
PHONE: (865) 483–7210
FAX: (865) 483–7262
E–MAIL: lraines@spectratechinc.com

Drawing Title: POST LIGHT DETAILS
Project Title: DOM. PATIO– SMOKING SHELTER
Date: 7/1/08
Project No.: 621–07–117
Approved: Chief, Facility Mgt. Svc.: DANIEL B. SNYDER III, PE, MBA
Building Number: 160
Checked: UTLEY
Drawn: CLC
DRAWING NO.: E–3
Dwg. 12 Of 13
Approved: Chief, Facility & Plant Mgt. Div.: KEVIN MILLIKEN
Location: MOUNTAIN HOME, TN

Department of Veterans Affairs