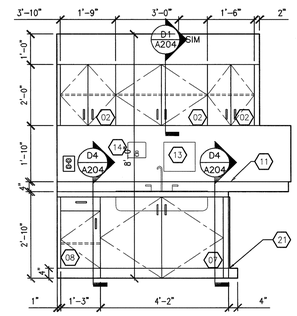

B1 SCOPE PREP ELEVATION
1/2" = 1'-0"

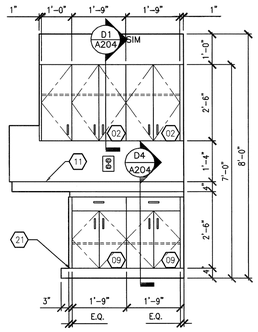

B2 SCOPE PREP ELEVATION
1/2" = 1'-0"

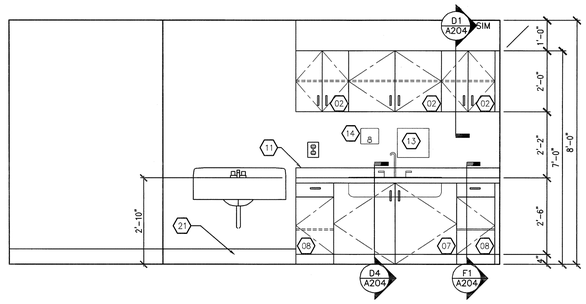

B3 SCOPE PREP ELEVATION
1/2" = 1'-0"

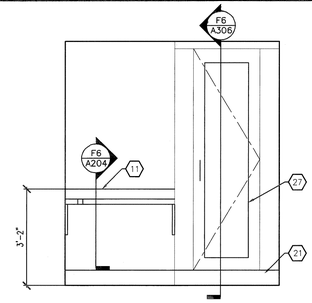

B6 SCOPE WASH ELEVATION
1/2" = 1'-0"

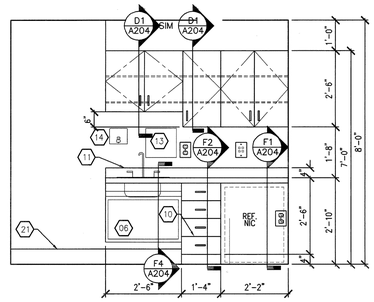

B7 MEDS ROOM ELEVATION
1/2" = 1'-0"

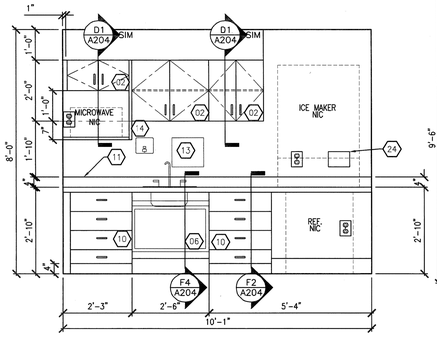

C1 NOURISHMENT ELEVATION
1/2" = 1'-0"

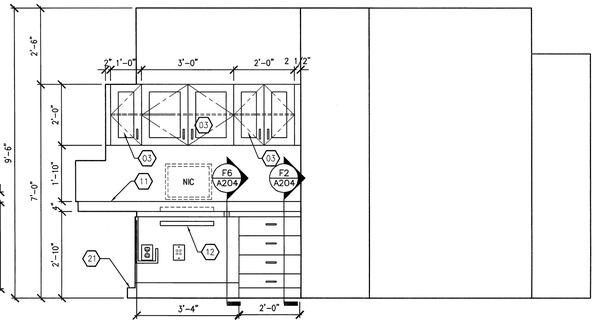

C3 DICTATION ELEVATION IN PROCEDURE ROOM
1/2" = 1'-0"

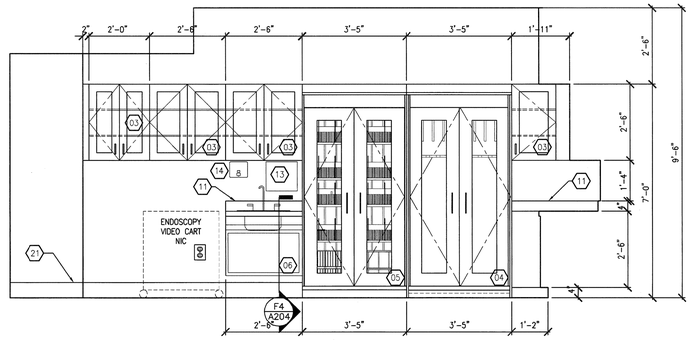

C6 PROCEDURE ROOM ELEVATION
1/2" = 1'-0"

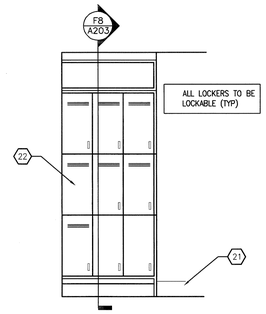

C8 STAGING ROOM ELEVATION
1/2" = 1'-0"

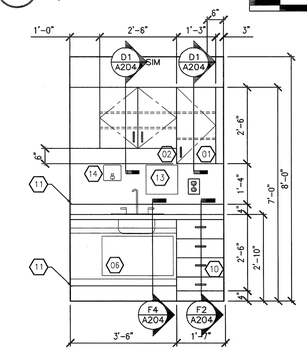

E1 ISOLATION ANTE ROOM AT PREP ROOM ELEVATION
1/2" = 1'-0"

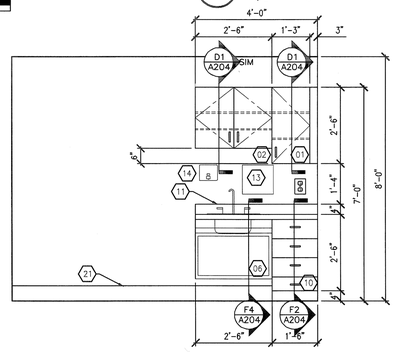

E2 ANTE ROOM AT ISOLATION EXAM ELEVATION
1/2" = 1'-0"

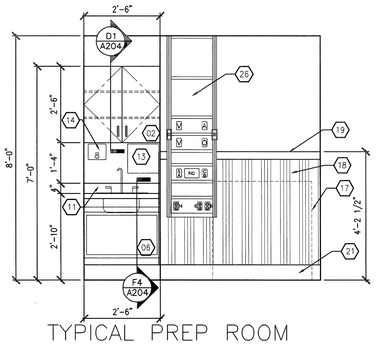

E4 TYPICAL PREP ROOM CASEWORK ELEVATION
1/2" = 1'-0"

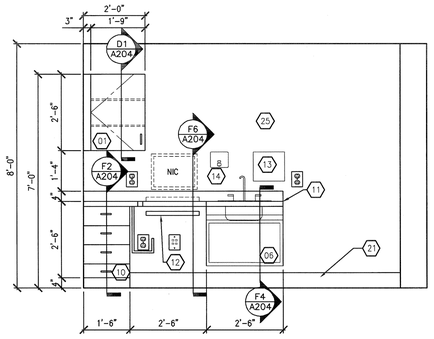

E7 TYPICAL EXAM ROOM CASEWORK ELEVATION
1/2" = 1'-0"

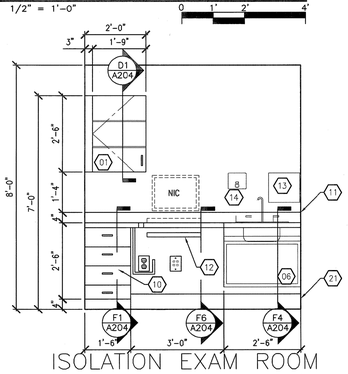

F1 ISOLATION EXAM ROOM CASEWORK ELEVATION
1/2" = 1'-0"

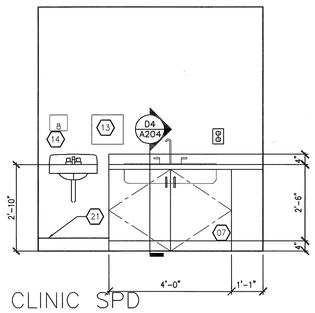

F2 CLINIC SPD EXAM ELEVATION
1/2" = 1'-0"

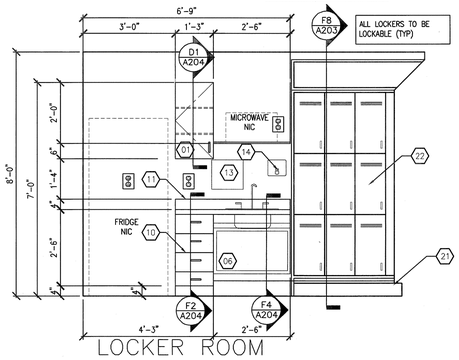

F4 LOCKER ROOM CASEWORK ELEVATION
1/2" = 1'-0"

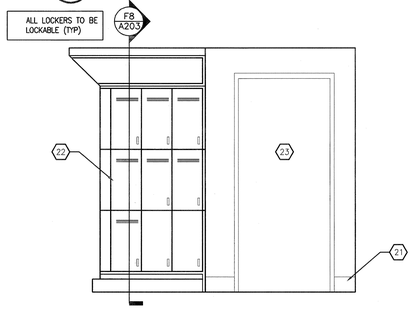

F7 LOCKER ROOM CASEWORK ELEVATION
1/2" = 1'-0"

GENERAL SHEET NOTES

A. ALL EXPOSED EXTERIOR CASEWORK SURFACES TO BE FINISHED WITH SCHEDULED PLASTIC LAMINATE.

B. ALL EXPOSED INTERIOR CASEWORK SURFACES TO BE FINISHED WITH WHITE PLASTIC LAMINATE.

C. CASEWORK CONTRACTOR TO VERIFY ALL DIMENSIONS PRIOR TO FABRICATION.

SHEET KEYNOTES (X)

01. SINGLE DOOR PLASTIC LAMINATE WALL CABINET WITH ADJUSTABLE SHELVES ON RECESSED STANDARDS.
02. DOUBLE DOOR PLASTIC LAMINATE WALL CABINET WITH ADJUSTABLE SHELVES ON RECESSED STANDARDS.
03. TEMPERED GLASS IN PLASTIC LAMINATE FRAME WALL CABINET WITH ADJUSTABLE SHELVES ON RECESSED STANDARDS.
04. METAL ENDOSCOPE STORAGE CABINET WITH VENT AND BASE DRIP PAN. HINGED TEMPERED GLASS DOORS PURCHASED BY OWNER AND INSTALLED BY CONTRACTOR.
05. METAL MEDICAL STORAGE CABINET WITH ADJUSTABLE SHELVES, WIRE DRAWERS AND PLASTIC STORAGE BINS. HINGED TEMPERED GLASS DOORS PURCHASED BY OWNER AND INSTALLED BY CONTRACTOR.
06. PLASTIC LAMINATE ADA COMPLIANT SINK BASE CABINET WITH REMOVABLE PANEL FOR PLUMBING ACCESS.
07. PLASTIC LAMINATE ADA COMPLIANT SINK BASE CABINET WITH INTEGRAL DOOR AND TOE KICK WHICH OPENS AND RECESS UNDER CABINET.
08. PLASTIC LAMINATE BASE CABINET WITH DRAWER AND SINGLE DOOR.
09. PLASTIC LAMINATE BASE CABINET WITH DRAWER AND DOUBLE DOORS.
10. PLASTIC LAMINATE BASE CABINET WITH FOUR EQUALLY SPACED DRAWERS.
11. SOLID SURFACE COUNTERTOP WITH INTEGRAL BACKSPLASH AND SIDE SPLASHING WHERE APPLICABLE.
12. COMPUTER WORKSTATION WITH 2" GROMMET, UNDERMOUNTED METAL CPU HOLDER AND ADJUSTABLE/RETRACTABLE KEYBOARD TRAY.
13. PAPER TOWEL HOLDER PURCHASED BY OWNER AND INSTALLED BY CONTRACTOR. CONTRACTOR TO SUPPLY NECESSARY BLOCKING.
14. SOAP DISPENSER PURCHASED BY OWNER AND INSTALLED BY CONTRACTOR. CONTRACTOR TO SUPPLY NECESSARY BLOCKING.
15. CEILING MOUNTED CURTAIN TRACK AND CURTAIN.
16. NOT USED.
17. EXAM TABLE, NIC.
18. RIGID SHEET VINYL WAINSCOT. SEE FINISH SCHEDULE.
19. PVC CHAIR RAIL. SEE FINISH SCHEDULE.
20. PVC CORNER GUARD. SEE FINISH SCHEDULE.
21. WALL BASE AS SCHEDULED. SEE FINISH SCHEDULE.
22. METAL LOCKERS.
23. DOOR AS SCHEDULED.
24. PLUMBING BOX. COORDINATE ELEVATION WITH ICE MACHINE.
25. VINYL WALL COVERING, THIS WALL ONLY IN EXAM ROOMS.
26. 19" WIDE SURFACE MOUNTED PATIENT HEADWALL.
27. CLEAN SCOPE PASS THRU CABINET. REFER TO EQUIPMENT DRAWINGS FOR MORE INFORMATION.

100% SUBMITTAL

REVISION NO.	REVISION DESCRIPTION	By	Date
Revisions			

Department of Veterans Affairs
Medical Center
1826 Veterans Blvd.
Dublin, Ga. 31021

SEAL

Architect/Engineer Address
Harrell, Saltrick & Hopper
Design & Management Solutions for the Built Environment
151 LOCUST STREET, SUITE #1
AVONDALE ESTATES, GA 30002
P 704.814.1325
F 704.321.0833
WWW.HSHPC.COM
COPYRIGHT © 2011 HARRELL SALTRICK & HOPPER, PC
HSH PROJECT # 10004

Recommended Approvals:	
1. MEDICAL DIRECTOR	6. OPERATIONS SERVICE LINE MANAGER
2. ASSOCIATE DIRECTOR	7. INFECTION CONTROL SAFETY MANAGER
3. CHIEF OF STAFF	8. SAFETY MANAGER
4. ASSOC. DIRECTOR	9. GENERAL ENGINEER
5. SERVICE LINE MGRS.	10. COTR

Drawing Title: CASEWORK ELEVATIONS

FULLY SPRINKLERED

Project Title: RENOVATE 13A FOR ENDOSCOPY SUITE

Date: June 10, 2011

Project Number: 557-10-108

Drawn	Building Number	AutoCAD File Name
MJF	MJF	
Checked	Reviewed	Const. Contract No.

DRAWING No. A-202

Veterans Affairs