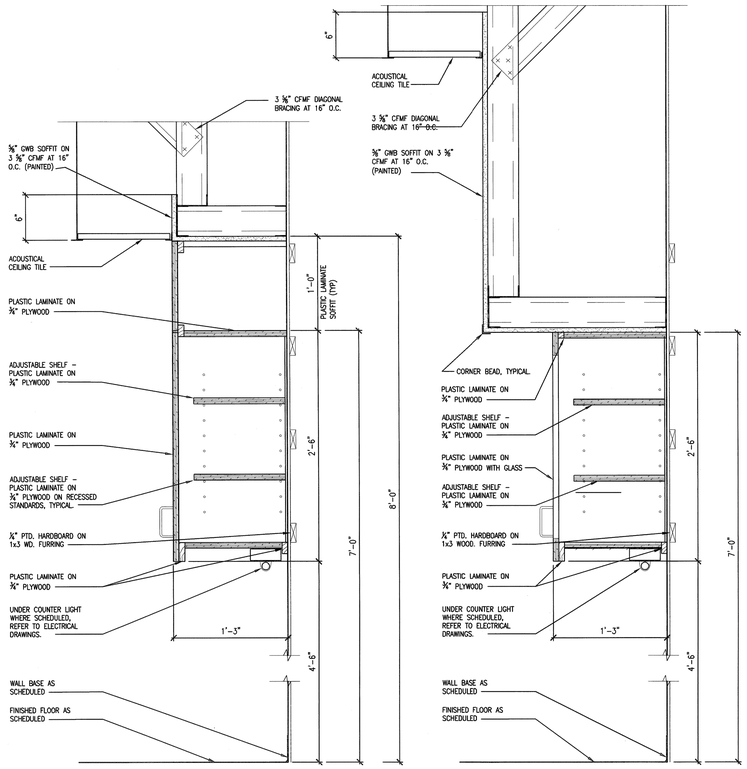

D1 TYPICAL WALL CABINET
1-1/2" = 1'-0"

D2 TYPICAL WALL CABINET AT PROCEDURE ROOM
1-1/2" = 1'-0"

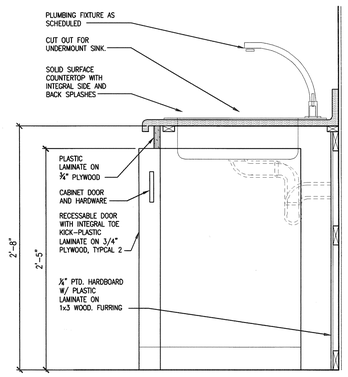

D4 ADA SINK BASE CABINET AT CLINIC SPD AND SCOPE PREP
1-1/2" = 1'-0"

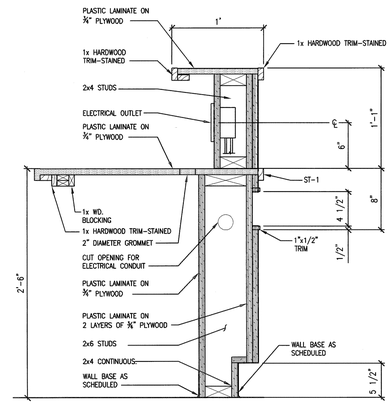

B5 TYPICAL NURSE STATION WITH HIGH WALL
1-1/2" = 1'-0"

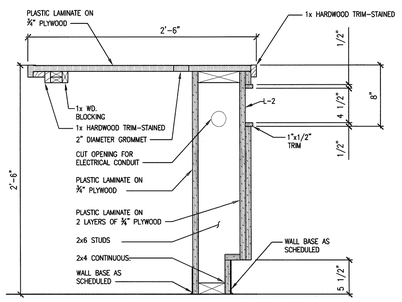

B7 TYPICAL NURSE STATION AT ADA TRANSACTION SPACE
1-1/2" = 1'-0"

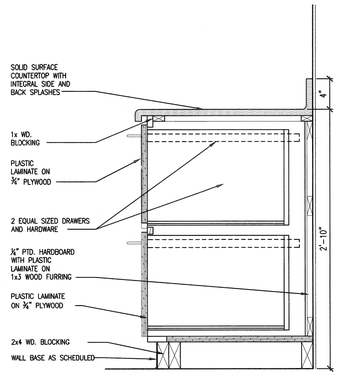

E6 FILE DRAWER BASE CABINET
1-1/2" = 1'-0"

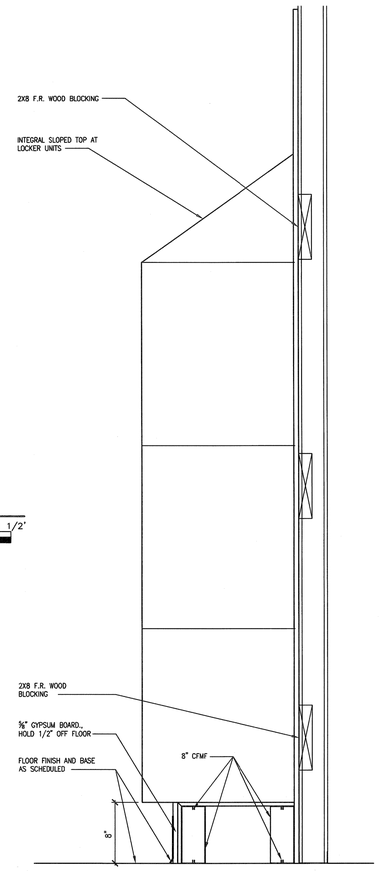

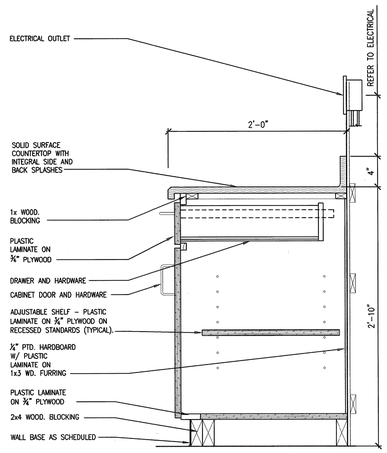

F1 TYPICAL COMBINATION BASE CABINET
1-1/2" = 1'-0"

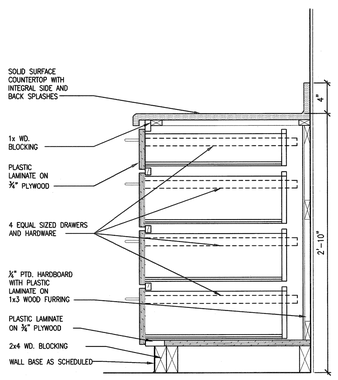

F2 TYPICAL DRAWER BASE CABINET
1-1/2" = 1'-0"

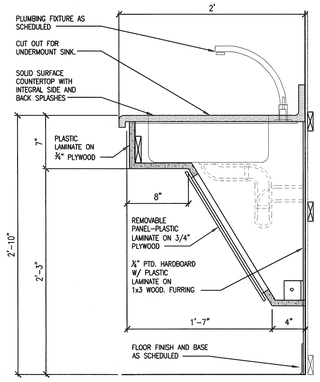

F4 TYPICAL ADA SINK BASE CABINET
1-1/2" = 1'-0"

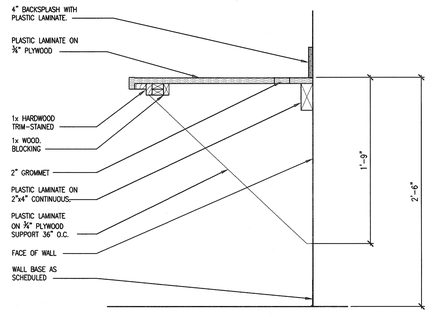

F6 TYPICAL ADA COUNTER COUNTER/WORK STATION
1-1/2" = 1'-0"

F8 TYPICAL ADA SINK TYPICAL STAFF LOCKER
1-1/2" = 1'-0"

GENERAL SHEET NOTES

A. ALL EXPOSED EXTERIOR CASEWORK SURFACES TO BE FINISHED WITH SCHEDULED PLASTIC LAMINATE.

B. ALL EXPOSED INTERIOR CASEWORK SURFACES TO BE FINISHED WITH WHITE PLASTIC LAMINATE.

100% SUBMITTAL

REVISION NO.	REVISION DESCRIPTION	By	Date

Revisions

Department of Veterans Affairs
Medical Center
1826 Veterans Blvd.
Dublin, Ga. 31021

SEAL

Architect/Engineer Address
Harrell, Saltrick & Hopper
Design & Management Solutions for the Built Environment
151 LOUDST STREET, SUITE #1
AVONDALE ESTATES, GA 30002
P 704.814.1325
F 704.321.0833
WWW.HSHPC.COM
COPYRIGHT © 2011 HARRELL SALTRICK & HOPPER, PC
HSH PROJECT # 10004

Recommended Approvals:	
1. MEDICAL DIRECTOR	6. OPERATIONS SERVICE LINE MANAGER
2. ASSOCIATE DIRECTOR	7. INFECTION CONTROL SAFETY MANAGER
3. CHIEF OF STAFF	8. SAFETY MANAGER
4. ASSOC. DIRECTOR	9. GENERAL ENGINEER
5. SERVICE LINE MGRS.	10. COTR

Drawing Title: CASEWORK SECTIONS

FULLY SPRINKLERED

Project Title: RENOVATE 13A FOR ENDOSCOPY SUITE

Date: June 10, 2011

Project Number: 557-10-108

Drawn	Building Number	AutoCAD File Name
MJF	MJF	
Checked	Reviewed	Const. Contract No.

DRAWING No. A-204

Veterans Affairs