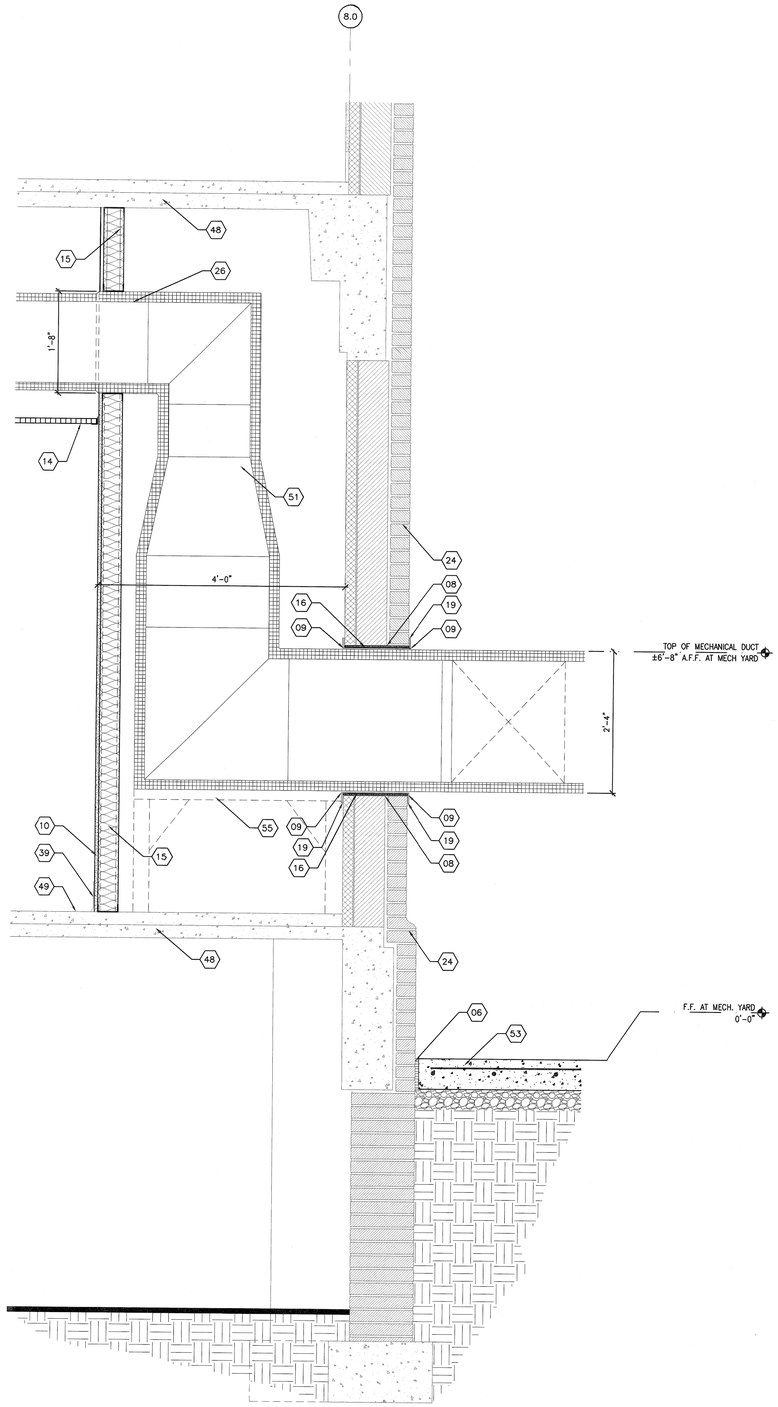

F1 TYPICAL WALL SECTION AT MECHANICAL CHASE
1" = 1'-0"

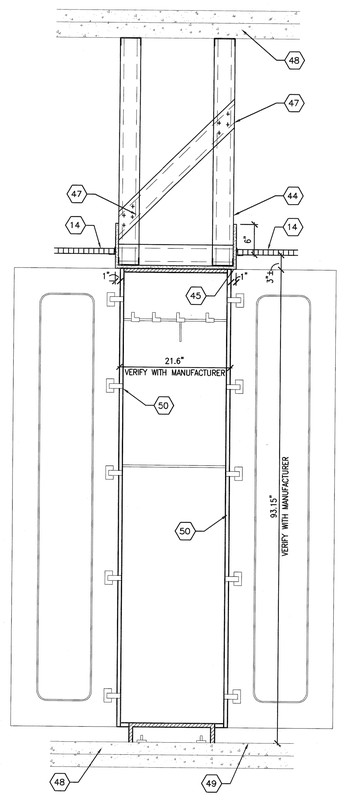

F6 TYPICAL WALL SECTION SCOPE PASS THROUGH CABINET
1" = 1'-0"

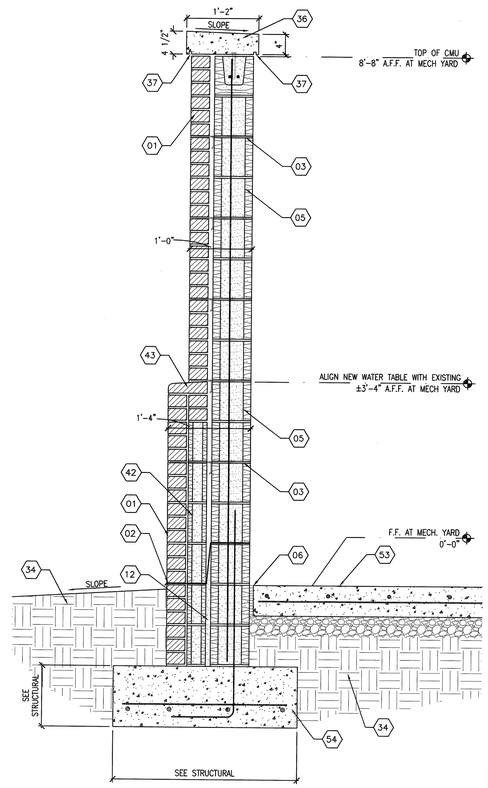

F7 TYPICAL WALL SECTION AT MECH. SCREEN WALL
1" = 1'-0"

SHEET KEYNOTES (X)

1. 4" (NOMINAL) BRICK VENEER
2. THRU WALL FLASHING, PROVIDE WEEP HOLES. (MIN. 24" O.C.)
3. HOT DIPPED GALVANIZED MASONRY TIE.
4. 2" RIGID INSULATION
5. 8" CMU- SEE STRUCTURAL DRAWINGS FOR REINFORCEMENT
6. 1/2" BOND BREAK
7. NEW EXPANSION JOINT COVER
8. 1/4" PAINTED GALVANIZED STEEL LINTEL PLATE- OVERLAP 12" EACH SIDE OF OPENING
9. POWDER COATED STEEL DUCT RING
10. PAINTED 5/8" GYPSUM BOARD
11. 4" CONCRETE SLAB ON GRADE WITH VAPOR BARRIER- SEE STRUCT. DRAWINGS
12. GROUT SOLID BELOW FINISH FLOOR
13. PAINTED GYPSUM BOARD CEILING
14. ACOUSTICAL LAY-IN TILE CEILING
15. 4" METAL STUD-SECURELY ATTACHED TO FLOOR ABOVE
16. STUFF MINERAL WOOL BETWEEN DUCT RING AND DUCT
17. 1 1/2" METAL DECK-SEE STRUCTURAL DRAWINGS
18. 2" RIGID INSULATION
19. CONT. SEALANT AROUND PERIMETER OF DUCT RING
20. PRE-FINISHED GUTTER
21. PRE-FINISHED FLASHING TO MATCH ROOF AND GUTTERS
22. BENT PLATE-SEE STRUCTURAL DRAWINGS
23. ALUMINUM CANOPY
24. EXISTING BRICK TO REMAIN
25. PRE-FINISHED FLASHING
26. SECULARLY STRAP DUCT TO STRUCTURE ABOVE- SEE MECHANICAL DRAWINGS
27. NEW STAINLESS STEEL HANDRAIL
28. EXTENDED LEG ON JOIST- SEE STRUCTURAL DRAWINGS
29. STRUCTURAL STEEL-SEE STRUCTURAL DRAWINGS
30. 4" 16g. METAL STUDS AT 16" O.C. SECURELY ATTACHED TO CMU.
31. PRE-FINISHED METAL FASCIA
32. 2" AIR SPACE
33. 1 1/2" STAINLESS STEEL PIPE FOR HANDRAIL ATTACHMENT
34. COMPACTED GROUND
35. ALUMINUM CANOPY POST
36. PRECAST CONCRETE COPING
37. 1/4" DRIP EDGE
38. FILTER FABRIC
39. SCHEDULED BASE
40. SCHEDULED DOOR
41. 5/8" EXTERIOR GRADE PAINTED GYPSUM BOARD WITH 2" CONT. SCREEN VENT AROUND PERIMETER
42. 4" CMU.
43. WATER TABLE BRICK TO MATCH EXISTING.
44. 4" CFMF AT 16" O.C.
45. 5/8" PAINTED GYPSUM BOARD.
46. SEALANT, TYP.
47. 4" CFMF DIAGONAL BRACING.
48. EXISTING CONCRETE STRUCTURE.
49. FLOOR AND BASE AS SCHEDULED.
50. MEDICAL SCOPE PASS THROUGH CABINET, REFER TO EQUIPMENT PLANS FOR ADDITIONAL INFORMATION.
51. MECHANICAL DUCT, SEE MECHANICAL DRAWINGS.
52. 1/4" X 36" STEEL PLATE – SEE STRUCTURAL DRAWINGS
53. 6" CONCRETE SLAB- SEE STRUCTURAL DRAWINGS
54. CONCRETE FOOTING- SEE STRUCTURAL DRAWINGS
55. MECHANICAL FLOOR DUCT SUPPORTS- SEE MECHANICAL DRAWINGS

100% SUBMITTAL

REVISION NO.	REVISION DESCRIPTION	By	Date

Revisions

Department of Veterans Affairs
Medical Center
1826 Veterans Blvd.
Dublin, Ga. 31021

SEAL

Architect/Engineer Address
Harrell, Saltrick & Hopper
Design & Management Solutions for the Built Environment
151 LOCUST STREET, SUITE #1
AVONDALE ESTATES, GA 30002
P 704.814.1325
F 704.321.0833
WWW.HSHPC.COM
COPYRIGHT © 2011 HARRELL SALTRICK & HOPPER, PC
HSH PROJECT # 10004

Recommended Approvals:	
1. MEDICAL DIRECTOR	6. OPERATIONS SERVICE LINE MANAGER
2. ASSOCIATE DIRECTOR	7. INFECTION CONTROL SAFETY MANAGER
3. CHIEF OF STAFF	8. SAFETY MANAGER
4. ASSOC. DIRECTOR	9. GENERAL ENGINEER
5. SERVICE LINE MGRS.	10. COTR

Drawing Title: WALL SECTIONS

FULLY SPRINKLERED

Project Title: RENOVATE 13A FOR ENDOSCOPY SUITE

Date: June 10, 2011

Project Number: 557-10-108

Drawn	Building Number	AutoCAD File Name
MJF		
Checked	Reviewed	Const. Contract No.

DRAWING No. A-306

Veterans Affairs