NOTE:
ALL PRIMARY FONTS SHALL BE HELVETICA MEDIUM IN UPPER AND LOWER CASE. ALL SECONDARY FONTS SHALL BE HELVETICA REGULAR IN UPPER AND LOWER CASE. ALL OVERHEAD SIGNS SHALL BE HELVETICA CONDENSED MEDIUM. NORMAL LETTER SPACING SHALL BE USED AND ALL WORD SPACING SHALL BE EQUAL TO A LOWER CASE "v". ALIGNMENT, INTERLINE SPACING AND PARAGRAPH SPACING IS INDICATED ON TYPICAL SIGNAGE ELEVATIONS. SIGN BACKGROUND COLOR SHALL MATCH EXISTING SIGNAGE BACKGROUND COLOR, TEXT COLOR SHALL MATCH EXISTING SIGNAGE TEXT COLOR, UNLESS INDICATED OTHERWISE. COORDINATE NEW SIGN LOCATIONS WITH EXISTING SIGNS AND EQUIPMENT.

SIGNAGE SCHEDULE

ID	SIGNAGE TYPE	SIGN TEXT/LAYOUT	SIDE	QUANTITY	SYMBOL	NOTES
001	IN-03.01	ELECTRICAL	N/A	1	N/A	
002	IN-03.01	STAFF LOCKERS	N/A	1	N/A	
003	IN-03.01	EXAM	N/A	1	N/A	
004	IN-03.01	MINOR PROCEDURE	N/A	1	N/A	
005	IN-03.01	I.T. CLOSET	N/A	1	N/A	
006	IN-03.01	CLINIC SPD	N/A	1	N/A	
007	IN-03.01	ISOLATION ANTE ROOM	N/A	1	N/A	
008	IN-03.01	ISOLATION EXAM	N/A	1	N/A	
009	IN-03.01	EXAM	N/A	1	N/A	
010	IN-03.01	EXAM	N/A	1	N/A	
011	IN-03.01	EXAM	N/A	1	N/A	
012	IN-03.01	EXAM	N/A	1	N/A	
013	IN-03.01	EXAM	N/A	1	N/A	
014	IN-03.01	EXAM	N/A	1	N/A	
015	IN-03.01	RECEPTION	N/A	1	N/A	
016	IN-03.01	CONSULTATION	N/A	1	N/A	
017	IN-03.01	MENS TOILET	N/A	1	N/A	
018	IN-03.01	WOMENS TOILET	N/A	1	N/A	
019	IN-03.01	PROCEDURE SUITE	N/A	1	N/A	
020	IN-03.01	MEDS ROOM	N/A	1	N/A	
021	IN-03.01	ELECTRICAL	N/A	1	N/A	
022	IN-03.01	PROCEDURE 1	N/A	1	N/A	
023	IN-03.01	STORAGE	N/A	1	N/A	
024	IN-03.01	PATIENT TOILET	N/A	1	N/A	
025	IN-03.01	SOILED UTILITY	N/A	1	N/A	
026	IN-03.01	CLEAN LINEN	N/A	1	N/A	
027	IN-03.01	PREP/HOLD	N/A	1	N/A	
028	IN-03.01	STAFF TOILET	N/A	1	N/A	
029	IN-03.01	VESTIBULE	N/A	1	N/A	
030	IN-03.01	SCOPE WASH	N/A	1	N/A	
031	IN-03.01	CLEAN UTILITY	N/A	1	N/A	
032	IN-03.01	CLEAN SCOPE	N/A	1	N/A	
033	IN-03.01	STAFF TOILET	N/A	1	N/A	
034	IN-03.01	NOURISHMENT	N/A	1	N/A	
035	IN-03.01	PROCEDURE 2	N/A	1	N/A	
036	IN-03.01	CRASH CART	N/A	1	N/A	
037	IN-03.01	PROCEDURE 3	N/A	1	N/A	
038	IN-03.01	I.T. CLOSET	N/A	1	N/A	
039	IN-03.01	STAIR/EXIT	N/A	1	N/A	
040	IN-03.01	SCOPE ANTE ROOM	N/A	1	N/A	
041	IN-03.01	SCOPE PREP	N/A	1	N/A	
042	IN-03.01	WHEELCHAIR STORAGE	N/A	1	N/A	
043	EN-15.02	ENDOSCOPY SUITE PICK-UP DROP-OFF	N/A	1		
043	IN-14.01	ENDOSCOPY CLINIC PATIENT CHECK-IN BATHROOMS FAMILY WAITING	N/A	1	↑	
044	IN-03.01	PREP/HOLD ANTE ROOM	N/A	1	N/A	
045	IN-03.01	ISOLATION PREP/HOLD	N/A	1	N/A	
046	IN-03.01	CLINIC ENTRANCE	N/A	1	N/A	
047	IN-03.01	PROCEDURE AREA	N/A	1	N/A	
048	IN-03.01	PREP/RECOVERY	N/A	1	N/A	
049	IN-03.01	MECH.	N/A	1	N/A	

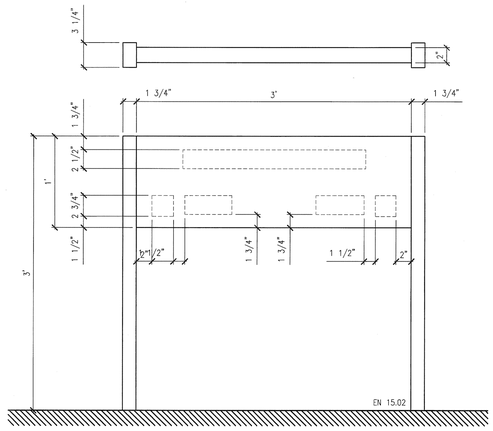

TYPICAL BUILDING SIGN ELEVATION
D4 EN 15.02
1 1/2" = 1'-0"

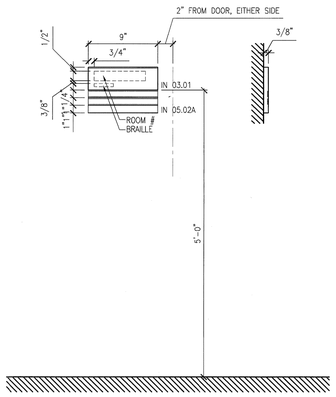

TYPICAL ROOM IDENTIFICATION SIGN
D6 IN 03.01 & 05.02A
1 1/2" = 1'-0"

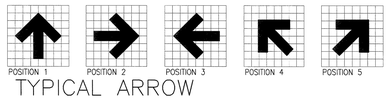

TYPICAL ARROW CONFIGURATIONS FOR SIGNAGE
E7 N.T.S.

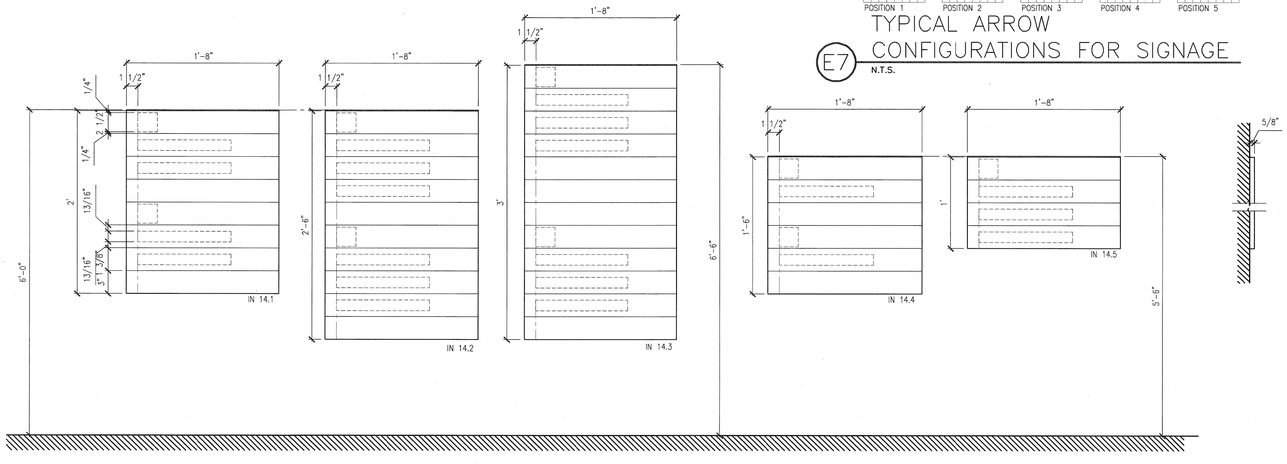

TYPICAL WALL DIRECTIONAL SIGN ELEVATIONS
F4 IN 14.01-.5
1 1/2" = 1'-0"

GENERAL SHEET NOTES

A. EACH EXISTING DOOR TO REMAIN, RELOCATED DOORS AND NEW DOORS FOR EACH ROOM TO RECEIVE A TYPICAL ROOM IDENTIFICATION SIGN, SEE SIGNAGE PLAN FOR LOCATIONS.

B. CONTRACTOR TO VERIFY AND COORDINATE SIGNAGE WORDING WITH OWNER PROVIDED FINAL ROOM NAMES AND NUMBERS.

100% SUBMITTAL

REVISION NO.	REVISION DESCRIPTION	By	Date

Revisions

Department of Veterans Affairs
Medical Center
1826 Veterans Blvd.
Dublin, Ga. 31021

DANIEL C. SALTRICK REGISTERED ARCHITECT 8867 NORTH CAROLINA CHARLOTTE, N.C. 6.10.11
SEAL

Architect/Engineer Address
Harrell, Saltrick & Hopper
Design & Management Solutions for the Built Environment
151 LOUDST STREET, SUITE #
AVONDALE ESTATES, GA 30002
P 704.814.1325
F 704.321.0833
WWW.HSHPC.COM
COPYRIGHT © 2011 HARRELL SALTRICK & HOPPER, PC
HSH PROJECT # 10004

Recommended Approvals:	
1. MEDICAL DIRECTOR	6. OPERATIONS SERVICE LINE MANAGER
2. ASSOCIATE DIRECTOR	7. INFECTION CONTROL SAFETY MANAGER
3. CHIEF OF STAFF	8. SAFETY MANAGER
4. ASSOC. DIRECTOR	9. GENERAL ENGINEER
5. SERVICE LINE MGRS.	10. COTR

Drawing Title: SIGNAGE SCHEDULE AND DETAILS

Project Title: RENOVATE 13A FOR ENDOSCOPY SUITE

Date: June 10, 2011

Project Number: 557-10-108

FULLY SPRINKLERED

Drawn: MJF

Building Number

AutoCAD File Name

Checked

Reviewed

Const. Contract No.

DRAWING No. A-603

Veterans Affairs