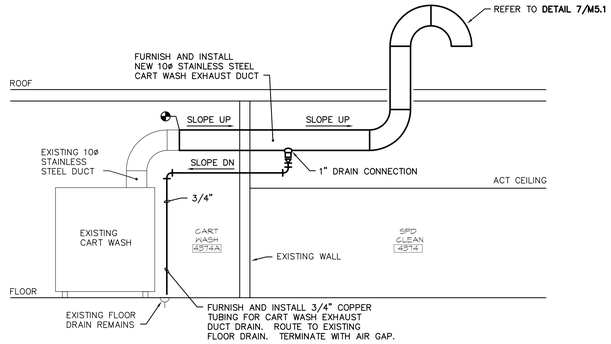

CART AND UTENSIL CONNECTION DIAGRAM 8

NO SCALE

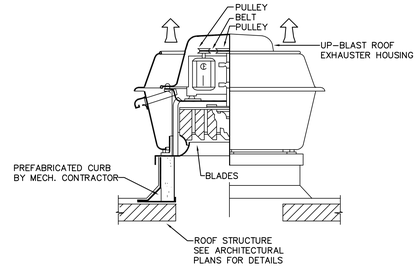

UP-BLAST ROOF EXHAUSTER DETAIL 4

NO SCALE

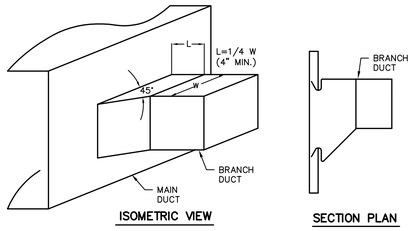

45° BRANCH DUCT TAKEOFF DETAIL 1

NO SCALE

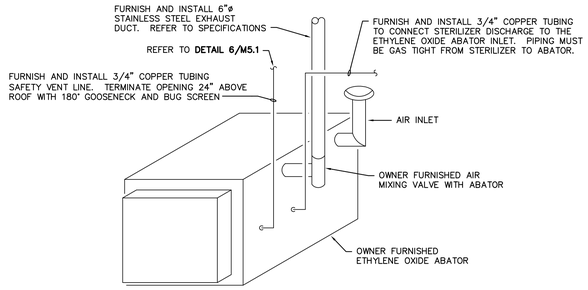

NOTE:
REFER TO MANUFACTURER'S INSTALLATION MANUAL FOR ADDITIONAL INSTALLATION REQUIREMENTS

ETHYLENE OXIDE ABATOR DETAIL 5

NO SCALE

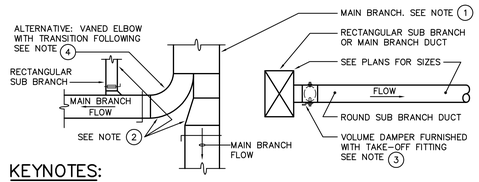

KEYNOTES:

1. DUCT SPLITS TO DIVIDE FLOW SHALL BE PROPORTIONATE TO SUM TOTAL OF BRANCH DUCT CFM SHOWN ON FLOOR PLANS.
2. ELBOW RADIUS, TAKE-OFF ANGLE AND TRANSITION ANGLE SHALL BE PER SMACNA RECOMMENDATIONS.
3. ROUND DUCT TAKE-OFFS FROM RECTANGULAR DUCTS SHALL BE MADE WITH A HIGH EFFICIENCY FLANGED AND GASKETED FITTING. THE MOUNTING GROOVE SHALL BE SO CONSTRUCTED AS TO ENSURE CONSTANT FIT CONTROL. BALANCING DAMPERS SHALL BE FACTORY INSTALLED WITH SPRING LOADED RETRACTABLE BEARINGS AND A POSITIVE LOCKING WING NUT FOR EASY READJUSTMENT WHEN NEEDED. FITTING SHALL BE FULLY GASKETED ON ALL FLANGES AND CORNERS FOR HIGH EFFICIENCY TAKE-OFF FITTINGS. PROVIDE SHOP DRAWINGS FOR ACCEPTANCE OF PRODUCT.
4. ALL ELBOWS SHALL BE RADIUS TYPE, EXCEPT WHERE SPACE RESTRICTIONS NECESSITATE USING 90° MITERED VANED ELBOWS.
5. VOLUME DAMPERS SHALL BE PROVIDED ON ALL LOW PRESSURE SUPPLY DUCT BRANCHES AND ON ALL RETURN AND EXHAUST DUCT BRANCHES.

TYPICAL LOW PRESSURE DUCT DETAIL 2

NO SCALE

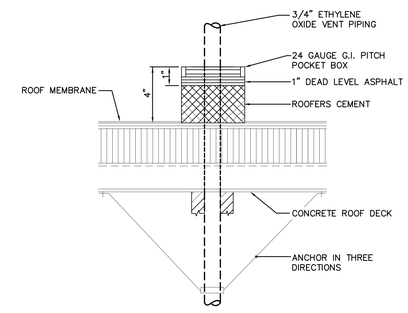

PITCH POCKET DETAIL 6

NO SCALE

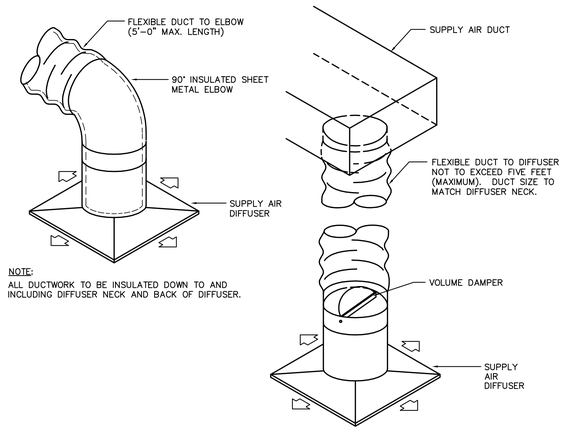

NOTE:
ALL DUCTWORK TO BE INSULATED DOWN TO AND INCLUDING DIFFUSER NECK AND BACK OF DIFFUSER.

DIFFUSER CONNECTION DETAIL 3

NO SCALE

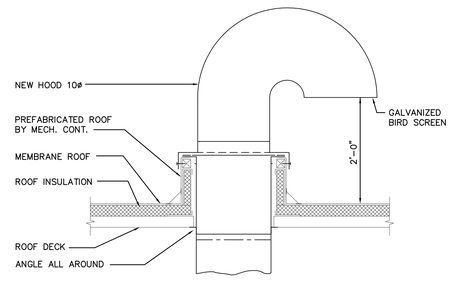

CART WASH EXHAUST HOOD DETAIL 7

NO SCALE

Revisions	Date

© 2000 Calvin L. Hinz Architects P.C.

These plans are specifically designed for construction by Calvin L. Hinz Architects and are intended for no other purposes. Permission for use of this document in part or whole without written consent of Calvin L. Hinz Architects is prohibited.

IMPORTANT CONTRACTOR'S NOTE

1. ALL CONTRACTORS ARE RESPONSIBLE FOR REVIEWING ENTIRE SET OF DOCUMENTS TO DETERMINE THEIR FULL SCOPE OF WORK. CONTRACTOR SHALL NOT BE ALLOWED EXTRA COSTS DUE TO FAILURE TO REVIEW ENTIRE SET OF DOCUMENTS.
2. ANY USE OF THESE ELECTRONIC DRAWINGS OR SCALING OF THE PRINTED DOCUMENTS ARE DONE SO AT THE CONTRACTORS RISK.

PROFESSIONAL MECHANICAL ENGINEER PHILIP M. SCHREIER E-4552 STATE OF NEBRASKA

ARCHITECT/ENGINEERS:

CLH Calvin L. Hinz ARCHITECTS, P.C.
Calvin L. Hinz Architects, P.C.
3705 North 200th Street
Elkhorn, Nebraska 68022
Phone:402.291.6941 Fax: 402.291.9193

FARRIS ENGINEERING
OMAHA | LINCOLN | DES MOINES | COLORADO SPRINGS
farris-uso.com

COPYRIGHT
This document and the information contained may not be reproduced or excerpted from without the express written permission of Farris Engineering, Inc. Unauthorized copying, disclosure or construction use are prohibited by the copyright law.

11239 Chicago Circle
Omaha, Nebraska 68154
402.330.5900 402.330.5902

Drawing Title: MECHANICAL DETAILS

Project Title: CORRECT NWIHCS SPD DEFICIENCIES- VA OMAHA DIVISION

Project Number: 636-12-105B
OMAHA PACKAGE ONE

Building Number: ONE

Location: VAMC Omaha, NE

Drawing Number: M5.1

Approved Project Director: GARY STUCKENSCHMIDT

CONSTRUCTION DOCUMENT (CD-3) SUBMITTAL 100%
APRIL 13, 2012

Date	Checked	Drawn
APRIL 13, 2012	BMS	LMB

Dwg. 13 of 16

Office of Construction and Facilities Management

Department of Veterans Affairs

VA FORM 08-6231

G:\2012\12201\CAD\Mechanical\Package 1\12201-M5.1.dwg 4-13-12 09:26:35 AM lmb