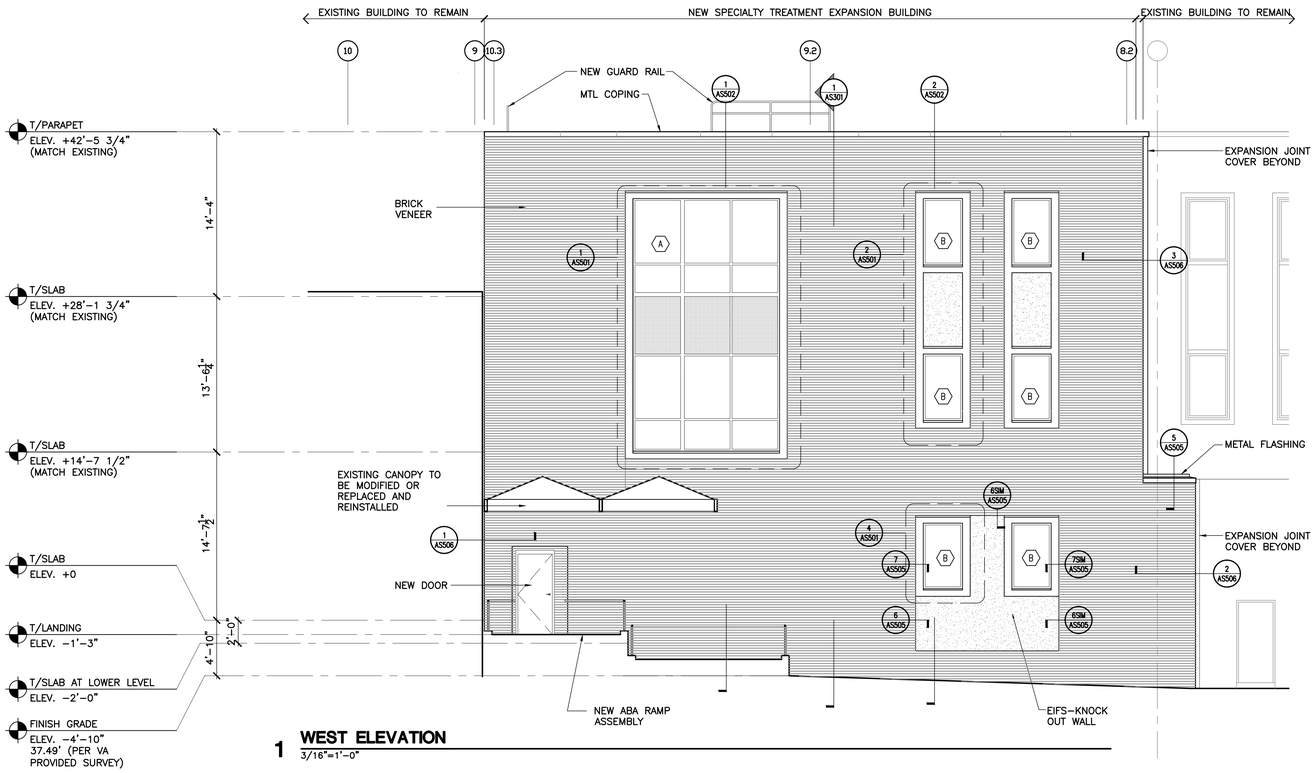


**1 WEST ELEVATION**
3/16"=1'-0"

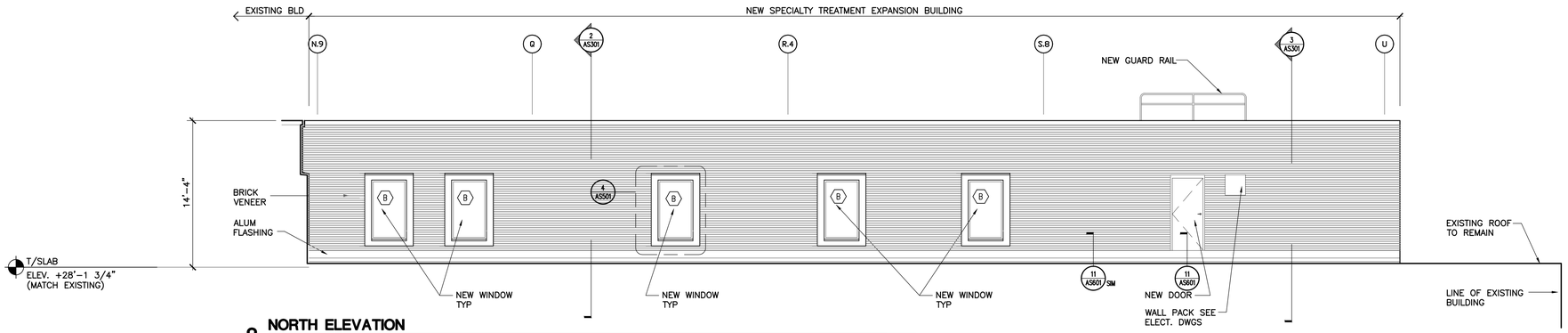


**2 NORTH ELEVATION**
3/16"=1'-0"

REFER TO AS701 FOR ELEVATIONS RELATED TO DED. ALT #4

## 04-18-12 MEDICAL EQUIPMENT AND INTERIOR DESIGN REVISIONS

| REVISION | DATE |
|---|---|
| 65% SUBMITTAL | 02/19/11 |
| 95% SUBMITTAL | 03/29/11 |
| 100% SUBMITTAL | 04/13/11 |
| CONSTRUCTION SET | 05/02/11 |
| 1 Clarifications to Bid Options- ADDENDUM #4 | 11/09/11 |
| MEDICAL EQUIPMENT AND INTERIOR DESIGN REVISIONS | 04/18/12 |

CONSULTANTS:

ARCHITECT/ENGINEERS:

ttv architects, inc.
110 EAST BIBB STREET
JACKSONVILLE, FLORIDA 32202
T 904.798.8333
F 904.798.8335
www.ttvarch.com
FL Lic#AA0002609

Drawing Title: ELEVATIONS

Approved: Project Director

Project Title: SPECIALTY TREATMENT EXPANSION PROJECT- BUILDING #1

Location: JAMES A. HALEY VETERANS' HOSPITAL

Date: 02/19/11 | Checked: TTV | Drawn: TAG

Project Number: 673-CSI-100

Building Number: 1

Drawing Number: AS201

Dwg. 16 of 40

Office of Construction and Facilities Management

Department of Veterans Affairs

VA FORM 08-6231

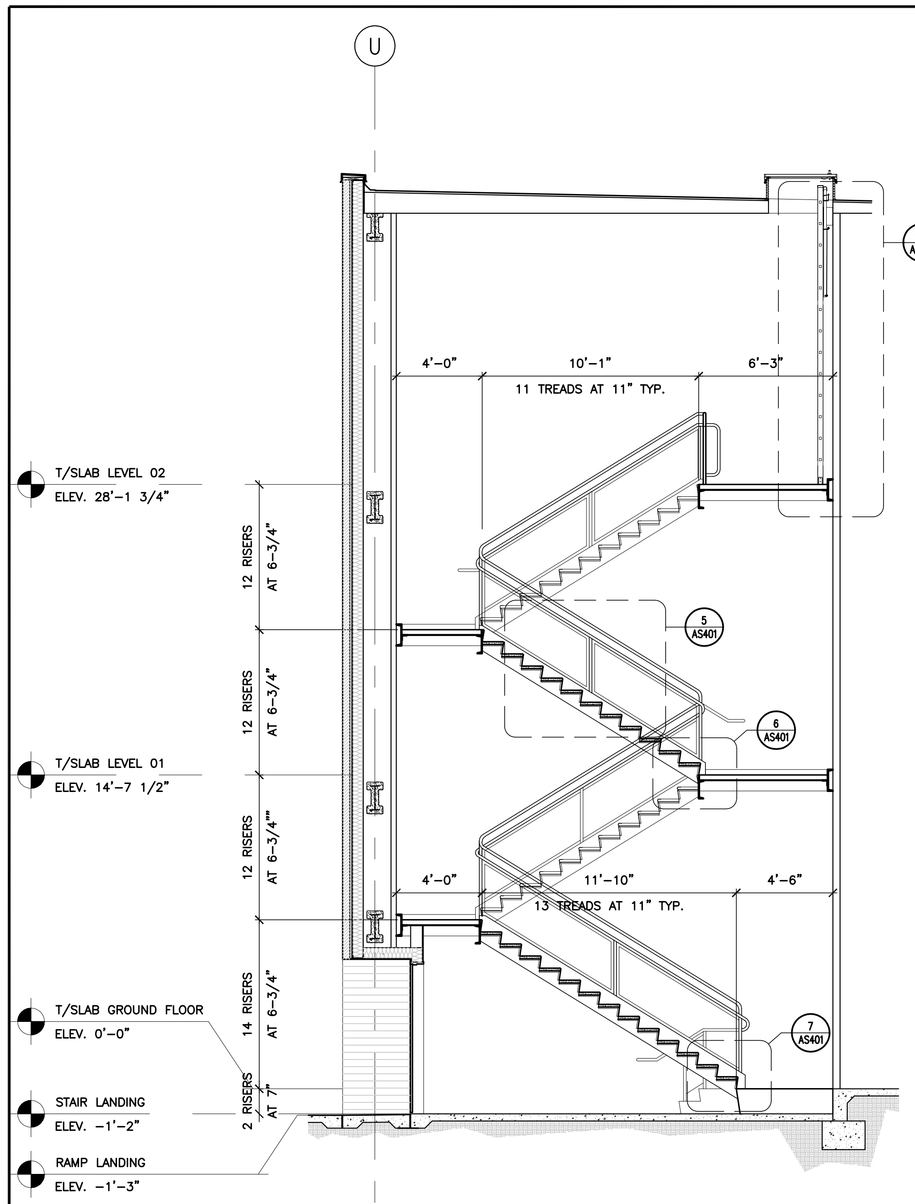


1 STAIR SECTION-2 HR FIRE RATED ENCLOSURE
1/4"=1'-0"

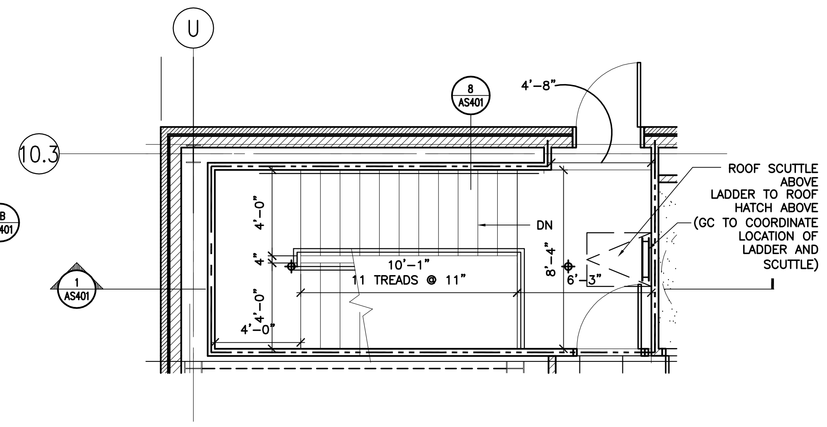


2 STAIR S2-2-23 2ND FLOOR PLAN
1/4"=1'-0"

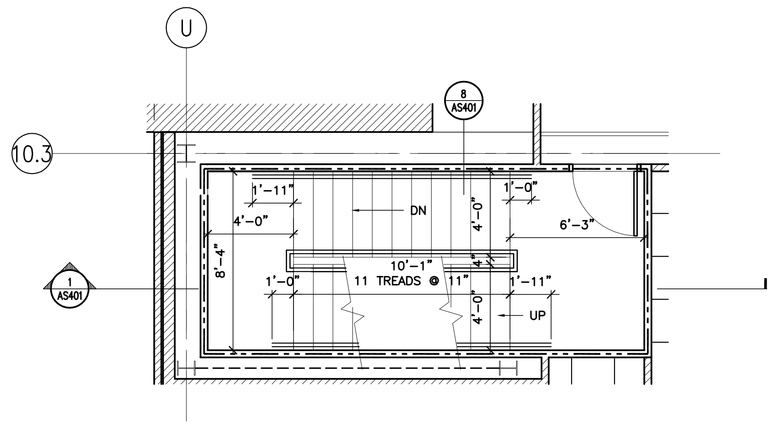


3 STAIR S1-2-23 1ST FLOOR PLAN
1/4"=1'-0"

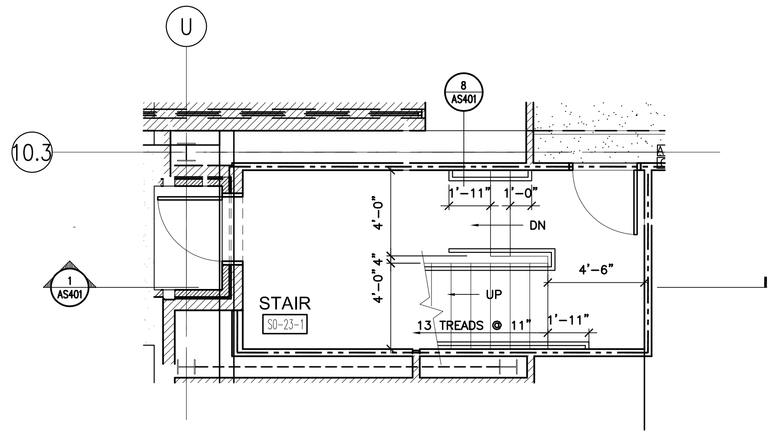


4 STAIR S2-2-23 GROUND FLOOR PLAN
1/4"=1'-0"

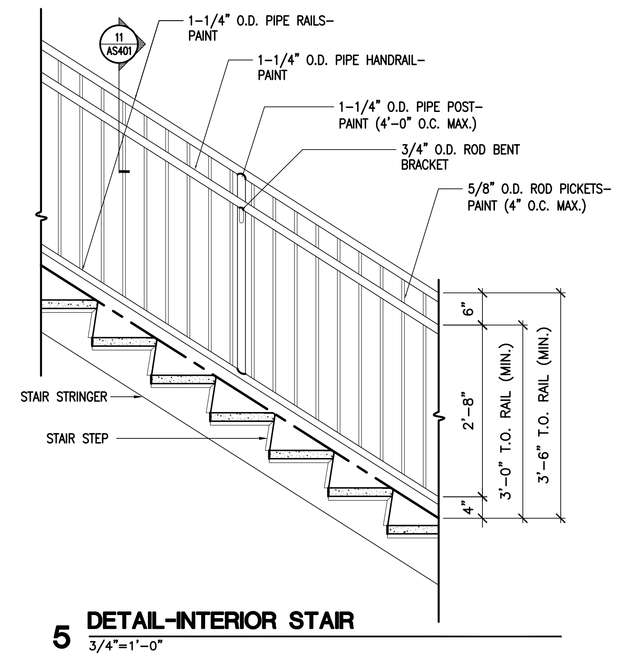


5 DETAIL-INTERIOR STAIR
3/4"=1'-0"

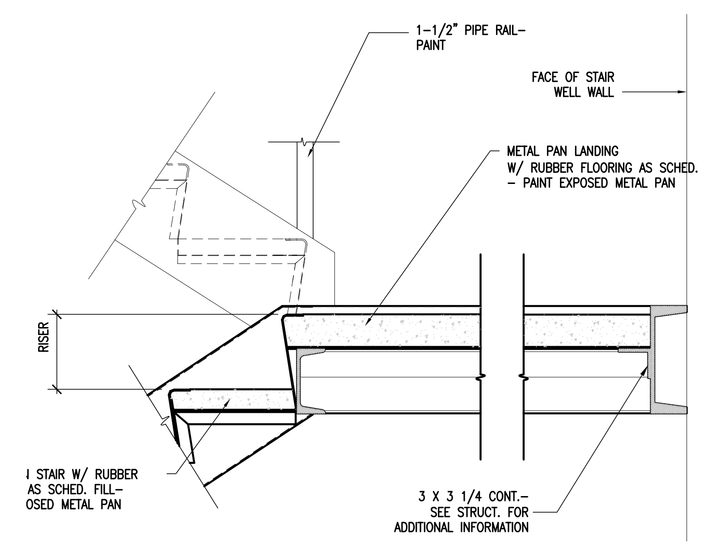


6 DETAIL-INTERIOR STAIR
1-1/2"=1'-0"

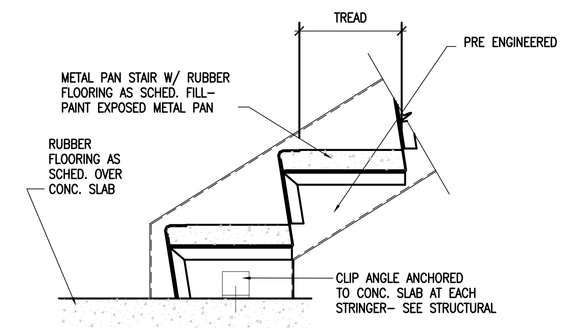


7 DETAIL-INTERIOR STAIR
1-1/2"=1'-0"

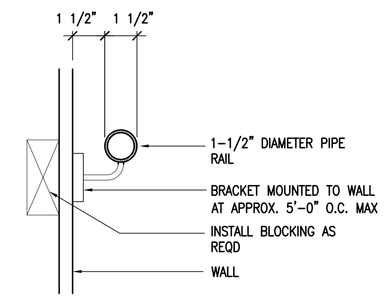


8 DETAIL-RAIL BRACKET
3"=1'-0"

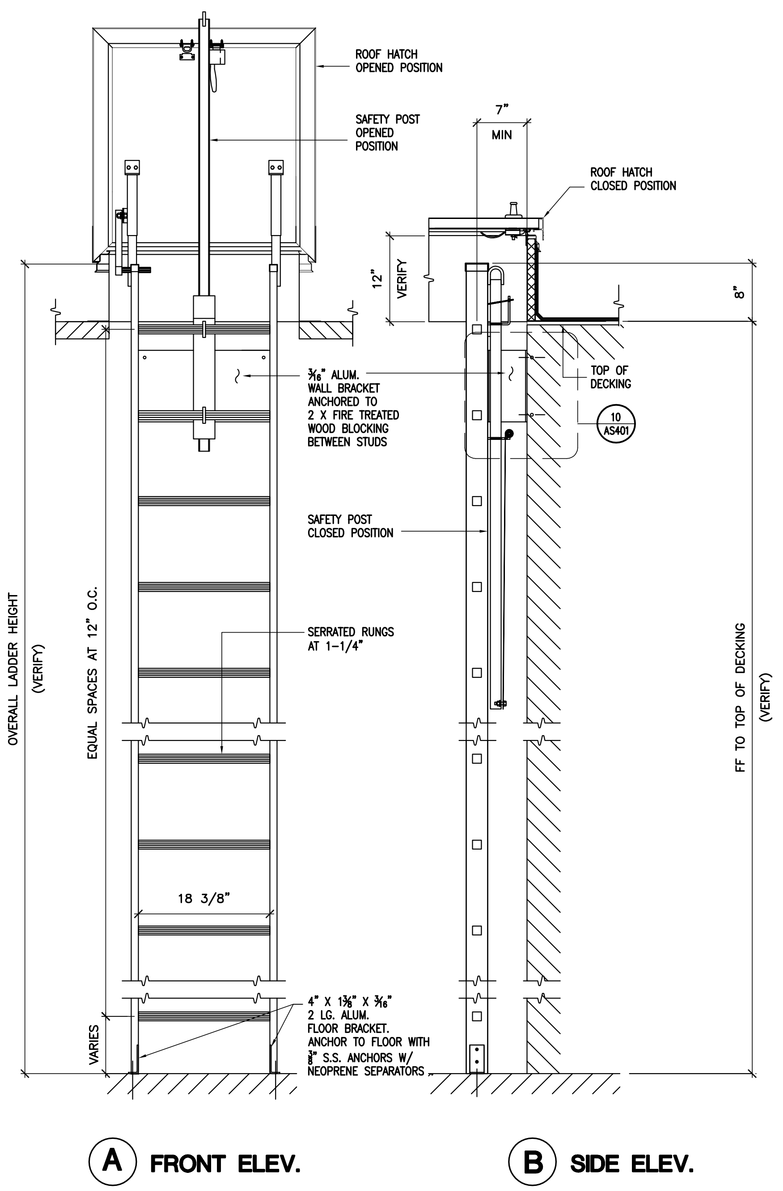


9 DETAIL-LADDER
3/4"=1'-0"

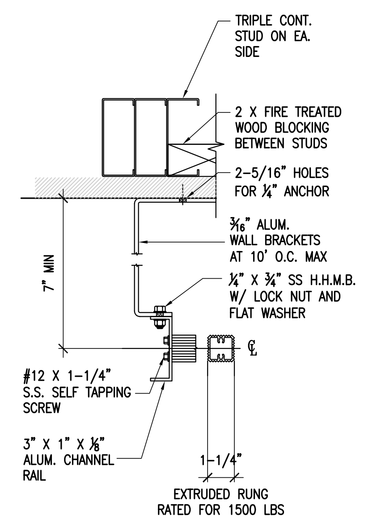


10 DETAIL-LADDER ANCHOR PLATE
3"=1'-0"

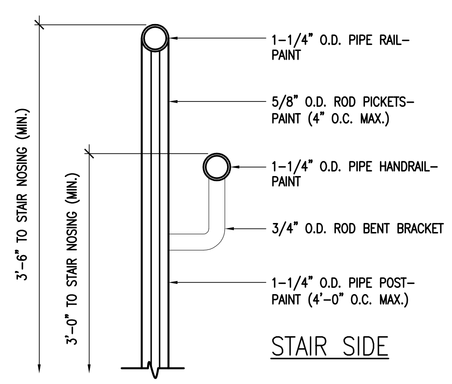


11 HANDRAIL/GUARDRAIL DETAIL
3"=1'-0"

## GENERAL NOTES

1. RAILING SHALL MEET ABA
2. RAILING SHALL BE 1-1/2" DIA PIPE STEEL RAIL-TYP.
3. PROVIDE 1-1/2" DIA PIPE RAIL AT WALL WITH RAIL EXTENSIONS AS SHOWN.
4. ALL RAILS SHALL BE STABLE, CAPABLE OF RESISTING 350LBS LEANING OVER IT. INSTALL BLOCKING AS REQD.
5. PAINT ALL RAILS, STRINGERS, AND METAL PANS
6. COORDINATE WITH STRUCTURAL FOR STAIR HANGERS.

# 04-18-12 MEDICAL EQUIPMENT AND INTERIOR DESIGN REVISIONS

| REVISION | DATE |
|---|---|
| 65% SUBMITTAL | 02/19/11 |
| 95% SUBMITTAL | 03/29/11 |
| 100% SUBMITTAL | 04/13/11 |
| CORRECTIONS PER VA COMMENTS | 06/02/11 |
| 1 Clarifications to Bid Options- ADDENDUM #4 | 11/09/11 |
| MEDICAL EQUIPMENT AND INTERIOR DESIGN REVISIONS | 04/18/12 |

CONSULTANTS:

ARCHITECT/ENGINEERS:

ttv architects, inc.
110 EAST FORSYTH ST
JACKSONVILLE, FLORIDA 32202
T 904.798.8333
F 904.798.8335
www.ttvarch.com
FL LC#AA0002609

Drawing Title: STAIR PLANS AND DETAILS

Approved Project Director

Project Title: SPECIALTY TREATMENT EXPANSION PROJECT- BUILDING #1

Location: JAMES A. HALEY VETERANS' HOSPITAL

Date: 02/19/11 | Checked: TTV | Drawn: TAG

Project Number: 673-CSI-100

Building Number: 1

Drawing Number: AS401

Dwg. 18 of 40

Office of Construction and Facilities Management

Department of Veterans Affairs

VA FORM 08-6231

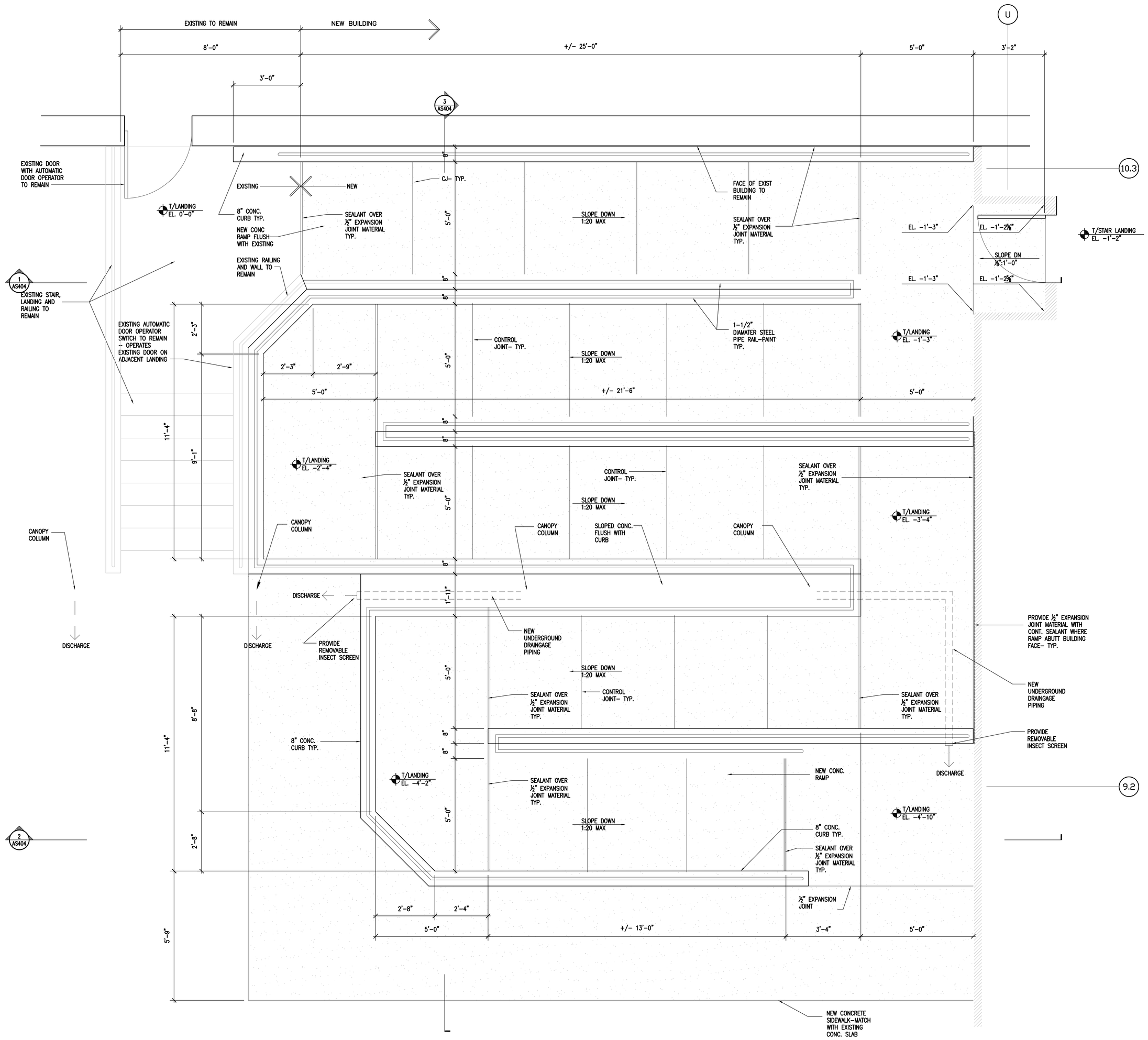


**1 ENLARGED PLAN - ACCESSIBLE RAMP**
1/2"=1'-0"

## GENERAL NOTES

A. CONCRETE

1. CONCRETE RAMP SHALL BE 4" THICK W/6 X 6 X W1.4 X W1.4 WWM
2. CONCRETE SHALL BE FLOAT FINISH, EXPECT ALL WALK SURFACES SHALL HAVE LIGHT BROOM FINISH (PERPENDICULAR TO DIRECTION OF TRAVEL).
3. TYPICAL CONCRETE WALL SHALL HAVE #5 REBAR HORIZONTAL CONTINUOUSLY AT TOP AND BOTTOM, AND 1 #5 REBAR VERTICALLY AT 4'-0" O.C. MAX.
4. PROVIDE ⅛" SAW CUT CONTROL IN CONCRETE, APPROXIMATELY 5'-0" APART-TYP.
5. WHERE SLAB ABUTTS EXISTING SLAB/WALL, PROVIDE ½" EXPANSION JOINT MATERIAL AND CONT. SEALANT AT TOP OF JOINT.
6. COORDINATE LOCATIONS OF CANOPY COLUMNS WITH RAMP LAYOUT.
7. ALL EXPOSED EDGES OF CONCRETE SHALL HAVE ¾"CHAMFER- TYP.

B. RAILING

1. RAILING SHALL BE 1-1/2" DIA. STEEL PIPE RAIL, TYP.
2. RAILING SHALL BE SET RAIL FIRM IN SLEEVE. EMBED SLEEVE A MIN. OF 4" INTO THE CONC.
3. RAILING SHALL BE ABLE TO RESIST 350LBS OF LEANING FORCE - TYP.
4. ALL RAILING MEMBER SHALL BE WELDED AND GORUND SMOOTH- TYP. PRIME AND PAINT TO MATCH CANOPY FINISH COLOR.

C. CANOPY

1. CONTRACTOR HAS THE OPTION OF MODIFYING THE EXISTING CANOPY TO REPLACING THE CANOPY IN KIND TO FIT THE NEW CONFIGURATION.
2. THE MODIFIED/NEW CANOPY SHALL BE A SELF-SUPPORTING PREENGINEERED ALUMINUM CANOPY. CANOPY HAS MEET THE REQUIREMENT OF THE FLORIDA BUILDING CODE 2010 AND RESIST 140 MPH WIND SPEED.
3. GC TO PROVIDE ALL COMPONENTS AND ACCESSORIES AS REQ'D FOR COMPLETE INSTALLATION.
4. GC TO SUBMIT ENGINEERED SHOP DRAWING (SIGNED AND SEALED BY A FLORIDA LICENSED PROFESSIONAL ENGINEER) FOR A/E REVIEW AND APPROVAL.
5. PROVIDE UNDER GROUND PIPING CONNECTING COLUMN DRAINAGE TO DISCHARGE AS SHOWN. CANOPY MANUFACTURER TO DETERMINE PIPE TYPE AND SIZE.
6. FINISH OF ALL EXPOSED MEMBERS SHALL BE DARK BRONZE FINISH (KYNAR 500) OR APPROVED EQUAL.
7. FOR INFORMATION ONLY:
   THE EXISTING CANOPY WAS PROVIDED BY:
   THE AWNING FACTORY
   1203 W. ROBENSON ST ORLANDO, FL. 32805
   PHONE 407 898 6001 FAX 407 852 1313
   VA HAS NO OBJECTION TO THE GC USING ANOTHER MANUFACTURER PROVIDED THE CANOPY HAS A SIMILAR APPEARANCE TO THE EXISTING CANOPY.

# 04-18-12 MEDICAL EQUIPMENT AND INTERIOR DESIGN REVISIONS

| REVISION | DATE |
|---|---|
| 65% SUBMITTAL | 02/19/11 |
| 95% SUBMITTAL | 03/29/11 |
| 100% SUBMITTAL | 04/13/11 |
| CONSTRUCTION SET | 05/02/11 |
| 1 Clarifications to Bid Options- ADDENDUM #4 | 11/09/11 |
| MEDICAL EQUIPMENT AND INTERIOR DESIGN REVISIONS | 04/18/12 |

CONSULTANTS:

ARCHITECT/ENGINEERS:

ttv architects, inc.
110 EAST FORSYTH ST
JACKSONVILLE, FLORIDA 32202
T 904.798.8333
F 904.798.8335
www.ttvarch.com
FL Lic.#AA0002609

Drawing Title: ACCESSIBLE RAMP PLAN

Approved: Project Director

Project Title: SPECIALTY TREATMENT EXPANSION PROJECT- BUILDING #1

Location: JAMES A. HALEY VETERANS' HOSPITAL

Date: 02/19/11 | Checked: TTV | Drawn: TAG

Project Number: 673-CSI-100

Building Number: 1

Drawing Number: AS403

Dwg. 19 of 40

Office of Construction and Facilities Management

Department of Veterans Affairs

VA FORM 08-6231

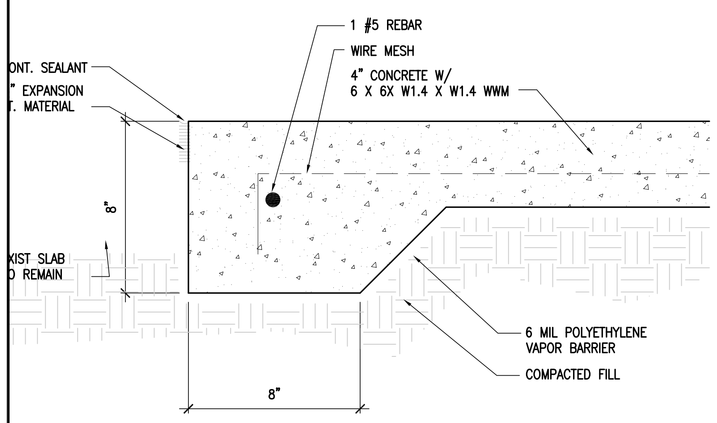


**4 DETAIL-TYP. CONCETE RAMP SLAB**
3"=1'-0"

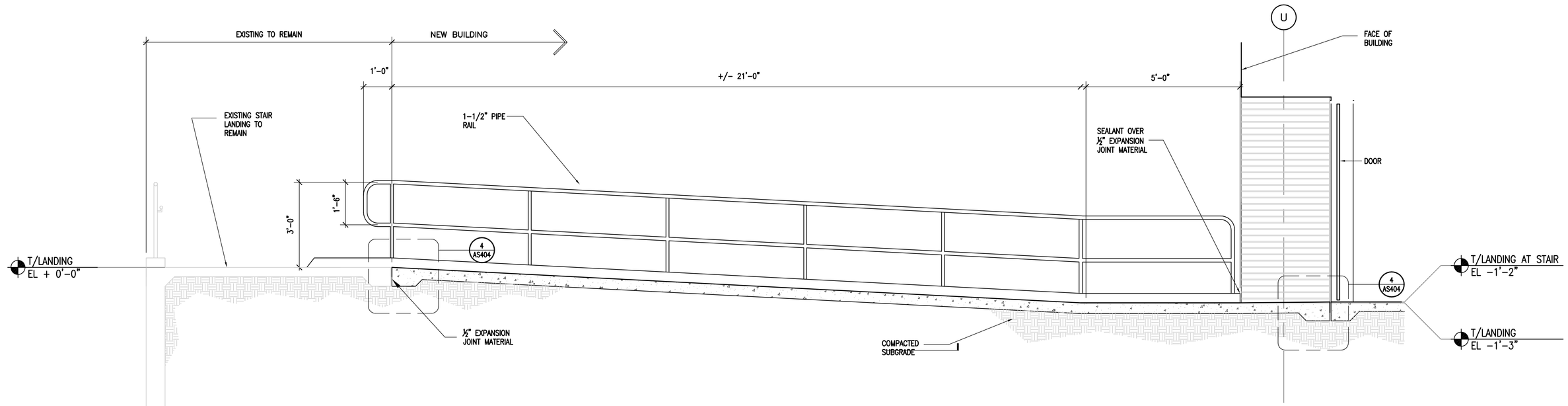


**1 ENLARGED SECTION-ACCESSIBLE RAMP**
1/2"=1'-0"

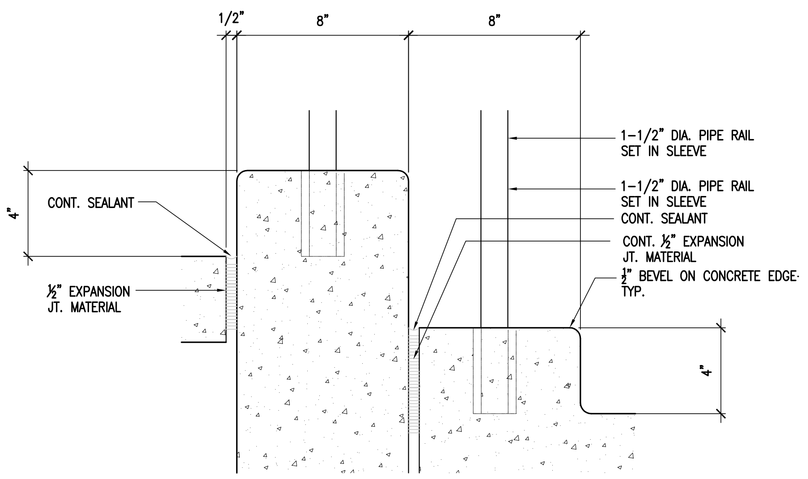


**5 DETAIL-TYP. CURB**
3"=1'-0"

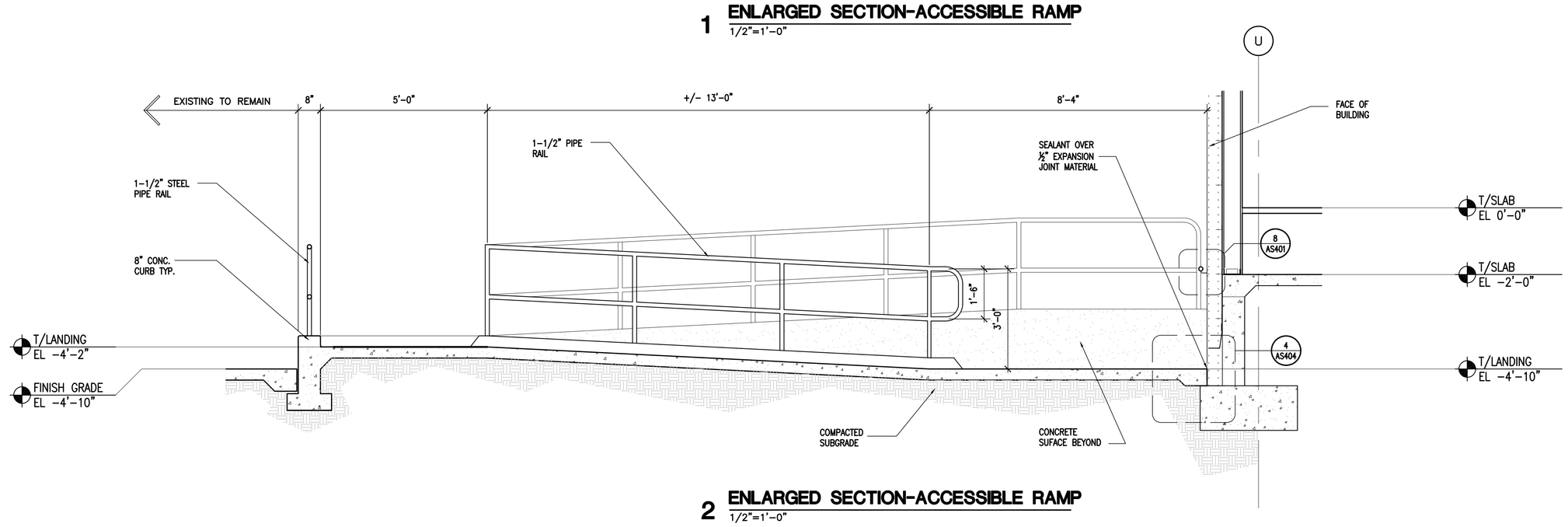


**2 ENLARGED SECTION-ACCESSIBLE RAMP**
1/2"=1'-0"

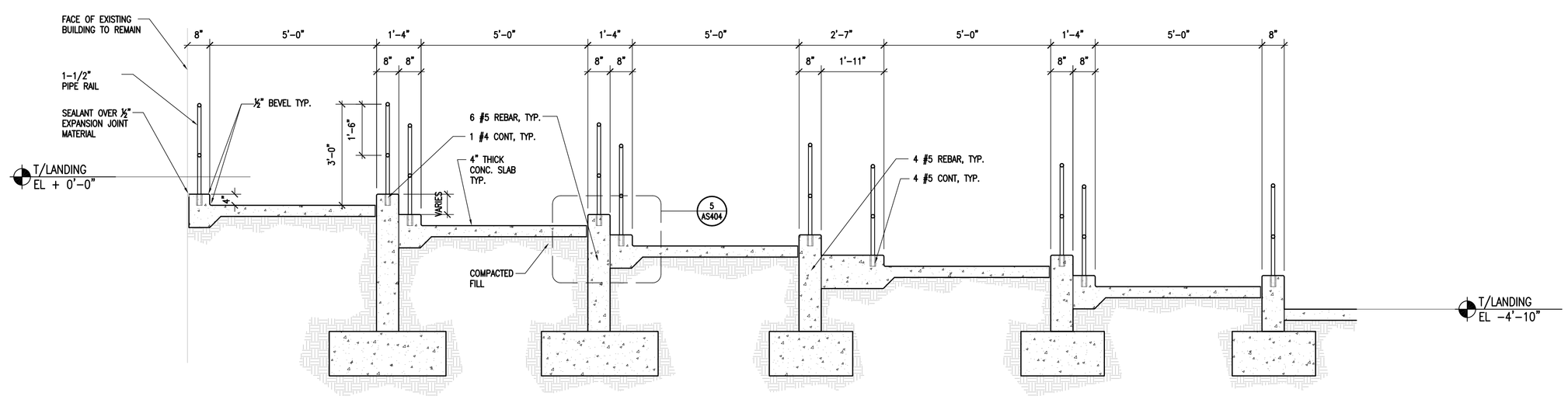


**3 ENLARGED SECTION-ACCESSIBLE RAMP**
1/2"=1'-0"

# 04-18-12 MEDICAL EQUIPMENT AND INTERIOR DESIGN REVISIONS

| REVISION | DATE |
|---|---|
| 65% SUBMITTAL | 02/19/11 |
| 95% SUBMITTAL | 03/29/11 |
| 100% SUBMITTAL | 04/13/11 |
| CONSTRUCTION SET | 05/02/11 |
| 1 Clarifications to Bid Options- ADDENDUM #4 | 11/09/11 |
| MEDICAL EQUIPMENT AND INTERIOR DESIGN REVISIONS | 04/18/12 |

CONSULTANTS:

ARCHITECT/ENGINEERS:

ttv architects, inc.
115 EAST FORSYTH ST
JACKSONVILLE, FLORIDA 32202
T 904.798.8333
F 904.798.8335
www.ttvarch.com
FL Lic.# AA0002609

Drawing Title: ACCESSIBLE RAMP SECTIONS

Approved: Project Director

Project Title: SPECIALTY TREATMENT EXPANSION PROJECT- BUILDING #1

Location: JAMES A. HALEY VETERANS' HOSPITAL

Date: 02/19/11 | Checked: TTV | Drawn: TAG

Project Number: 673-CSI-100

Building Number: 1

Drawing Number: AS404

Dwg. 20 of 40

Office of Construction and Facilities Management

Department of Veterans Affairs

VA FORM 08-6231

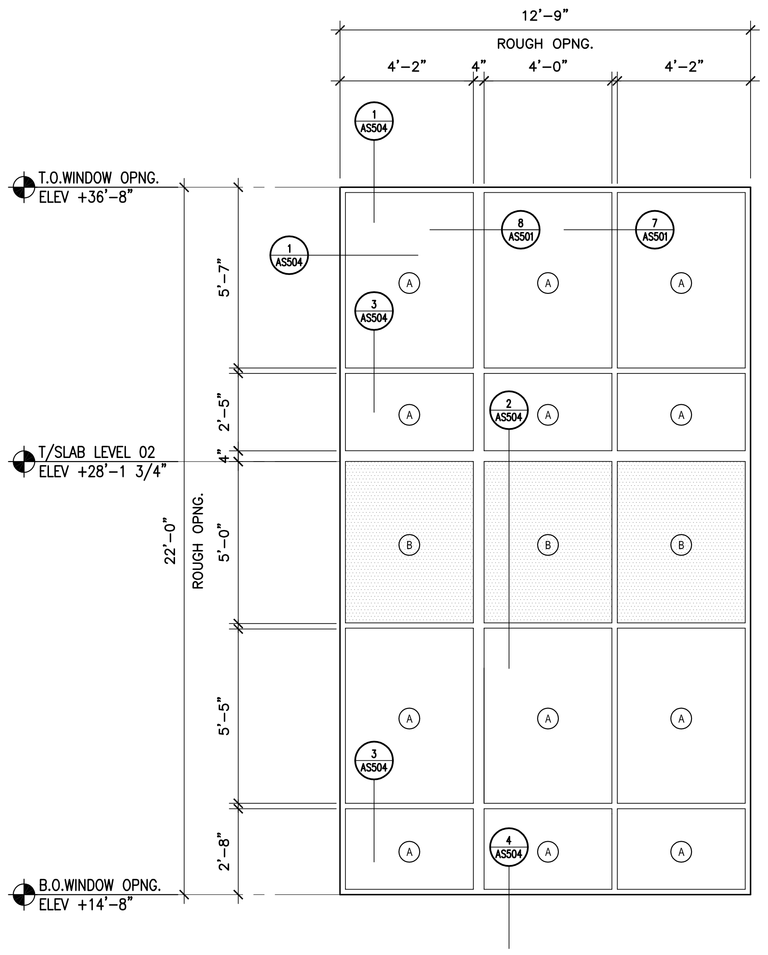


## 1 EXTERIOR WINDOW TYPE A-WEST WALL
3/8"=1'-0"

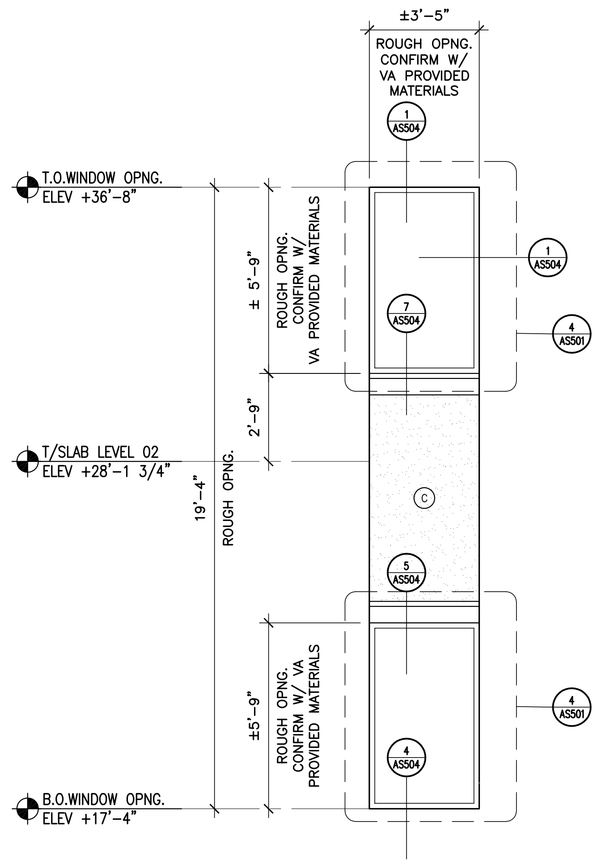


## 2 EXTERIOR WINDOW ASSEMBLY -WEST WALL
3/8"=1'-0"

| ELEVATION MATERIALS LEGEND |
|---|
| (A) 1 5/16" INSULATED LAMINATED VISION GLASS- LARGE MISSLE IMPACT |
| (B) 9/16" SPANDREL GLASS- LAMINATED GLAZING- LARGE MISSLE IMPACT |
| (C) 1" EIFS |

WINDOW NOTES:

1. WINDOWS TO BE LARGE MISSLE IMPACT TYPE.
2. WINDOW FRAMES TO BE 2" X 6" ALUMINUM TYP, UNO
3. GLAZING TO MATCH TINT OF ADJACENT BUILDING.

## 3 NOT USED
NTS

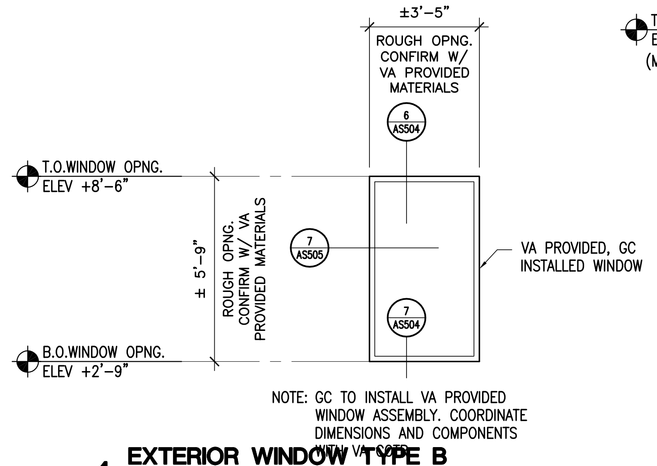


NOTE: GC TO INSTALL VA PROVIDED WINDOW ASSEMBLY. COORDINATE DIMENSIONS AND COMPONENTS WITH VA SPEC.

## 4 EXTERIOR WINDOW TYPE B
3/8"=1'-0"

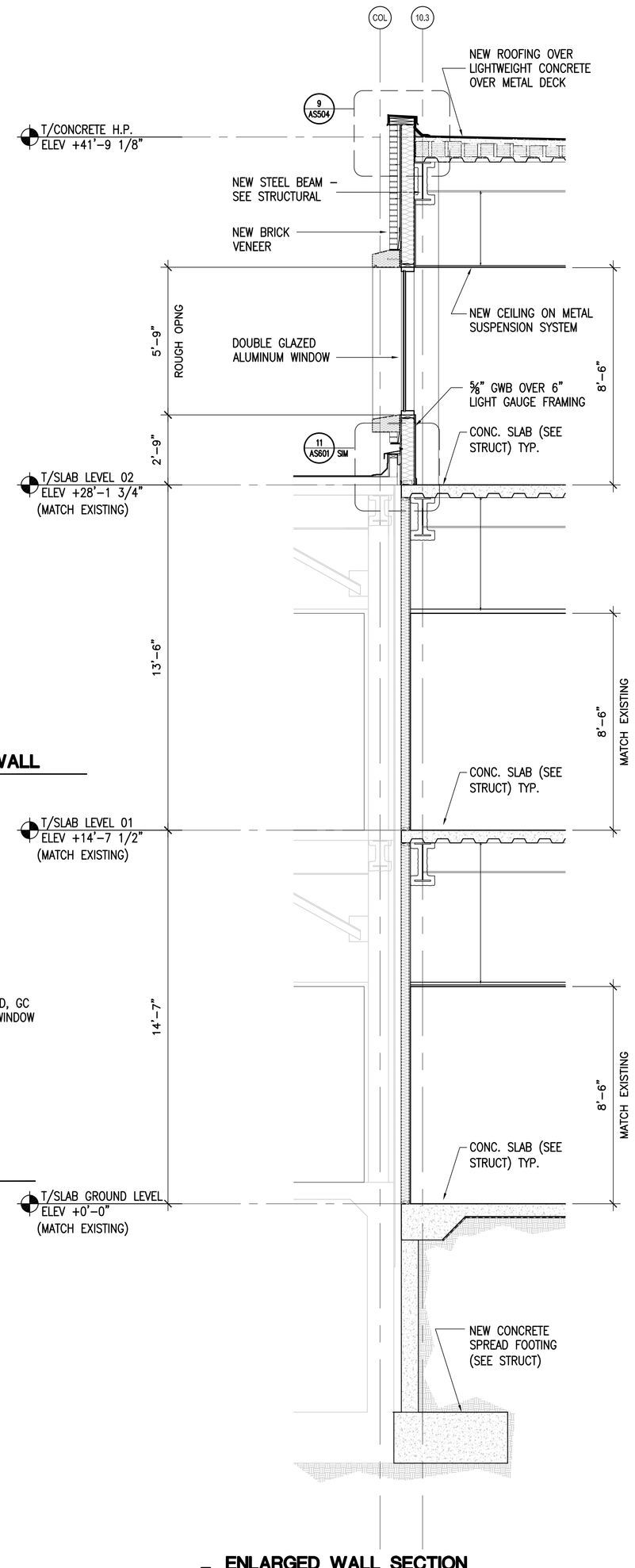


## 5 ENLARGED WALL SECTION
3/8"=1'-0"

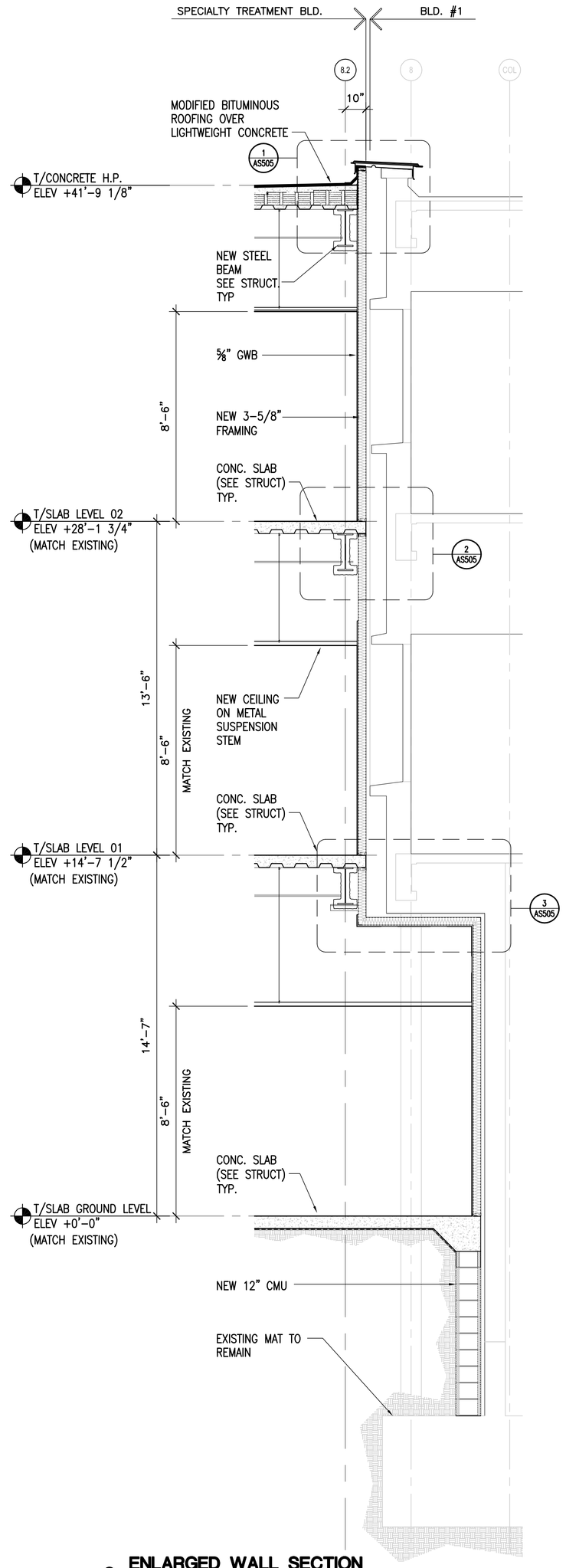


## 6 ENLARGED WALL SECTION
3/8"=1'-0"

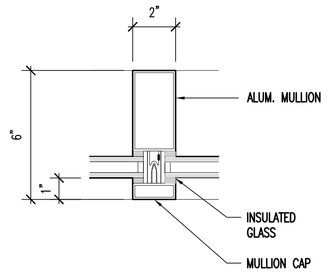


## 7 TYPICAL DETAIL-MULLION
3"=1'-0"

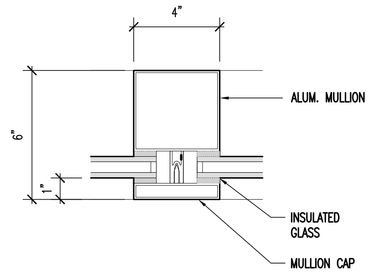


## 8 TYPICAL DETAIL-MULLION
3"=1'-0"

# 04-18-12 MEDICAL EQUIPMENT AND INTERIOR DESIGN REVISIONS

| REVISION | DATE |
|---|---|
| 65% SUBMITTAL | 02/19/11 |
| 95% SUBMITTAL | 03/29/11 |
| 100% SUBMITTAL | 04/13/11 |
| CONSTRUCTION SET | 05/02/11 |
| 1 Clarifications to Bid Options- ADDENDUM #4 | 11/09/11 |
| MEDICAL EQUIPMENT AND INTERIOR DESIGN REVISIONS | 04/18/12 |

CONSULTANTS:

ARCHITECT/ENGINEERS:

ttv architects, inc.
115 EAST FORSYTH ST
JACKSONVILLE, FLORIDA 32202
T 904.798.8333
F 904.798.8335
www.ttvarch.com
FL Lic#AA0002609

Drawing Title: WALL SECTIONS AND DETAILS

Approved Project Director

Project Title: SPECIALTY TREATMENT EXPANSION PROJECT- BUILDING #1

Location: JAMES A. HALEY VETERANS' HOSPITAL

Date: 02/19/11 | Checked: TTV | Drawn: TAG

Project Number: 673-CSI-100

Building Number: 1

Drawing Number: AS501

Dwg. 21 of 40

Office of Construction and Facilities Management

Department of Veterans Affairs

VA FORM 08-6231

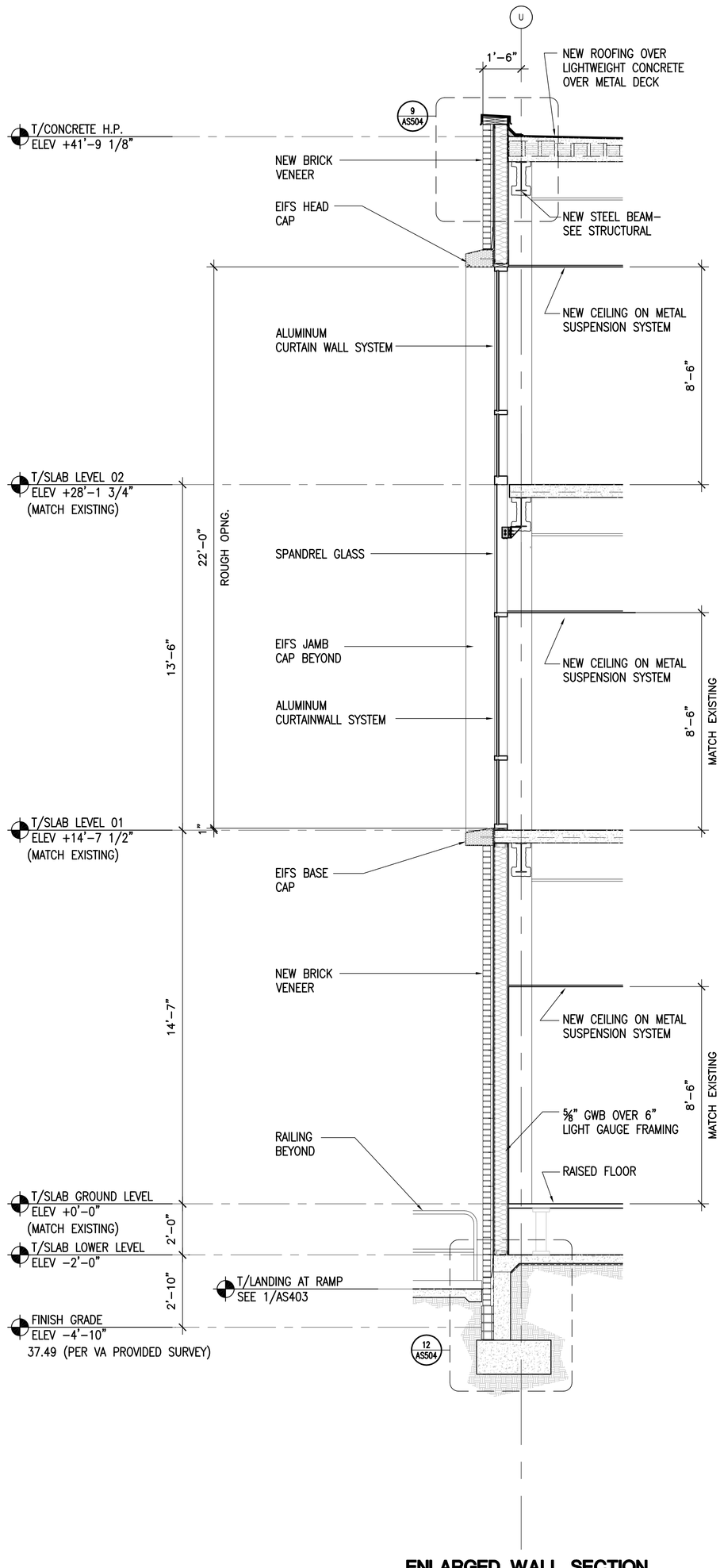


1 **ENLARGED WALL SECTION**
3/8"=1'-0"

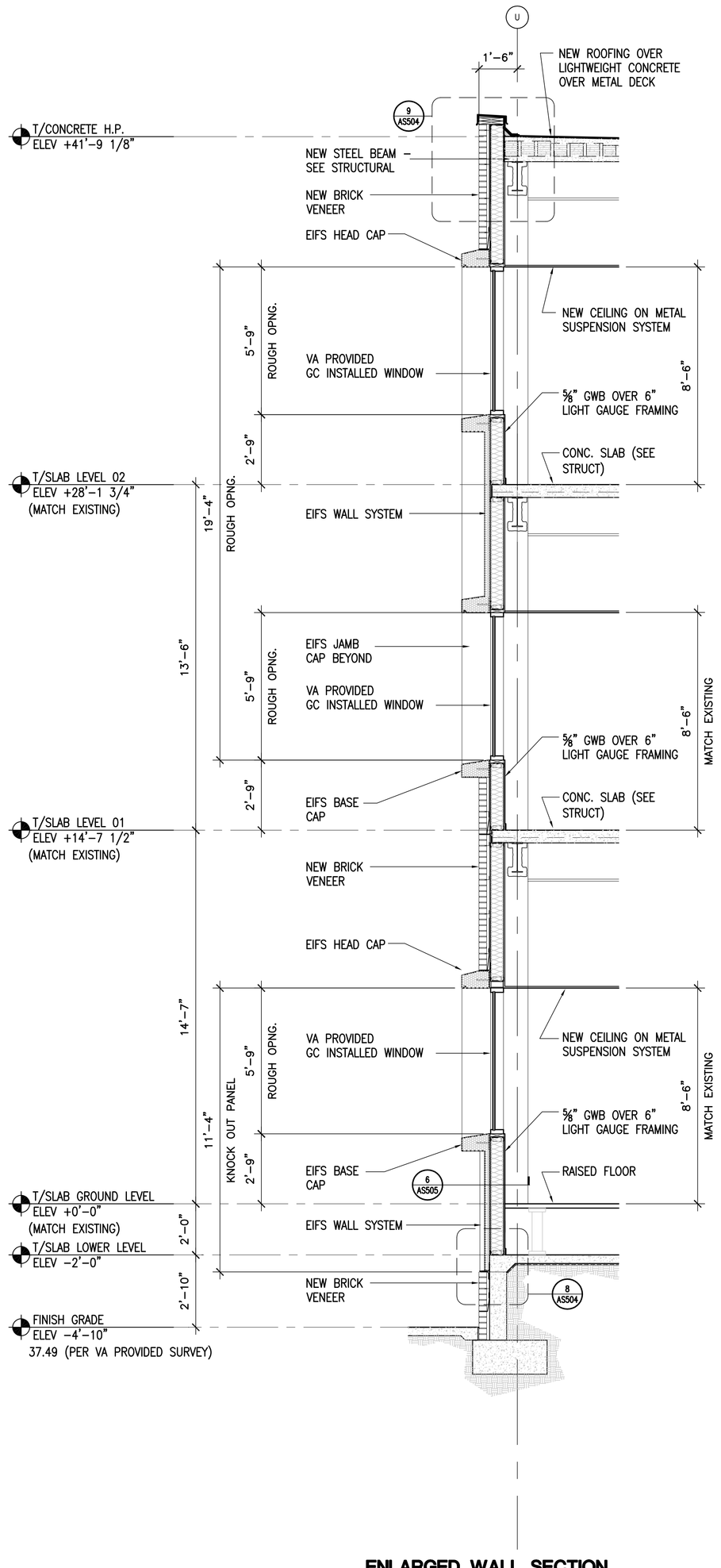


2 **ENLARGED WALL SECTION**
3/8"=1'-0"

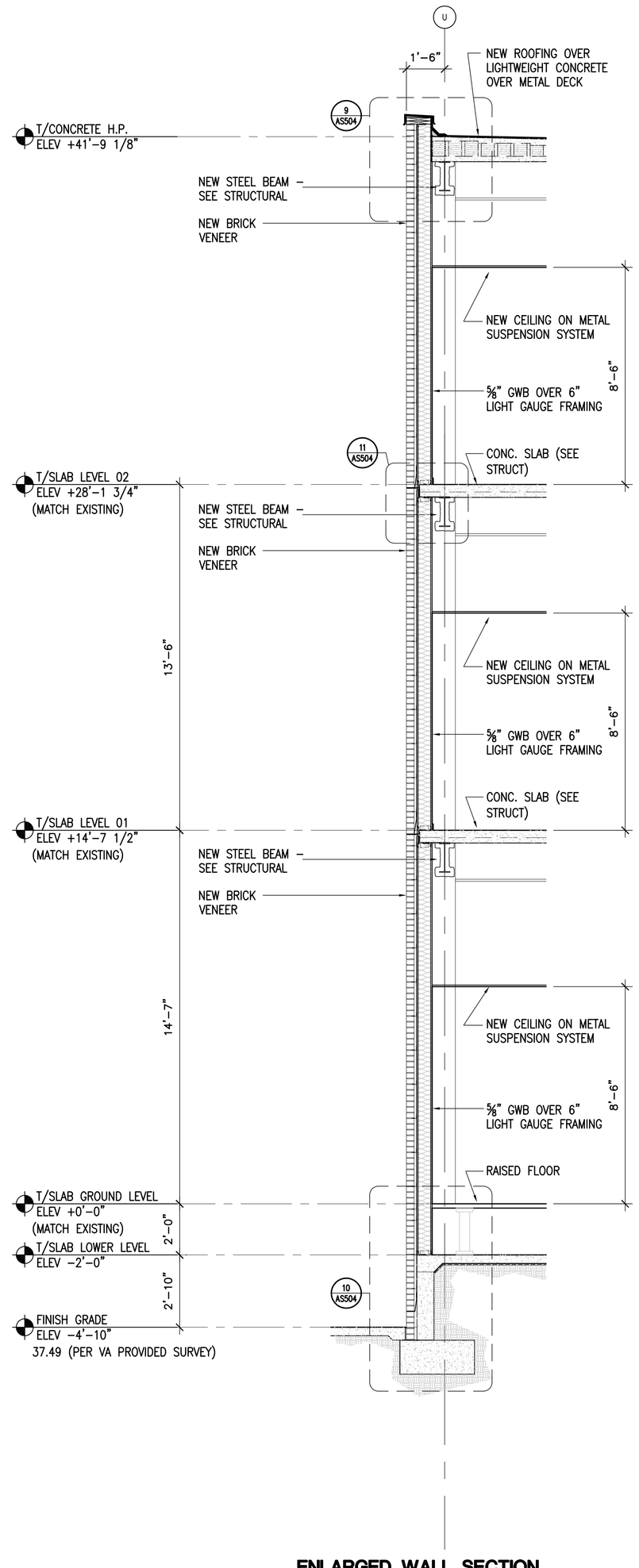


3 **ENLARGED WALL SECTION**
3/8"=1'-0"

# 04-18-12 MEDICAL EQUIPMENT AND INTERIOR DESIGN REVISIONS

| REVISION | DATE |
|---|---|
| 65% SUBMITTAL | 02/19/11 |
| 95% SUBMITTAL | 03/29/11 |
| 100% SUBMITTAL | 04/13/11 |
| CONSTRUCTION SET | 05/02/11 |
| 1 Clarifications to Bid Options- ADDENDUM #4 | 11/09/11 |
| MEDICAL EQUIPMENT AND INTERIOR DESIGN REVISIONS | 04/18/12 |

CONSULTANTS:

ARCHITECT/ENGINEERS:

ttv architects, inc.
115 EAST FORSYTH ST
JACKSONVILLE, FLORIDA 32202
T 904.798.8333
F 904.798.8335
www.ttvarch.com
FL Lic.# AA0002609

Drawing Title: WALL SECTIONS AND DETAILS

Approved: Project Director

Project Title: SPECIALTY TREATMENT EXPANSION PROJECT- BUILDING #1

Location: JAMES A. HALEY VETERANS' HOSPITAL

Date: 02/19/11 | Checked: TTV | Drawn: TAG

Project Number: 673-CSI-100

Building Number: 1

Drawing Number: AS502

Dwg. 22 of 40

Office of Construction and Facilities Management

Department of Veterans Affairs

VA FORM 08-6231

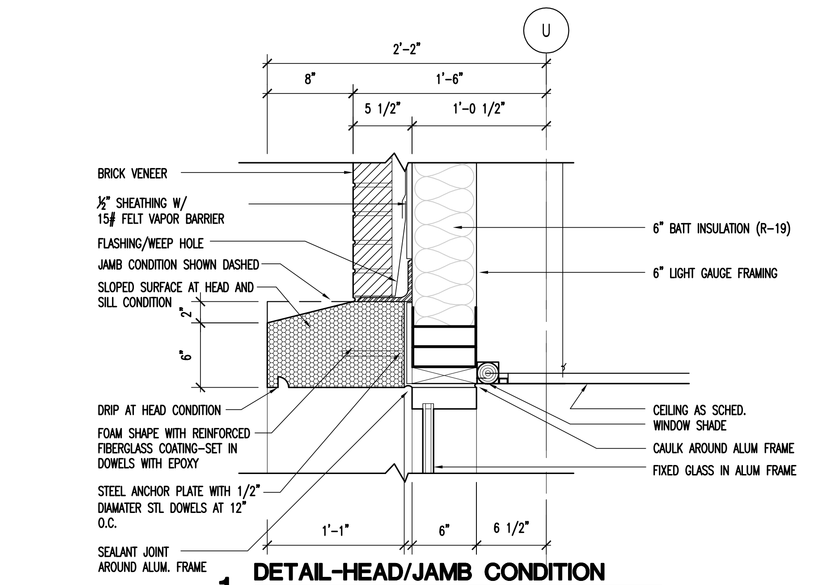


## 1 DETAIL-HEAD/JAMB CONDITION
1-1/2"=1'

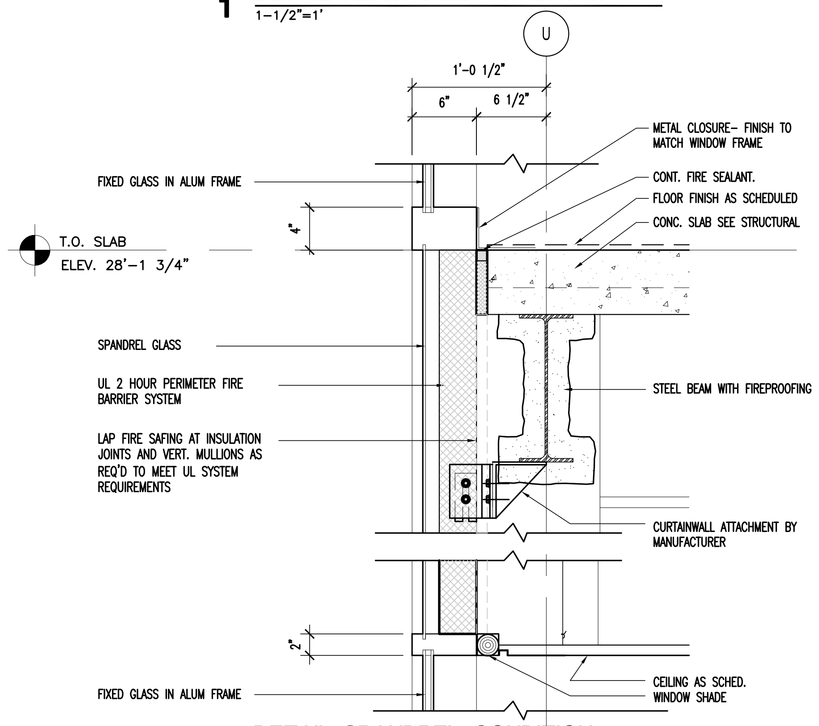


## 2 DETAIL-SPANDREL CONDITION
1-1/2"=1'

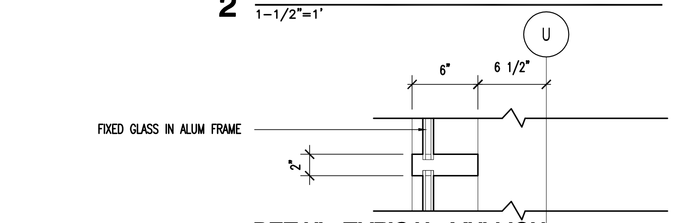


## 3 DETAIL-TYPICAL MULLION
1-1/2"=1'

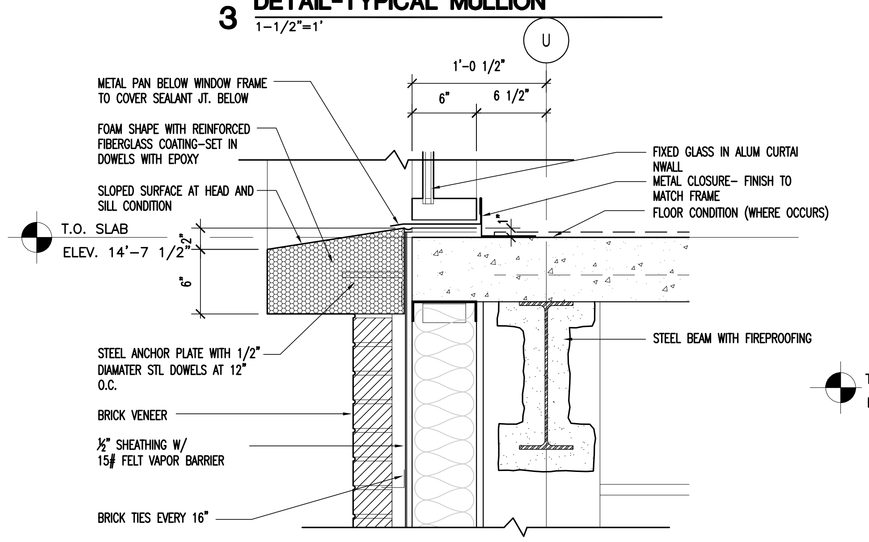


## 4 DETAIL-SILL CONDITION
1-1/2"=1'

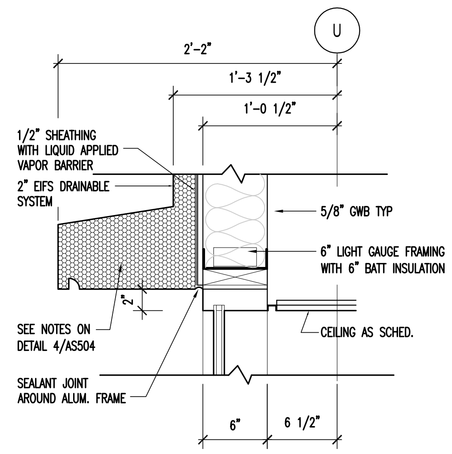


## 5 DETAIL-HEAD CONDITION
1-1/2"=1'

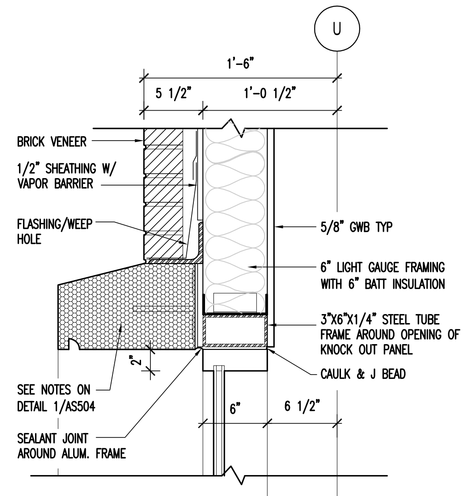


## 6 HEAD CONDITION AT KNOCK OUT PANEL
1-1/2"=1'

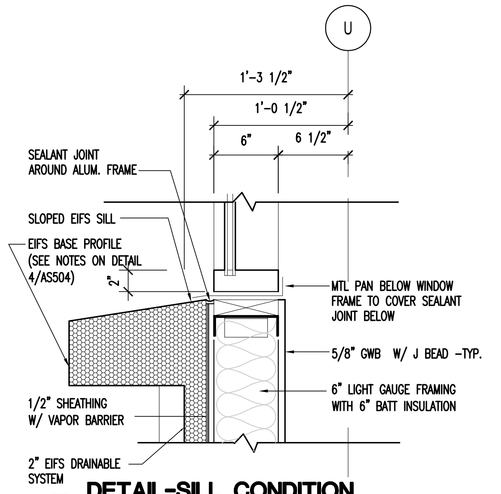


## 7 DETAIL-SILL CONDITION
1-1/2"=1'

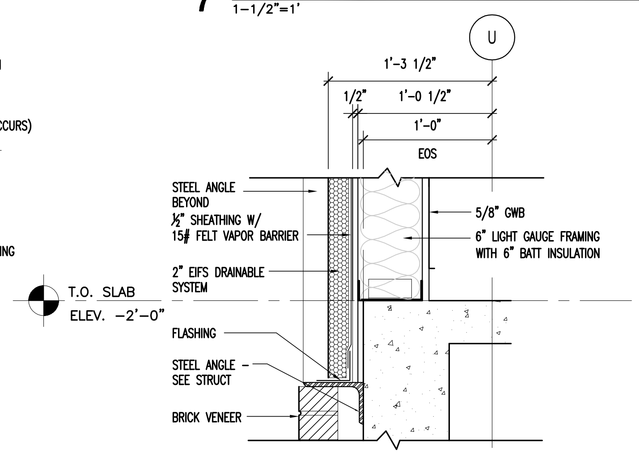


## 8 BASE CONDITION AT KNOCK OUT PANEL
1-1/2"=1'

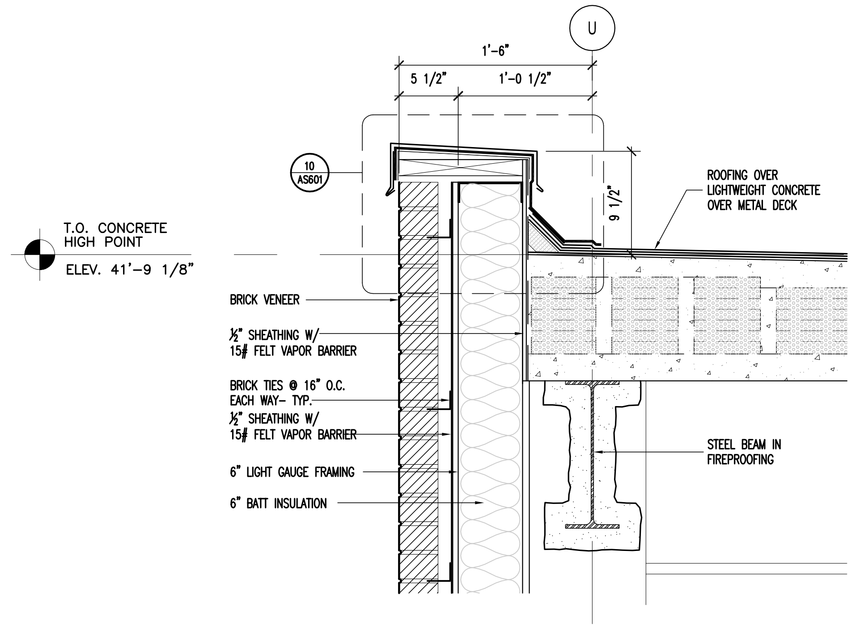


## 9 DETAIL AT PARAPET
1-1/2"=1'

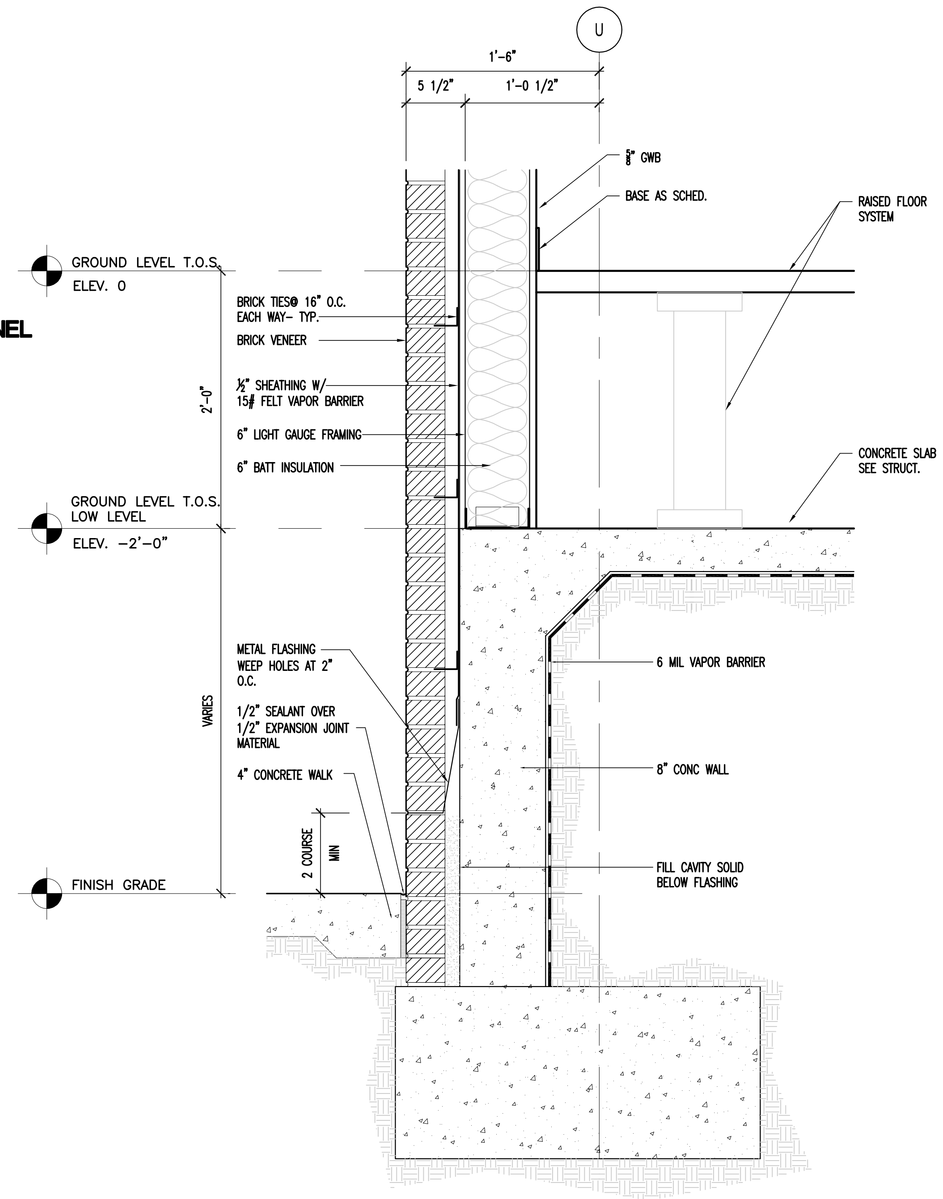


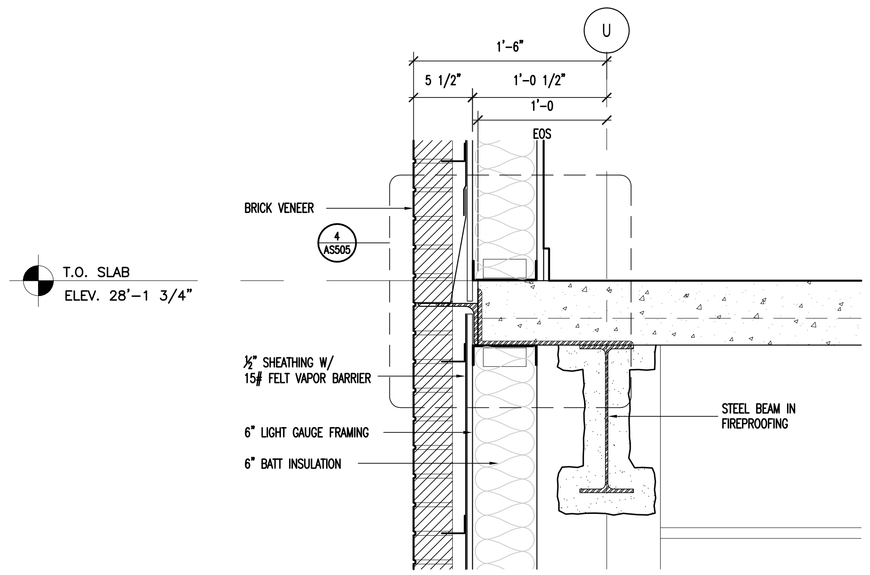


## 11 DETAIL AT SLAB EDGE
1-1/2"=1'

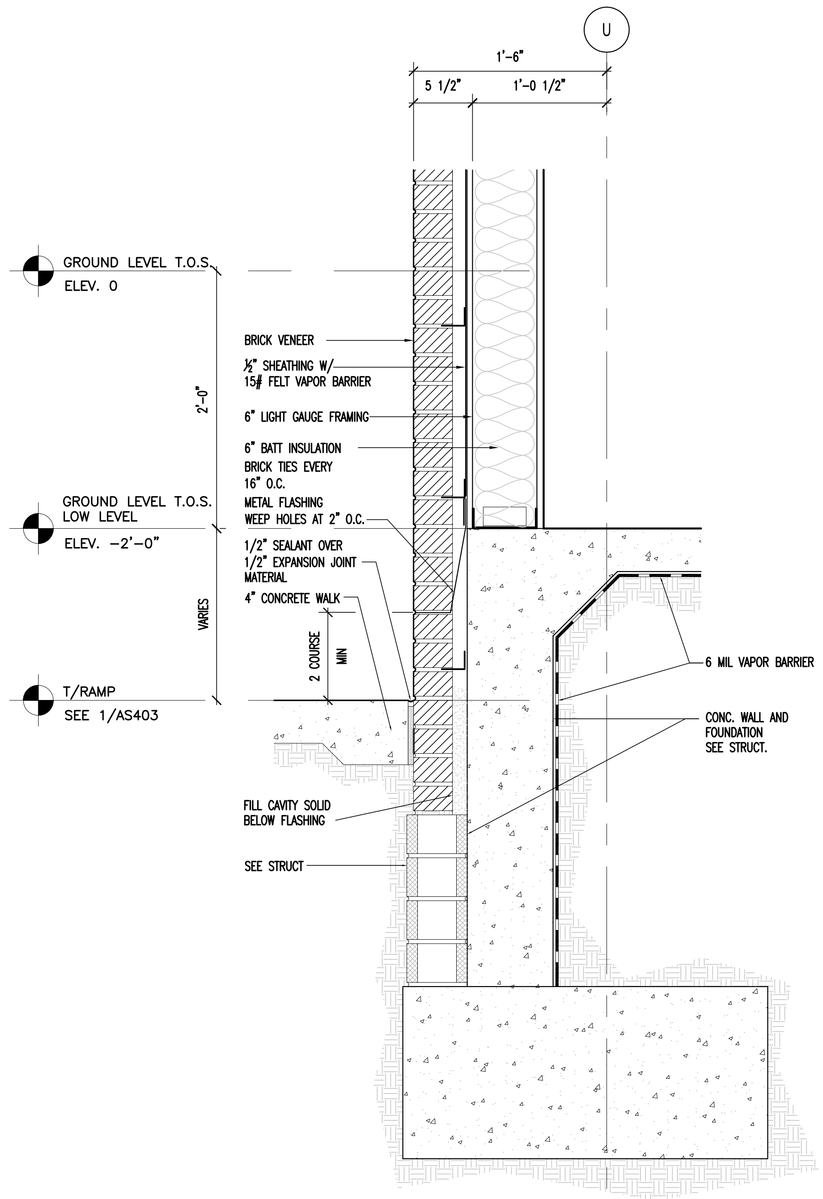


## 10 DETAIL-FOUNDATION
1-1/2"=1'

## 12 DETAIL-FOUNDATION
1-1/2"=1'

**04-18-12 MEDICAL EQUIPMENT AND INTERIOR DESIGN REVISIONS**

| REVISION | DATE |
|---|---|
| 65% SUBMITTAL | 02/19/11 |
| 95% SUBMITTAL | 03/29/11 |
| 100% SUBMITTAL | 04/13/11 |
| CONSTRUCTION SET | 05/02/11 |
| 1 Clarifications to Bid Options- ADDENDUM #4 | 11/09/11 |
| MEDICAL EQUIPMENT AND INTERIOR DESIGN REVISIONS | 04/18/12 |

CONSULTANTS:

ARCHITECT/ENGINEERS:

ttv architects, inc.
110 EAST FOURTH PLAT
JACKSONVILLE, FLORIDA 32202
T 904.798.8333
F 904.798.8335
www.ttvarch.com
FL Lic.#AA0002609

Drawing Title: WALL SECTIONS AND DETAILS

Approved: Project Director

Project Title: SPECIALTY TREATMENT EXPANSION PROJECT- BUILDING #1

Location: JAMES A. HALEY VETERANS' HOSPITAL

Date: 02/19/11 | Checked: TTV | Drawn: TAG

Project Number: 673-CSI-100

Building Number: 1

Drawing Number: AS504

Dwg. 23 of 40

Office of Construction and Facilities Management

Department of Veterans Affairs

VA FORM 08-6231

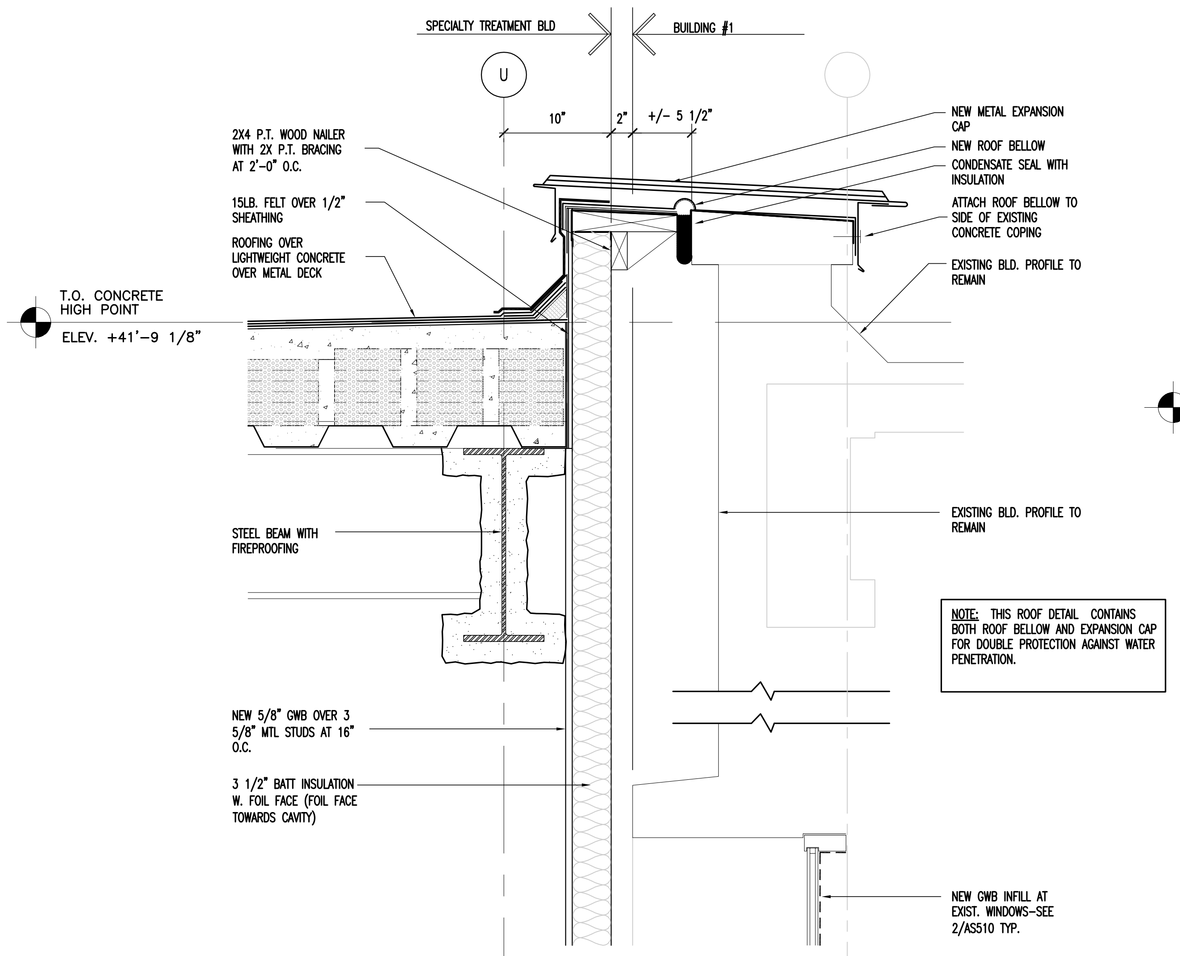


**1 PARAPET CONDITION AT BLD 1 INTERFACE**
1-1/2"=1'

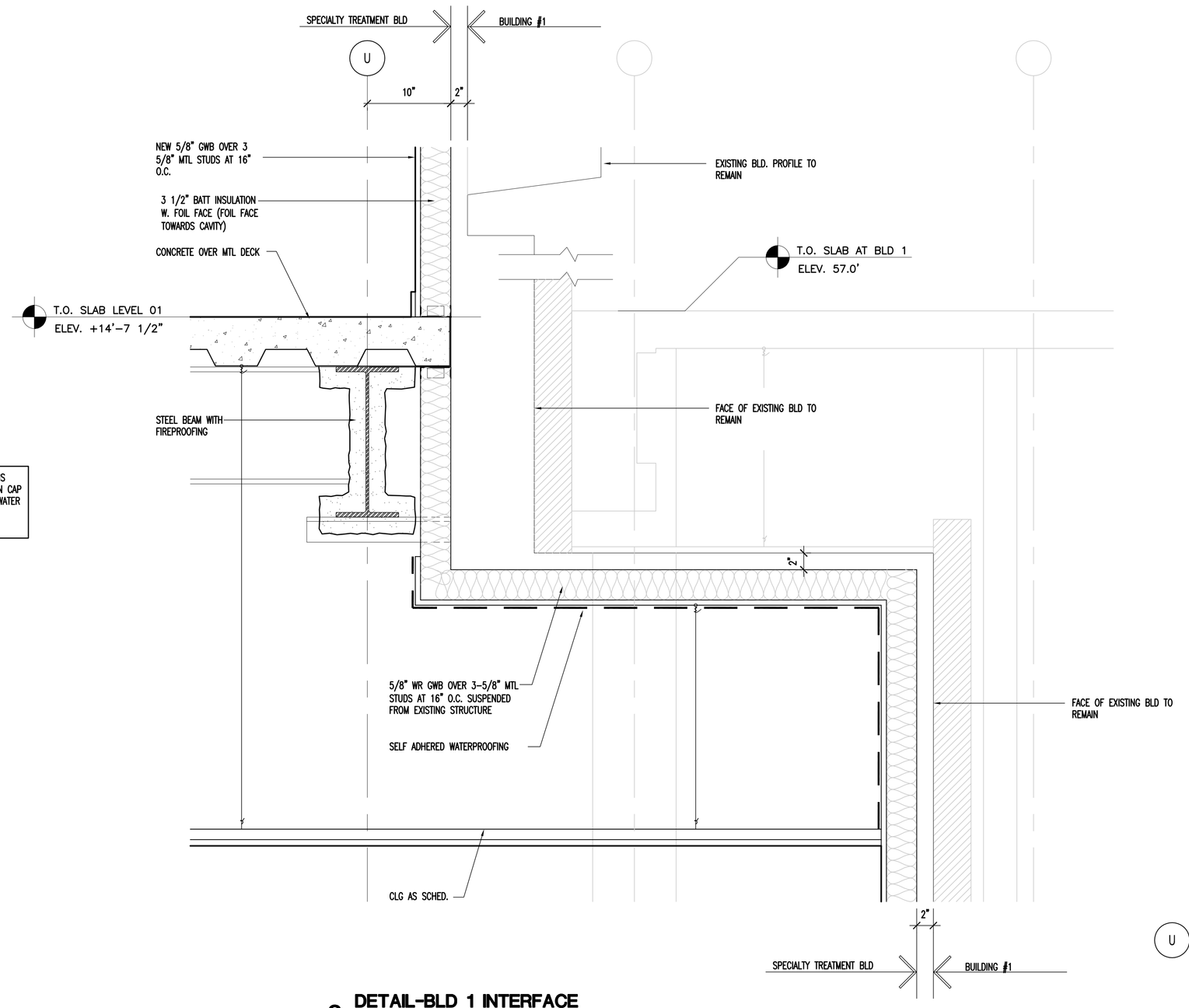


**3 DETAIL-BLD 1 INTERFACE**
1-1/2"=1'

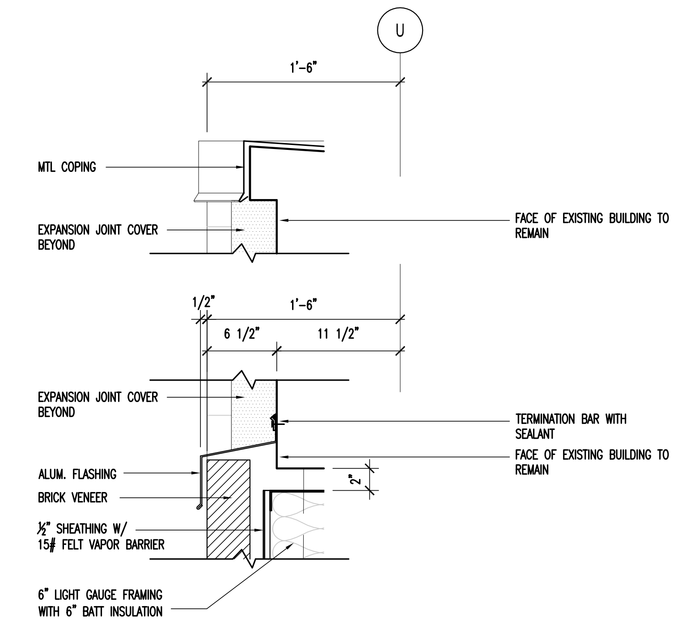


**5 FLASHING DETAIL-BLD 1 INTERFACE**
1-1/2"=1'

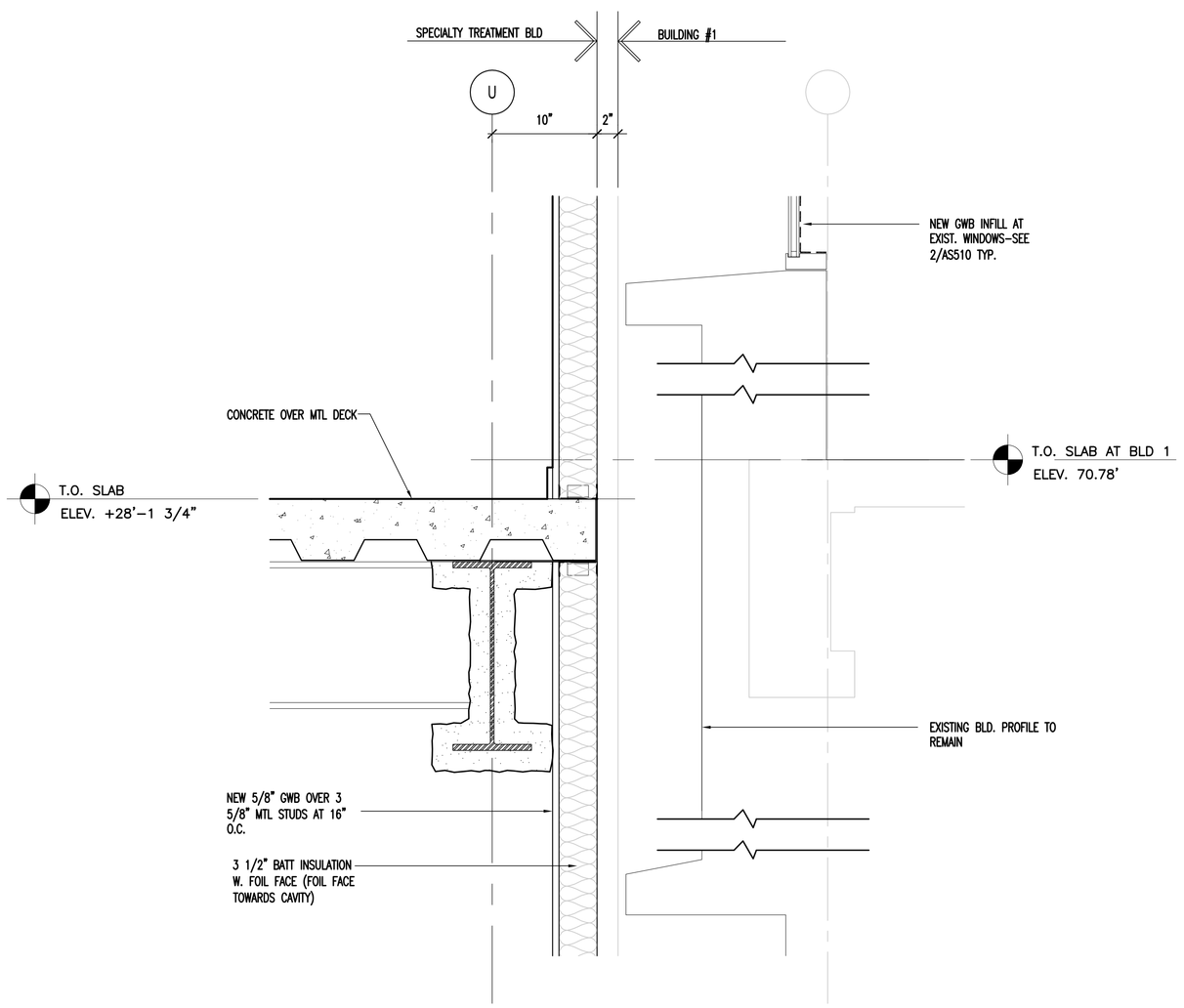


**2 DETAIL-BLD 1 INTEREFACE**
1-1/2"=1'

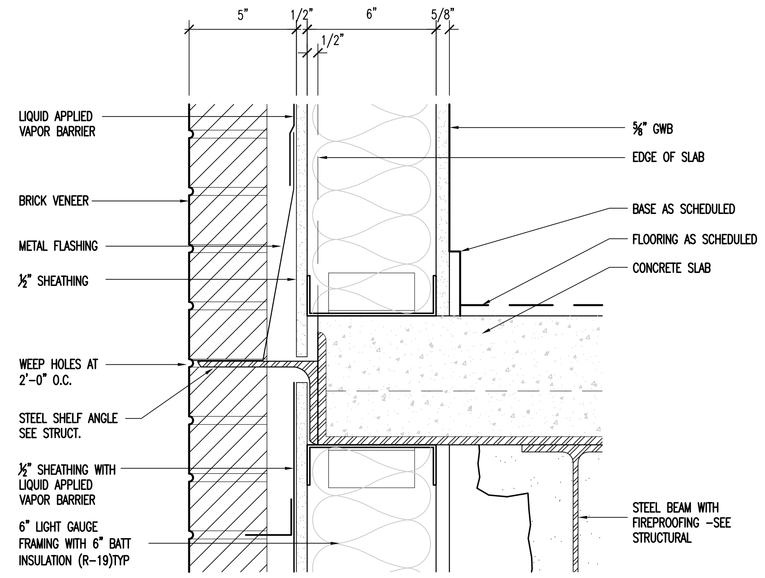


**4 SHELF ANGLE AT EDGE OF SLAB**
3"=1'-0"

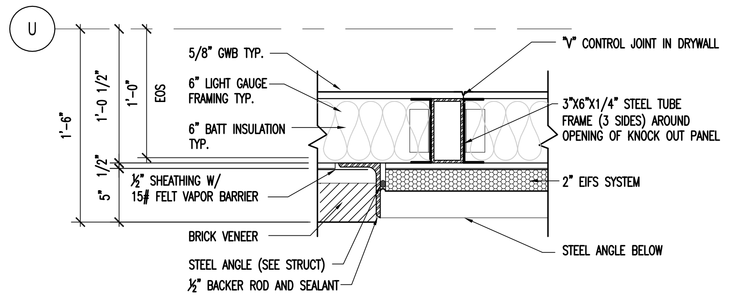


**6 JAMB DETAIL - KNOCK OUT PANEL**
1-1/2"=1'-0"

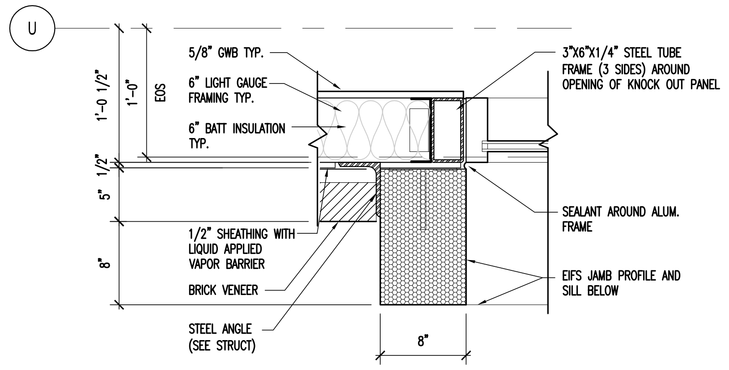


**7 JAMB DETAIL-KNOCK OUT PANEL**
1-1/2"=1'-0"

**04-18-12 MEDICAL EQUIPMENT AND INTERIOR DESIGN REVISIONS**

| REVISION | DATE |
|---|---|
| 65% SUBMITTAL | 02/19/11 |
| 95% SUBMITTAL | 03/29/11 |
| 100% SUBMITTAL | 04/13/11 |
| CONSTRUCTION SET | 05/02/11 |
| 1 Clarifications to Bid Options- ADDENDUM #4 | 11/09/11 |
| MEDICAL EQUIPMENT AND INTERIOR DESIGN REVISIONS | 04/18/12 |

CONSULTANTS:

ARCHITECT/ENGINEERS:

ttv architects, inc.
110 EAST FORSYTH ST
JACKSONVILLE, FLORIDA 32202
T 904.798.8333
F 904.798.8335
www.ttvarch.com
FL Lic #AA0002609

Drawing Title: WALL SECTIONS AND DETAILS

Approved: Project Director

Project Title: SPECIALTY TREATMENT EXPANSION PROJECT- BUILDING #1

Location: JAMES A. HALEY VETERANS' HOSPITAL

Date: 02/19/11 | Checked: TTV | Drawn: TAG

Project Number: 673-CSI-100

Building Number: 1

Drawing Number: AS505

Dwg. 24 of 40

Office of Construction and Facilities Management

Department of Veterans Affairs

VA FORM 08-6231

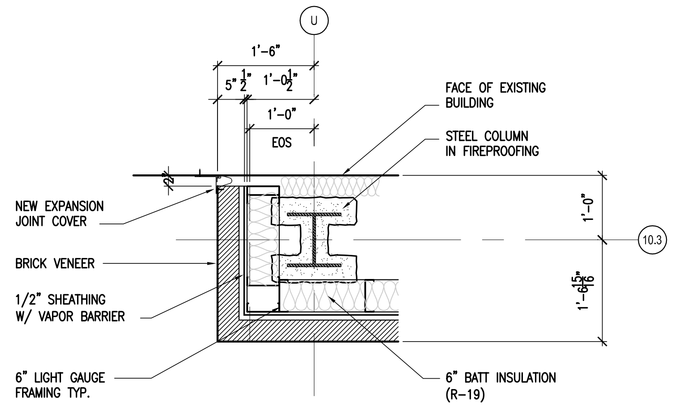


## 1 COLUMN DETAIL AT N/W CORNER EXP. JOINT
3/4"=1'-0"

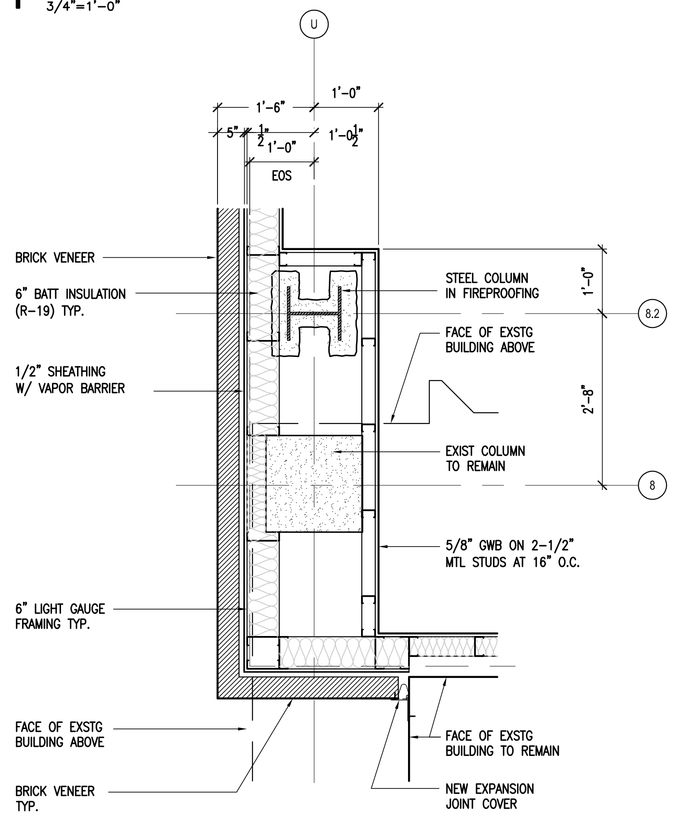


## 2 S/W CORNER COLUMN DETAIL AT GROUND
3/4"=1'-0"

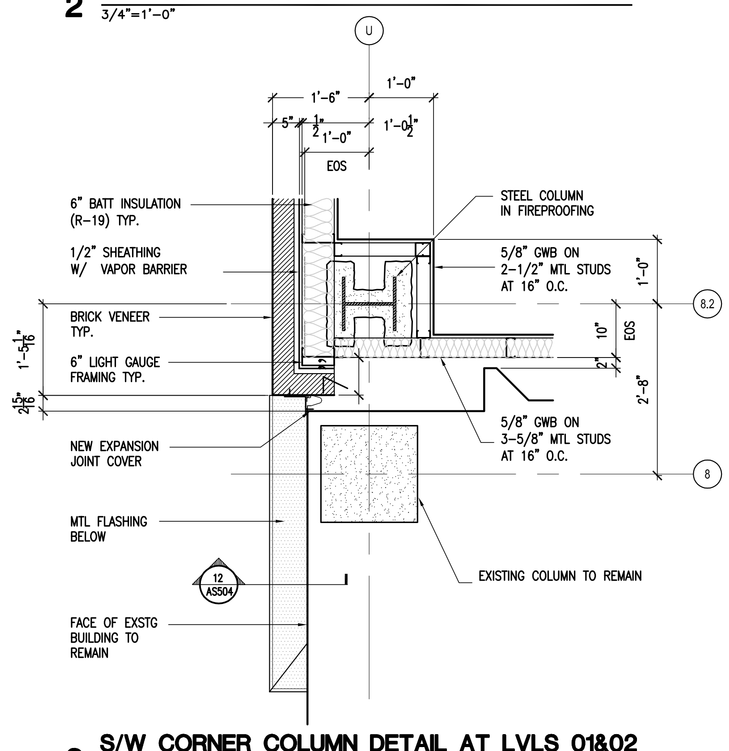


## 3 S/W CORNER COLUMN DETAIL AT LVLS 01&02
3/4"=1'-0"

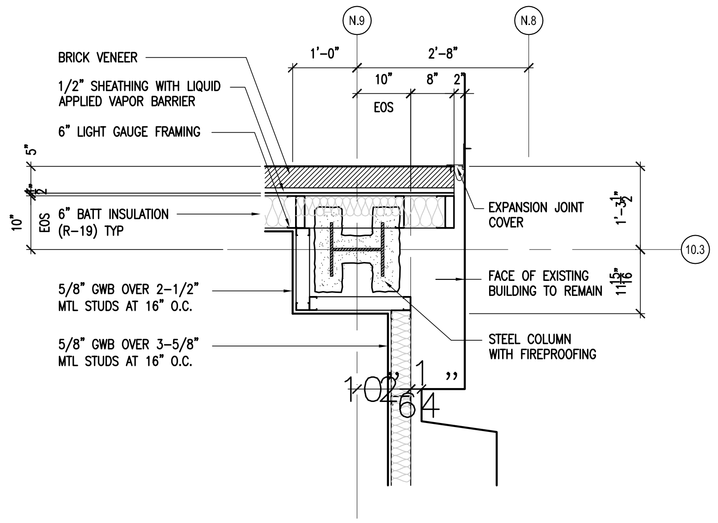


## 4 N/E CORNER COLUMN DETAIL AT LEVEL 02
3/4"=1'-0"

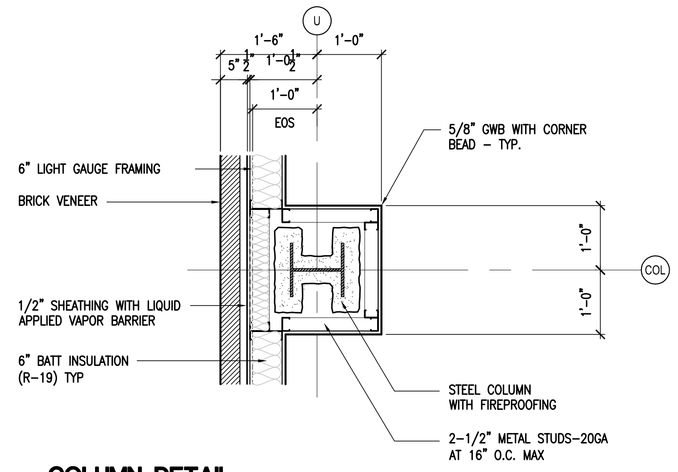


## 5 COLUMN DETAIL
3/4"=1'-0"

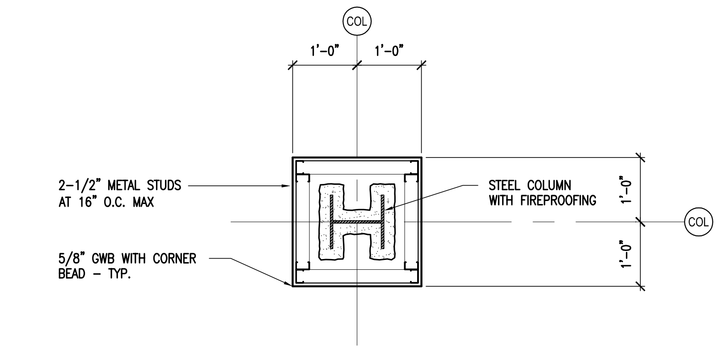


## 6 DETAIL-TYPICAL INTERIOR COLUMN
3/4"=1'-0"

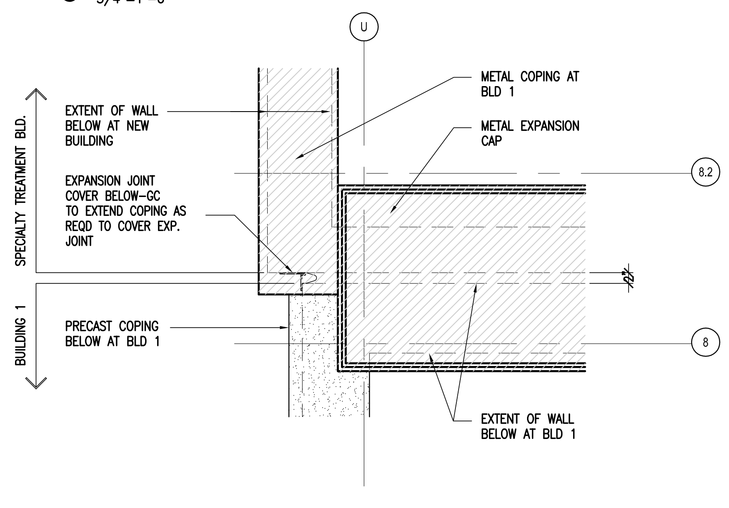


## 7 ROOF PLAN DETAIL AT S/W CORNER
3/4"=1'-0"

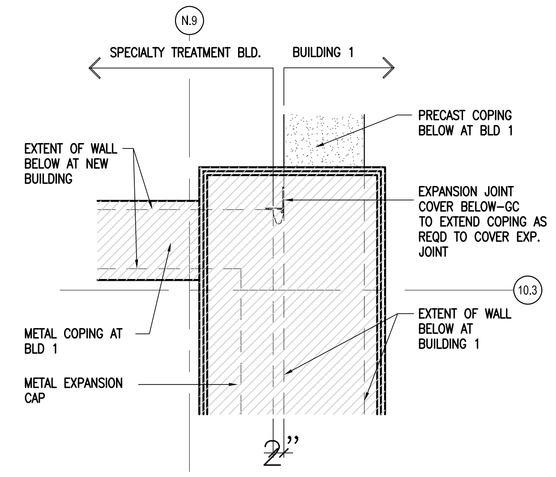


## 8 ROOF PLAN AT N/E CORNER
3/4"=1'-0"

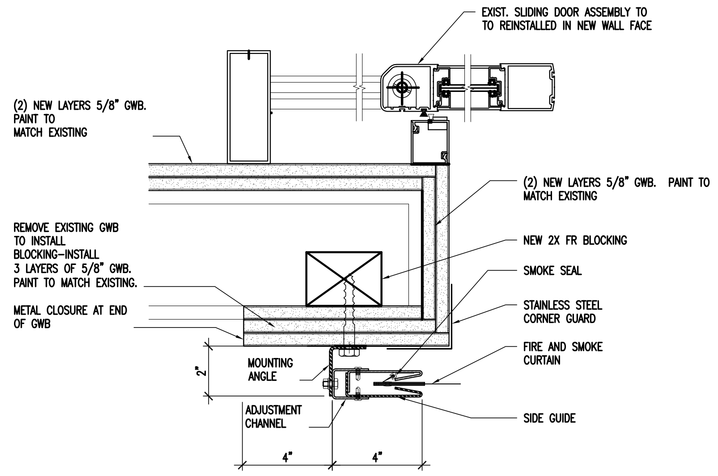


## 9 FIRE CURTAIN- JAMB DETAIL AT TRACK
3"=1'-0"

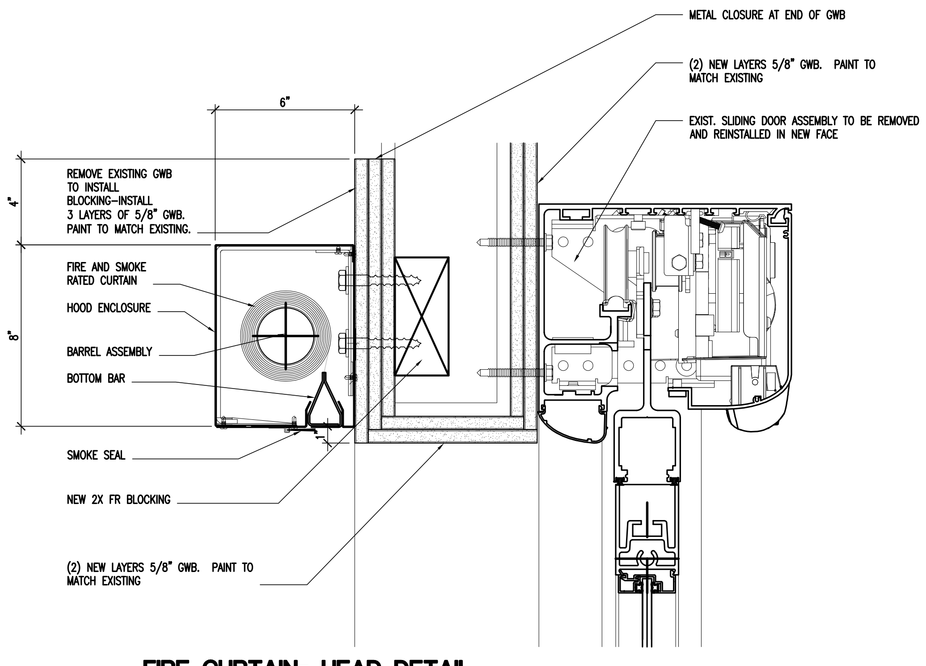


## 10 FIRE CURTAIN- HEAD DETAIL
3"=1'-0"

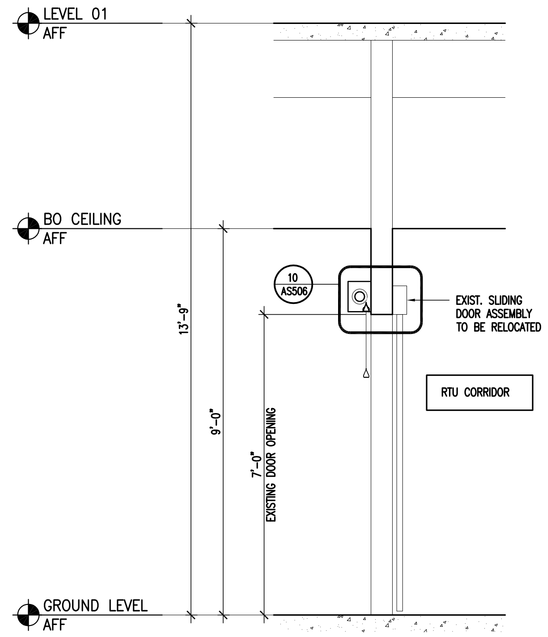


## 11 WALL SECTION-RTU CORRIDOR
1/2"=1'-0"

# 04-18-12 MEDICAL EQUIPMENT AND INTERIOR DESIGN REVISIONS

| REVISION | DATE |
|---|---|
| 65% SUBMITTAL | 02/19/11 |
| 95% SUBMITTAL | 03/29/11 |
| 100% SUBMITTAL | 04/13/11 |
| CONSTRUCTION SET | 05/02/11 |
| 1 Clarifications to Bid Options- ADDENDUM #4 | 11/09/11 |
| MEDICAL EQUIPMENT AND INTERIOR DESIGN REVISIONS | 04/18/12 |

CONSULTANTS:

ARCHITECT/ENGINEERS:

ttv architects, inc.
115 EAST FORSYTH ST
JACKSONVILLE, FLORIDA 32202
P 904.798.8000
F 904.798.8333
www.ttvarch.com
FL Lic.#AA0002609

Drawing Title: WALL SECTIONS AND DETAILS

Approved Project Director

Project Title: SPECIALTY TREATMENT EXPANSION PROJECT- BUILDING #1

Location: JAMES A. HALEY VETERANS' HOSPITAL

Date: 02/19/11 | Checked: TTV | Drawn: TAG

Project Number: 673-CSI-100

Building Number: 1

Drawing Number: AS506

Dwg. 25 of 40

Office of Construction and Facilities Management

Department of Veterans Affairs

VA FORM 08-6231

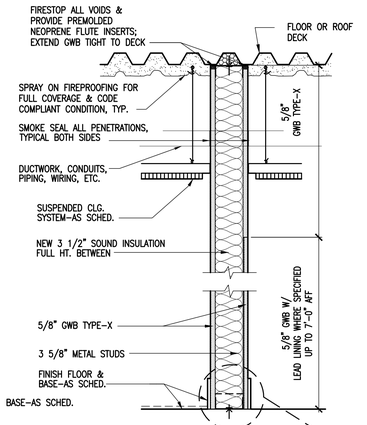


TYPE 1– METAL STUD PARTITION–FULL HEIGHT

TYPE 1A– METAL STUD PARTITION–FULL HEIGHT W/ 1/16" LEAD LINING UP TO 7' AFF & 1 ADDITIONAL FULL HEIGHT LAYER OF 5/8" GWB

TYPE 1B– 1 HOUR FIRE RATED METAL STUD PARTITION–FULL HEIGHT– UL 419

TYPE 1C– METAL STUD SMOKE PARTITION–FULL HEIGHT

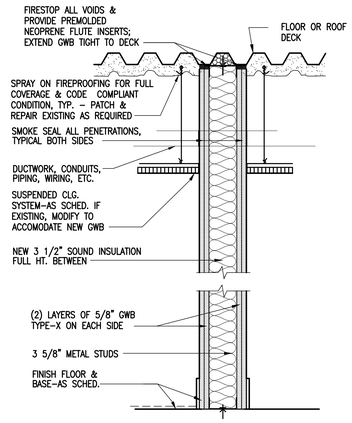


TYPE 2– 2 HOUR FIRE RATED METAL STUD PARTITION–FULL HEIGHT– UL 419

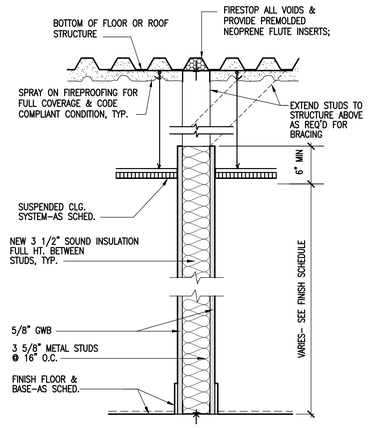


TYPE 3– METAL STUD–PARTITION EXTENDS 6" ABOVE CEILING

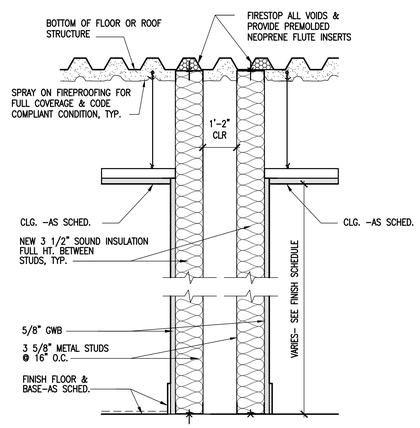


TYPE 4– METAL STUD– CHASE WALL

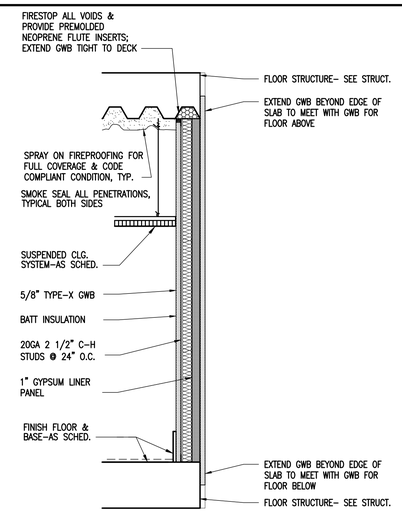


TYPE 5– 2 HOUR FIRE RATED SHAFT WALL PARTITION– UL U467

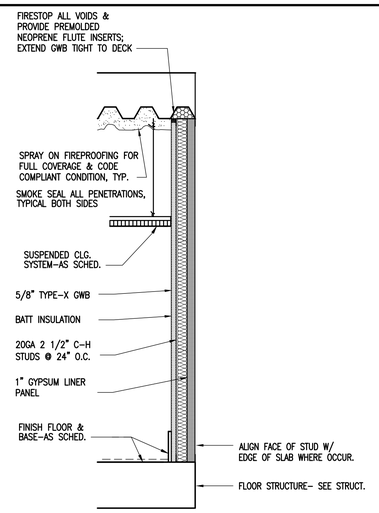


TYPE 6– 1 HOUR FIRE RATED SHAFT WALL PARTITION– UL U469

TYPE 6A– ADDITIONAL LAYER OF 5/8" GWB 2 HOUR FIRE RATED SHAFT WALL PARTITION

## WALL TYPE GENERAL NOTES

1. WHERE CERAMIC WALL TILE IS SCHEDULED WALL FINISH: PROVIDE ½" CEMENT BACKERBOARD IN LIEU OF GWB.

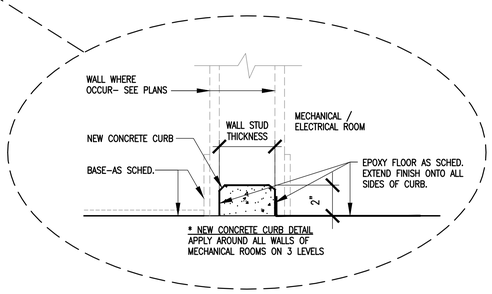


**1A MECH. ROOM CONCRETE CURB DETAIL**
3"=1'–0"

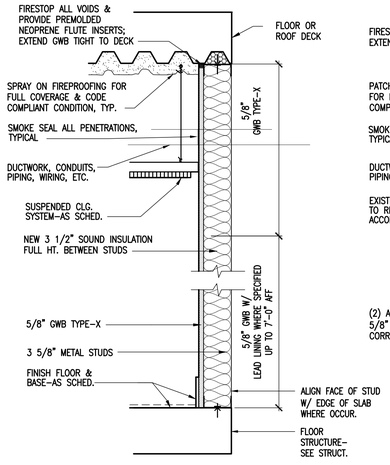


TYPE 7– 1 SIDED METAL STUD SMOKE PARTITION

TYPE 7A– 1 SIDED METAL STUD PARTITION–FULL HEIGHT

TYPE 7B– 1 SIDED METAL STUD SMOKE PARTITION W/ 1/16" LEAD LINING UP TO 7' AFF

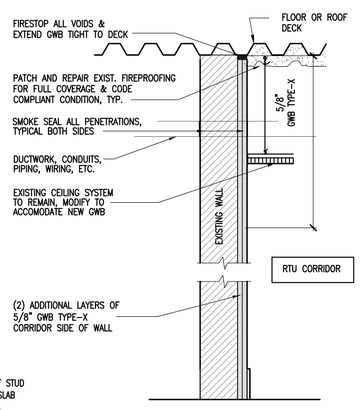


TYPE 8– 2 HOUR RATED PARTITION WITH 2 ADDITIONAL LAYERS 5/8" GWB ON CORRIDOR SIDE OF WALL

**1 WALL TYPES DETAILS**
1 1/2"=1'–0"

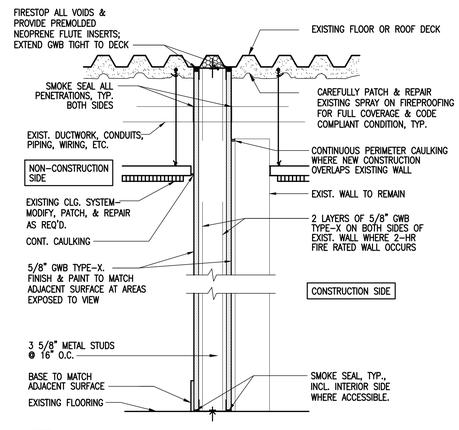


NOTES
1. G.C. TO PROVIDE CONTINUOUS CAULKING & SMOKE SEALS AS REQ'D FOR COMPLETELY SEALED CONDITION SEPARATING OPERATIONAL AREAS FROM CONSTRUCTION AREAS.
2. PROVIDE SELF CLOSING, FIRE RATED DOORS & METAL FRAMES COMMENSURATE W/PARTITION, IN ROOMS REQUIRING ACCESS.

**2 TYPICAL TEMPORARY DRYWALL CONSTRUCTION BARRIER**
1 1/2"=1'–0"

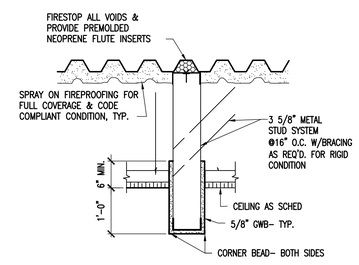


**3 TYPICAL SOFFIT DETAIL**
1 1/2"=1'–0"

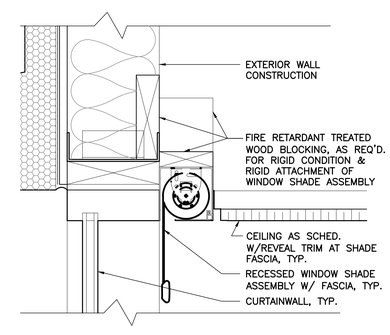


**4 TYPICAL RECESSED WINDOW SHADE DETAIL**
3"=1'–0"

# 04-18-12 MEDICAL EQUIPMENT AND INTERIOR DESIGN REVISIONS

| REVISION | DATE |
|---|---|
| 65% SUBMITTAL | 02/19/11 |
| 95% SUBMITTAL | 03/29/11 |
| 100% SUBMITTAL | 04/13/11 |
| CONSTRUCTION SET | 05/02/11 |
| 1 Clarifications to Bid Options- ADDENDUM #4 | 11/09/11 |
| MEDICAL EQUIPMENT AND INTERIOR DESIGN REVISIONS | 04/18/12 |

CONSULTANTS:

ARCHITECT/ENGINEERS:

ttv architects, inc.
1115 EAST ADAMS PLZ
JACKSONVILLE, FLORIDA 32202
T 904.798.8333
F 904.798.8335
www.ttvarch.com
FL Lic.#AA0002609

Drawing Title: WALL SECTIONS AND DETAILS

Approved: Project Director

Project Title: SPECIALTY TREATMENT EXPANSION PROJECT- BUILDING #1

Location: JAMES A. HALEY VETERANS' HOSPITAL

Date: 02/19/11 | Checked: TTV | Drawn: TAG

Project Number: 673-CSI-100

Building Number: 1

Drawing Number: AS507

Dwg. 26 of 40

Office of Construction and Facilities Management

Department of Veterans Affairs

VA FORM 08-6231

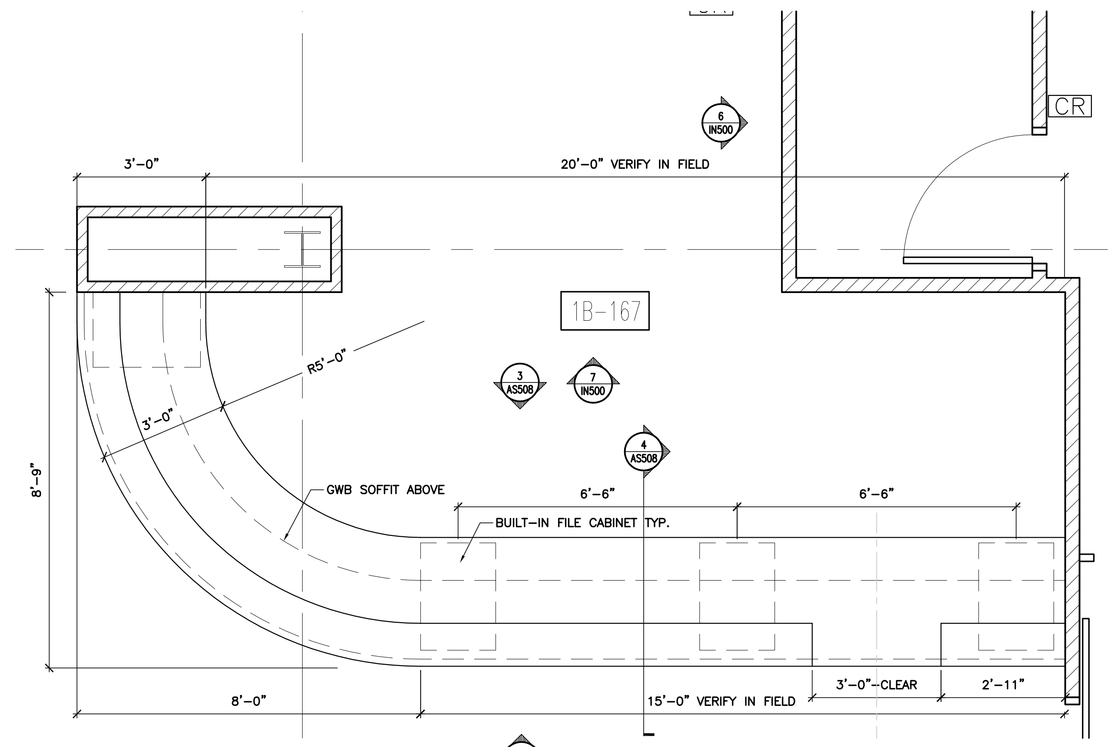


1 DESK @ NURSES STATION
1/2"=1'-0"

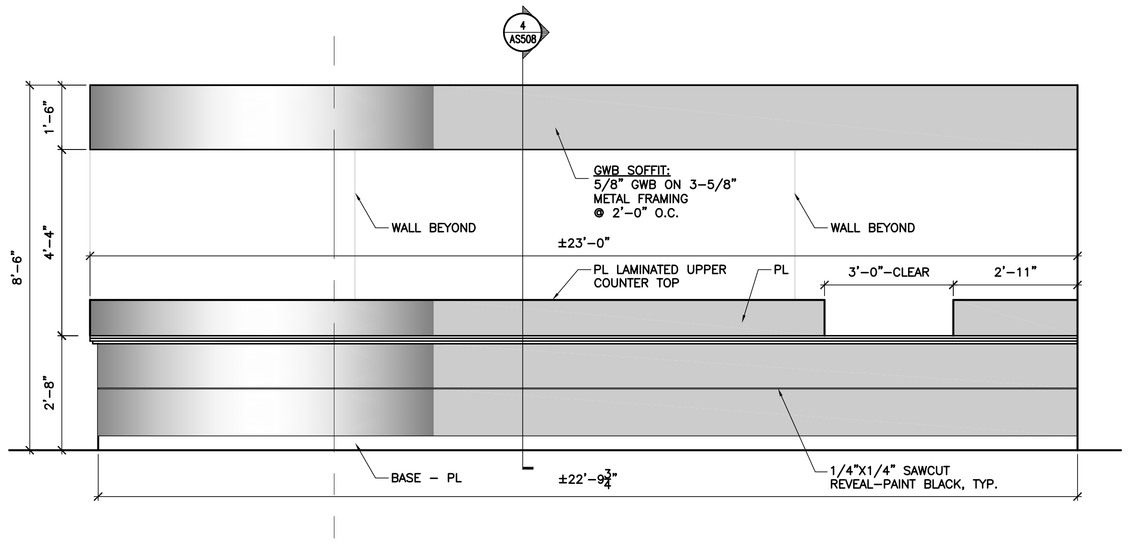


2 NURSES STATION ELEVATION - FRONT
1/2"=1'-0"

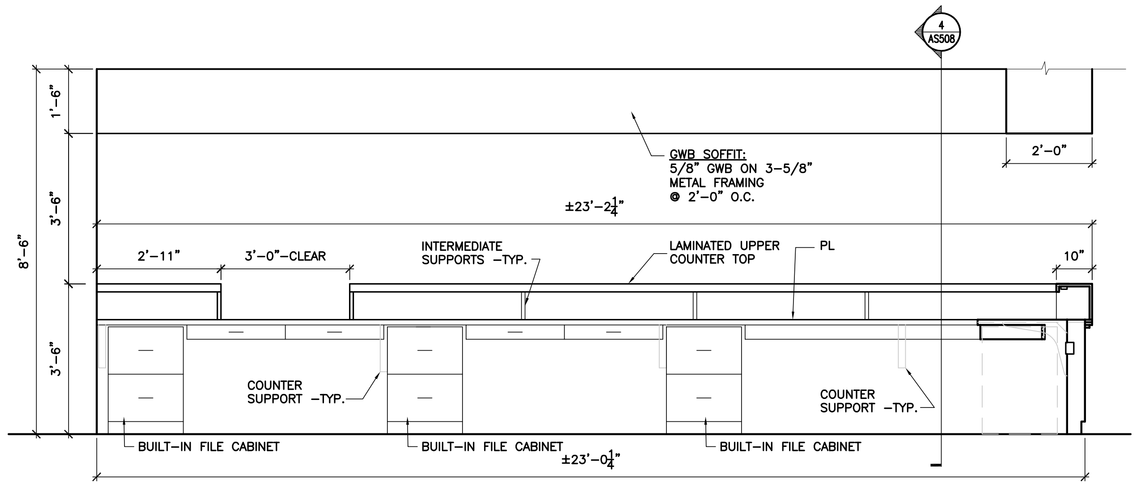


3 NURSES STATION ELEVATION - REAR
1/2"=1'-0"

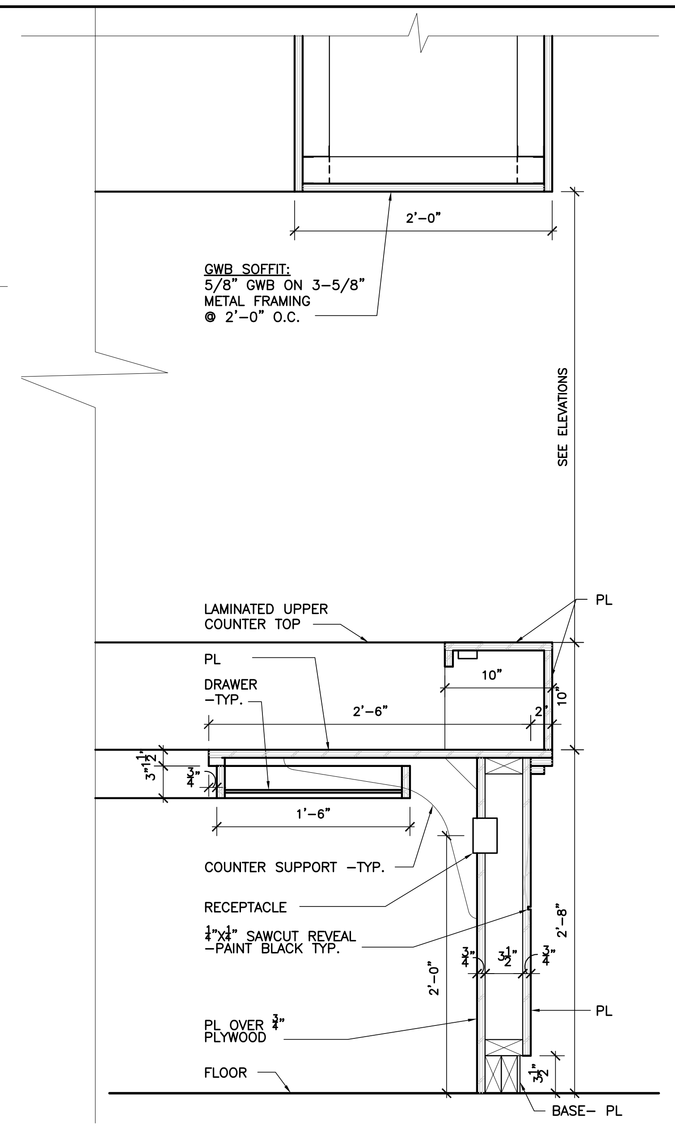


4 NURSES STATION SECTION
1-1/2"=1'-0"

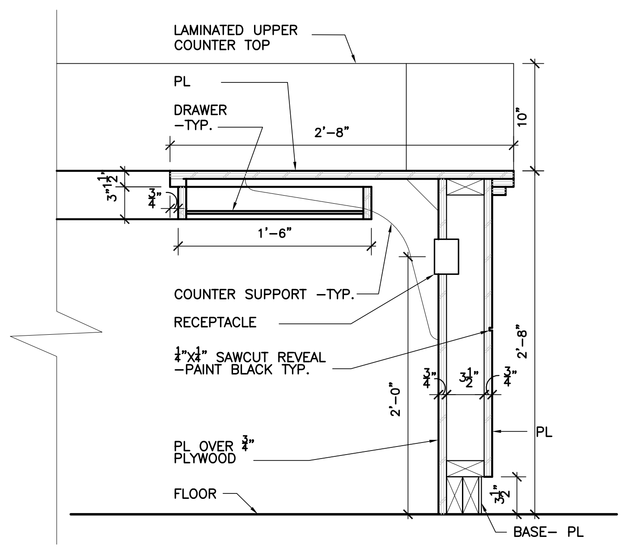


5 NURSES STATION SECTION-ABA
1-1/2"=1'-0"

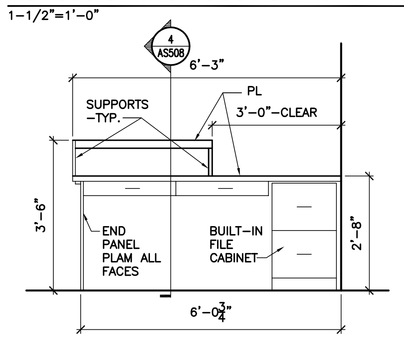


6 NURSES STATION ELEVATION - REAR
1/2"=1'-0"

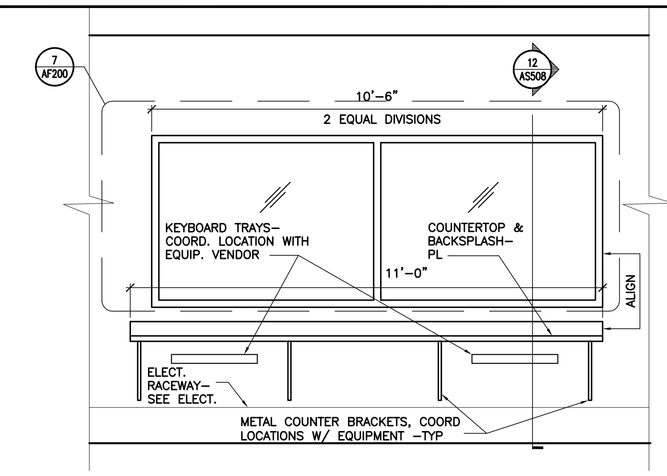


7 CONTROL ROOM ELEVATION
1/2"=1'-0"

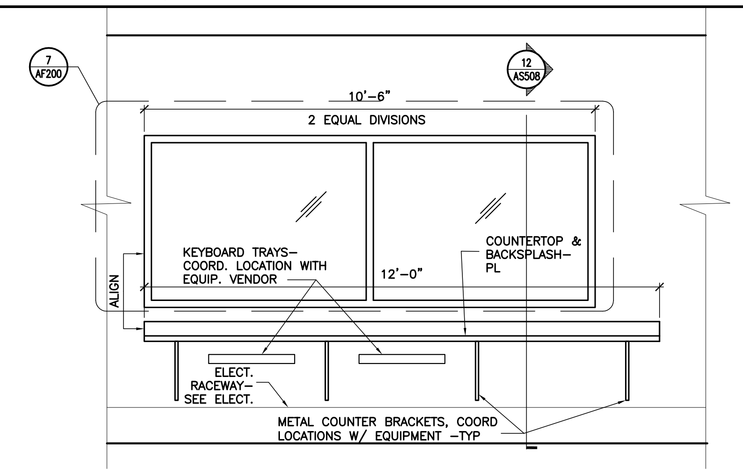


8 CONTROL ROOM ELEVATION
1/2"=1'-0"

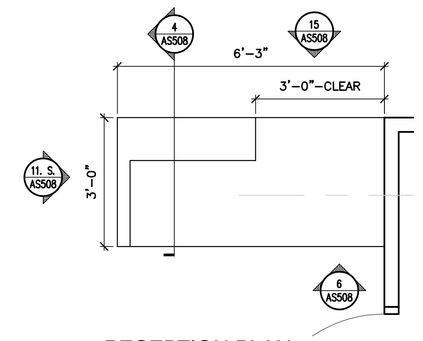


9 RECEPTION PLAN
1/2"=1'-0"

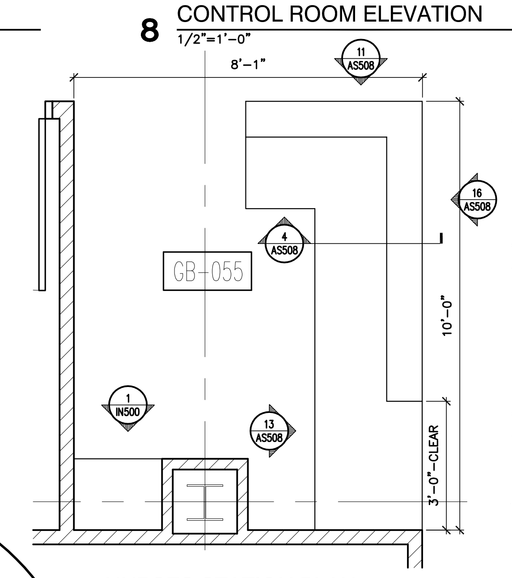


10 NURSES STATION PLAN
1/2"=1'-0"

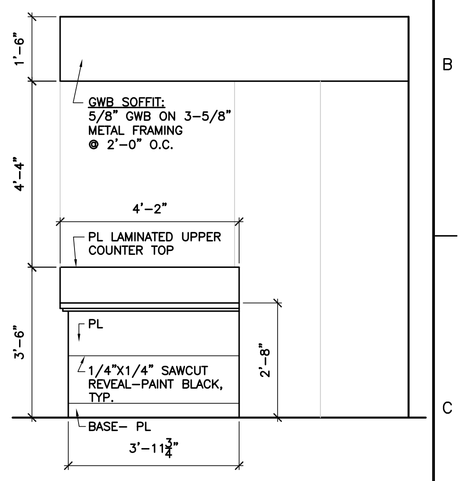


11 NURSES STATION ELEVATION
1/2"=1'-0"

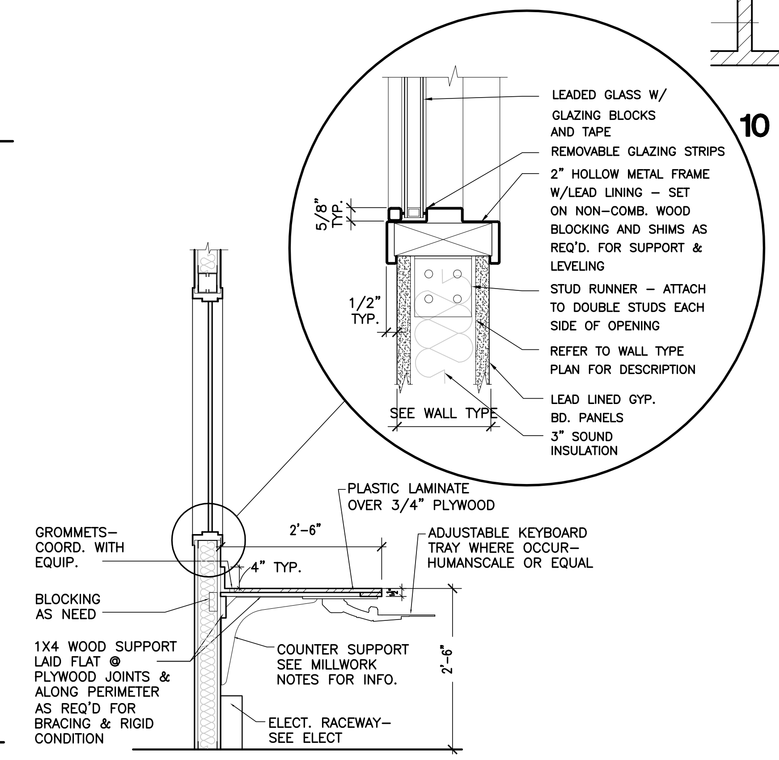


12 CONTROL ROOM SECTION
3/4"=1'-0"

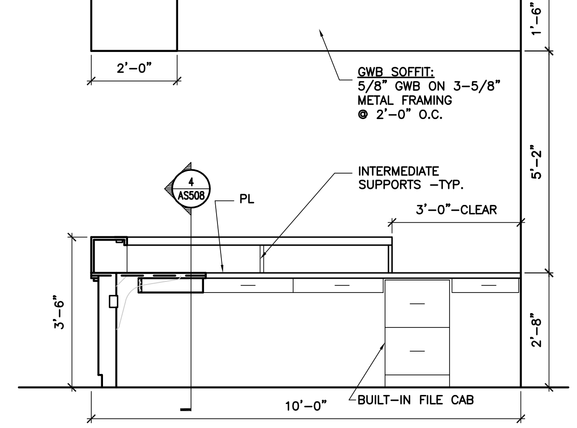


13 NURSE STATION ELEVATION-REAR
1/2"=1'-0"

14 NOT USED

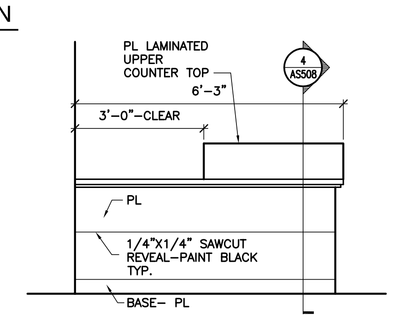


15 NURSES STATION ELEVATION - FRONT
1/2"=1'-0"

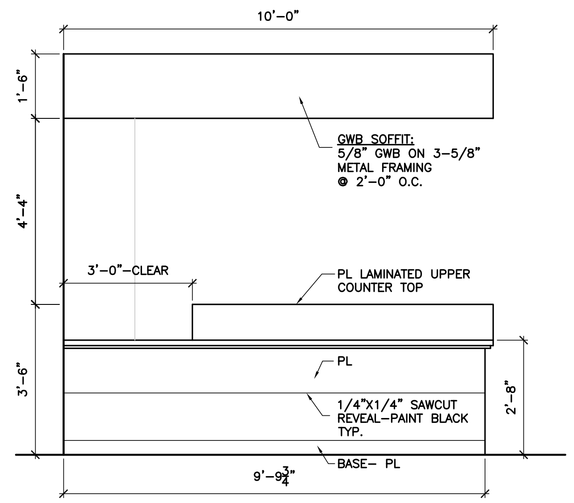


16 NURSES STATION ELEVATION-FONT
1/2"=1'-0"

# 04-18-12 MEDICAL EQUIPMENT AND INTERIOR DESIGN REVISIONS

| REVISION | DATE |
|---|---|
| 65% SUBMITTAL | 02/19/11 |
| 95% SUBMITTAL | 03/29/11 |
| 100% SUBMITTAL | 04/13/11 |
| CORPS/PROJECT REVIEW COMMENTS | 06/02/11 |
| 1 Clarifications to Bid Options- ADDENDUM #4 | 11/09/11 |
| MEDICAL EQUIPMENT AND INTERIOR DESIGN REVISIONS | 04/18/12 |

CONSULTANTS:

ARCHITECT/ENGINEERS:

ttv architects, inc.
110 EAST BIDWELL
JACKSONVILLE, FLORIDA 32202
T 904.798.8333
F 904.798.8335
www.ttvarch.com
FL Lic #AA0002609

Drawing Title: INTERIOR ELEVATIONS

Approved: Project Director

Project Title: SPECIALTY TREATMENT EXPANSION PROJECT- BUILDING #1

Location: JAMES A. HALEY VETERANS' HOSPITAL

Date: 02/19/11 | Checked: TTV | Drawn: TAG

Project Number: 673-CSI-100

Building Number: 1

Drawing Number: AS508

Dwg. 27 of 40

Office of Construction and Facilities Management

Department of Veterans Affairs

VA FORM 08-6231

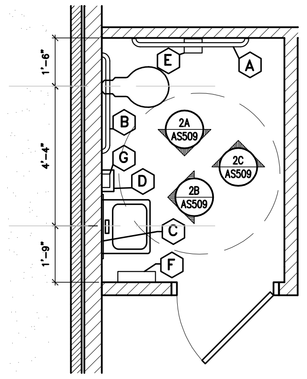


## TOILET ROOM ACCESSORIES

| | |
|---|---|
| A | GRAB BAR (42") |
| B | GRAB BAR (36") |
| C | METAL FRAMED MIRROR |
| D | PAPER TOWEL DISPENSER |
| E | TOILET TISSUE DISPENSER |
| F | STAINLESS STEEL SHELF |
| G | SOAP DISPENSER |

N

**1** TYP. ENLARGED RESTROOM PLAN
3/8"=1'-0"

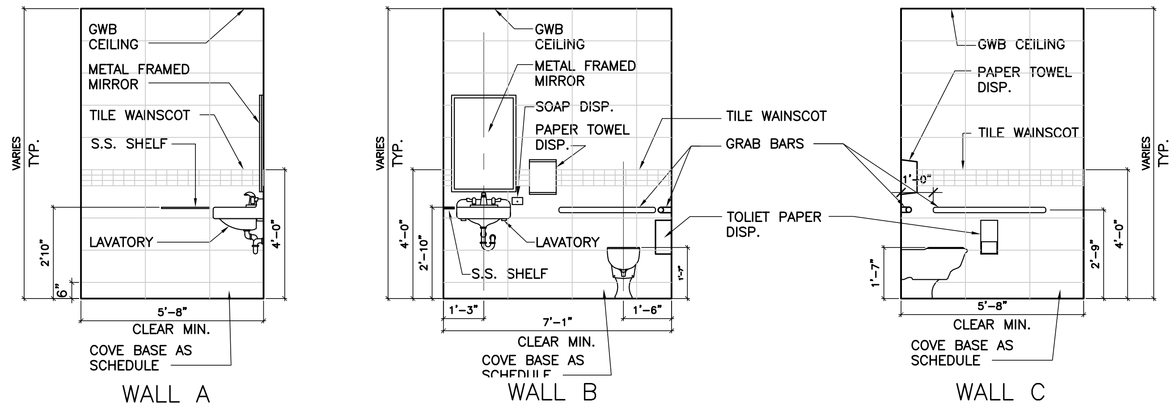


**2** TYP. RESTROOM INTERIOR ELEVATIONS
3/8"=1'-0"

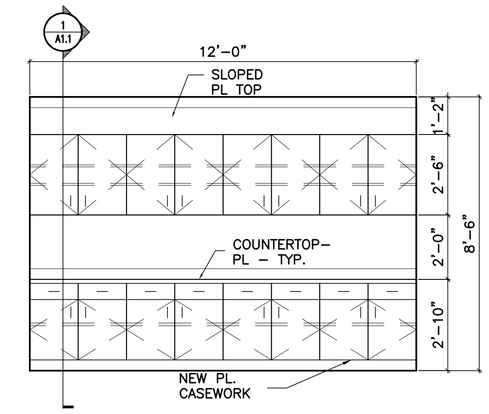


**8** CONFERENCE - MILLWORK ELEVATION
3/8"=1'-0"

## GENERAL MILLWORK NOTES:

1. CABINET WORK SHALL COMPLY WITH AWI SECTION 400 PREMIUM GRADE
2. FIELD VERIFY ALL MILLWORK DIMENSIONS BEFORE FABRICATION.
3. PROVIDE BLOCKING FOR MILLWORK AS REQ'D FOR RIGID CONDITION.
4. PROVIDE COUNTER SUPPORTS AS REQ'D FOR RIGID CONDITION–VERIFY W/ OWNER PROVIDED EQUIP.
5. ALL CABINET DOORS TO BE FULL OVERLAY W/ BLUM "CLIP" 170 HINGES.
6. ALL VISIBLE MILLWORK SURFACES SHALL RECEIVE PLASTIC LAMINATE, TYPICAL.
7. ALL MILLWORK SURFACES SHALL RECEIVE PLASTIC LAMINATE AS SPECIFIED, ON 3/4" PLYWOOD UNLESS OTHERWISE NOTED.
8. TYPICAL CABINET CONSTRUCTION SHALL BE FLUSH OVERLAY CONSTRUCTION.
9. ALL FASTENERS SHALL BE CONCEALED
10. FIELD INSTALL GROMMET HOLES IN ALL CABINETS FOR ELECTRICAL CORDS. ALL HOLES SHALL BE 2 1/2" DIA. ALL GROMMET HOLES SHALL RECEIVE PLASTIC TRIMS. LOCATIONS AND GROMMET HOLES SHALL BE DETERMINED BY OWNER.
11. COUNTER BRACKET SUPPORTS: REFER TO DWGS FOR LOCATION– SIZE 18"H X 24" W STEEL, BLACK POWDERCOAT
12. CONTRACTOR TO FIELD VERIFY ALL RELEVANT EXISTING DIMENSIONS AND CONDITIONS PRIOR TO FABRICATION OF BUILT–IN CABINETRY, TYP.
13. SUBMIT SHOP DRAWINGS SHOWING LOCATION OF EACH ITEM, DIMENSIONS OF PLANS AND ELEVATIONS, LARGE SCALE DETAILS, ATTACHMENT DEVICES AND OTHER COMPONENTS
14. COORDINATE ALL MILLWORK WITH PLUMBING, ELECTRICAL EQUIPMENT AND PIPING AS REQ'D. FOR FULLY OPERATIONAL CONDITION.
15. PROVIDE NEW KEYBOARD TRAYS WHERE INDICATED TO BE EQUAL TO HUMANSCALE 400G SERIES.

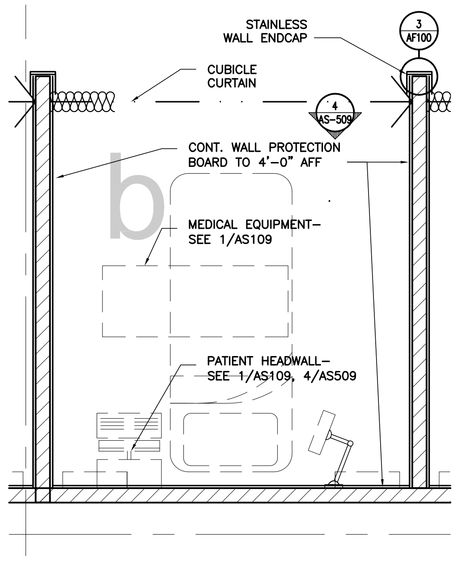


**3** TYP. HOLDING CUBICLE
1/2"=1'-0"

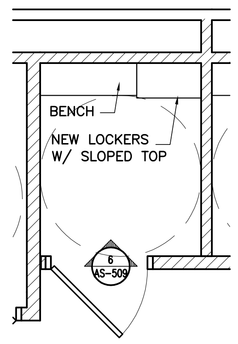


**5** TYP. CHANGING ROOM PLAN
3/8"=1'-0"

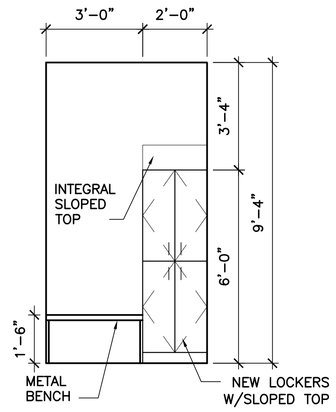


**6** TYP. CHANGING ROOM ELEVATION
3/8"=1'-0"

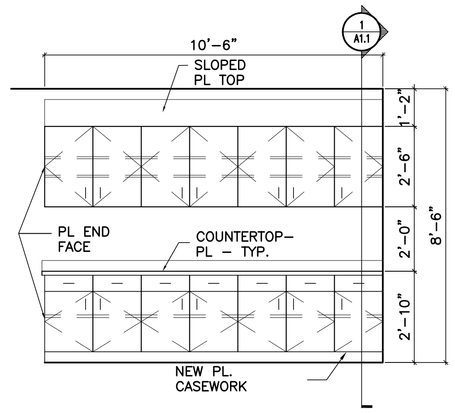


**7** ANGIO ROOM 2 - MILLWORK ELEVATION
3/8"=1'-0"

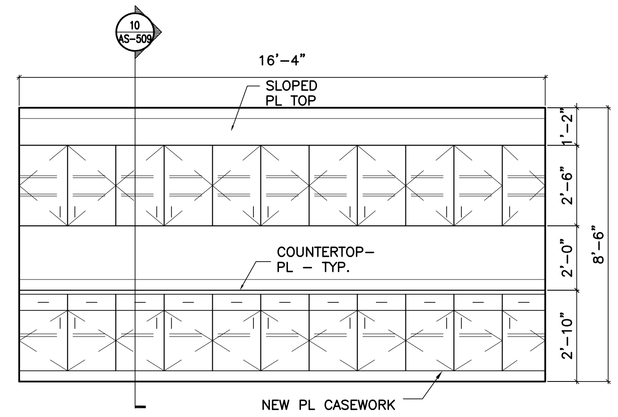


**9** BI PLANE ANGIO ROOM 1 - MILLWORK ELEVATION
3/8"=1'-0"

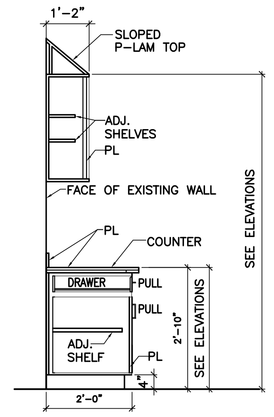


**10** TYP. MILLWORK SECTION
1/2"=1'-0"

QTY. REQ'D: 20-SETS
SET = 1 LEFT MODULE
1 RIGHT MODULE

SERIAL NO. 10013–0000–01 TO –40
ROOM NO.

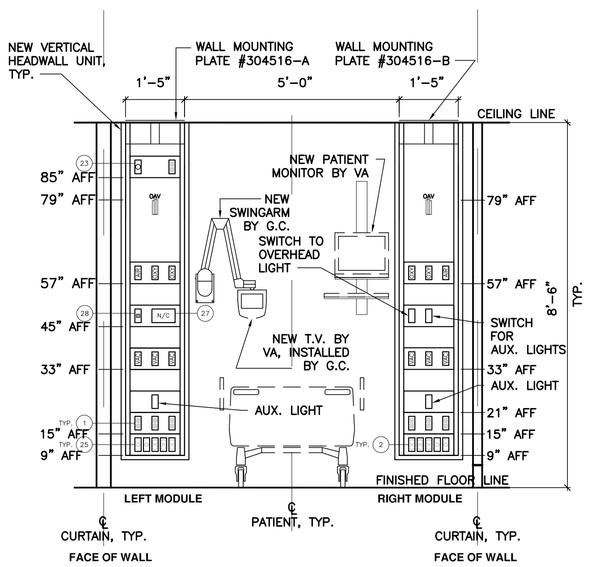


**4** TYP. PREFABRICATED PATIENT CARE HEADWALL
1/2"=1'-0"

| CEILING HEIGHT: 108" (8'–6") WIRING DIAGRAM: | MEDICAL GAS OUTLETS |
|---|---|
| LAMINATE COLOR | |
| HPL MANUFACTURER: FORMICA COLOR: WHEAT SAND 6212–58 MATTE | |
| NURSE CALL PATIENT STATION | NOTE: ALL MEDICAL GAS OUTLETS FURNISHED BY OTHERS MUST BE OF CONSOLE TYPE |
| MANUFACTURER: RAULAND–BORG MODEL NUMBER: NCBSS1 | |
| CODE BLUE | PIPE SIZES "TYPE L" / REGULATORY AGENCY APPROVAL |
| MANUFACTURER: RAULAND–BORG MODEL NUMBER: NCDPB2 | OXY 1/2" NOM. AIR 1/2" NOM. VAC 3/4" NOM. ASTM B819 / U.L. LISTED |
| | |
| NOTE: CIRCUIT IDENTIFICATION (PANEL & CIRCUIT NUMBER) ON COVERPLATE OF POWER RECPETACLES IF REQUIRED SHALL BE DONE IN THE FIELD BY OTHERS. FOR AN ADDITIONAL CHARGE, HOSPITAL SYSTEMS WILL ENGRAVE THE COVERPLATES WITH CIRCUIT I.D. | |

| GENERAL NOTES |
|---|
| BASIC FRAME IS CONSTRUCTED OF DEEP ETCHED, CLEAR ANODIZED EXTRUDED ALUM. |
| FASCIA IS FINISHED WITH HIGH PRESSURE PLASTIC LAMINATED TO ALUMINUM BACKER, HELD BY MACHINE SCREWS CONCEALED BY GRAY PLASTIC VINYL TRIM. |
| UNIMOUNT™ ACCESSORY TRACKS ARE INTEGRAL ON BOTH SIDES OF THE UNIT. |
| SPECTRUM DURACORE ACCESS PANELS ARE FABRICATED FROM 3/8" THICK FIRE–RETARDANT PARTICLE BOARD, LAMINATED ON BOTH SIDES. LAMINATE COLOR AS SPECIFIED BY ARCHITECT/OWNER. |
| MEDICAL GAS SERVICE CONNECTIONS AND ELECTRICAL/COMMUNICATION TERMINATIONS SHALL BE THROUGH THE TOP OF THE UNIT |

## LEGEND

| ITEM | DESCRIPTION | QTY |
|---|---|---|
| OXY | OXYGEN OUTLET | 4 |
| AIR | AIR OUTLET | 2 |
| VAC | VACUUM OUTLET | 6 |
| | | |
| 1 | RECEPT., DUPLEX, EMERG., RED, ILLUM. | 7 |
| 2 | RECEPTACLE, DUPLEX, NORMAL, IVORY | 6 |
| 23 | MONITOR JACK, CAT–5, RJ–45 (1G) | 1 |
| 25 | DATA JACK, CAT–5, RJ–45 (1G) | 4 |
| 27 | PROVISION FOR NURSE CALL (3G) | 1 |
| 28 | PROVISION FOR CODE BLUE (1G) | 1 |
| | PATIENT TELEPHONE JACK | 1 |
| | CABLE T.V. JACK | 1 |
| | | |

## ACCESSIBLE MOUNTING HEIGHTS

NOTE: MOUNTING HEIGHTS ARE FOR HANDICAPPED ACCESSIBLE FIXTURES ONLY. FOR STANDARD MOUNTING HEIGHTS, USE MANUFACTURER'S RECOMMENDATIONS.

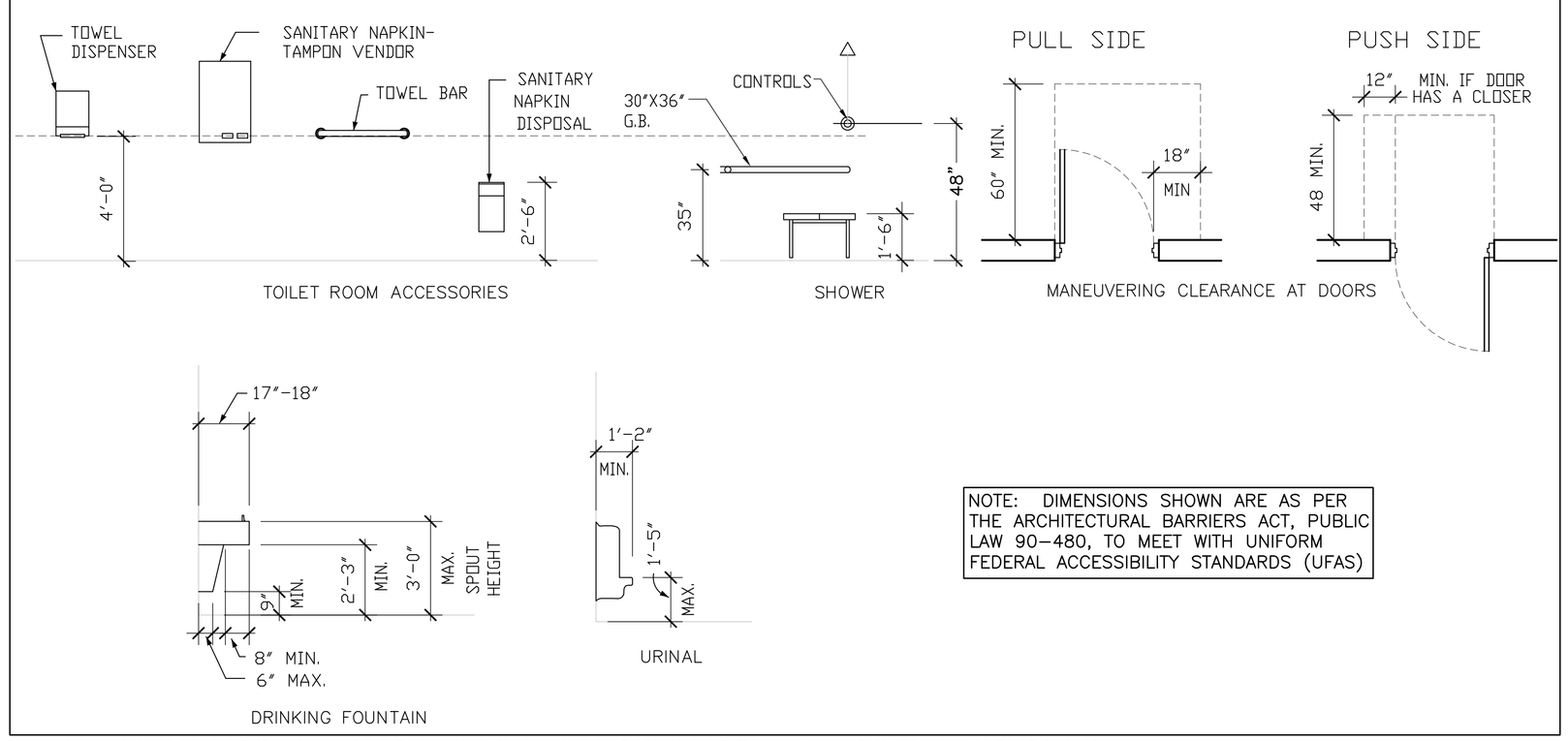


NOTE: DIMENSIONS SHOWN ARE AS PER THE ARCHITECTURAL BARRIERS ACT, PUBLIC LAW 90–480, TO MEET WITH UNIFORM FEDERAL ACCESSIBILITY STANDARDS (UFAS)

**04-18-12 MEDICAL EQUIPMENT AND INTERIOR DESIGN REVISIONS**

| REVISION | DATE |
|---|---|
| 65% SUBMITTAL | 02/19/11 |
| 95% SUBMITTAL | 03/29/11 |
| 100% SUBMITTAL | 04/13/11 |
| CONSTRUCTION SET | 05/02/11 |
| 1 Clarifications to Bid Options- ADDENDUM #4 | 11/09/11 |
| MEDICAL EQUIPMENT AND INTERIOR DESIGN REVISIONS | 04/18/12 |

CONSULTANTS:

ARCHITECT/ENGINEERS:

ttv architects, inc.
110 EAST FOREPAUGH
JACKSONVILLE, FLORIDA 32202
T 904.798.8333
F 904.798.8335
www.ttvarch.com
FL Lic#AA0002609

Drawing Title: TYP. RESTROOM MILLWORKS

Approved: Project Director

Project Title: SPECIALTY TREATMENT EXPANSION PROJECT- BUILDING #1

Location: JAMES A. HALEY VETERANS' HOSPITAL

Date: 02/19/11 | Checked: TTV | Drawn: TAG

Project Number: 673-CSI-100

Building Number: 1

Drawing Number: AS509

Dwg. 28 of 40

Office of Construction and Facilities Management

Department of Veterans Affairs

VA FORM 08–6231

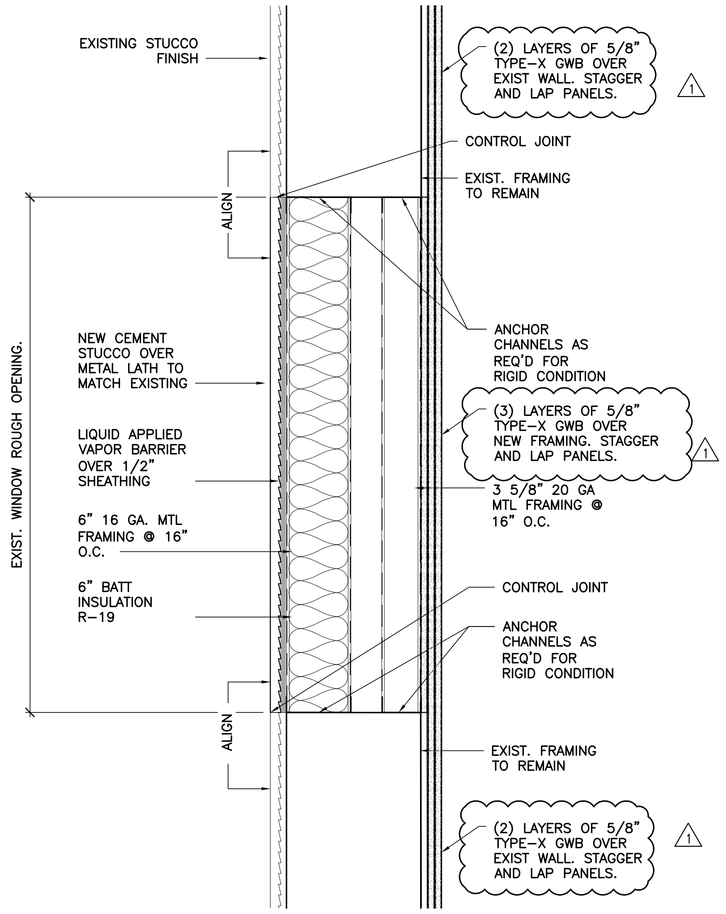


**1 RTU CORRIDOR WINDOW INFILL**
1 1/2"=1'-0"

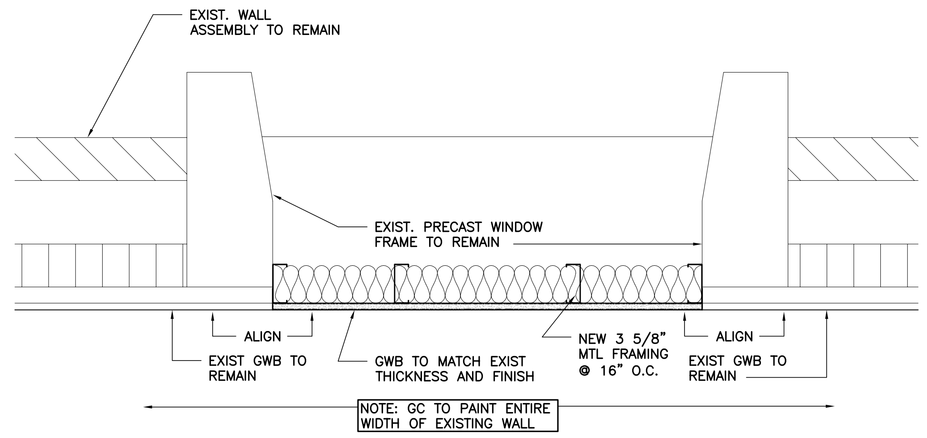


**2 BUILDING #1 TYPICAL WINDOW INFILL DETAIL**
1 1/2"=1'-0"

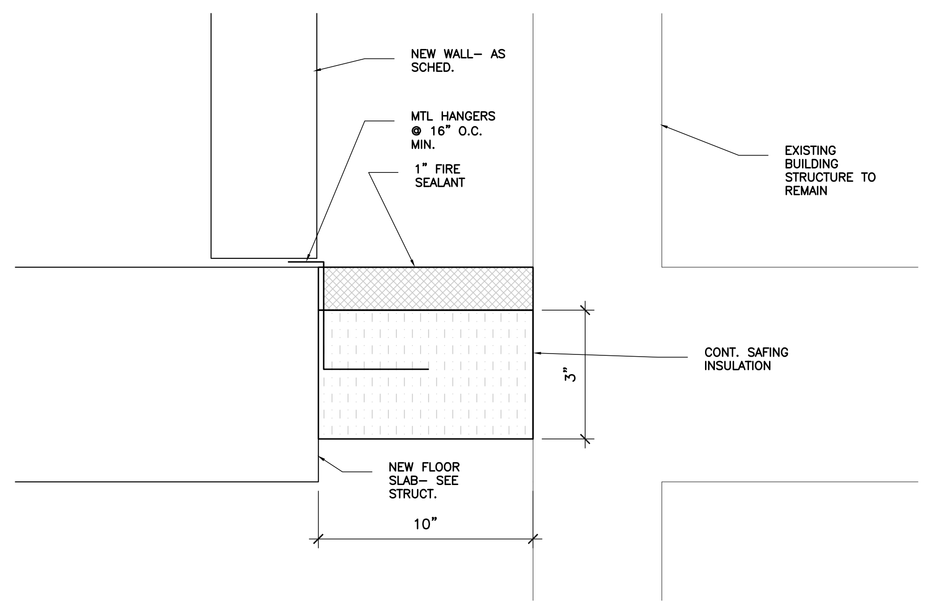


**3 TYPICAL SAFING INSULATION DETAIL**
6"=1'-0"

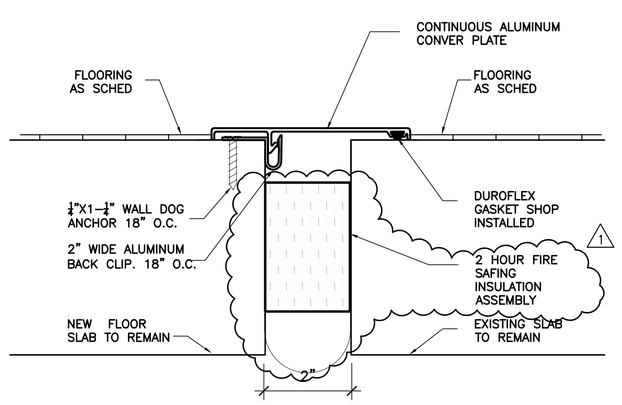


FLOOR-FLOOR EXPANSION JOINT

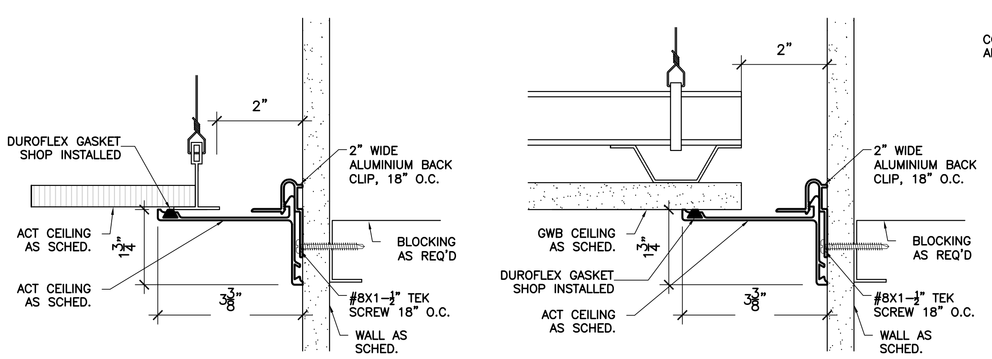


WALL-ACT CEILING EXPANSION JOINT

WALL-GWB CEILING EXPANSION JOINT

WALL-WALL EXPANSION JOINT

**4 TYPICAL INTERIOR EXPANSION JOINT DETAILS**
6"=1'-0"

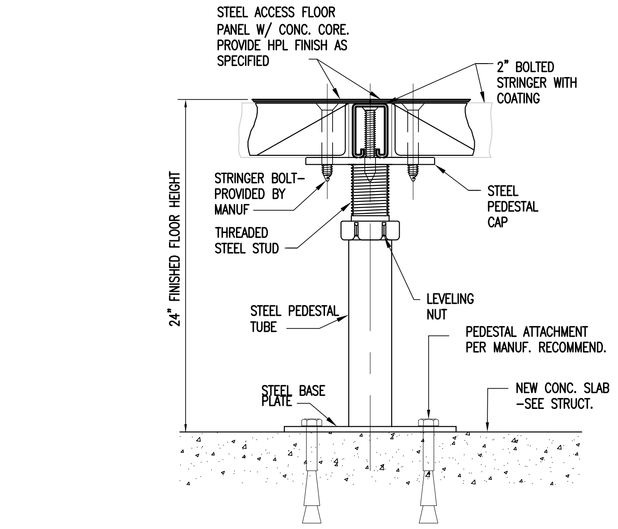


TYPICAL SECTION AT FIELD

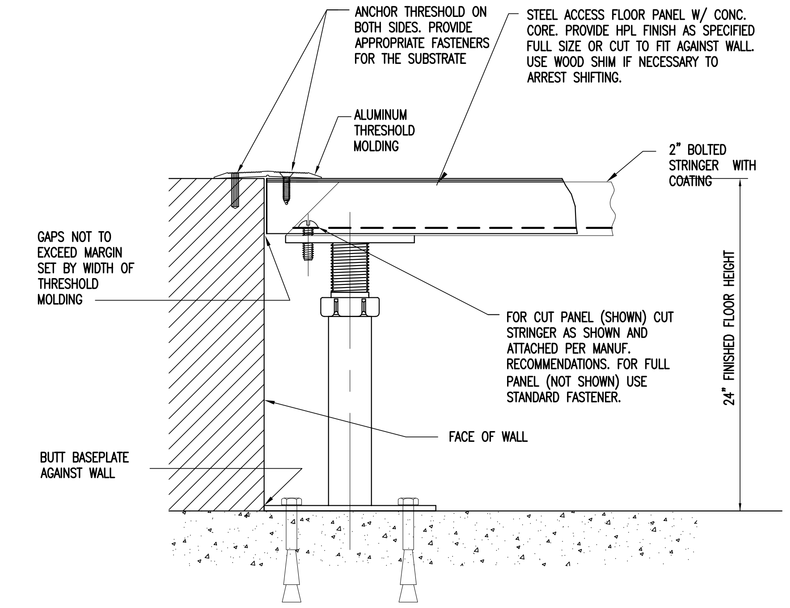


SECTION AT CURB

INSTRUCTIONS FOR FULL PANEL

1. ORDER A 4' STRINGER FOR A 2' FASCIA CONDITION
2. CUT STRINGER TO 23-1/2"
3. BAND SAW STRINGER SIDES BACK 1/2"
4. BEND STRINGER SIDES BACK TO 90 DEG WITH PLIERS.
5. DRILL 9/16" HOLE IN TOP OF STRINGER
6. ATTACH STRINGER TO PEDESTAL HEAD WITH 1/4 - 20 PAN HEAD SCREW.

INSTRUCTIONS FOR CUT PANEL

SAME AS ABOVE BUT USE STANDARD STRINGER

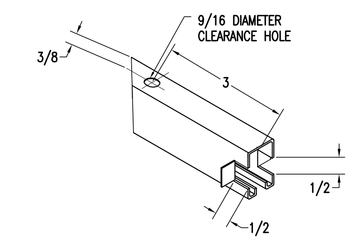


STRINGER CUTTING INSTRUCTIONS FOR PANEL RESTRAINT

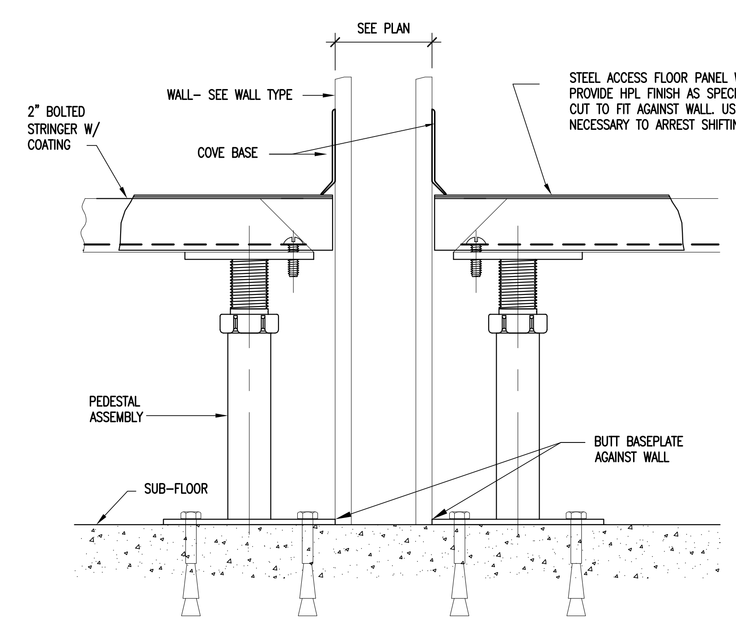


SECTION AT THRU WALL

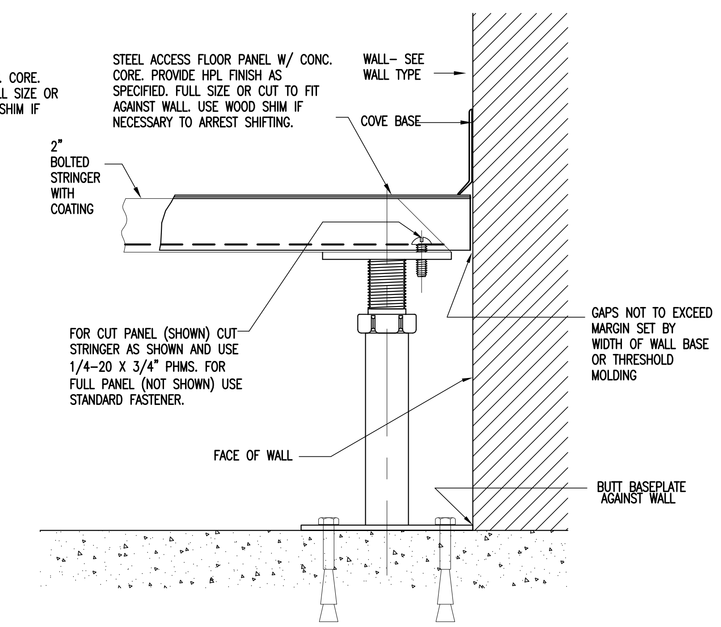


SECTION AT EXTERIOR WALL

**5 TYPICAL RAISED FLOOR DETAILS**
6"=1'-0"

## 04-18-12 MEDICAL EQUIPMENT AND INTERIOR DESIGN REVISIONS

| REVISION | DATE |
|---|---|
| 65% SUBMITTAL | 02/19/11 |
| 95% SUBMITTAL | 03/29/11 |
| 100% SUBMITTAL | 04/13/11 |
| CONSTRUCTION SET | 05/02/11 |
| 1 Clarifications to Bid Options- ADDENDUM #4 | 11/09/11 |
| MEDICAL EQUIPMENT AND INTERIOR DESIGN REVISIONS | 04/18/12 |

CONSULTANTS:

ARCHITECT/ENGINEERS:

ttv architects, inc.
110 EAST FORSYTH ST
JACKSONVILLE, FLORIDA 32202
T 904.798.5333
F 904.798.5335
www.ttvarch.com
FL Lic.#AA0002609

Drawing Title: MISC. DETAILS

Approved Project Director

Project Title: SPECIALTY TREATMENT EXPANSION PROJECT- BUILDING #1

Location: JAMES A. HALEY VETERANS' HOSPITAL

Date: 02/19/11 | Checked: TTV | Drawn: TAG

Project Number: 673-CSI-100

Building Number: 1

Drawing Number: AS510

Dwg. 29 of 40

Office of Construction and Facilities Management

Department of Veterans Affairs

VA FORM 08-6231

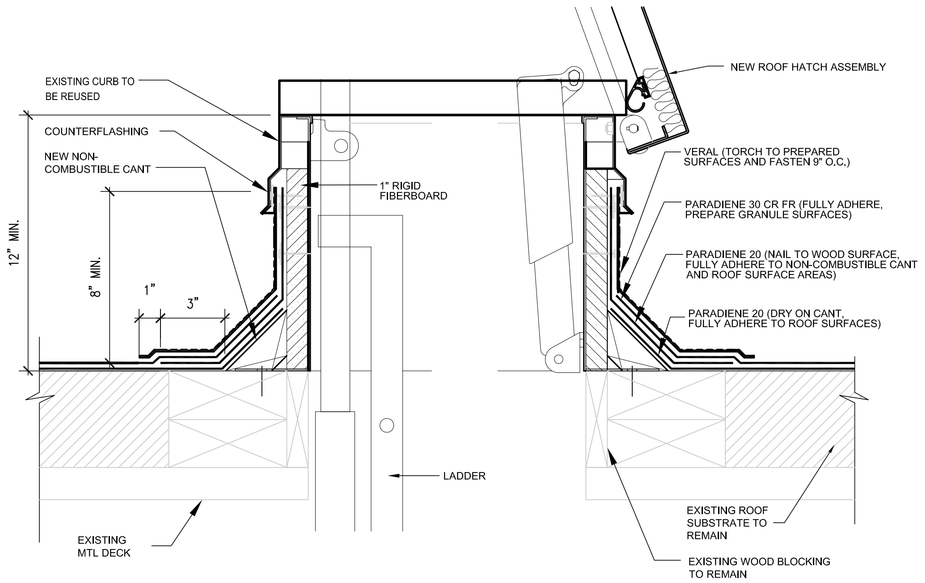


## 1 ROOF HATCH DETAIL
3"=1'-0"

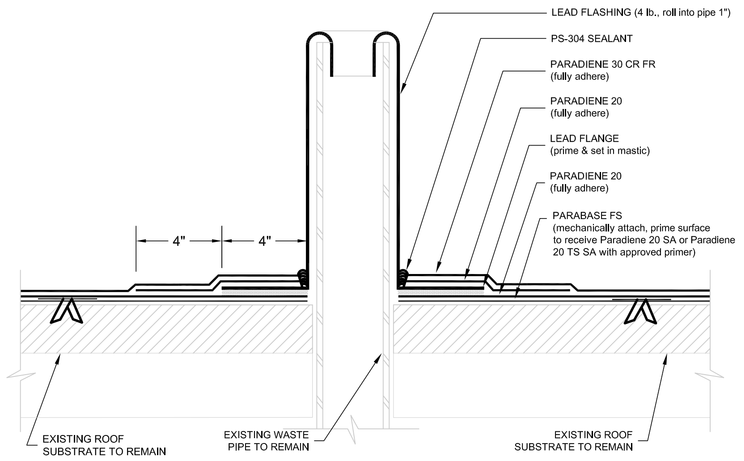


NOTES: 1. PA-1021 PLASTIC CEMENT AND PA-1125 PRIMER ARE REQUIRED WHERE MASTIC AND PRIMER ARE INDICATED.
2. THE CARPENTRY AND METAL WORK SHOWN DEPICT SHOP FABRICATION AND JOB-SITE ASSEMBLY. THESE COMPONENTS SHOULD BE DESIGNED/FABRICATED/INSTALLED ACCORDING TO GENERALLY ACCEPTED INDUSTRY PRACTICES, STANDARDS AND APPROVALS.
3. DISSIMILAR METAL TYPES SUBJECT TO ELECTROLYTIC REACTION SHOULD BE PHYSICALLY SEPARATED.
4. REQUIREMENTS AND RECOMMENDATIONS DETAILED IN SIPLAST MEMBRANE & SRIS SPECIFICATIONS SHALL APPLY IN ADDITION TO THE ABOVE DRAWING.

CAUTION: SIPLAST RECOMMENDS THAT ALL PRACTICES PERTAINING TO NRCA CERTA GUIDELINES BE FOLLOWED WHEN TORCHING METHODS ARE EMPLOYED. THIS INCLUDES PERFORMING A FIRE WATCH FOLLOWING ANY TORCH APPLICATIONS. ALWAYS HAVE APPROVED FIRE-EXTINGUISHING EQUIPMENT NEARBY.

## 4 TYPICAL WASTE STACK DETAIL
3"=1'-0"

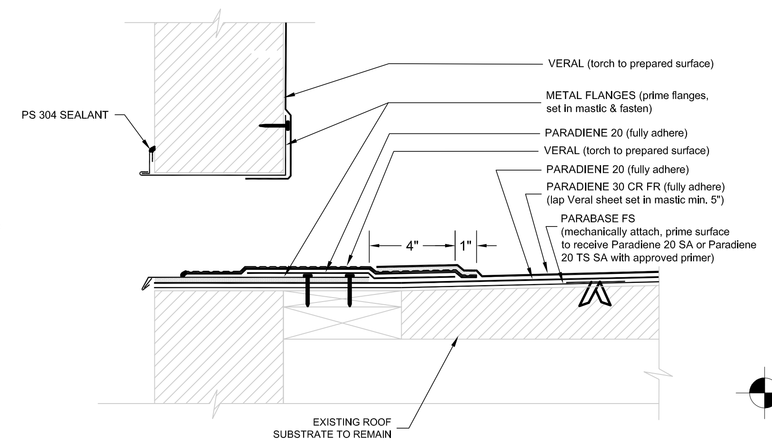


NOTES: 1. PREPARE GRANULE SURFACES UNDER VERAL FLASHING BY TORCH PREPARATION.
2. THE CARPENTRY SHOWN DEPICTS SHOP FABRICATION AND JOB-SITE ASSEMBLY. THESE COMPONENTS SHOULD BE DESIGNED/FABRICATED/INSTALLED ACCORDING TO GENERALLY ACCEPTED INDUSTRY PRACTICES, STANDARDS AND APPROVALS.
3. TAPER INSULATION AREAS AROUND THE SCUPPER OPENING TO ENSURE POSITIVE DRAINAGE.
4. DISSIMILAR METAL TYPES SUBJECT TO ELECTROLYTIC REACTION SHOULD BY PHYSICALLY SEPARATED.
5. REQUIREMENTS AND RECOMMENDATIONS DETAILED IN SIPLAST MEMBRANE AND SRIS SPECIFICATIONS SHALL APPLY IN ADDITION TO THE ABOVE DRAWING.

CAUTION: SIPLAST RECOMMENDS THAT ALL PRACTICES PERTAINING TO NRCA CERTA GUIDELINES BE FOLLOWED WHEN TORCHING METHODS ARE EMPLOYED. THIS INCLUDES PERFORMING A FIRE WATCH FOLLOWING ANY TORCH APPLICATIONS. ALWAYS HAVE APPROVED FIRE-EXTINGUISHING EQUIPMENT NEARBY.

## 7 TYPICAL SCUPPER DETAIL
3"=1'-0"

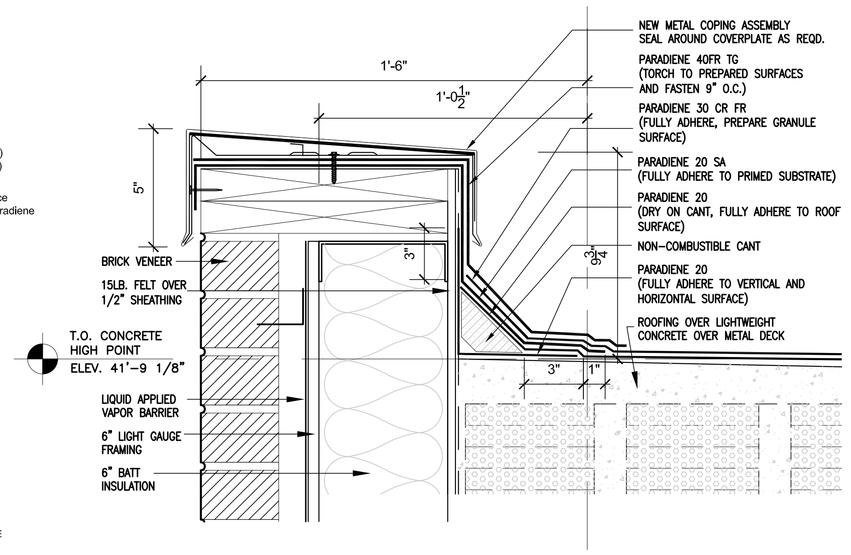


## 10 DETAIL-PARAPET
3"=1'-0"

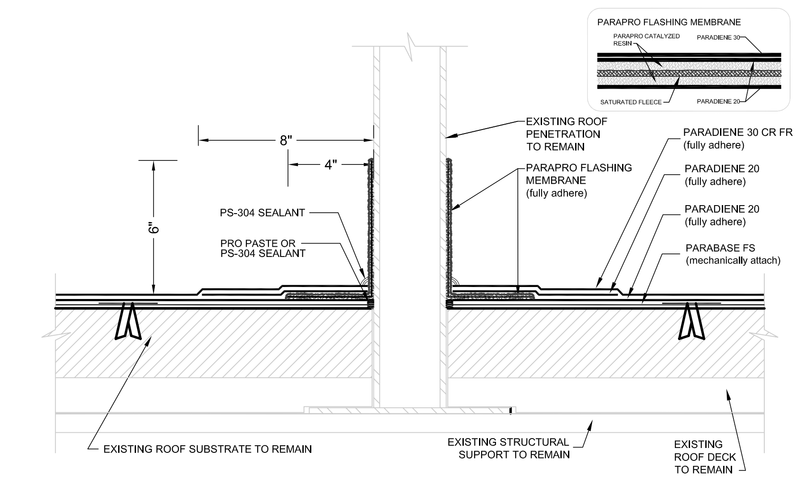


NOTES:
1. BEFORE APPLICATION OF PARAPRO FLASHING MEMBRANE, PRO PASTE OR PS-304 ELASTOMERIC SEALANT SHOULD BE USED TO FILL VOIDS WHERE ROOFING MEMBRANES TERMINATE AT PENETRATIONS.
2. REFER TO SIPLAST PREPARATION GUIDELINES FOR PROPER SURFACE TREATMENT OF ALL MATERIALS PRIOR TO APPLICATION OF PARAPRO FLASHING.
3. REQUIREMENTS AND RECOMMENDATIONS DETAILED IN PARAPRO INSTALLATION SPECIFICATIONS SHALL APPLY IN ADDITION TO THE ABOVE DRAWING.
4. PARAPRO CANNOT BE APPLIED OVER MEMBRANES CONTAINING PA-311 ADHESIVES OR OTHER MATERIALS CONTAINING UNCURED, SOLVENT-BASED MATERIALS. IN SUCH CASES, MEMBRANES TO BE COVERED WITH PARAPRO MUST BE ADHERED WITH PS-304 ELASTOMERIC SEALANT. CONTACT SIPLAST FOR INFORMATION.
5. REFER TO SIPLAST FLEECE CUTTING RECOMMENDATIONS FOR CONFIGURATIONS, CUTTING, FOLDING AND LAPPING TECHNIQUES.

## 2 TYPICAL SMALL PIPE PENETRATION DETAIL
3"=1'-0"

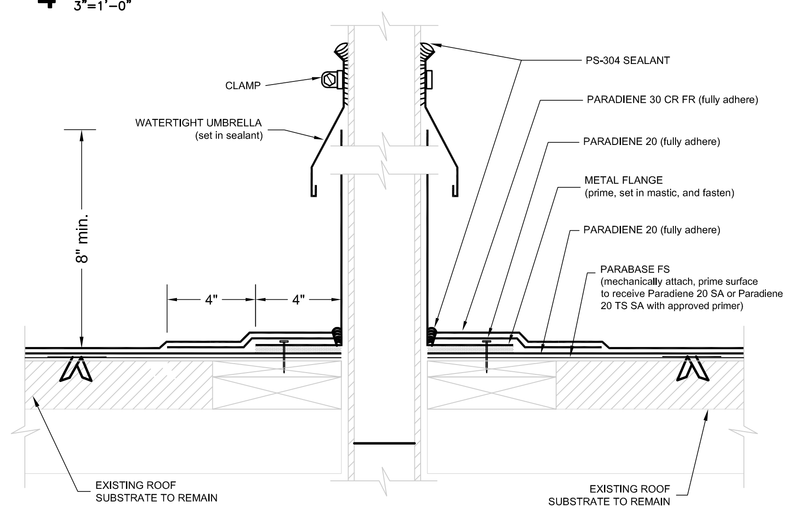


NOTES: 1. PA-1021 PLASTIC CEMENT AND PA-1125 PRIMER ARE REQUIRED WHERE MASTIC AND PRIMER ARE INDICATED.
2. THE CARPENTRY AND METAL WORK SHOWN DEPICT SHOP FABRICATION AND JOB-SITE ASSEMBLY. THESE COMPONENTS SHOULD BE DESIGNED/FABRICATED/INSTALLED ACCORDING TO GENERALLY ACCEPTED INDUSTRY PRACTICES, STANDARDS AND APPROVALS.
3. DISSIMILAR METAL TYPES SUBJECT TO ELECTROLYTIC REACTION SHOULD BE PHYSICALLY SEPARATED.
4. REQUIREMENTS AND RECOMMENDATIONS DETAILED IN SIPLAST MEMBRANE & SRIS SPECIFICATIONS SHALL APPLY IN ADDITION TO THE ABOVE DRAWING.

CAUTION: SIPLAST RECOMMENDS THAT ALL PRACTICES PERTAINING TO NRCA CERTA GUIDELINES BE FOLLOWED WHEN TORCHING METHODS ARE EMPLOYED. THIS INCLUDES PERFORMING A FIRE WATCH FOLLOWING ANY TORCH APPLICATIONS. ALWAYS HAVE APPROVED FIRE-EXTINGUISHING EQUIPMENT NEARBY.

## 5 TYPICAL EQUIPMENT FRAME DETAIL
3"=1'-0"

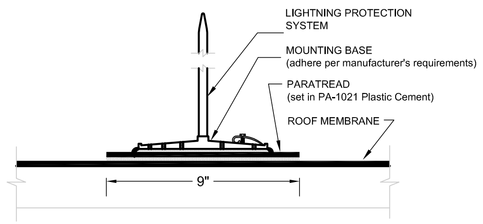


NOTES: 1. THE PARATREAD SHOULD BE INSTALLED BY A SIPLAST SELECT CONTRACTOR.
2. THE INSTALLATION OF THE LIGHTNING PROTECTION SYSTEM SHALL FOLLOW THE SPECIFICATIONS OF THE LIGHTNING PROTECTION SYSTEM MANUFACTURER AND THE SYSTEM SHALL BE CERTIFIED WHEN COMPLETE.
3. REQUIREMENTS AND RECOMMENDATIONS DETAILED IN SIPLAST SPECIFICATIONS SHALL APPLY IN ADDITION TO THE ABOVE DRAWING.

## 8 TYPICAL LIGHTNING PROTECTION DETAIL
3"=1'-0"

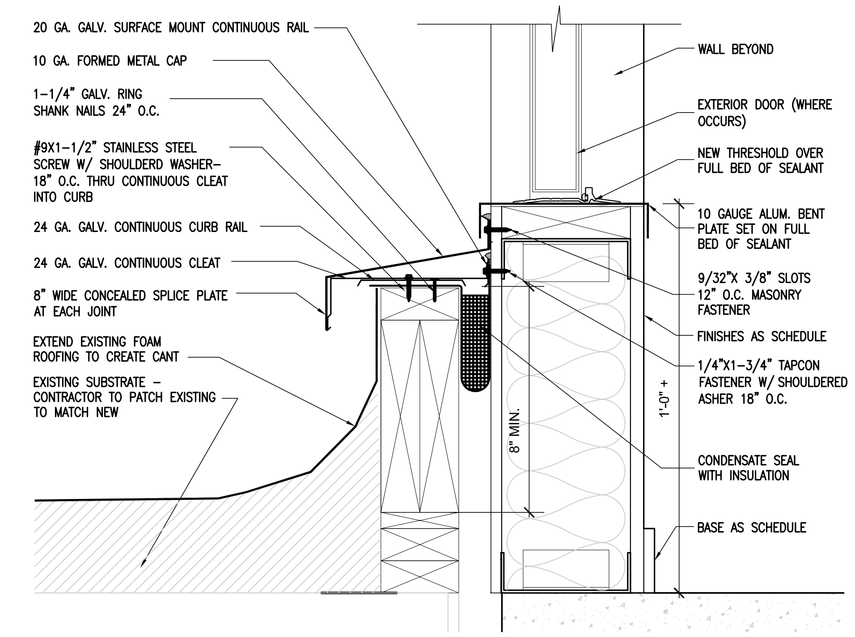


## 11 THRESHOLD DETAIL AT BLD 1 INTERFACE
3"=1'-0"

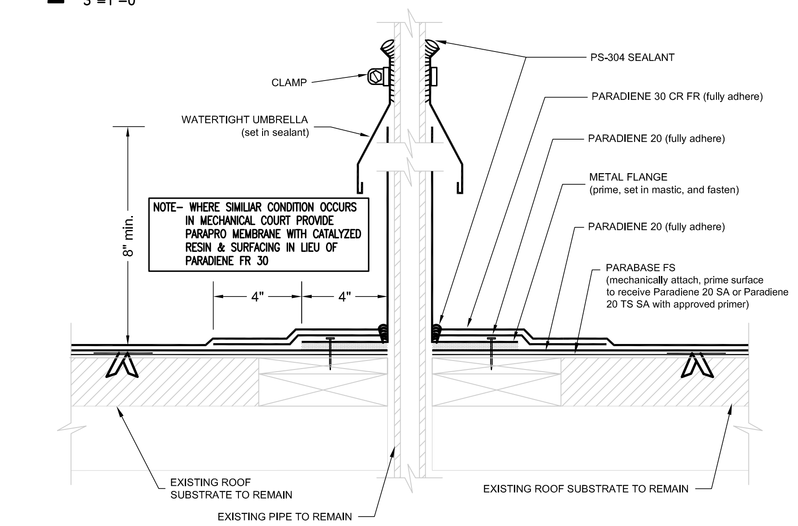


NOTES: 1. PA-1021 PLASTIC CEMENT AND PA-1125 PRIMER ARE REQUIRED WHERE MASTIC AND PRIMER ARE INDICATED.
2. THE CARPENTRY AND METAL WORK SHOWN DEPICT SHOP FABRICATION AND JOB-SITE ASSEMBLY. THESE COMPONENTS SHOULD BE DESIGNED/FABRICATED/INSTALLED ACCORDING TO GENERALLY ACCEPTED INDUSTRY PRACTICES, STANDARDS AND APPROVALS.
3. DISSIMILAR METAL TYPES SUBJECT TO ELECTROLYTIC REACTION SHOULD BE PHYSICALLY SEPARATED.
4. REQUIREMENTS AND RECOMMENDATIONS DETAILED IN SIPLAST MEMBRANE & SRIS SPECIFICATIONS SHALL APPLY IN ADDITION TO THE ABOVE DRAWING.

CAUTION: SIPLAST RECOMMENDS THAT ALL PRACTICES PERTAINING TO NRCA CERTA GUIDELINES BE FOLLOWED WHEN TORCHING METHODS ARE EMPLOYED. THIS INCLUDES PERFORMING A FIRE WATCH FOLLOWING ANY TORCH APPLICATIONS. ALWAYS HAVE APPROVED FIRE-EXTINGUISHING EQUIPMENT NEARBY.

## 3 TYPICAL PIPE PENETRATION DETAIL
3"=1'-0"

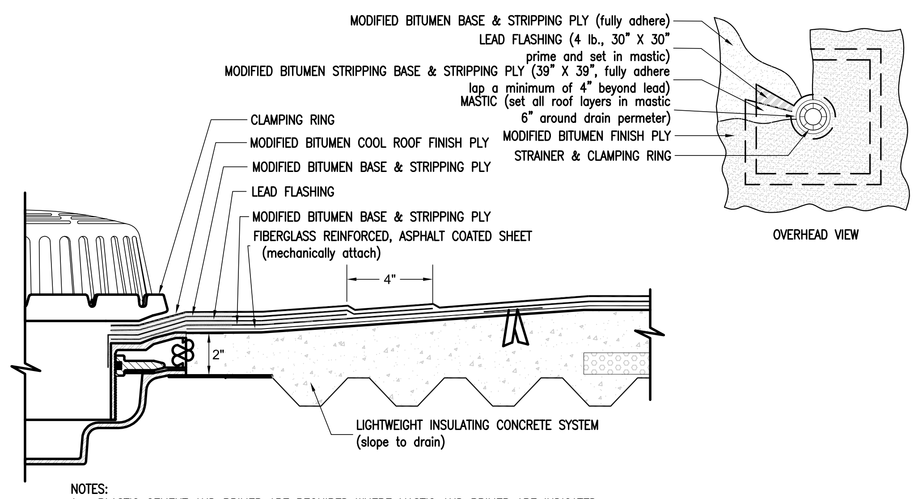


NOTES:
1. PLASTIC CEMENT AND PRIMER ARE REQUIRED WHERE MASTIC AND PRIMER ARE INDICATED.
2. ROOF DRAIN COMPONENTS AND INSTALLATION GUIDELINES ARE SUPPLIED BY THE DRAIN MANUFACTURER.
3. SHEATHING PAPER IS REQUIRED BENEATH THE BASE SHEET FOR ROOF SYSTEMS APPLIED IN ADHESIVE.
4. REQUIREMENTS AND RECOMMENDATIONS DETAILED IN MANUFACTURER'S ROOFING SPECIFICATIONS SHALL APPLY IN ADDITION TO THE ABOVE DRAWING.

## 6 TYPICAL DRAIN DETAIL
3"=1'-0"

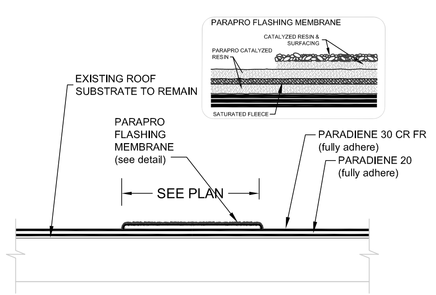


## 9 TYPICAL WALKING PAD DETAIL
3"=1'-0"

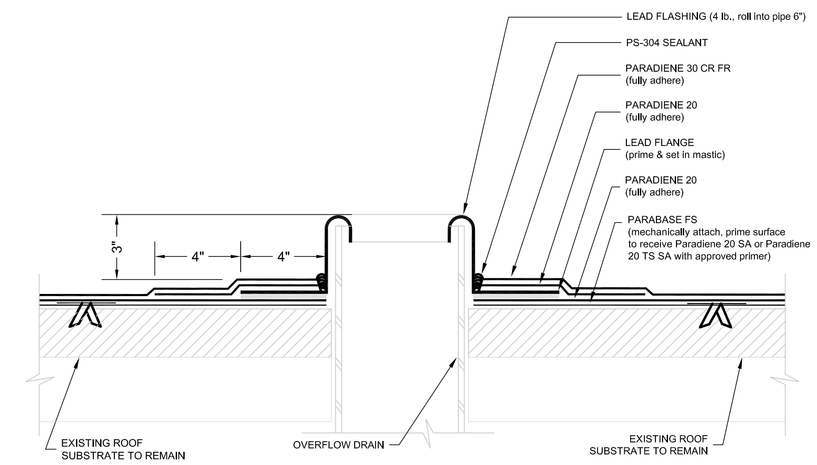


NOTES: 1. PA-1021 PLASTIC CEMENT AND PA-1125 PRIMER ARE REQUIRED WHERE MASTIC AND PRIMER ARE INDICATED.
2. REQUIREMENTS AND RECOMMENDATIONS DETAILED IN SIPLAST MEMBRANE & SRIS SPECIFICATIONS SHALL APPLY IN ADDITION TO THE ABOVE DRAWING.

CAUTION: SIPLAST RECOMMENDS THAT ALL PRACTICES PERTAINING TO NRCA CERTA GUIDELINES BE FOLLOWED WHEN TORCHING METHODS ARE EMPLOYED. THIS INCLUDES PERFORMING A FIRE WATCH FOLLOWING ANY TORCH APPLICATIONS. ALWAYS HAVE APPROVED FIRE-EXTINGUISHING EQUIPMENT NEARBY.

## 12 OVERFLOW DRAIN DETAIL
3"=1'-0"

**NOTE:**
**SIPLAST DETAILS ARE PROVIDED TO SERVE AS THE BASIS OF DESIGN.**

# 04-18-12 MEDICAL EQUIPMENT AND INTERIOR DESIGN REVISIONS

| REVISION | DATE |
|---|---|
| 65% SUBMITTAL | 02/19/11 |
| 95% SUBMITTAL | 03/29/11 |
| 100% SUBMITTAL | 04/13/11 |
| CONSTRUCTION SET | 05/02/11 |
| 1 Clarifications to Bid Options- ADDENDUM #4 | 11/09/11 |
| MEDICAL EQUIPMENT AND INTERIOR DESIGN REVISIONS | 04/18/12 |

CONSULTANTS:

ARCHITECT/ENGINEERS:

ttv architects, inc.
110 EAST BISCAYNE ST
JACKSONVILLE, FLORIDA 32202
T 904.798.8222
F 904.798.8335
www.ttvarch.com
FL Lic.#AA0002609

Drawing Title: ROOF DETAILS

Approved: Project Director

Project Title: SPECIALTY TREATMENT EXPANSION PROJECT- BUILDING #1

Location: JAMES A. HALEY VETERANS' HOSPITAL

Date: 02/19/11 | Checked: TTV | Drawn: TAG

Project Number: 673-CSI-100

Building Number: 1

Drawing Number: AS601

Dwg. 30 of 40

Office of Construction and Facilities Management

Department of Veterans Affairs

VA FORM 08-6231

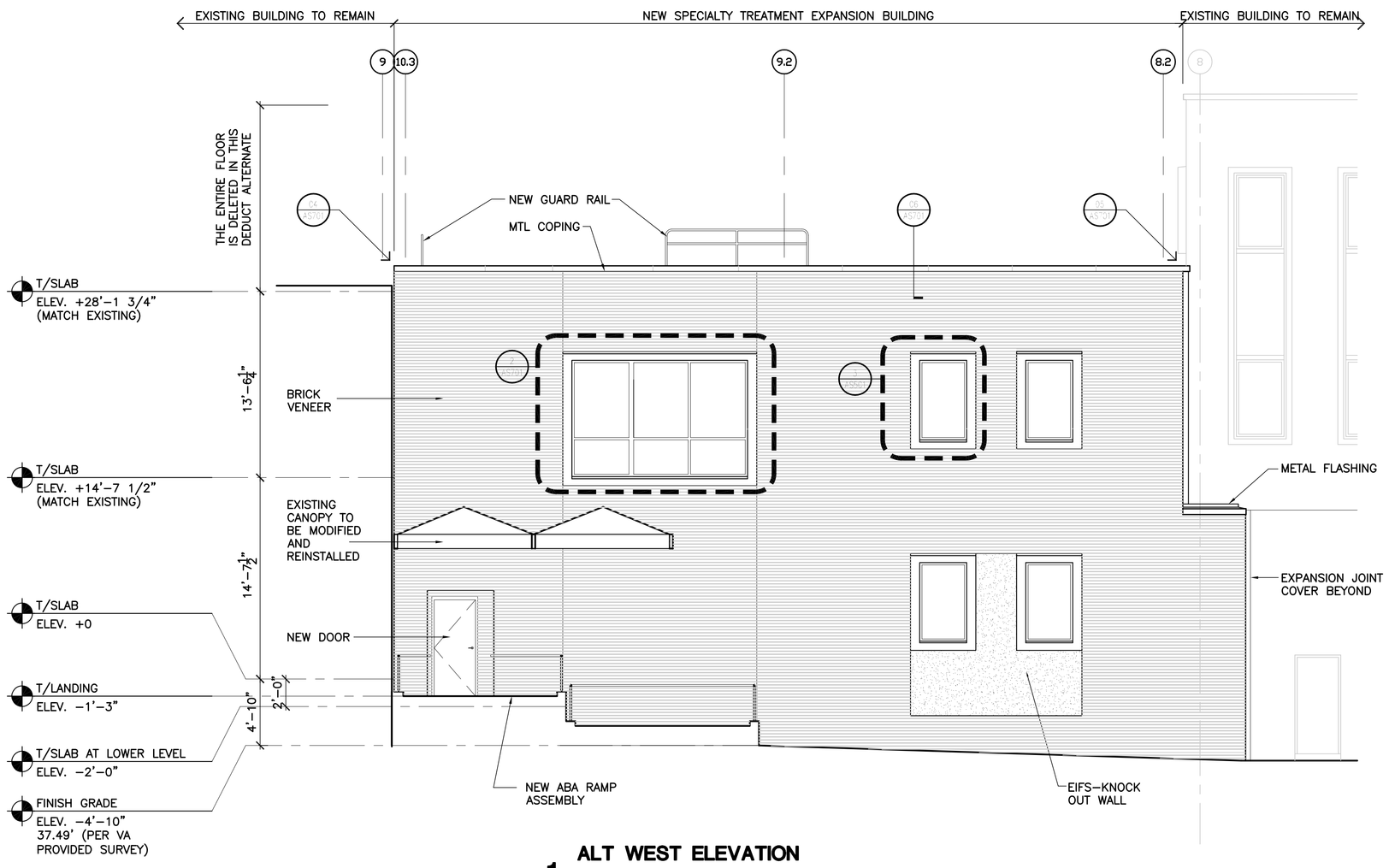


**1 ALT WEST ELEVATION**
3/16"=1'-0"

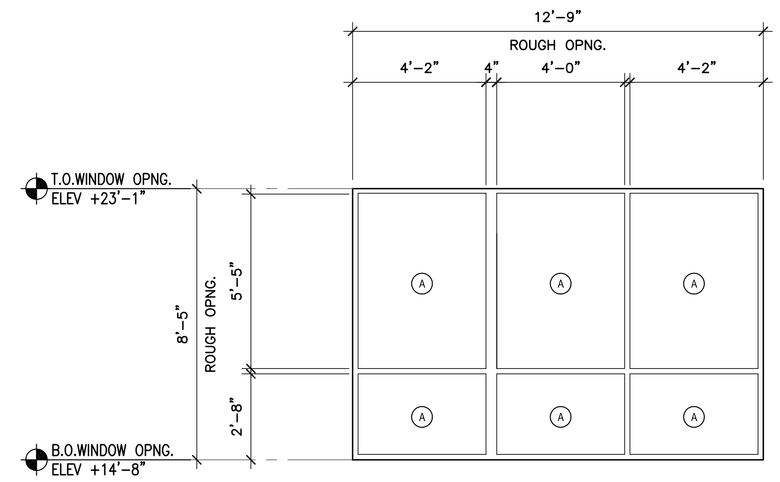


**2 ALT EXTERIOR WINDOW TYPE A-WEST WALL**
3/8"=1'-0"

| ELEVATION MATERIALS LEGEND |
|---|
| (A) 1 5/16" INSULATED LAMINATED VISION GLASS- LARGE MISSLE IMPACT |

WINDOW NOTES:

1. WINDOWS TO BE LARGE MISSLE IMPACT TYPE.
2. WINDOW FRAMES TO BE 2" X 6" ALUMINUM TYP, UNO
3. GLAZING TO MATCH TINT OF ADJACENT BUILDING.

**3 NOT USED**
NTS

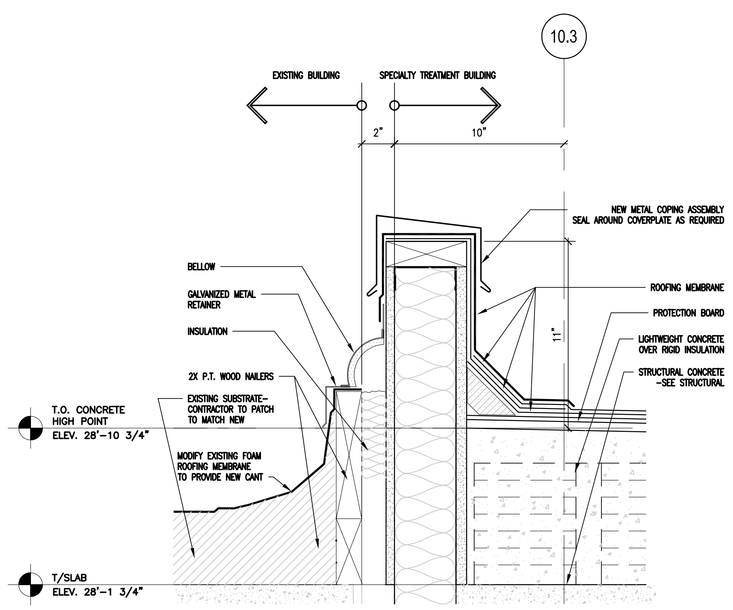


**4 ALT ROOF DETAIL AT COL 10.3 BLD INTERFACE**
3"=1'-0"

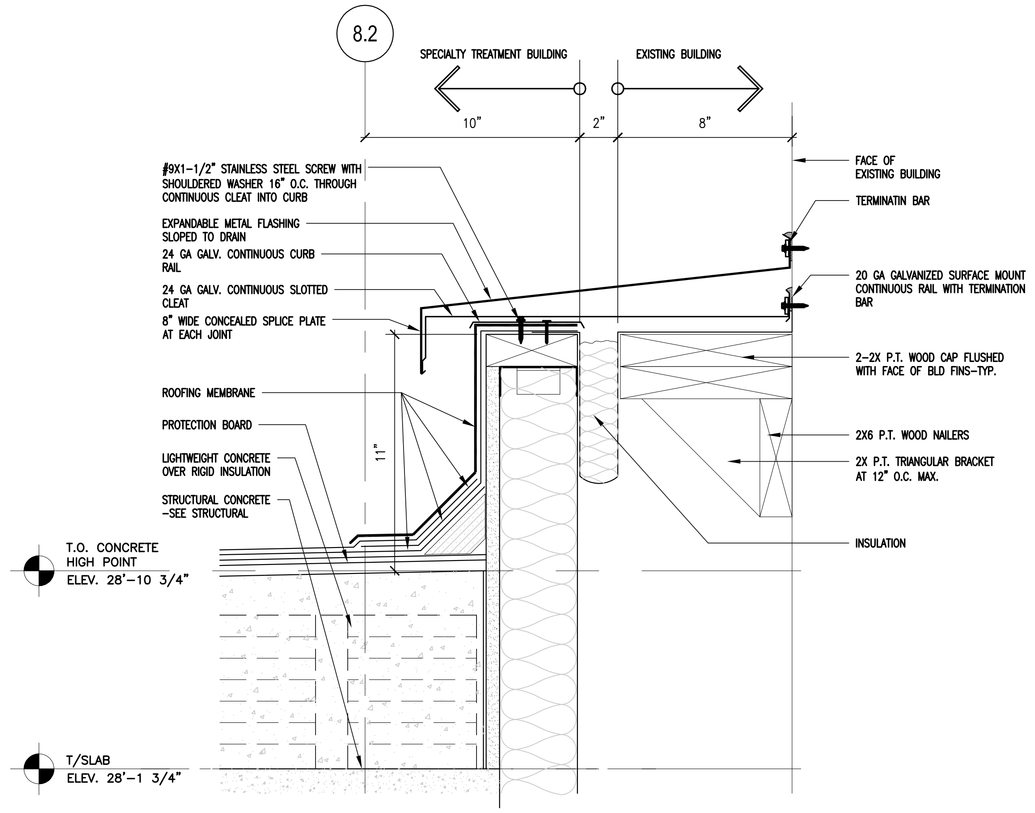


**5 ALT ROOF DETAIL AT COLUMN 8.2 BLD INTERFACE**
3"=1'-0"

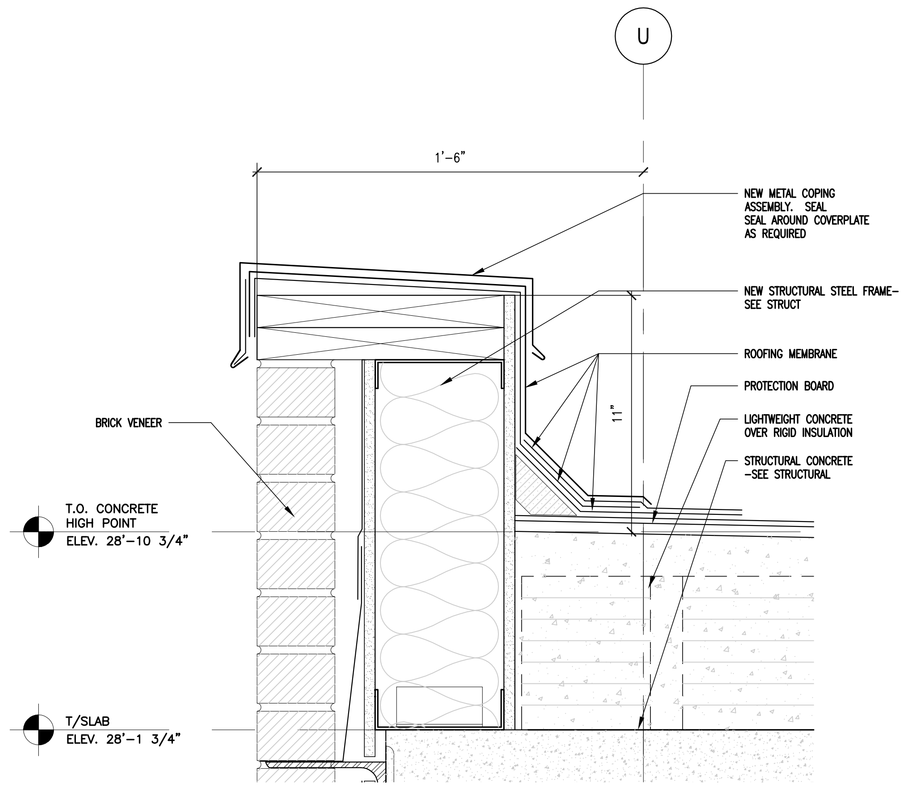


**6 ALT ROOF DETAIL AT COLUMN U**
3"=1'-0"

**THE ENTIRE SHEET IS RELATED TO DEDUCTIVE ALTERNATE #4**

# 04-18-12 MEDICAL EQUIPMENT AND INTERIOR DESIGN REVISIONS

| REVISION | DATE |
|---|---|
| 65% SUBMITTAL | 02/19/11 |
| 95% SUBMITTAL | 03/29/11 |
| 100% SUBMITTAL | 04/13/11 |
| CONSTRUCTION SET | 05/02/11 |
| 1 Clarifications to Bid Options- ADDENDUM #4 | 11/09/11 |
| MEDICAL EQUIPMENT AND INTERIOR DESIGN REVISIONS | 04/18/12 |

CONSULTANTS:

ARCHITECT/ENGINEERS:

ttv architects, inc.
110 EAST FORSYTH ST
JACKSONVILLE, FLORIDA 32202
T 904.798.8333
F 904.798.8335
www.ttvarch.com
FL Lic#AA0002609

Drawing Title: ALTERNATE ELEVATION AND ROOF DETAILS (DEDUCTIVE ALTERNATE #4)

Approved: Project Director

Project Title: SPECIALTY TREATMENT EXPANSION PROJECT- BUILDING #1

Location: JAMES A. HALEY VETERANS' HOSPITAL

Date: 02/19/11 | Checked: TTV | Drawn: TAG

Project Number: 673-CSI-100

Building Number: 1

Drawing Number: AS701

Dwg. 31 of 40

Office of Construction and Facilities Management

Department of Veterans Affairs

VA FORM 08-6231

# GROUND FLOOR DOOR SCHEDULE

| MARK | OPENING | | | DOOR | | | FRAME | DETAIL | | | LABEL | HDW | Remarks |
|---|---|---|---|---|---|---|---|---|---|---|---|---|---|
| | WD | HGT | THK | TYPE | MATL | Leaf # | | HEAD | JAMB | SILL | | SET # | |
| C0-22-1A | 6'-0" | 7'-0" | 1 3/4" | A | WD | 2 | HM | 1-AF200 | 2-AF200 | -- | -- | 8C | -- |
| GB-040A | 6'-0" | 7'-0" | 1 3/4" | A | WD | 2 | HM | 1-AF200 | 2-AF200 | -- | 90 MIN | 8 | -- |
| GB-040BA | 3'-0" | 7'-0" | 1 3/4" | A | WD | 1 | HM | 1-AF200 | 2-AF200 | -- | -- | 4A | -- |
| GB-040CA | 3'-0" | 7'-0" | 1 3/4" | A | WD | 1 | HM | 1-AF200 | 2-AF200 | -- | -- | 3A | -- |
| GB-040DA | 3'-0" | 7'-0" | 1 3/4" | A | WD | 1 | HM | 1-AF200 | 2-AF200 | -- | -- | 4B | -- |
| GB-040EA | 6'-0" | 7'-0" | 1 3/4" | A | WD | 2 | HM | 1-AF200 | 2-AF200 | -- | -- | 8B | -- |
| GB-040FA | 3'-0" | 7'-0" | 1 3/4" | A | WD | 1 | HM | 1-AF200 | 2-AF200 | -- | 45MIN | 4A | -- |
| GB-041A | 4'-0" | 7'-0" | 1 3/4" | A | WD | 1 | HM | 1-AF200 | 2-AF200 | -- | -- | 2 | -- |
| GB-042A | 4'-0" | 7'-0" | 1 3/4" | A | WD | 1 | HM | 1-AF200 | 2-AF200 | -- | -- | 2 | -- |
| GB-043A | 4'-0" | 7'-0" | 1 3/4" | A | WD | 1 | HM | 1-AF200 | 2-AF200 | -- | -- | 2 | -- |
| GB-044A | 4'-0" | 7'-0" | 1 3/4" | A | WD | 1 | HM | 1-AF200 | 2-AF200 | -- | -- | 2 | -- |
| GB-045A | 3'-0" | 7'-0" | 1 3/4" | A | WD | 1 | HM | 1-AF200 | 2-AF200 | -- | 45MIN | 4 | -- |
| GB-046A | 4'-0" | 7'-0" | 1 3/4" | A | WD | 1 | HM | 1-AF200 | 2-AF200 | -- | -- | 2 | -- |
| GB-047A | 3'-0" | 7'-0" | 1 3/4" | A | WD | 1 | HM | 1-AF200 | 2-AF200 | -- | 45MIN | 4 | -- |
| GB-048A | 4'-0" | 7'-0" | 1 3/4" | A | WD | 1 | HM | 1-AF200 | 2-AF200 | -- | -- | 2 | -- |
| GB-049A | 3'-0" | 7'-0" | 1 3/4" | A | WD | 1 | HM | 1-AF200 | 2-AF200 | -- | 45MIN | 4 | -- |
| GB-050A | 4'-0" | 7'-0" | 1 3/4" | A | WD | 1 | HM | 1-AF200 | 2-AF200 | -- | 90MIN | 2B | -- |
| GB-050AA | 3'-0" | 7'-0" | 1 3/4" | A | WD | 1 | HM | 1-AF200 | 2-AF200 | -- | 45MIN | 4D | -- |
| GB-050B | 6'-0" | 7'-0" | 1 3/4" | A | WD | 2 | HM | 1-AF200 | 2-AF200 | -- | 90MIN | 8C | -- |
| GB-050BA | 3'-0" | 7'-0" | 1 3/4" | A | WD | 1 | HM | 1-AF200 | 2-AF200 | -- | 45MIN | 4 | -- |
| GB-050C | 4'-0" | 7'-0" | 1 3/4" | A | WD | 1 | HM | 1-AF200 | 2-AF200 | -- | 90MIN | 2A | -- |
| GB-050CA | 3'-0" | 7'-0" | 1 3/4" | A | WD | 1 | HM | 1-AF200 | 2-AF200 | -- | -- | 3 | -- |
| GB-050DA | 3'-0" | 7'-0" | 1 3/4" | A | WD | 1 | HM | 1-AF200 | 2-AF200 | -- | -- | 3 | -- |
| GB-050EA | 3'-0" | 7'-0" | 1 3/4" | A | WD | 1 | HM | 1-AF200 | 2-AF200 | -- | -- | 3 | -- |
| GB-051A | 3'-0" | 7'-0" | 1 3/4" | A | WD | 1 | HM | 1-AF200 | 2-AF200 | -- | -- | 1 | -- |
| GB-052A | 3'-0" | 7'-0" | 1 3/4" | A | WD | 1 | HM | 1-AF200 | 2-AF200 | -- | -- | 1 | -- |
| GB-053A | 4'-0" | 7'-0" | 1 3/4" | A | WD | 1 | HM | 1-AF200 | 2-AF200 | -- | -- | 2 | -- |
| GB-054A | 3'-0" | 7'-0" | 1 3/4" | A | WD | 1 | HM | 1-AF200 | 2-AF200 | -- | -- | 1 | -- |
| GB-056A | 3'-6" | 7'-0" | 1 3/4" | A | WD | 1 | HM | 1-AF200 | 2-AF200 | -- | -- | 2 | -- |
| GB-057A | 3'-0" | 7'-0" | 1 3/4" | A | WD | 1 | HM | 1-AF200 | 2-AF200 | -- | -- | 3 | -- |
| RTU-01A | 8'-0" | 7'-0" | 1 3/4" | A | MTL | 2 | HM | 1-AF200 | 2-AF200 | -- | 90 MIN | – | SEE NOTES 1, 2, & 4 |
| RTU-01B | 4'-0" | 7'-0" | 1 3/4" | A | WD | 1 | HM | 1-AF200 | 2-AF200 | -- | 90 MIN | – | SEE NOTES 1, 2, 3 & 4. ADD ONE ADDITIONAL HINGE AT DOOR FRAME |
| S0-23-1A | 3'-0" | 7'-0" | 1 3/4" | A | WD | 1 | HM | 1-AF200 | 2-AF200 | -- | 90MIN | 7 | -- |
| S0-23-1B | 3'-0" | 7'-0" | 1 3/4" | A | STL | 1 | HM | 1-AF200 | 2-AF200 | -- | -- | 7B | -- |

# 1ST FLOOR DOOR SCHEDULE

| MARK | OPENING | | | DOOR | | | FRAME | DETAIL | | | LABEL | HDW | Remarks |
|---|---|---|---|---|---|---|---|---|---|---|---|---|---|
| | WD | HGT | THK | TYPE | MATL | Leaf # | | HEAD | JAMB | SILL | | SET # | |
| 1B-160A | 3'-0" | 7'-0" | 1 3/4" | A | WD | 1 | HM | 1-AF200 | 2-AF200 | -- | SMOKE | 4C | -- |
| 1B-161A | 4'-6" | 7'-0" | 1 3/4" | A | STL | 2 | HM | 1-AF200 | 2-AF200 | -- | SMOKE | 11 | 18" INACTIVE PANEL |
| 1B-162A | 3'-0" | 7'-0" | 1 3/4" | A | WD | 1 | HM | 1-AF200 | 2-AF200 | -- | 45MIN | 4D | -- |
| 1B-163A | 3'-0" | 7'-0" | 1 3/4" | A | WD | 1 | HM | 1-AF200 | 2-AF200 | -- | 45MIN | 4D | -- |
| 1B-164A | 4'-0" | 7'-0" | 1 3/4" | A | WD | 1 | HM | 3-AF200 | 3-AF200 | -- | -- | 5 | 1/16" LEAD SHIELDED DOOR |
| 1B-164B | 3'-0" | 7'-0" | 1 3/4" | A | WD | 1 | HM | 3-AF200 | 3-AF200 | -- | -- | 5 | 1/16" LEAD SHIELDED DOOR |
| 1B-165A | 3'-0" | 7'-0" | 1 3/4" | A | WD | 1 | HM | 1-AF200 | 2-AF200 | -- | -- | 4D | -- |
| 1B-165B | 3'-0" | 7'-0" | 1 3/4" | A | WD | 1 | HM | 1-AF200 | 2-AF200 | -- | -- | 4D | -- |
| 1B-166A | 3'-0" | 7'-0" | 1 3/4" | A | WD | 1 | HM | 1-AF200 | 2-AF200 | -- | -- | 5 | -- |
| 1B-167A | 3'-0" | 7'-0" | 1 3/4" | A | WD | 1 | HM | 1-AF200 | 2-AF200 | -- | -- | 3 | -- |
| 1B-168A | 4'-0" | 7'-0" | 1 3/4" | A | WD | 1 | HM | 3-AF200 | 3-AF200 | -- | -- | 5 | 1/16" LEAD SHIELDED DOOR |
| 1B-168AA | 3'-0" | 7'-0" | 1 3/4" | A | WD | 1 | HM | 3-AF200 | 3-AF200 | -- | -- | 4 | 1/16" LEAD SHEILDED DOOR |
| 1B-168B | 3'-0" | 7'-0" | 1 3/4" | A | WD | 1 | HM | 3-AF200 | 3-AF200 | -- | -- | 5 | 1/16" LEAD SHIELDED DOOR |
| 1B-169A | 4'-0" | 7'-0" | 1 3/4" | A | WD | 1 | HM | 1-AF200 | 2-AF200 | -- | SMOKE | 2C | -- |
| 1B-170A | 4'-0" | 7'-0" | 1 3/4" | A | WD | 1 | HM | 1-AF200 | 2-AF200 | -- | -- | 2 | -- |
| 1B-172A | 3'-0" | 7'-0" | 1 3/4" | A | WD | 1 | HM | 1-AF200 | 2-AF200 | -- | -- | 3 | -- |
| 1B-173A | 3'-0" | 7'-0" | 1 3/4" | A | WD | 1 | HM | 1-AF200 | 2-AF200 | -- | -- | 1 | -- |
| 1B-174A | 3'-0" | 7'-0" | 1 3/4" | A | WD | 1 | HM | 1-AF200 | 2-AF200 | -- | 45MIN | 4 | -- |
| 1B-175A | 3'-0" | 7'-0" | 1 3/4" | A | WD | 1 | HM | 1-AF200 | 2-AF200 | -- | -- | 4B | -- |
| 1B-176A | 3'-0" | 7'-0" | 1 3/4" | A | WD | 1 | HM | 1-AF200 | 2-AF200 | -- | 45MIN | 4 | -- |
| C1-60-1A | 4'-0" | 7'-0" | 1 3/4" | A | WD | 1 | HM | 1-AF200 | 2-AF200 | -- | SMOKE | 2C | -- |
| C1-62-1A | 3'-8" | 7'-0" | 1 3/4" | A | WD | 1 | HM | 1-AF200 | 2-AF200 | -- | SMOKE | 10 | EMERGENCY EXIT ONLY |
| C1-62-1B | 6'-0" | 7'-0" | 1 3/4" | B | ALUM | 2 | HM | 6-AF200 | 6-AF200 | -- | -- | 9 | -- |
| S1-23-1A | 3'-0" | 7'-0" | 1 3/4" | A | WD | 1 | HM | 1-AF200 | 2-AF200 | -- | 90MIN | 7 | -- |

# 2nd FLOOR DOOR SCHEDULE

| MARK | OPENING | | | DOOR | | | FRAME | DETAIL | | | LABEL | HDW | Remarks |
|---|---|---|---|---|---|---|---|---|---|---|---|---|---|
| | WD | HGT | THK | TYPE | MATL | Leaf # | | HEAD | JAMB | SILL | | SET # | |
| 2B-262A | 6'-0" | 7'-0" | 1 3/4" | A | WD | 2 | HM | 1-AF200 | 2-AF200 | -- | SMOKE | 8A | -- |
| 2B-262AA | 3'-0" | 7'-0" | 1 3/4" | A | WD | 1 | HM | 1-AF200 | 2-AF200 | -- | -- | 4B | -- |
| 2B-263A | 3'-0" | 7'-0" | 1 3/4" | A | WD | 1 | HM | 1-AF200 | 2-AF200 | -- | -- | 1B | -- |
| 2B-264A | 3'-0" | 7'-0" | 1 3/4" | A | WD | 1 | HM | 1-AF200 | 2-AF200 | -- | -- | 3A | -- |
| 2B-265A | 3'-0" | 7'-0" | 1 3/4" | A | WD | 1 | HM | 1-AF200 | 2-AF200 | -- | -- | 4A | -- |
| 2B-266A | 3'-0" | 7'-0" | 1 3/4" | A | WD | 1 | HM | 1-AF200 | 2-AF200 | -- | -- | 1A | -- |
| 2B-267A | 3'-0" | 7'-0" | 1 3/4" | A | WD | 1 | HM | 1-AF200 | 2-AF200 | -- | -- | 1A | -- |
| 2B-268A | 3'-0" | 7'-0" | 1 3/4" | A | WD | 1 | HM | 1-AF200 | 2-AF200 | -- | -- | 1A | -- |
| 2B-269A | 3'-0" | 7'-0" | 1 3/4" | A | WD | 1 | HM | 1-AF200 | 2-AF200 | -- | -- | 1A | -- |
| 2B-270A | 3'-0" | 7'-0" | 1 3/4" | A | WD | 1 | HM | 1-AF200 | 2-AF200 | -- | -- | 1A | -- |
| 2B-271A | 3'-0" | 7'-0" | 1 3/4" | A | WD | 1 | HM | 1-AF200 | 2-AF200 | -- | -- | 1A | -- |
| 2B-272A | 3'-0" | 7'-0" | 1 3/4" | A | WD | 1 | HM | 1-AF200 | 2-AF200 | -- | -- | 1A | -- |
| 2B-273A | 3'-0" | 7'-0" | 1 3/4" | A | WD | 1 | HM | 1-AF200 | 2-AF200 | -- | -- | 3A | -- |
| 2B-274A | 3'-0" | 7'-0" | 1 3/4" | A | WD | 1 | HM | 1-AF200 | 2-AF200 | -- | -- | 3A | -- |
| 2B-275A | 3'-0" | 7'-0" | 1 3/4" | A | WD | 1 | HM | 1-AF200 | 2-AF200 | -- | -- | 1A | -- |
| 2B-276A | 3'-0" | 7'-0" | 1 3/4" | A | WD | 1 | HM | 1-AF200 | 2-AF200 | -- | -- | 1A | -- |
| 2B-277A | 3'-0" | 7'-0" | 1 3/4" | A | WD | 1 | HM | 1-AF200 | 2-AF200 | -- | -- | 1A | -- |
| 2B-278A | 3'-0" | 7'-0" | 1 3/4" | A | WD | 1 | HM | 1-AF200 | 2-AF200 | -- | -- | 4A | -- |
| 2B-279A | 3'-0" | 7'-0" | 1 3/4" | A | WD | 1 | HM | 1-AF200 | 2-AF200 | -- | -- | 1B | -- |
| C2-60-1A | 6'-0" | 7'-0" | 1 3/4" | A | WD | 2 | HM | 1-AF200 | 2-AF200 | -- | -- | 8 | -- |
| S2-2-23A | 3'-0" | 7'-0" | 1 3/4" | A | WD | 1 | HM | 1-AF200 | 2-AF200 | -- | 90MIN | 7A | -- |
| S2-2-23B | 3'-0" | 7'-0" | 1 3/4" | A | WD | 1 | HM | 1-AF200 | 2-AF200 | -- | 90MIN | 7C | -- |

## DOOR SCHEDULE: GENERAL NOTES

1. CONTRACTOR TO FIELD VERIFY ALL EXISTING OPENINGS.
2. ALL DOOR HARDWARE SHALL BE ABA COMPLIANT.
3. GC TO PROVIDE TEMPORARY DOORS AND LOCKS REQUIRED TO MAINTAIN A SECURED CONDITION THROUGH OUT THE DURATION OF WORK.
4. GC TO CONFIRM ALL DOOR HARDWARE AND LOCKSET FUNCTION WITH VA
5. LOCKSETS ARE TO BE KEYED TO MATCH VA MASTER SYSTEM. COORD. W/ VA.
6. REFER TO SPECIFICATION FOR HARDWARE SET INFORMATION.

## DOOR TYPES

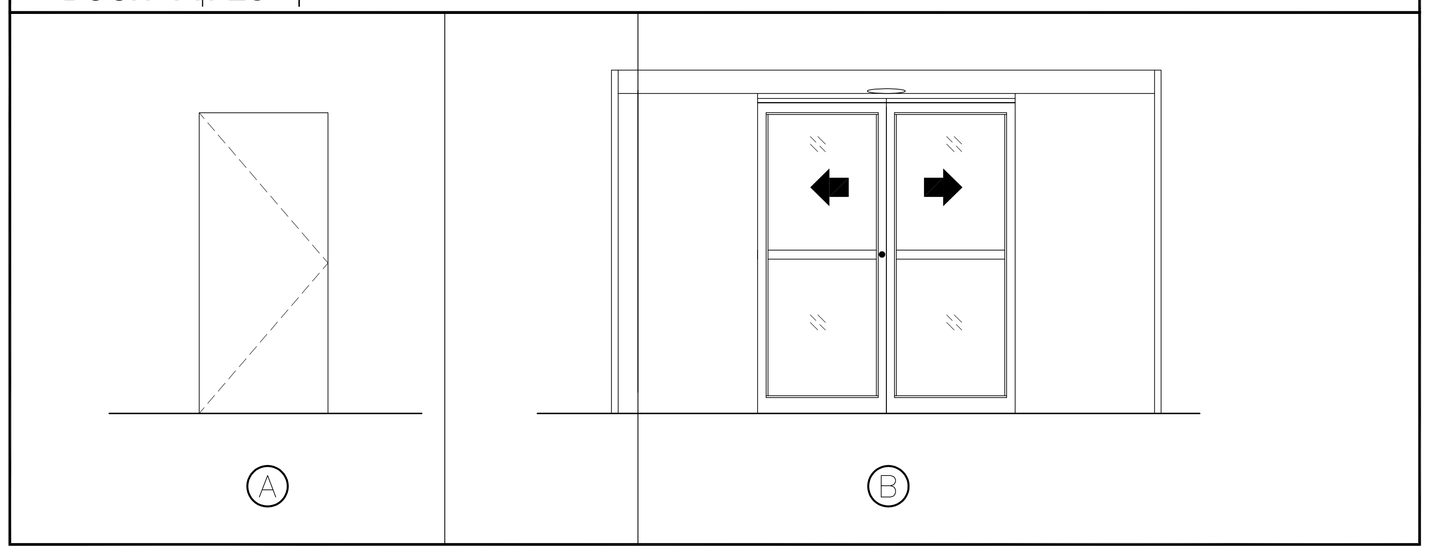


## 04-18-12 MEDICAL EQUIPMENT AND INTERIOR DESIGN REVISIONS

| REVISION | DATE |
|---|---|
| 65% SUBMITTAL | 02/19/11 |
| 95% SUBMITTAL | 03/29/11 |
| 100% SUBMITTAL | 04/13/11 |
| CONSTRUCTION SET | 05/02/11 |
| 1 Clarifications to Bid Options- ADDENDUM #4 | 11/09/11 |
| MEDICAL EQUIPMENT AND INTERIOR DESIGN REVISIONS | 04/18/12 |

CONSULTANTS:

ARCHITECT/ENGINEERS:


ttv architects, inc.
110 EAST BIDWELL ST
JACKSONVILLE, FLORIDA 32202
T 904.798.8333
F 904.798.8335
www.ttvarch.com
FL Lic.#AA0002609


Drawing Title: DOOR SCHEDULES

Approved: Project Director

Project Title: SPECIALTY TREATMENT EXPANSION PROJECT- BUILDING #1

Location: JAMES A. HALEY VETERANS' HOSPITAL

Date: 02/19/11 | Checked: TTV | Drawn: TAG

Project Number: 673-CSI-100

Building Number: 1

Drawing Number: AF101

Dwg. 32 of 40

Office of Construction and Facilities Management

Department of Veterans Affairs

VA FORM 08-6231

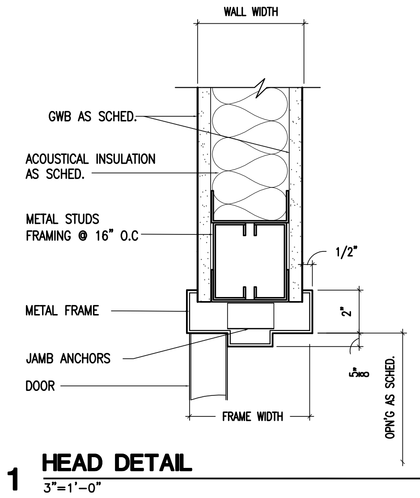


## 1 HEAD DETAIL
3"=1'-0"

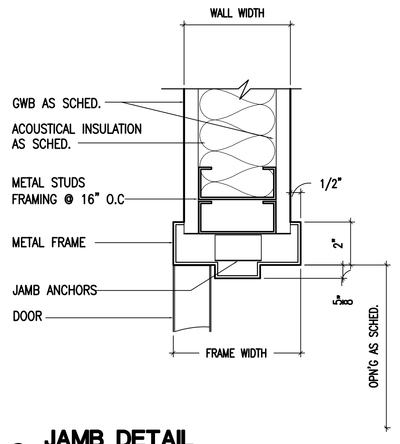


## 2 JAMB DETAIL
3"=1'-0"

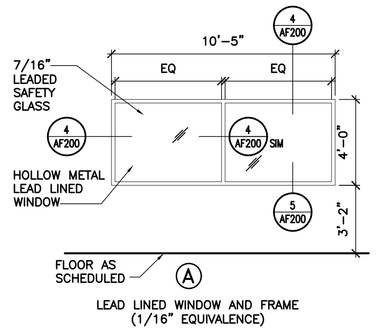


## 7 INTERIOR WINDOW TYPE A
6"=1'-0"

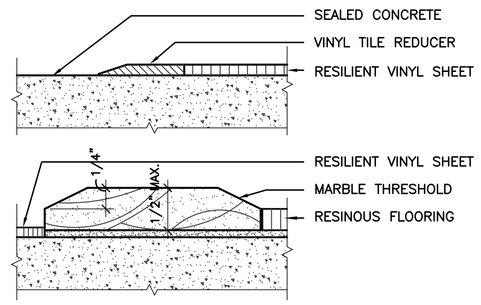


## 10 FLOOR TRANSITIONS
3" = 1'-0"

NOTE: PROVIDE MANUFACTURER RECOMMENDED FLOORING TRESHOLD/TRANSITIONS AT ALL CONDITIONS WHERE NEW FLOORING MEETS NEW AND EXISTING FLOORING, TYP.

## LEAD SHIELDING NOTES

1. ALL SHIELDING SHALL EXTEND FROM THE FLOOR TO A HEIGHT OF 7' AFF.
2. ALL CUTOUTS INTRODUCED INTO THE SHIELDING FOR THE PURPOSES OF INSTALLING OUTLETS, SWITCHES, ETC. SHALL BE BACKED WITH AN EQUIVALENT THICKNESS OF LEAD AND IN SUCH A MANNER AS TO ALLOW NO VOIDS. (THIS CAN BE DESCRIBED AS THE LIGHT TEST, IF YOU DARKENED THE ROOM AND POINTED A LIGHT AT ANY BARRIER, WOULD A PERSON OUTSIDE THE BARRIER SEE LIGHT.)
3. ANY JOINTS SHALL OVERLAP WITH THE THICKER THICKNESS OF LEAD BY AT LEAST 1/2" OR AN EQUIVALENT THICKNESS BE PLACED BEHIND THE JOINT. THIS INCLUDES ALL CORNER JOINTS.
4. IF REQUIRED BY VA, GC TO HAVE A MEDICAL PHYSICIST VISUALLY SURVEY THE SHIELDING PRIOR TO THE FINAL FINISHES AND HAVE A RADIOGRAPHIC EVALUATION BE PERFORMED UPON COMPLETION OF THE INSTALLATION.

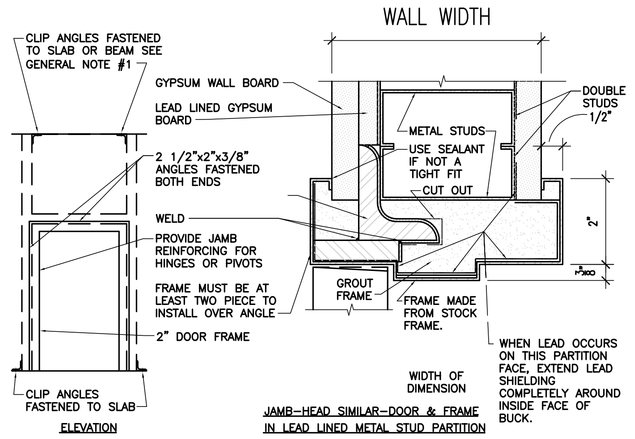


GENERAL NOTES:

1. SPECIAL ANCHORAGE OF CLIP ANGLES AT INTERSTITIAL DECKS MAY BE REQUIRED.
2. THICKNESS OF LEAD AND LEAD GLASS IN DOORS IS TO BE SPECIFIED ON PLANS AND SCHEDULES REFER TO OTHER DRAWINGS FOR ADDITIONAL INFORMATION
3. LEAD IS NOT REQUIRED IN THE DOOR HEAD WHEN IT IS ONLY REQUIRED IN WALLS TO 7'-0"HEIGHT.

## 3 LEAD LINED DOOR JAMB DETAIL
3"=1'-0" HEAD SIM.

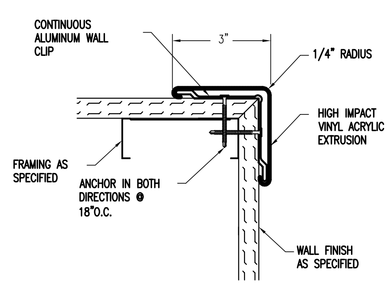


DETAIL

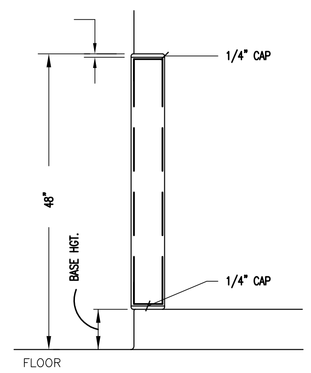


ELEVATION

## 8 TYPICAL CORNER GUARD DETAIL
1"-0"=1'-0" OCCURS AT ALL OUTSIDE CORNER WALL LOCATIONS

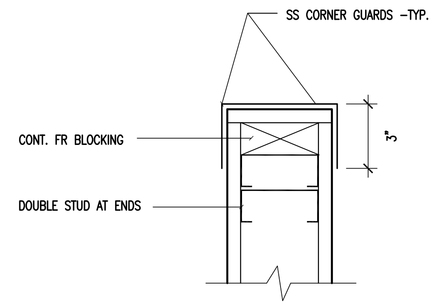


## 9 TYPICAL END CAP DETAIL
3"=1'-0" OCCURS AT HOLDING CUBICLE WALL LOCATIONS ONLY

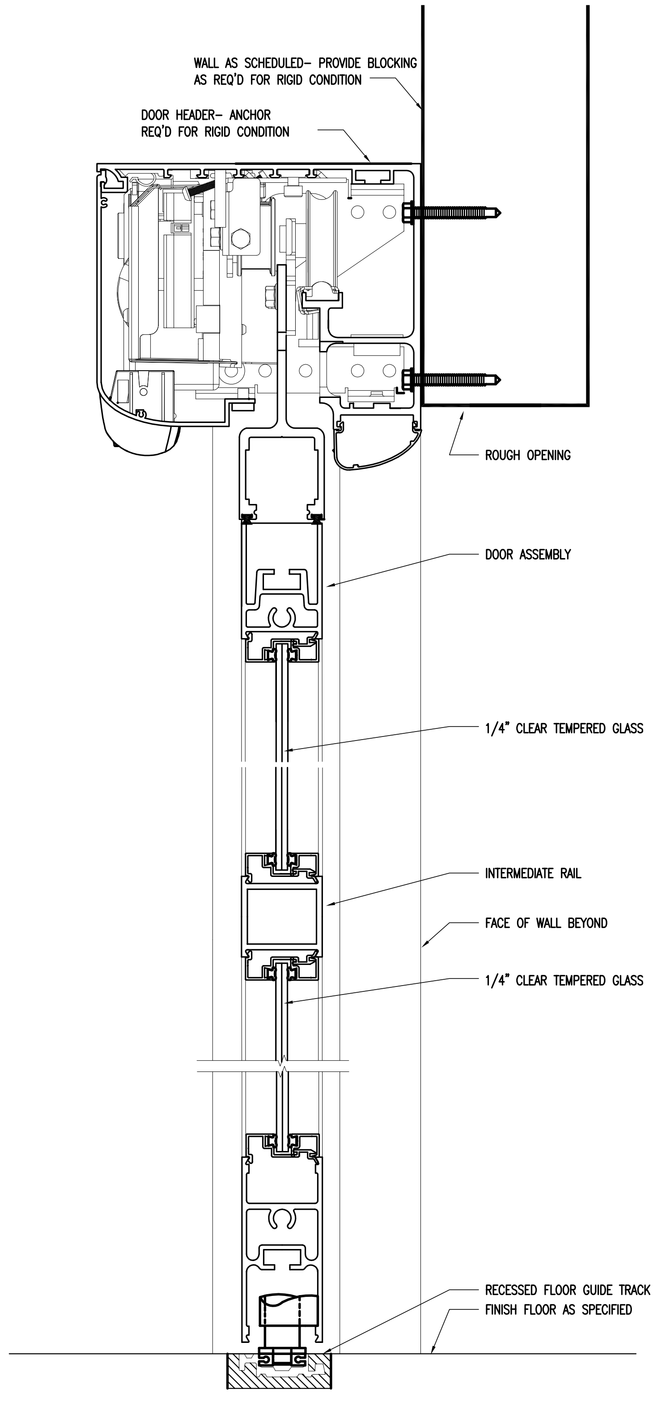


SECTION

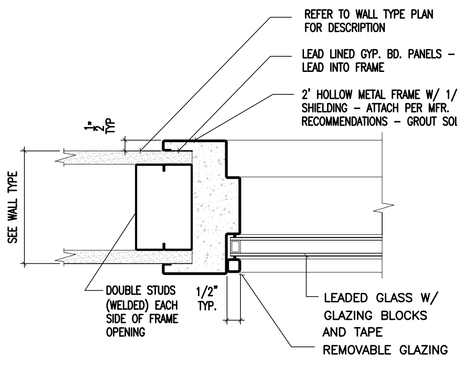


## 4 LEAD LINED WINDOW JAMB DETAIL
3"=1'-0" HEAD SIM.

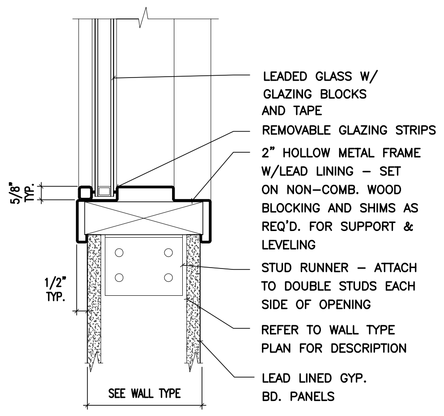


## 5 LEAD LINED WINDOW SILL DETAIL
3"=1'-0" HEAD SIM.

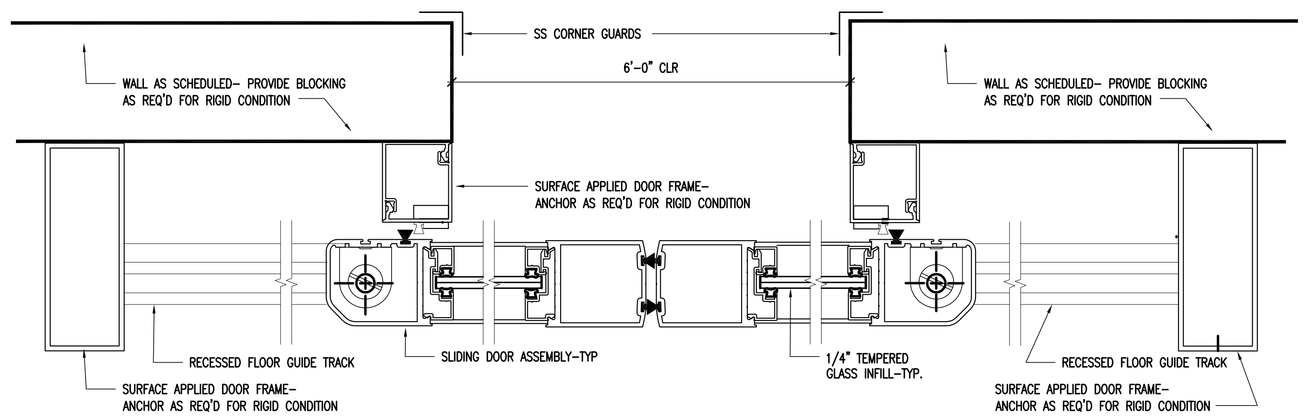


PLAN

## 6 SURFACE APPLIED SLIDING DOOR DETAILS
N.T.S.

# 04-18-12 MEDICAL EQUIPMENT AND INTERIOR DESIGN REVISIONS

| REVISION | DATE |
|---|---|
| 65% SUBMITTAL | 02/19/11 |
| 95% SUBMITTAL | 03/29/11 |
| 100% SUBMITTAL | 04/13/11 |
| CONSTRUCTION SET | 05/02/11 |
| 1 Clarifications to Bid Options- ADDENDUM #4 | 11/09/11 |
| MEDICAL EQUIPMENT AND INTERIOR DESIGN REVISIONS | 04/18/12 |

CONSULTANTS:

ARCHITECT/ENGINEERS:

ttv architects, inc.
110 EAST FORSYTH ST
JACKSONVILLE, FLORIDA 32202
T 904.798.8333
F 904.798.8335
www.ttvarch.com
FL Lic#AA0002609

Drawing Title: DETAILS

Approved: Project Director

Project Title: SPECIALTY TREATMENT EXPANSION PROJECT- BUILDING #1

Location: JAMES A. HALEY VETERANS' HOSPITAL

Date: 02/19/11 | Checked: TTV | Drawn: TAG

Project Number: 673-CSI-100

Building Number: 1

Drawing Number: AF200

Dwg. 33 of 40

Office of Construction and Facilities Management

Department of Veterans Affairs

VA FORM 08-6231

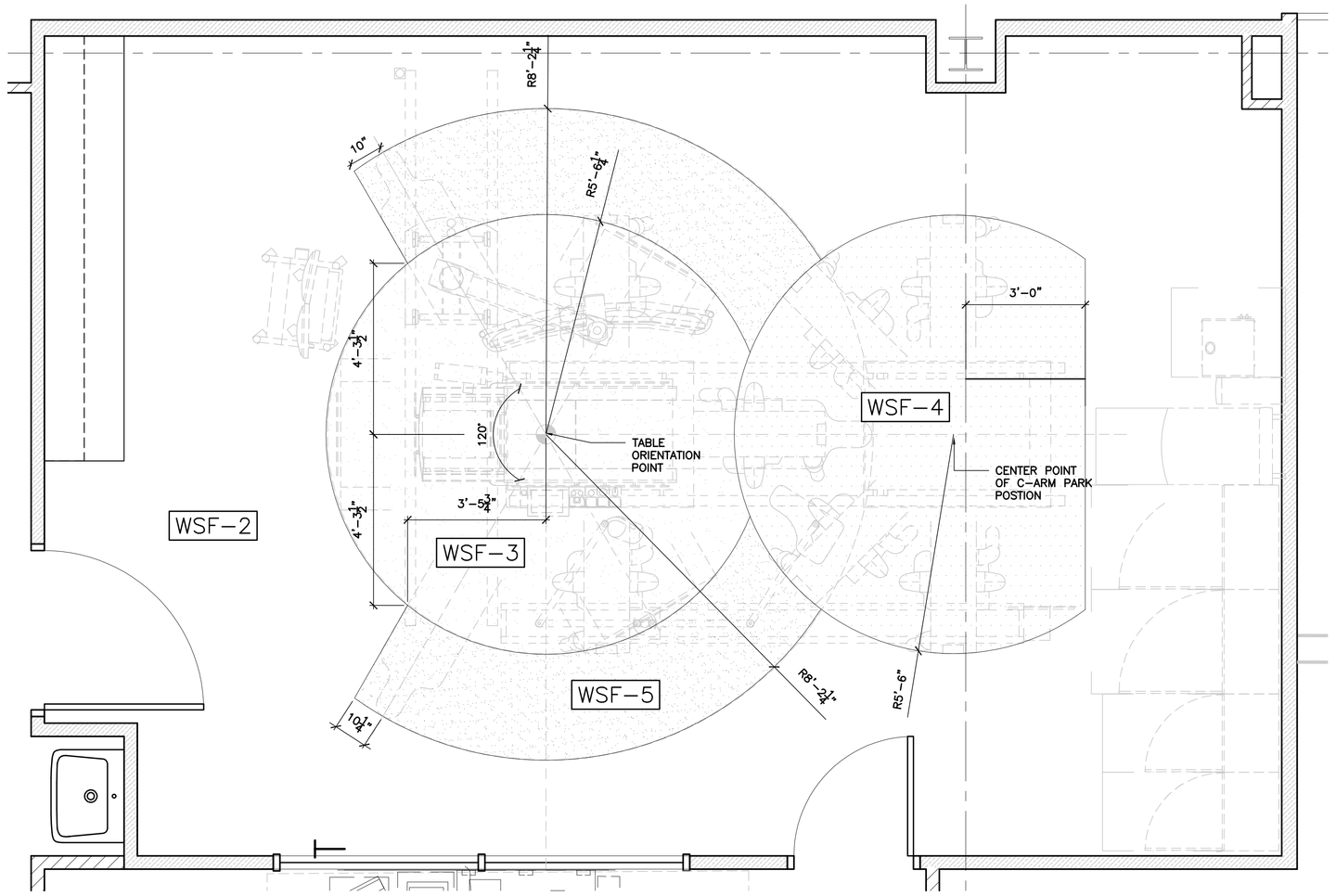


N

**1 FLOOR PATTERN LAYOUT- ANGIO PROCEDURE ROOM**
1/2"=1'-0"

COORDINATE INSTALLATION WITH ALL FLOOR MOUNTED EQUIPMENT

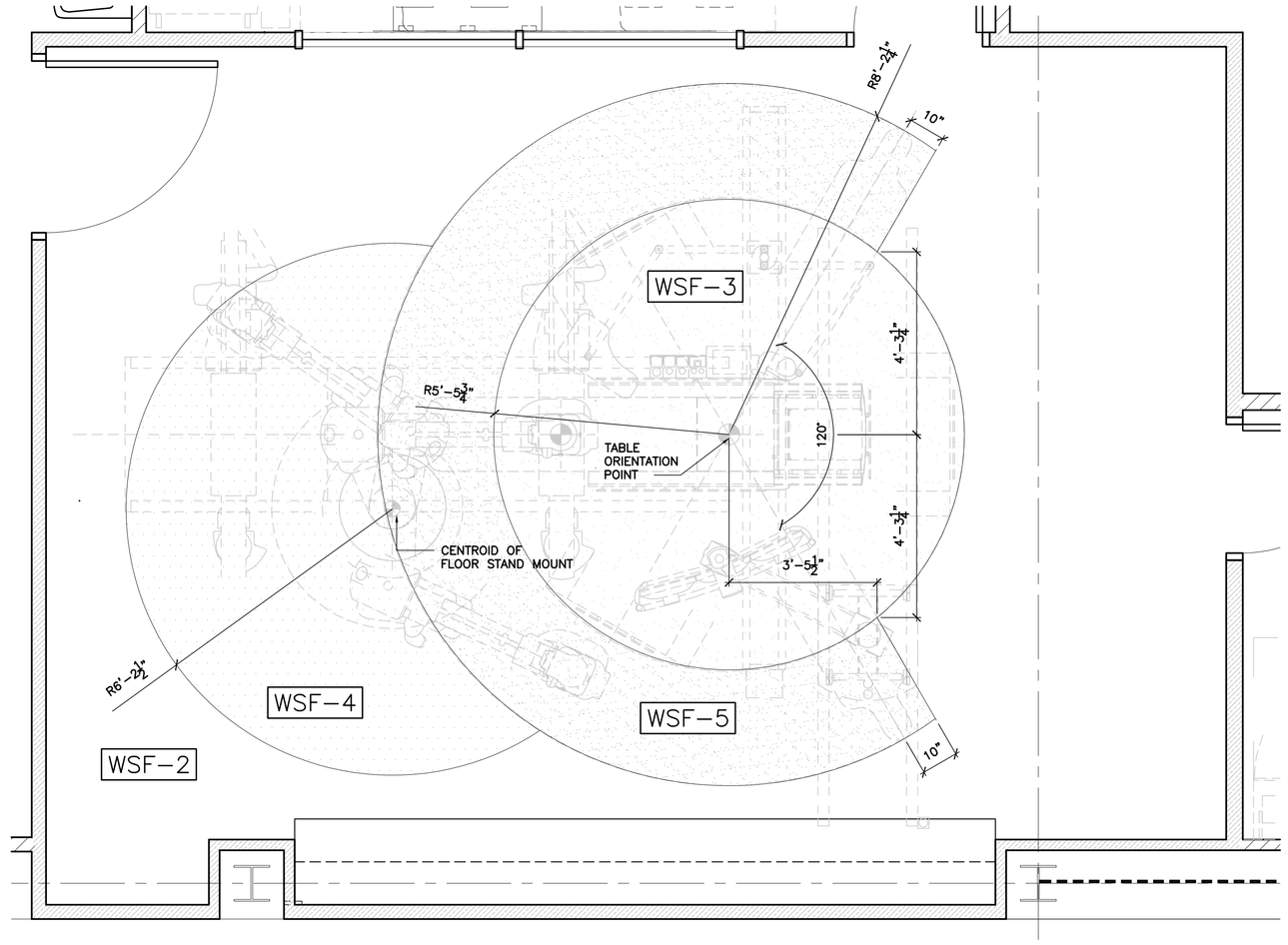


N

**2 FLOOR PATTERN LAYOUT- BIPLANE ROOM**
1/2"=1'-0"

COORDINATE INSTALLATION WITH ALL FLOOR MOUNTED EQUIPMENT

## 04-18-12 MEDICAL EQUIPMENT AND INTERIOR DESIGN REVISIONS

| REVISION | DATE |
|---|---|
| 65% SUBMITTAL | 02/19/11 |
| 95% SUBMITTAL | 03/29/11 |
| 100% SUBMITTAL | 04/13/11 |
| CONSTRUCTION SET | 05/02/11 |
| 1 Clarifications to Bid Options- ADDENDUM #4 | 11/09/11 |
| MEDICAL EQUIPMENT AND INTERIOR DESIGN REVISIONS | 04/18/12 |

CONSULTANTS:

ARCHITECT/ENGINEERS:

ttv architects, inc.
110 EAST BIDWELL ST
JACKSONVILLE, FLORIDA 32202
T 904.798.8333
F 904.798.8335
www.ttvarch.com
FL Lic #AA0002609

Drawing Title: FINISH DETAILS

Approved: Project Director

Project Title: SPECIALTY TREATMENT EXPANSION PROJECT- BUILDING #1

Location: JAMES A. HALEY VETERANS' HOSPITAL

Date: 02/19/11 | Checked: TTV | Drawn: TAG

Project Number: 673-CSI-100

Building Number: 1

Drawing Number: AF201

Dwg. 34 of 40

Office of Construction and Facilities Management

Department of Veterans Affairs

VA FORM 08-6231

NOTE: THE PURPOSE OF THIS DRAWING SHEET IS TO SERVE AS A GUIDE FOR ALL NEW PERMANENT ROOM SIGNAGE WITHIN THE AREA OF RENOVATION. REFER TO OTHER DRAWINGS OR SPECIFICATIONS FOR ADDITIONAL INFORMATION REGARDING SIGNAGE.

NOTE: FUSION BY TAKEFORM ARCHITECTURAL GRAPHICS SERVES AS THE BASIS OF DESIGN FOR THE INTERIOR SIGNAGE. GC MAY SUBMIT ALTERNATE PRODUCTS AND/OR MANUFACTURERS TO VA PROJECT MANAGER FOR REVIEW AND APPROVAL.

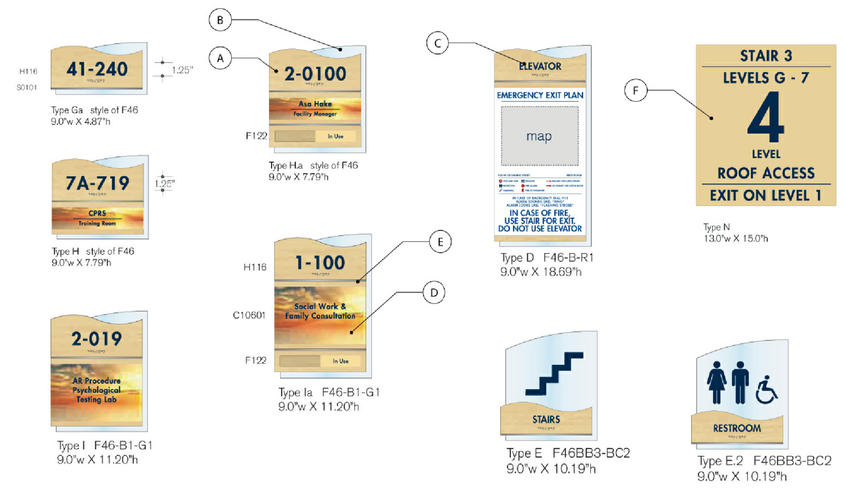


Face Finish
BRN (A) **LW101** Light Maple

Backer Finish
(B) ~~OA103 Glass Blue~~
LANGUID BLUE BY SHERWIN WILLIAMS

Raised Copy
(C) **CO404 Twilight**
Font Futura Heavy

Insert
(D) White Paper/Futura Heavy
~~Twilight graphics~~
~~shutterstock - 56000437~~
PALM TREE GRAPHICS BY SHUTTERSTOCK

Metal Accent
(E) 01 = Clear anodized

(F) Acrylic Construction:
Digitally Printed to
resemble <**LW101** Ligh: Maple>

takeform
Architectural Graphics
One Maher Way, Medina, New York, 14103
585.798.8888 585.798.8889
takeform.net

Fusion™
SIGNAGE COLLECTIONS FOR INTERIORS

Client:
James A. Haley Veteran's Hospital

Project:
West Polytrauma

Date: 06.25.08
Drawn By: DTT

Filename:
VET0001_8299_RND_rev2

Revisions:
03.11.09TR
03.17.09CJ

**Fusion 46**

Legend
A) Directory
B) Directional
C) Overhead
D) Stairwell Evacuation
E) Stair
E.2) Restroom
E.3) Misc. Room ID
F) 5" Room ID
G) 8.5" Room ID
H) Room ID w/ 2.25" Changeable insert
I) Room ID w/ 5" Changeable insert
J) Conference Room
K) Desk Stand
L) Workstation ID
M) Flag Mount
N) Interior Stairwell

Notes:
Not to scale. Dimensions indicated are approximate.

Sample text shown for layout only.

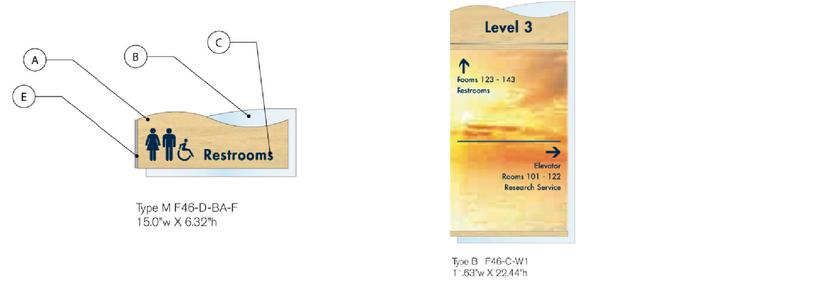


Type Q .25" Dimensional Letters
83.5"w X 3.0"h
**LM101** Satin Silver
Pin Mount

Face Finish
BRN (A) LW101 Light Maple

Backer Finish
(B) ~~OA103 Glass Blue~~
LANGUID BLUE BY SHERWIN WILLIAMS

Raised Copy
(C) **CO404 Twilight**
Font Futura Heavy

Metal Accent
(E) 01 = Clear anodized

takeform
Architectural Graphics
One Maher Way, Medina, New York, 14103
585.798.8888 585.798.8889
takeform.net

Fusion™
SIGNAGE COLLECTIONS FOR INTERIORS

Client:
James A. Haley Veteran's Hospital

Project:
West Polytrauma

Date: 06.25.08
Drawn By: DTT

Filename:
VET0001_8299_RND_rev2

Revisions:
03.11.09TR
03.17.09CJ

**Fusion 46**

Legend
A) Directory
B) Directional
C) Overhead
D) Stairwell Evacuation
E) Stair
E.2) Restroom
E.3) Misc. Room ID
F) 5" Room ID
G) 8.5" Room ID
H) Room ID w/ 2.25" Changeable insert
I) Room ID w/ 5" Changeable insert
J) Conference Room
K) Desk Stand
L) Workstation ID
M) Flag Mount
N) Interior Stairwell

Notes:
Not to scale. Dimensions indicated are approximate.

Sample text shown for layout only.

**"Add-on" components for existing signs**

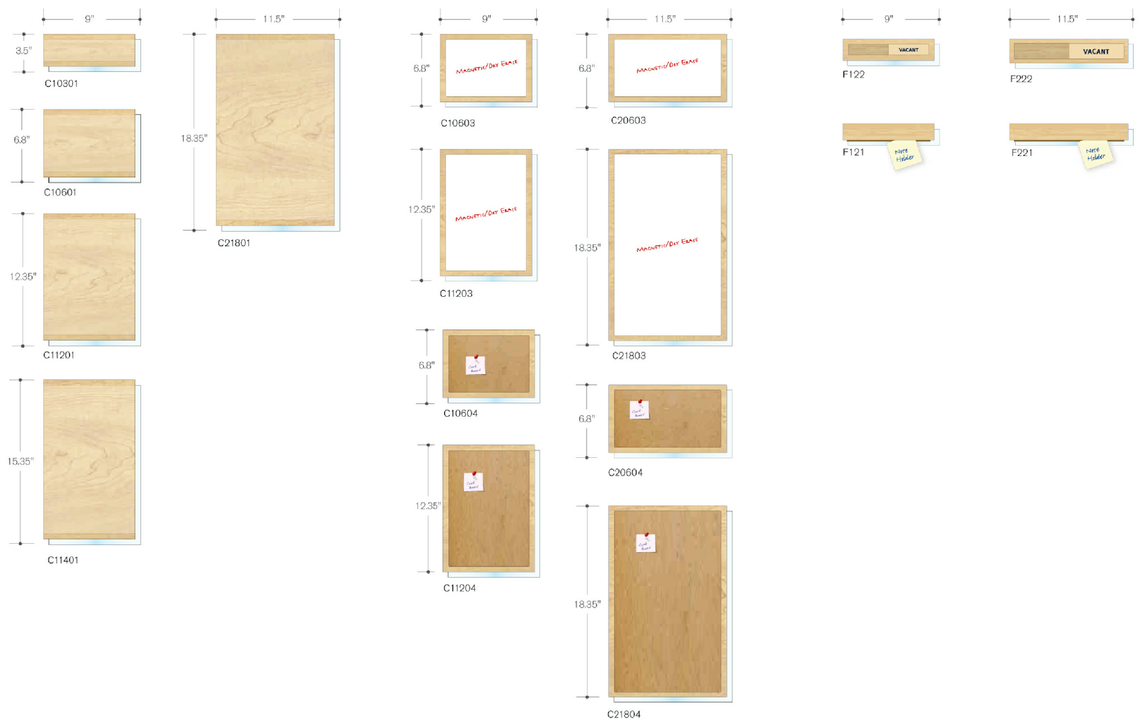


takeform
Architectural Graphics
One Maher Way, Medina, New York, 14103
585.798.8888 585.798.8889
takeform.net

Fusion™
SIGNAGE COLLECTIONS FOR INTERIORS

Client:
James A. Haley Veteran's Hospital

Project:
Standards

Date: 04.30.09
Drawn By: TW

Filename:
VET0001_standards_RND

Revisions:

Notes:
Not to scale. Dimensions indicated are approximate.

Sample text shown for layout only.

**Example uses for "Add-on" components**

takeform
Architectural Graphics
One Maher Way, Medina, New York, 14103
585.798.8888 585.798.8889
takeform.net

Fusion™
SIGNAGE COLLECTIONS FOR INTERIORS

Client:
James A. Haley Veteran's Hospital

Project:
Standards

Date: 04.30.09
Drawn By: TW

Filename:
VET0001_standards_RND

Revisions:

Notes:
Not to scale. Dimensions indicated are approximate.

Sample text shown for layout only.

# 04-18-12 MEDICAL EQUIPMENT AND INTERIOR DESIGN REVISIONS

| REVISION | DATE |
|---|---|
| 65% SUBMITTAL | 02/19/11 |
| 95% SUBMITTAL | 03/29/11 |
| 100% SUBMITTAL | 04/13/11 |
| CONSTRUCTION SET | 05/02/11 |
| 1 Clarifications to Bid Options- ADDENDUM #4 | 11/09/11 |
| MEDICAL EQUIPMENT AND INTERIOR DESIGN REVISIONS | 04/18/12 |

CONSULTANTS:

ARCHITECT/ENGINEERS:

ttv architects, inc.
110 EAST BIDWELL ST.
JACKSONVILLE, FLORIDA 32202
T 904.798.8333
F 904.798.8335
www.ttvarch.com
FL Lic.#AA0002609

Drawing Title: PERMANENT ROOM SIGNAGE

Approved: Project Director

Project Title: SPECIALTY TREATMENT EXPANSION PROJECT- BUILDING #1

Location: JAMES A. HALEY VETERANS' HOSPITAL

Date: 02/19/11 | Checked: TTV | Drawn: TAG

Project Number: 673-CSI-100

Building Number: 1

Drawing Number: AF202

Dwg. 35 of 40

Office of Construction and Facilities Management

Department of Veterans Affairs

VA FORM 08-6231