GENERAL NOTES:

1. ALL CONDUITS SHALL BE CONCEALED IN WALL, CEILING, OR UNDERGROUND. SURFACE CONDUITS WILL BE PERMITTED IN ELECTRICAL AND MECHANICAL ROOMS ONLY. CONTRACTOR SHALL CUT EXISTING WALLS TO CONCEAL CONDUITS. REPAIR ALL WALLS TO ITS ORIGINAL CONDITION AFTER INSTALLING CONDUIT OR OUTLET BOXES.
2. DUPLEX RECEPTACLES ARE PROVIDED IN MECHANICAL ROOMS TO POWER ENERGY MANAGEMENT CONTROL BOXES. COORDINATE WITH MECHANICAL CONTRACTOR FOR EXACT LOCATION OF BOXES. PROVIDE 3 #12 WIRES IN 3/4" CONDUIT FROM BOX TO ASSOCIATED DUPLEX RECEPTACLES.
3. SEE ARCHITECTURAL CEILING PLAN FOR EXACT LOCATION OF LIGHTING FIXTURES.
4. CONNECT MOTORIZED DAMPERS TO CLOSEST 120V RECEPTACLE CIRCUIT. COORDINATE WITH MECHANICAL CONTRACTOR FOR LOCATION.
5. INTERLOCK EXHAUST FAN WITH RESPECTIVE AHU. PROVIDE REQUIRED #12 WIRE IN CONDUIT. SEE MECHANICAL DRAWINGS, FAN SCHEDULE, FOR INTERLOCK.
6. ELECTRICAL CONTRACTOR SHALL COORDINATE WITH MECHANICAL CONTRACTOR TO PROVIDE ADEQUATE WORKING SPACE FOR ALL PANELBOARDS, MOTOR STARTERS AND FUSED DISCONNECT SWITCH. WORKING SPACE SHALL BE CLEAR OF PIPES AND DUCTS. ANY CODE VIOLATION AS A RESULT OF LACK OF COORDINATION SHALL BE RECTIFIED AT NO COST TO OWNER.
7. PROVIDE NEW CEILING TILES SAME TYPE AS EXISTING TO REPLACE DAMAGED TILES AS A RESULT OF CONTRACTOR OPERATION.
8. FIREPROOF ALL WALL AND FLOOR PENETRATIONS. AT COMPLETION OF PROJECT PROVIDE A LETTER CERTIFYING THAT ALL WALL OPENINGS HAVE BEEN RESTORED AND VOIDS FILLED WITH FIRE RATED COMPOUND BY CONTRACTOR.
9. RESTORE DISTURBED WALLS TO ITS ORIGINAL CONDITION. FINISH AND PAINT DAMAGED AREAS, PAINT SHALL MATCH EXISTING.
10. PVC CONDUITS WILL BE PERMITTED IN UNDERGROUND APPLICATIONS EXCEPT FEEDERS OR BRANCH CIRCUITS TO PATIENT CARE AREAS.
11. ALL EXTERIOR WALL MOUNTED JUNCTION BOXES SHALL BE NEMA-3R.
12. PROVIDE UPDATED, TYPED PANELBOARD SCHEDULES FOR ALL THE ELECTRICAL PANELS LOCATED IN THE ELECTRICAL ROOMS. PANEL SCHEDULES SHALL REFLECT THE CORRECT ROOM NAMES AND NUMBERS AND ANY CIRCUIT CHANGES MADE IN THE FIELD.
13. ROOF PENETRATIONS TO ROOF MOUNTED EQUIPMENT MUST BE WITHIN EQUIPMENT CURBS. STUB-UP TO ABOVE ROOF THRU SIDE OF CURB FOR EXTERNAL EQUIPMENT CONNECTIONS (TYPICAL). DO NOT RUN CONDUIT IN AIR SUPPLY OR RETURN AIR OPENINGS.
14. PROVIDE CONDUITS FOR ALL H.V.A.C. SYSTEM CONTROL WIRING. PROVIDE 3/4" CONDUIT FROM EACH A.H.U. UNIT TO ASSOCIATED THERMOSTAT. PROVIDE 3/4" CONDUIT WIRE AND CONDUITS FOR EXHAUST FANS CONTROL. SEE MECHANICAL DRAWINGS FOR LOCATION OF THERMOSTATS AND MECHANICAL EQUIPMENT.
15. ALL CONDUITS PENETRATING A SMOKE WALL SHALL BE RIGID STEEL AND HAVE 3" CLEARANCE ALL AROUND THE CONDUIT TO ANY OBSTRUCTION TO ALLOW FOR PROPER SEALING OF PENETRATIONS. ALL NURSE CALL STATIONS MOUNTED ON SMOKE WALLS SHALL HAVE SEPARATE DRYWALL ENCLOSURES ON ALL SIDES AND BACK. CONDUITS SHALL SMOKE WALLS SHALL HAVE SEPARATE DRYWALL ENCLOSURES ON ALL SIDES AND BE SUPPORTED WITHIN 12" FROM BOTH SIDES OF SMOKE WALL (TYPICAL).
16. ALL PANELBOARDS, DISCONNECT SWITCHES AND COMBINATION MOTOR STARTERS SHALL HAVE A MINIMUM OF 3'-0" WORKING CLEARANCE FOR 120/208V, AND 4'-0" WORKING CLEARANCE FOR 277/480V.
17. FOR 120V CIRCUITS, PROVIDE # 12 AWG FOR ANY CIRCUIT OVER 60'-0" IN LENGTH AND #10 AWG FOR ANY CIRCUIT OVER 160'-0" ON A 20A CIRCUIT BREAKER.
18. ALL RECEPTACLES AND COVER PLATES FOR DEVICES CONNECTED TO THE EMERGENCY SYSTEM SHALL BE RED IN COLOR, TYPICAL THROUGHOUT. COVERPLATES SHALL BE ENGRAVED "PANEL & CIRCUIT No."
19. ALL BRANCH CIRCUITS SERVING PATIENT CARE AREAS SHALL BE IN METAL RACEWAY. PVC CONDUIT OR MC CABLE WILL NOT BE ALLOWED IN PATIENTS CARE AREAS.
20. INSTALL A GREEN EQUIPMENT GROUND WIRE IN ALL CONDUITS DEVICES AND EQUIPMENT BONDING SHALL BE INSTALLED IN ACCORDANCE WITH N.E.C. REQUIREMENTS. GROUNDING WIRES SHALL BE SIZED IN ACCORDANCE TO N.E.C.
21. ALL FIRE ALARM AND EMERGENCY POWER JUNCTION BOXES, COVERS AND CONDUITS IN CEILING SPACE AND ELECTRICAL ROOMS SHALL BE PAINTED AS FOLLOWS:

    CRITICAL BRANCH – ORANGE
    LIFE SAFETY BRANCH – YELLOW
    EQUIPMENT BRANCH – GREEN
    FIRE ALARM – RED

22. FLEXIBLE STEEL CONDUIT MAY BE USED FOR CONNECTIONS TO RECESSED LIGHTING FIXTURES (MAXIMUM LENGTH 6-FEET) AND TO MOTORS (MAXIMUM LENGTH 18 INCHES). ALL FLEXIBLE CONDUIT CONNECTIONS SHALL BE PROVIDED WITH A GREEN INSULATED GROUND WIRE. A TOTAL OF SIX FEET MAXIMUM BETWEEN THE BRANCH PANELBOARD AND THE LAST OUTLET ON ANY CIRCUIT IS ACCEPTABLE. THE USE OF FLEXIBLE CONDUIT SHALL BE LIMITED TO JUNCTION BOX TO LIGHTING FIXTURES, JUNCTION BOX TO VIBRATING EQUIPMENT (MOTOR, FAN, ETC.) AND SHALL BE MINIMIZED AND ONLY USED WHERE ABSOLUTELY REQUIRED.
23. PROVIDE GREEN INSULATION GROUND FOR ALL GROUNDING TYPE RECEPTACLES AND EQUIPMENT OF ALL VOLTAGES. IN ADDITION TO GROUNDING STRAP CONNECTION TO METALLIC OUTLET BOXES, A SUPPLEMENTAL GROUNDING WIRE AND SCREW EQUAL TO RACO NO. 983 SHALL BE PROVIDED TO CONNECT RECEPTACLE GROUND TERMINAL TO THE BOX.
24. PERFORM GROUND INTEGRITY TEST AND EQUIPONTETIAL IN ACCORDANCE WITH NEC 517-11,13,14, AND 16 AND NFPA-99, CHAPTER 3.5. SUBMIT (3) THREE SIGNED COPIES OF REPORT. EQUIPOTENTIAL GROUNDING TEST DOCUMENTATION AND DEMONSTRATION OF THE EQUIPOTENTIAL TEST SHALL BE PROVIDED AT THE FINAL AHCA SURVEY. USE A HAMPDEN #MOV TESTER OR EQUAL. TECHNICIAN AND CALIBRATED TESTER SHALL BE PRESENT AT AHCA FINAL INSPECTION.
25. THE SIZE OF WIRING, CONDUIT, DISCONNECT AND FUSES FOR HVAC EQUIPMENT IS BASED ON THE MECHANICAL BASIS TO OF DESIGN. COORDINATE WITH MECHANICAL CONTRACTOR VERIFY ELECTRICAL REQUIREMENTS FOR EQUIPMENT SUPPLIED. IF THE BASIS OF DESIGN IS NOT USED. THE CONTRACTOR SHALL RESIZE THESE ITEMS PER THE NATIONAL ELECTRICAL CODE AND MANUFACTURER'S RECOMMENDATIONS AND SHALL SHALL SUBMIT THIS DATA WITH THE HVAC SUBMITTAL FOR APPROVAL.
26. PROVIDE ALL THE REQUIRED WIRING AND CONDUIT TO CONNECT MOTORIZED DAMPERS AND INTERLOCK HVAC EQUIPMENT. SEE MECHANICAL FOR EXACT PAIRING.
27. VERIFY WITH OWNER FOR EQUIPMENT'S ELECTRICAL CHARACTERISTICS PRIOR TO ROUGH IN.
28. PROVIDE NURSE CALL DOCUMENTATION AND CERTIFICATIONS. NURSE CALL TECHNICIAN SHALL BE PRESENT AT FINAL INSPECTION.
29. PROVIDE DUCT SMOKE DETECTOR SENSITIVITY TEST REPORTS AND FIRE ALARM CERTIFICATION DOCUMENTS. TEST REPORT SHALL BE AVAILABLE FOR INSPECTIONS REVIEW AT FINAL SURVEY. FIRE ALARM TECHNICIAN SHALL BE PRESENT AT FINAL INSPECTION.
30. VERIFY THE OPERATION AND FUNCTION OF EXISTING GENERATOR. ALL FUNCTIONS SHALL MEET NFPA. A GENERATOR TECHNICIAN SHALL BE PRESENT AT FINAL INSPECTION TO DEMONSTRATE THE AVAILABILITY OF EMERGENCY POWER.
31. CONTRACTOR SHALL INCLUDE AS PART OF BASE BID COST FOR ADDITIONAL ELECTRICAL WORK AS MAY BE NEEDED ON THIS PROJECT TO INCLUDE (3) FIRE ALARM SPEAKER STROBES, (3) FIRE ALARM DUCT DETECTORS, (3) TYPE 'E' LIGHTING FIXTURES, (3) DATA OUTLETS (5 CAT6 JACKS EACH), AND 4 DUPLEX RECEPTACLES. INCLUDE UP TO 150 FEET CONDUIT AND ASSOCIATED CABLES PER OUTLET/DEVICE. IN ADDITION TO ABOVE WORK PROVIDE 300 FEET OF CONDUIT AND 1000 FEET OF THHN #8 CABLE. ALLOWANCES FOR ADDITIONAL WORK SHALL INCLUDE REQUIRED BOXES, FITTINGS, SUPPORT, DRILLING OF WALLS/BEAMS, PAINTING, REPAIRING OF EXISTING SURFACES, FIRE STOPPING AND ALL HARDWARE AND ACCESSORIES REQUIRED FOR A COMPLETE INSTALLATION. ALLOWANCES SHALL ALSO INCLUDE ALL REQUIRED PROGRAMMING AND TESTING. LOCATION OF DEVICES TO BE DETERMINED DURING CONSTRUCTION. UNUSED DEVICES SHALL BE DELIVERED TO THE VA HOSPITAL AS SPARE PARTS.

DEMOLITION NOTES:

1. THERE SHALL NOT BE ANY INTERRUPTION TO SERVICES TO THE EXISTING BUILDINGS WITHOUT PRIOR SCHEDULING OF SUCH OUTAGES WITH THE OWNER'S REPRESENTATIVE.
2. THE CONTRACTOR SHALL NOT TAKE POSSESSION OF OR DISPOSE OF ANY SALVAGEABLE ITEMS IN ASSOCIATION WITH THE WORK. ALL SALVAGEABLE ITEMS SHALL BE THE OWNER'S PROPERTY AT HIS OPTION. ALL UNSALVAGEABLE EQUIPMENT AND MATERIALS SHALL BECOME THE PROPERTY OF THE CONTRACTOR AND SHALL BE REMOVED FROM THE SITE.
3. THE ELECTRICAL CONTRACTOR SHALL MAINTAIN ACCURATE RECORDS OF ANY MODIFICATIONS TO EXISTING SYSTEMS AND SHALL UPON COMPLETION, DELIVER "AS-BUILT" DRAWINGS TO THE OWNER, INDICATING ANY SUCH CHANGES.
4. WHERE FEEDERS ARE ABANDONED, WIRE SHALL BE PULLED OUT AND ALL EXPOSED SECTIONS OF CONDUITS REMOVED. ALL SWITCHES, PANELS, ETC. SHALL BE REMOVED. ALL CONCEALED CONDUITS SHALL BE CAPPED AT POINT OF CONCEALMENT.
5. ALL EXISTING DEVICES AND FIXTURES IN THE PATH OF RENOVATION OR BUILDING ADDITIONS SHALL BE REMOVED BY THE CONTRACTOR. CONTRACTOR SHALL BE RESPONSIBLE TO MAINTAIN EXISTING CIRCUITRY TO ALL REMAINING DEVICES AND FIXTURES. FOR EACH DEVICE OR FIXTURE REMOVED AT THE END OF A CIRCUIT, CONTRACTOR SHALL REMOVE WIRING FROM LAST REMAINING DEVICE, FOR EACH DEVICE OR FIXTURE REMOVED IN THE MIDDLE OF A CIRCUIT, CONTRACTOR SHALL REMOVE WIRING FROM FIRST DEVICE OR FIXTURE BEFORE AND AFTER REMOVED DEVICE AND FIXTURE. NEW WIRING, SIZED THE SAME AS EXISTING, SHALL BE PULLED BETWEEN THE TWO REMAINING DEVICES OR FIXTURES.
6. CONTRACTOR MAY REUSE EXISTING CONDUIT SYSTEM WHERE APPLICABLE, PROVIDING THE REUSED SYSTEMS MEET CURRENT CODES. REMOVE ALL UNUSED SURFACE MOUNTED CONDUIT. UNUSED CONDUITS STUBBING UP FROM FLOOR SHALL BE CUT FLUSH WITH FLOOR.
7. EXISTING EQUIPMENT NOT SHOWN ON THESE PLANS AND NOT REMOVED BY OTHER TRADES SHALL BE RECONNECTED TO PANELS. EXISTING ELECTRICAL OR MECHANICAL EQUIPMENT TO REMAIN THAT HAS TO BE DISCONNECTED FOR CONSTRUCTION SHALL BE REINSTALLED.
8. ELECTRICAL DRAWINGS DO NOT INDICATE ALL THE EXISTING INSTALLATIONS.
9. ALL EXISTING SWITCHES, RECEPTACLES, LIGHTING FIXTURES, TELEPHONE OUTLETS, ETC. THAT DO NOT INTERFERE WITH RENOVATIONS SHALL REMAIN.
10. CONTRACTOR SHALL VISIT THE SITE PRIOR TO PREPARING HIS BID AND DETERMINE THE EXTENT OF EXISTING EQUIPMENT AND WIRING TO ACCOMODATE CHANGES AND ADDITIONS. ALL THE NECESSARY REROUTING, RELOCATING AND/OR REMOVAL OF EXISTING EQUIPMENT, WIRING ETC. SHALL BE INCLUDED IN THE SCOPE OF THIS WORK. ANY VARIATION FROM EXISTING CONDITIONS SHALL BE INCLUDED UNDER THIS CONTRACT.

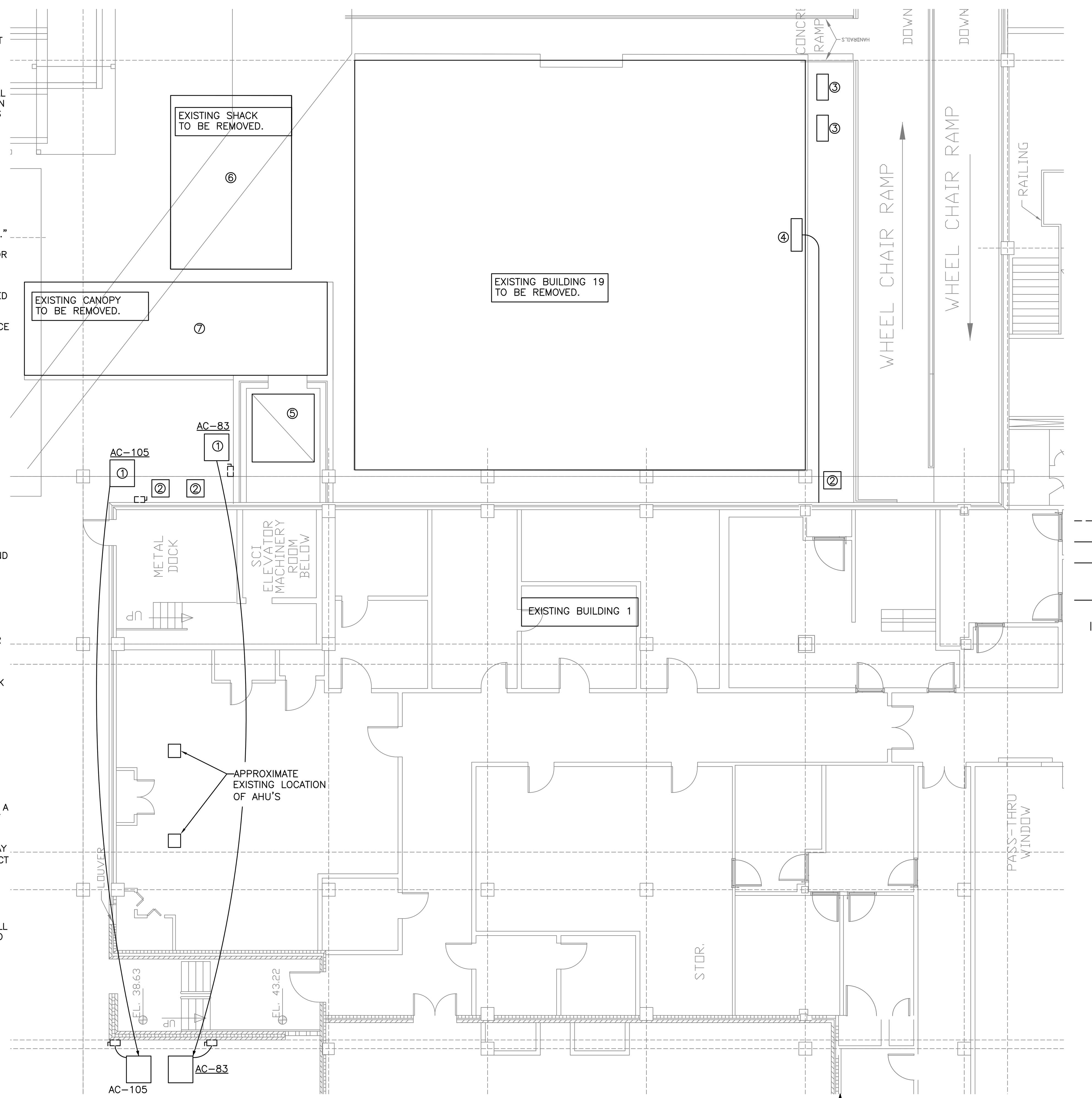

GROUND FLOOR DEMOLITION PLAN - ELECTRICAL

SCALE: 1/8" = 1'-0"

ELECTRICAL LEGEND

- FLUORESCENT INDIRECT LIGHTING FIXTURE – RECESSED WITH JUNCTION BOX AND FLEXIBLE METALLIC CONDUIT CONNECTION.
- FLUORESCENT INDIRECT LIGHTING FIXTURE – RECESSED WITH JUNCTION BOX AND FLEXIBLE METALLIC CONDUIT CONNECTION. FIXTURE CONNECTED ON EMERGENCY POWER (CRITICAL BRANCH).
- FLUORESCENT INDIRECT LIGHTING FIXTURE – RECESSED WITH JUNCTION BOX AND FLEXIBLE METALLIC CONDUIT CONNECTION. FIXTURE CONNECTED ON EMERGENCY POWER (LIFE SAFETY BRANCH).
- FLUORESCENT LIGHTING FIXTURE – SURFACE MOUNTED.
- FLUORESCENT LIGHTING FIXTURE – SURFACE MOUNTED. CONNECTED ON EMERGENCY POWER (CRITICAL BRANCH).
- FLUORESCENT LIGHTING FIXTURE – SURFACE MOUNTED. CONNECTED ON EMERGENCY POWER (LIFE SAFETY BRANCH).
- LED DOWNLIGHT – RECESSED.
- LED DOWNLIGHT – RECESSED. CONNECTED ON EMERGENCY POWER (CRITICAL BRANCH).
- LED DOWNLIGHT – RECESSED. CONNECTED ON EMERGENCY POWER (LIFE SAFETY BRANCH).
- EXIT LIGHT – PROVIDE ARROWS AS INDICATED, SHADING DENOTES FACE OPERATION. DO NOT SWITCH.
- $ — TOGGLE SWITCH – SINGLE POLE – QUIET TYPE 20 AMP, 120/277 VOLT, HUBBELL NO. HBL1221I WITH NO. N1P1I COVERPLATE – 46" MOUNTING HEIGHT, U.N.O.
- $3 — TOGGLE SWITCH – THREE POLE – QUIET TYPE 20 AMP, 120/277 VOLT, HUBBELL NO. HBL1223I WITH NO. N1P1I COVERPLATE – 46" MOUNTING HEIGHT, U.N.O.
- $DR — DIMMER SWITCH – LUTRON "NOVA" SERIES, 46" MOUNTING HEIGHT, U.N.O. RED COVER.
- LOW VOLTAGE DIMMER SWITCH, 46" MOUNTING HEIGHT, U.N.O.
- ONE BUTTON LOW VOLTAGE SWITCH, 46" MOUNTING HEIGHT, U.N.O.
- TWO BUTTON LOW VOLTAGE SWITCH, 46" MOUNTING HEIGHT, U.N.O.
- DIGITAL TIME SWITCH, 46" MOUNTING HEIGHT, U.N.O., WATTSTOPPER #TS-400-W-U
- DM — LIGHTING CONTROL DIGITAL DIMMING MODULE. LOCATE IN CEILING SPACE. BACNET CONTROL.
- LC — LIGHTING CONTROL. ROOM CONTROLLER AND DIGITAL NETWORK BRIDGE. LOCATE IN CEILING SPACE. BACNET CONTROL.
- M — CEILING MOUNTED LOW VOLTAGE OCCUPANCY SENSOR-WATTSTOPPER LMDC-100-U.
- $R — TOGGLE SWITCH – SINGLE POLE – QUIET TYPE 20 AMP, 120/277 VOLT, HUBBELL NO. HBL1221R WITH NO. N1P1R COVERPLATE – 46" MOUNTING HEIGHT, U.N.O.
- $M — TOGGLE SWITCH – SINGLE POLE, 20 AMP, 120/277V, MOTOR RATED, GROUNDING TYPE, MOUNT AT EQUIPMENT HOUSING.
- OCCUPANCY SENSOR – SWITCH, 120/277 VOLT, ADJUSTABLE DELAY OFF. WATT STOPPER # LMSW-102-I, IVORY COVERPLATE. 46" MOUNTING HEIGHT, U.N.O.
- DUPLEX RECEPTACLE HOSPITAL GRADE – 20 AMP, 120 VOLT, 3 WIRE GROUNDING, HUBBELL NO. HBL8300I WITH NO. SS8 COVERPLATE, 18" MOUNTING HEIGHT, U.N.O.
- DUPLEX RECEPTACLE – SAME AS ABOVE EXCEPT MOUNTED ABOVE COUNTER, 42" MOUNTING HEIGHT, U.N.O.
- DOUBLE DUPLEX RECEPTACLES HOSPITAL GRADE – (2) TWO 20 AMP, 120 VOLT, 3 WIRE GROUNDING, HUBBELL NO. HBL8300I WITH NO. SS82 COVERPLATE, 18" MOUNTING HEIGHT, U.N.O.
- DUPLEX RECEPTACLE HOSPITAL GRADE – 20 AMP, 120 VOLT, 3 WIRE GROUNDING, HUBBELL NO. HBL8300R WITH NO. SS8 COVERPLATE, ON EMERGENCY POWER, 18" MOUNTING HEIGHT, U.N.O.
- SPECIAL PURPOSE RECEPTACLE COMPLETE WITH COVERPLATE. RECEPTACLE TO MATCH EQUIPMENT PLUG.
- DUPLEX RECEPTACLE WITH GROUND FAULT INTERRUPTER HOSPITAL GRADE, 20 AMP, 120 VOLT, 3 WIRE GROUNDING. HUBBELL NO. GFR8300ITR WITH NO. NP26I COVERPLATE, 44" MOUNTING HEIGHT, U.N.O.
- FLUSH MOUNTED POKE THRU OUTLET – (5) CAT 6 DATA CABLE JACKS AND A 20 AMP, 120 VOLT, DUPLEX POWER RECEPTACLE, HUBBELL SERIES SIPTAL.
- J — MODULAR FURNITURE POWER CONNECTION – 12" AFF PROVIDE 4" SQUARE BOX IN WALL. ROUTE LFMC FROM BOX TO FURNITURE CONNECTION POINT. COORDINATE POWER CONNECTIONS AND NUMBER OF WIRES REQUIRED FOR SYSTEM FURNITURE PRIOR TO PULLING WIRE.
- 20 J — MODULAR FURNITURE COMMUNICATION CONNECTION – 12" AFF PROVIDE 4" SQUARE BOX IN WALL WITH (2) 1 1/4" CONDUITS TO CEILING SPACE. ROUTE LFMC FROM BOX TO FURNITURE CONNECTION POINT. ROUTE DATA CABLES TO TERMINATION LOCATIONS WITHIN FURNITURE. NUMBER INDICATES QUANTITY OF CAT 6 DATA/VOICE CABLES.
- TELEPHONE/DATA OUTLET – 4" SQUARE 2 1/8" DEEP JUNCTION BOX WITH 1-GANG EXTENSION RING AND CAT 6 RJ-45 CONNECTORS. OUTLETS VOID OF NUMBER ARE (5) RJ-45 JACKS. 18" MOUNTING HEIGHT, U.N.O. (5) CAT 6 CABLES TO MTR. PROVIDE 1" CONDUIT FROM BOX TO CEILING SPACE.
- J — JUNCTION BOX SIZE PER NEC.
- MOTOR, FAN, PUMP OR AIR CONDITIONING UNIT CONNECTION PER NEC.
- LIGHTING AND/OR POWER PANELBOARD.
- WIRING IN CONDUIT, RUN CONCEALED UNDER FLOOR OR UNDERGROUND.
- WIRING IN CONDUIT, RUN CONCEALED ABOVE CEILING OR IN WALLS.
- WIRING IN CONDUIT, RUN CONCEALED ABOVE CEILING OR IN WALLS – EMERGENCY POWER.
- HOMERUN TO PANELBOARD – NUMBER OF ARROWS DENOTES QUANTITY OF CIRCUITS. CROSSMARKS INDICATE QUANTITY OF NO. 12 CONDUCTORS. RUNS VOID OF CROSSMARKS ARE 1/2 INCH CONDUIT, 3 NO. 12, U.N.O. DO NOT COMBINE HOMERUNS EXCEPT AS SPECIFICALLY INDICATED ON THE PLAN.

AC	ABOVE COUNTER
WP	DENOTES WEATHERPROOF – MOUNT RECEPTACLES HORIZONTALLY AND PROVIDE TAYMAC 60350 COVERPLATE, FOR SWITCHES PROVIDE TAYMAC 40110 COVERPLATE.
NL	NIGHT LIGHT. DO NOT SWITCH.
U.N.O.	UNLESS NOTED OTHERWISE.
A.F.F.	ABOVE FINISHED FLOOR.
3 60/40	DISCONNECT SWITCH, "3 60/40" DENOTES 3 POLE, 60 AMP, 40 AMP FUSES.
	EMERGENCY POWER OFF PUSH BUTTON (EPO).
S	CEILING MOUNTED PAGING SPEAKER WITH BACK BOX. PROVIDE WIRES IN CONDUIT.
S	WALL MOUNTED PAGING SPEAKER – 9'-0" MOUNTING HEIGHT.
CR	CARD READER J-BOX. PROVIDE 3/4" C. TO ACCESSIBLE CEILING SPACE, U.N.O. COORDINATE LOCATION AND MOUNTING HEIGHT WITH OWNER AND SYSTEM PROVIDER/INSTALLER.
D	TOUCHLESS DOOR ENTRY SENSOR.
DC	DOOR CONTROL IN CEILING SPACE.
TV	CABLE TV OUTLET – COAXIAL CABLE CONNECTOR AND IVORY COVERPLATE. PROVIDE 3/4" C. TO CEILING SPACE.
	CABLE TRAY IN CEILING SPACE.
	CABLE RUNNER MOUNTED AT 24" ABOVE ITR. PROVIDE CABLE FALL ADAPTER EXTENDED TO ITR.

NURSE CALL SYSTEM

N	BEDSIDE NURSE CALL STATION WITH PULL CORD, 42 INCH MOUNTING HEIGHT.
E	EMERGENCY/LAVATORY NURSE CALL STATION WITH PULL CORD REACHING TO FLOOR. 42 INCH MOUNTING HEIGHT.
B	CODE BLUE STATION. COORDINATE WITH OWNER FOR MOUNTING HEIGHT.
NM	NURSE CALL MASTER STATION.
N/C	BEDSIDE STATION. AUDIO/VIDEO
	NURSE CALL DUTY STATION. MOUNTED 54 INCHES ABOVE FLOOR.
D	NURSE CALL DOME LIGHT.
Z	NURSE CALL ZONE LIGHT.
E	EMERGENCY CALL STAFF STATION. 42" MOUNTING HEIGHT.
	NURSE CALL STAFF STATION. 54" MOUNTING HEIGHT.

FIRE ALARM

F.A.C.P.	DENOTES FIRE ALARM CONTROL PANEL.
F.A.A.P.	DENOTES FIRE ALARM ANNUNCIATOR PANEL.
	FLUSH MOUNTED MANUAL FIRE ALARM PULL STATION, 46 INCH MOUNTING HEIGHT.
	SEMI-FLUSH MOUNTED FIRE ALARM SPEAKER/VISUAL WARNING DEVICE, 80 INCH MOUNTING HEIGHT. 110 INDICATES 110 CANDELA STROBE. UTILIZE 75 CANDELA IN SMALL ROOMS AND CORRIDORS. USE 110 CANDELA IN ROOMS LARGER THAN 30' IN WIDTH OR LENGTH.
D	DUCT MOUNTED SMOKE DETECTOR, MOUNTED IN A/C DUCT. SEE MECHANICAL DRAWING FOR MOUNTING LOCATION AND QUANTITY.
RL	DUCT MOUNTED SMOKE DETECTOR REMOTE INDICATOR WITH RESET/TEST CAPABILITY, FLUSH MOUNTED IN CEILING. LABEL COVERPLATE TO INDICATE RESPECTIVE A/C UNIT.
	CEILING MOUNTED SMOKE DETECTOR.
R	AIR CONDITIONING/HEAT PUMP SHUT DOWN RELAY.
FS	FIRE ALARM SPRINKLER FLOW SWITCH.
TS	FIRE ALARM SPRINKLER VALVE TAMPER SWITCH.
	SEMI-FLUSH FIRE ALARM VISUAL WARNING DEVICE, WALL MOUNTED. 80 INCH MOUNTING HEIGHT. (FROM FLOOR TO BOTTOM OF DEVICE)
DH	FLUSH WALL MOUNTED DOOR HOLDING DEVICE – 70 INCH MOUNTING HEIGHT.

NOTES:

① EXISTING A/C UNITS TO BE RELOCATED. PROVIDE ALL CONDUITS, CABLES, AND ALL OTHER REQUIRED MATERIALS FOR A COMPLETE RELOCATION OF ELECTRICAL.

② EXISTING CONDENSING UNITS TO BE RELOCATED UNDER SEPARATE CONTRACT.

③ EXISTING A/C UNITS TO BE REMOVED. REMOVE CABLES AND SURFACE MOUNTED CIRCUITS.

④ EXISTING BUILDING ELECTRICAL SERVICE TO BE REMOVED. PULL ELECTRICAL SERVICE BACK TO SOURCE AT SWITCHGEAR.

⑤ EXISTING ELEVATOR AND ASSOCIATED ELECTRICAL TO BE REMOVED. PULL ELECTRICAL SERVICE BACK TO SOURCE AT SWITCHGEAR AND REMOVE EXPOSED CONDUITS.

⑥ EXISTING SHACK. REMOVE ALL ASSOCIATED ELECTRICAL. PULL ELECTRICAL SERVICE BACK TO SOURCE AND REMOVE EXPOSED CONDUITS.

⑦ EXISTING CANOPY ND ASSOCIATED ELECTRICAL TO BE REMOVED. PULL ELECTRICAL BACK TO SOURCE AND REMOVE EXPOSED CONDUITS.

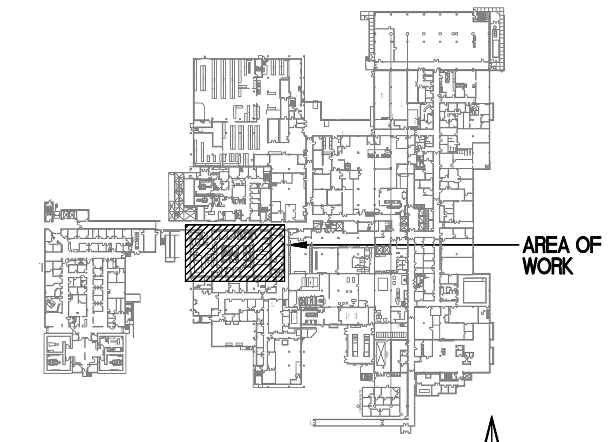

KEY PLAN

NOT TO SCALE

04-18-12 MEDICAL EQUIPMENT AND INTERIOR DESIGN REVISIONS

REVISION	DATE
65% SUBMITTAL	02/19/11
95% SUBMITTAL	03/29/11
100% SUBMITTAL	04/13/11
CONSTRUCTION SET	05/02/11
MEDICAL EQUIPMENT AND INTERIOR DESIGN REVISIONS	04/18/12

CONSULTANTS:

HADDAD ENGINEERING, INC.
2955 HARTLEY ROAD, SUITE 205 JACKSONVILLE, FL. 32257
TELEPHONE - (904) 262-5066 FAX - (904) 262-7139
CERTIFICATE OF AUTHORIZATION NO. 4000

NAMIR A. HADDAD P.E.
LICENSE NO. 31967

ARCHITECT/ENGINEERS:

ttv architects, inc.
115 EAST FORSYTH ST
JACKSONVILLE, FLORIDA 32202
T 904.798.8333
F 904.798.8335
www.ttvarch.com
FL Lic#AA0002609

Drawing Title: **Electrical Legend, Schedules, Details, and Demolition Site Plan**

Approved: Project Director

Project Title: SPECIALTY TREATMENT EXPANSION PROJECT- BUILDING #1

Location: JAMES A. HALEY VETERANS' HOSPITAL

Date	Checked	Drawn
02/19/11	NH	WH

Project Number: 673-CSI-100

Building Number: 1

Drawing Number: EI100

Dwg. 001 of 020

Office of Construction and Facilities Management

Department of Veterans Affairs

VA FORM 08-6231

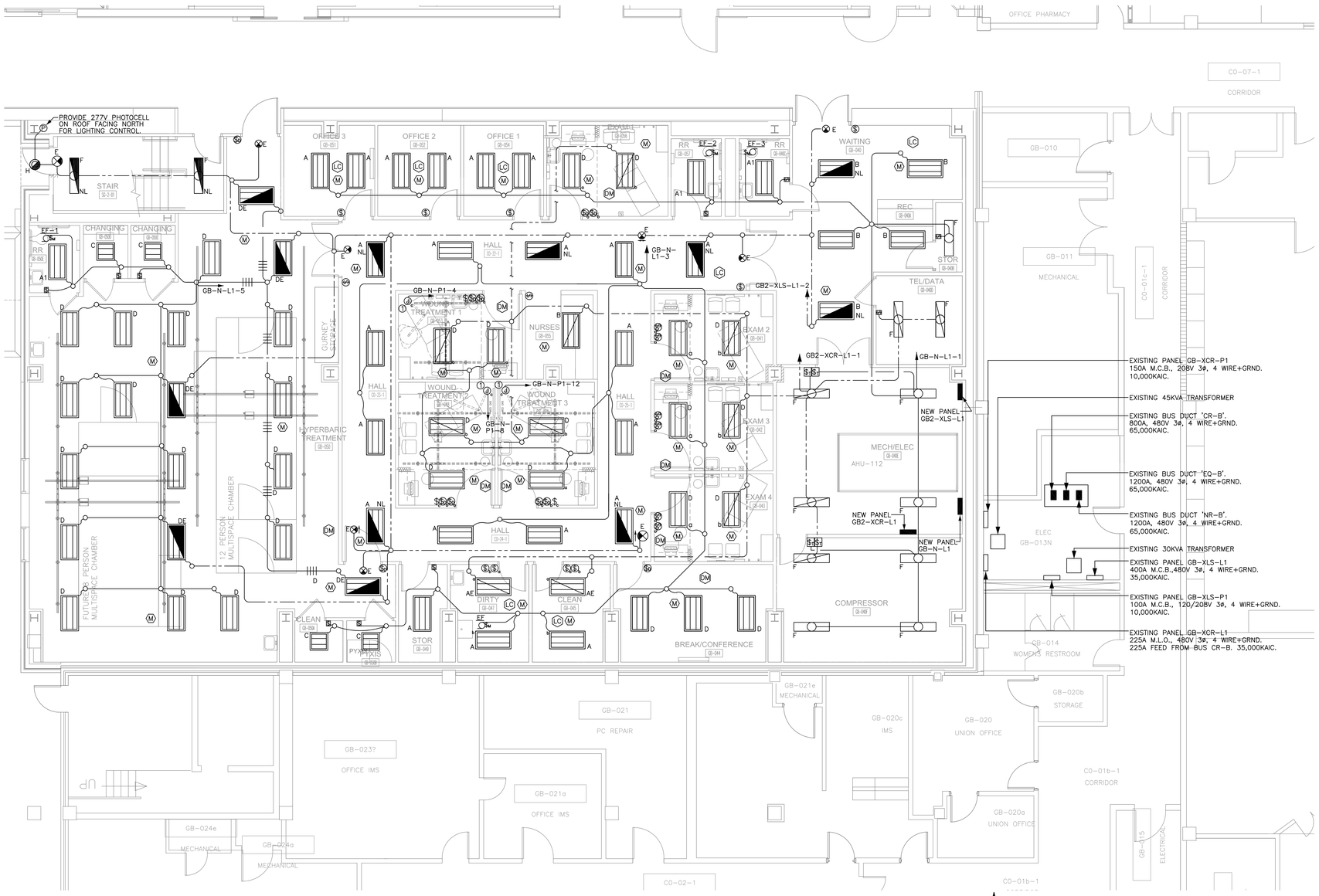

LIGHTING FIXTURE SCHEDULE

TYPE	MANUFACTURER	CATALOGUE NUMBER	LAMP SIZE	LAMP QUAN	VOLTS	MOUNTING HEIGHT	REMARKS	NOTES
A	DAY-BRITE	2AVG-225-PMW-UNV 1/2EB10R	25W, T8, 4100K	2	120/277	CEILING	2X4 RECESSED INDIRECT FLUORESCENT - 1 BALLAST, GRID MOUNT	2, 3, 4
A1	DAY-BRITE	2AV/FMA24-225-PMW-UNV 1/2EB10R	25W, T8, 4100K	2	120/277	CEILING	2X4 RECESSED INDIRECT FLUORESCENT - 1 BALLAST, FLANGE MOUNT	2, 3
B	DAY-BRITE	2AVG-325-PMW-UNV 1/3EB10R	25W, T8, 4100K	3	120/277	CEILING	2X4 RECESSED INDIRECT FLUORESCENT - 1 BALLAST, GRID MOUNT	2, 3
C	DAY-BRITE	2AVG-224HO-PMW-UNV 1/2EB10R	24W, T5HO, 4100K	2	120/277	CEILING	2X2 RECESSED INDIRECT FLUORESCENT - 1 BALLAST, GRID MOUNT	2, 3
D	DAY-BRITE	2AVG-325-PMW-UNV EBD	25W, T8, 4100K	3	120/277	CEILING	2X4 RECESSED INDIRECT FLUORESCENT - DIMMING BALLAST	4, 5
E	BEGHELLI	VA5R-SA-ATX	WITH UNIT		120/277	CEILING	EXIT SIGN	1
F	DAY-BRITE	CAN225UNV	25W, T8, 4100K	2	120/277	CEILING	1X4 FLUORESCENT WRAPAROUND	2, 3, 4
G	NITE-BRITES	WCM-070-M-MT-LP-PEC-MT	70W MH	1	277	CEILING	EXTERIOR LIGHTING FIXTURE - PHOTOCELL	
H	OMEGA	OM6LED39277-R630KMDCS	2000 LUM LED		277	CEILING	7" LED DOWN LIGHT - TILE CEILING - DIMMING	

LIGHT FIXTURE SCHEDULE NOTES:

1. SINGLE OR DOUBLE FACE AS INDICATED ON PLANS. IF CEILING EXCEEDS 9'-0" WALL MOUNT FIXTURE ABOVE DOOR.
2. ALL FLUORESCENT LIGHT FIXTURES SHALL BE EQUIPPED WITH A PROGRAM RAPID START ELECTRONIC BALLAST FOR PARALLEL OPERATION.
3. ALL T8 LAMPS SHALL BE PHILIPS EXTRA LONG LIFE #F25T8-ADV-835-EXWALTO.
4. FIXTURES TYPE 'AE', 'DE' AND 'FE' SHALL BE THE SAME AS FIXTURE TYPE 'A', 'D' AND 'F' EXCEPT EQUIPPED WITH A BODINE RELAY.
5. DIMMING BALLAST AND DIMMING TYPE EXTRA LONG LIFE LAMPS. PROVIDE 0-10 VOLTS DIMMING BALLAST TO MATCH WATTSTOPPER DIMMING CONTROL.

GROUND FLOOR ELECTRICAL PLAN - LIGHTING

SCALE: 3/16" = 1'-0"

NOTES:

1. CONTRACTOR SHALL PROVIDE "VISIONARY SINGLE CEILING SURGERY LIGHT" MODEL #0212040. PROVIDE 120V CIRCUIT AS SHOWN. PROVIDE FIXTURE SUPPORT PER MANUFACTURER'S INSTRUCTIONS.
2. PROVIDE PLENUM CONTROL CABLE TO LOOP LIGHTING DIMMING CONTROL/LIGHTING CONTROL TO EMCS PANEL. SUPPORT FROM BUILDING STRUCTURE AT INTERVALS NOT TO EXCEED 24".

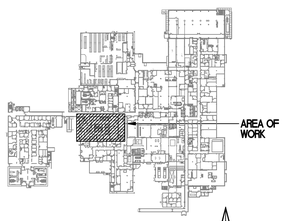

KEY PLAN
NOT TO SCALE

04-18-12 MEDICAL EQUIPMENT AND INTERIOR DESIGN REVISIONS

REVISION	DATE
65% SUBMITTAL	02/19/11
95% SUBMITTAL	03/29/11
100% SUBMITTAL	04/13/11
CONSTRUCTION SET	05/02/11
MEDICAL EQUIPMENT AND INTERIOR DESIGN REVISIONS	04/18/12

CONSULTANTS:

HADDAD ENGINEERING, INC.
2955 HARTLEY ROAD, SUITE 205 JACKSONVILLE, FL. 32257
TELEPHONE - (904) 262-5066 FAX - (904) 262-7139
CERTIFICATE OF AUTHORIZATION NO. 4000

NAMIR A. HADDAD P.E.
LICENSE NO. 31987

ARCHITECT/ENGINEERS:

ttv architects, inc.
110 EAST FORSYTH ST.
JACKSONVILLE, FLORIDA 32202
T: 904.798.8333
F: 904.798.8335
www.ttvarch.com
FL Lic.#AA0002609

Drawing Title: GROUND FLOOR ELECTRICAL PLAN - LIGHTING

Approved: Project Director

Project Title: SPECIALTY TREATMENT EXPANSION PROJECT- BUILDING #1

Location: JAMES A. HALEY VETERANS' HOSPITAL

Date: 02/19/11 | Checked: NH | Drawn: WH

Project Number: 673-CSI-100

Building Number: 1

Drawing Number: EL100

Dwg. 002 of 020

Office of Construction and Facilities Management

Department of Veterans Affairs

VA FORM 08-6231

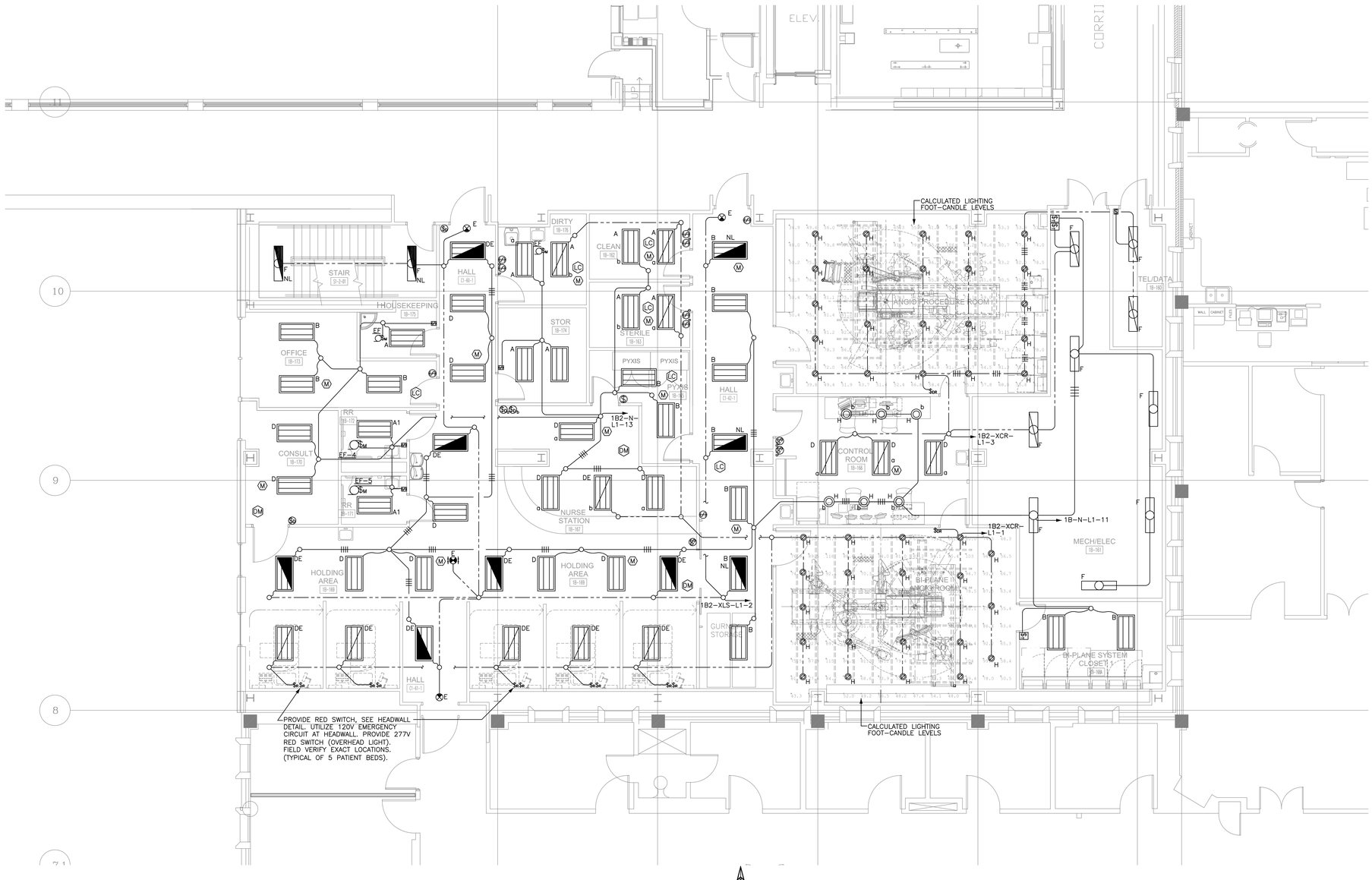

FIRST FLOOR ELECTRICAL PLAN - LIGHTING

SCALE: 3/16" = 1'-0"

NOTES:

(2) PROVIDE PLENUM CONTROL CABLE TO LOOP LIGHTING DIMMING CONTROL/LIGHTING CONTROL TO EMCS PANEL. SUPPORT FROM BUILDING STRUCTURE AT INTERVALS NOT TO EXCEED 24".

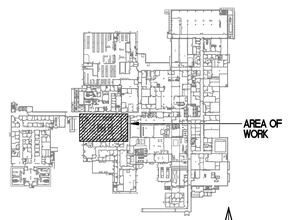

KEY PLAN

NOT TO SCALE

04-18-12 MEDICAL EQUIPMENT AND INTERIOR DESIGN REVISIONS

REVISION	DATE
65% SUBMITTAL	02/19/11
95% SUBMITTAL	03/29/11
100% SUBMITTAL	04/13/11
CONSTRUCTION SET	05/02/11
MEDICAL EQUIPMENT AND INTERIOR DESIGN REVISIONS	04/18/12

CONSULTANTS:

HADDAD ENGINEERING, INC.
2955 HARTLEY ROAD, SUITE 205 JACKSONVILLE, FL. 32257
TELEPHONE - (904) 262-5066 FAX - (904) 262-7139
CERTIFICATE OF AUTHORIZATION NO. 4000

NAMIR A. HADDAD P.E.
LICENSE NO. 31967

ARCHITECT/ENGINEERS:

ttv architects, inc.
115 EAST FORSYTH ST
JACKSONVILLE FLORIDA 32202
T 904.798.8333
F 904.798.8335
www.ttvarch.com
FL Lic#AA0002609

Drawing Title: FIRST FLOOR ELECTRICAL PLAN - LIGHTING

Approved: Project Director

Project Title: SPECIALTY TREATMENT EXPANSION PROJECT- BUILDING #1

Location: JAMES A. HALEY VETERANS' HOSPITAL

Date: 02/19/11 | Checked: NH | Drawn: WH

Project Number: 673-CSI-100

Building Number: 1

Drawing Number: EL101

Dwg. 003 of 020

Office of Construction and Facilities Management

Department of Veterans Affairs

VA FORM 08-6231

SECOND FLOOR ELECTRICAL PLAN - LIGHTING

SCALE: 3/16" = 1'-0"

NOTES:

② PROVIDE PLENUM CONTROL CABLE TO LOOP LIGHTING DIMMING CONTROL/LIGHTING CONTROL TO EMCS PANEL. SUPPORT FROM BUILDING STRUCTURE AT INTERVALS NOT TO EXCEED 24".

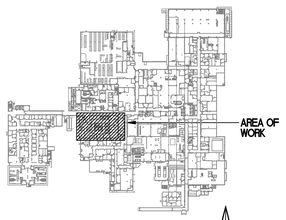

KEY PLAN

NOT TO SCALE

04-18-12 MEDICAL EQUIPMENT AND INTERIOR DESIGN REVISIONS

REVISION	DATE
65% SUBMITTAL	02/19/11
95% SUBMITTAL	03/29/11
100% SUBMITTAL	04/13/11
CONSTRUCTION SET	05/02/11
MEDICAL EQUIPMENT AND INTERIOR DESIGN REVISIONS	04/18/12

CONSULTANTS:

HADDAD ENGINEERING, INC.
2955 HARTLEY ROAD, SUITE 205 JACKSONVILLE, FL. 32257
TELEPHONE - (904) 262-5066 FAX - (904) 262-7139
CERTIFICATE OF AUTHORIZATION NO. 4000

NAMIR A. HADDAD P.E.
LICENSE NO. 31967

ARCHITECT/ENGINEERS:

ttv architects, inc.
115 EAST FORSYTH ST
JACKSONVILLE, FLORIDA 32202
T 904.798.8333
F 904.798.8335
www.ttvarch.com
FL Lic#AA0002609

Drawing Title: SECOND FLOOR ELECTRICAL PLAN - LIGHTING

Approved: Project Director

Project Title: SPECIALTY TREATMENT EXPANSION PROJECT- BUILDING #1

Location: JAMES A. HALEY VETERANS' HOSPITAL

Date	Checked	Drawn
02/19/11	NH	WH

Project Number: 673-CSI-100

Building Number: 1

Drawing Number: EL102

Dwg. 004 of 020

Office of Construction and Facilities Management

Department of Veterans Affairs

VA FORM 08-6231

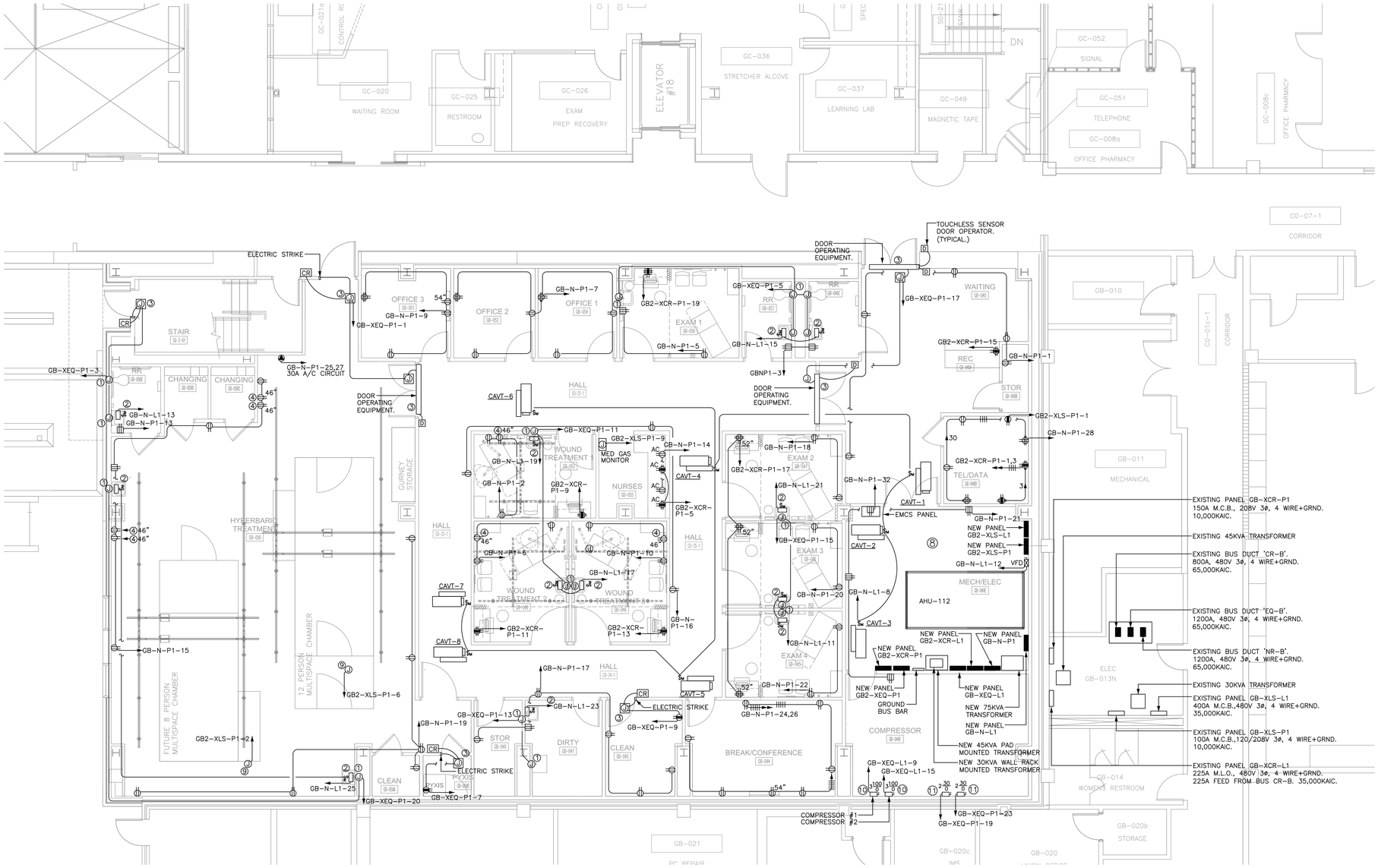

GROUND FLOOR ELECTRICAL PLAN - POWER

SCALE: 3/16" = 1'-0"

NOTES:

1. PROVIDE EMERGENCY CIRCUITING, CONDUIT, AND J-BOXES AS SHOWN TO SINK AND TOILET CONTROLS. PROVIDE WIRES, CONDUIT, AND J-BOXES AS REQUIRED TO PROVIDE A COMPLETE OPERATIONAL SYSTEM.
2. INSTANTANEOUS WATER HEATER. PROVIDE CIRCUITING AND DISCONNECT SWITCH AS SHOWN.
3. DOOR CONTROL PANEL. PROVIDE RELAY MODULE AND ALL OTHER MATERIALS REQUIRED TO CONNECT DOOR HARDWARE TO FIRE ALARM SYSTEM TO INITIATE DOOR RELEASE FOR EGRESS UPON ACTIVATION OF FIRE ALARM. CARD READERS SHALL BE HONEYWELL PRO WATCH 3 (RELEASE 7).
4. RECEPTACLE FOR LIFT CHARGING STATION. MOUNT AT 46". FIELD COORDINATE EXACT MOUNTING HEIGHT WITH LIFT MANUFACTURER.
8. INSTALL SURGE PROTECTORS AS CLOSE AS POSSIBLE TO ASSOCIATED PANELBOARD. COORDINATE WITH MECHANICAL CONTRACTOR FOR LOCATION OF PANELBOARDS PRIOR TO INSTALLATION OF PIPING AND DUCTS. NO DUCTS OR PIPING ABOVE OR BELOW ELECTRICAL EQUIPMENTS.
9. CONTRACTOR SHALL FIELD COORDINATE WITH HYPERBARIC EQUIPMENT PROVIDER FOR EXACT LOCATION OF CONDUIT/CIRCUIT FLOOR PENETRATIONS AND REQUIREMENTS.
10. 30HP COMPRESSOR WITH INTEGRAL VFD AND DRYER. NOT INTENDED TO RUN AT SAME TIME AS SECOND COMPRESSOR. FIELD COORDINATE ALL ELECTRICAL REQUIREMENTS AND EQUIPMENT LOCATIONS WITH MECHANICAL CONTRACTOR. ADJUST CIRCUIT BREAKER AND CABLES SIZES AS REQUIRED PER NEC FOR PROVIDED EQUIPMENT.
11. FIELD COORDINATE ALL ELECTRICAL REQUIREMENTS AND EQUIPMENT LOCATIONS WITH MECHANICAL CONTRACTOR. PROVIDE ALL MATERIALS REQUIRED FOR A COMPLETE AND OPERATIONAL SYSTEM. ADJUST CIRCUIT BREAKER AND CABLES SIZES AS REQUIRED PER NEC FOR PROVIDED EQUIPMENT.

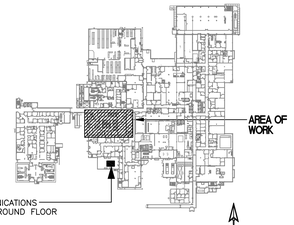

KEY PLAN

NOT TO SCALE

04-18-12 MEDICAL EQUIPMENT AND INTERIOR DESIGN REVISIONS

REVISION	DATE
65% SUBMITTAL	02/19/11
95% SUBMITTAL	03/29/11
100% SUBMITTAL	04/13/11
CONSTRUCTION SET	05/02/11
MEDICAL EQUIPMENT AND INTERIOR DESIGN REVISIONS	04/18/12

CONSULTANTS:

HADDAD ENGINEERING, INC.
2955 HARTLEY ROAD, SUITE 205 JACKSONVILLE, FL. 32257
TELEPHONE - (904) 262-5066 FAX - (904) 262-7139
CERTIFICATE OF AUTHORIZATION NO. 4000

NAMIR A. HADDAD P.E.
LICENSE NO. 31987

ARCHITECT/ENGINEERS:

ttv architects, inc.
110 EAST FORSYTH ST
JACKSONVILLE, FLORIDA 32202
T 904.798.8333
F 904.798.8335
www.ttvarch.com
FL Lic#AA0002609

Drawing Title: GROUND FLOOR ELECTRICAL PLAN - POWER

Approved: Project Director

Project Title: SPECIALTY TREATMENT EXPANSION PROJECT- BUILDING #1

Location: JAMES A. HALEY VETERANS' HOSPITAL

Date: 02/19/11 | Checked: NH | Drawn: WH

Project Number: 673-CSI-100

Building Number: 1

Drawing Number: EP100

Dwg. 005 of 020

Office of Construction and Facilities Management

Department of Veterans Affairs

VA FORM 08-6231

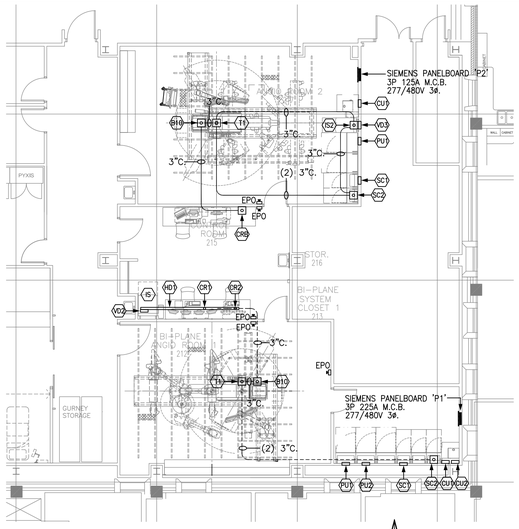

ANGIO EQUIPMENT CONDUITS

SCALE: 1/8" = 1'-0"

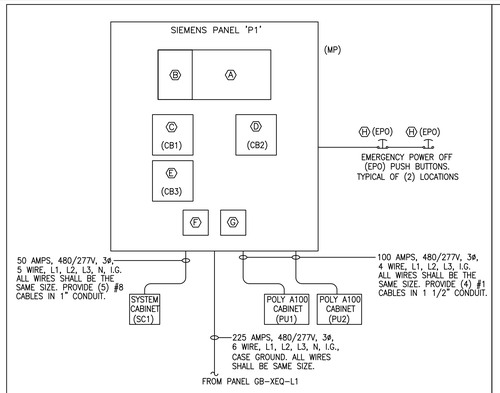

PANEL 'P1' NOTES:

- Ⓐ PANELBOARD SIEMENS MODEL #P2E18FD225FTS – 3P, 225A MAIN BREAKER.
- Ⓑ 120VAC UNDERVOLTAGE TRIP – SIEMENS MODEL #U01FD60.
- Ⓒ 100A 3 POLE BREAKER FOR POLYDOROS A100 (PU1) – SIEMENS MODEL #ED43B100.
- Ⓓ 100A 3 POLE BREAKER FOR POLYDOROS A100 (PU2) – SIEMENS MODEL #ED43B100.
- Ⓔ 50A 3 POLE BREAKER FOR SYSTEM CABINET (SC1) – SIEMENS MODEL #ED43B050.
- Ⓕ 277V TO 120V STEP DOWN TRANSFORMER FOR UNDERVOLTAGE TRIP – #KT7050P.
- Ⓖ ISOLATED AND NON-ISOLATED GROUND BAR.
- Ⓗ EPO ACTUATOR – #3SB3000-1HA20. N.C. CONTACT – #3SB3400-DC.

NOT TO SCALE

SIEMENS POWER PANEL 'P1' DIAGRAM

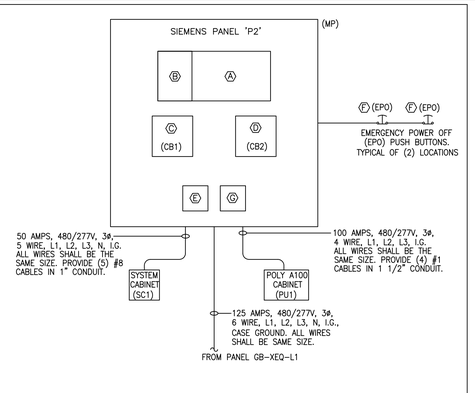

PANEL 'P2' NOTES:

- Ⓐ PANELBOARD SIEMENS MODEL #P2E18E4125FTS – 3P, 125A MAIN BREAKER.
- Ⓑ 120VAC UNDERVOLTAGE TRIP – SIEMENS MODEL #U01ED60.
- Ⓒ 100A 3 POLE BREAKER FOR POLYDOROS A100 (PU1) – SIEMENS MODEL #ED43B100.
- Ⓓ 50A 3 POLE BREAKER FOR SYSTEM CABINET (SC1) – SIEMENS MODEL #ED43B050.
- Ⓔ 277V TO 120V STEP DOWN TRANSFORMER FOR UNDERVOLTAGE TRIP – #KT7050P.
- Ⓕ EPO ACTUATOR – #3SB3000-1HA20. N.C. CONTACT – #3SB3400-DC.
- Ⓖ ISOLATED AND NON-ISOLATED GROUND BAR.

NOT TO SCALE

SIEMENS POWER PANEL 'P2' DIAGRAM

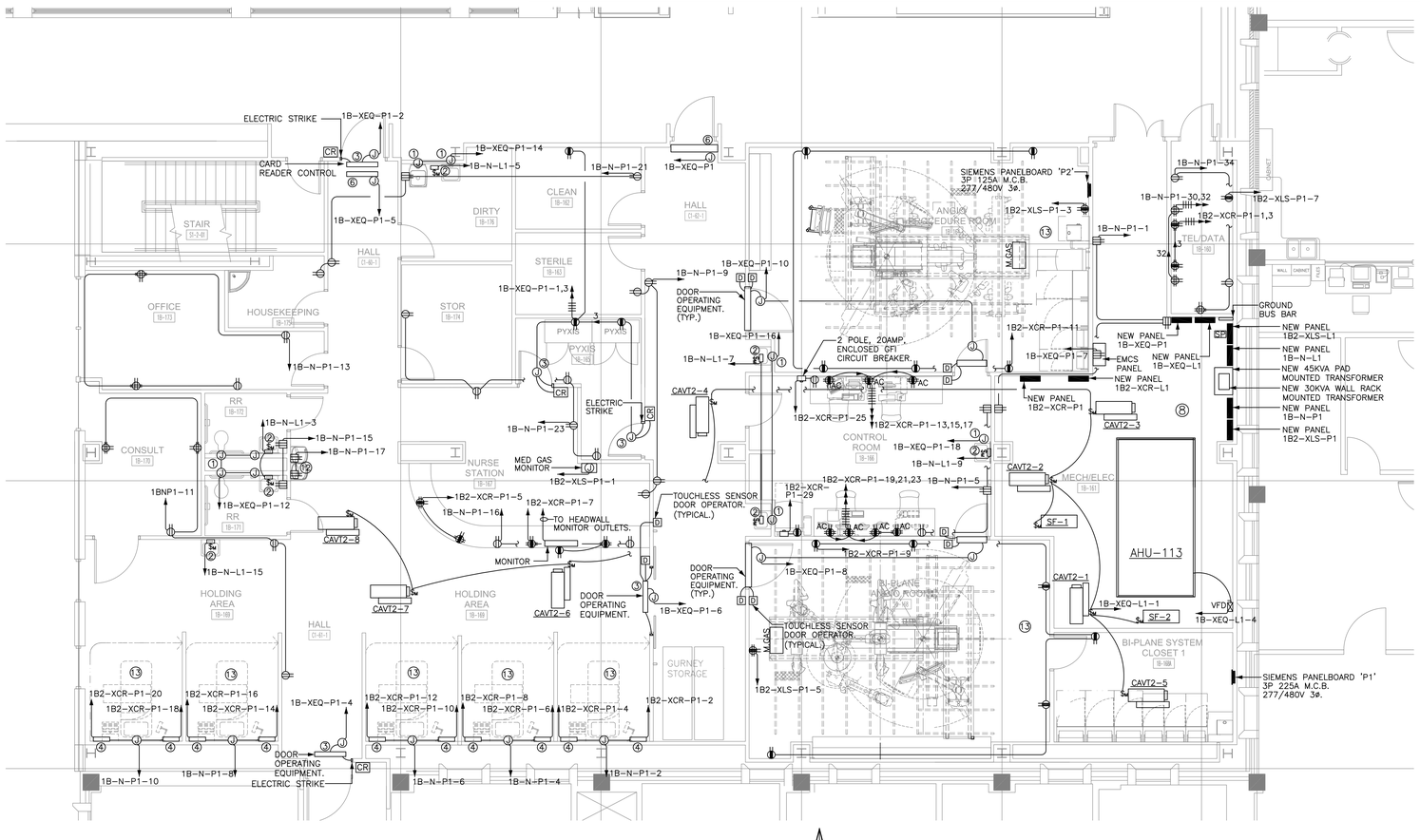

FIRST FLOOR ELECTRICAL PLAN - POWER

SCALE: 3/16" = 1'-0"

NOTES:

1. PROVIDE EMERGENCY CIRCUITING, CONDUIT, AND J-BOXES AS SHOWN TO SINK AND TOILET CONTROLS. PROVIDE WIRES, CONDUIT, AND J-BOXES AS REQUIRED TO PROVIDE A COMPLETE OPERATIONAL SYSTEM.
2. INSTANTANEOUS WATER HEATER. PROVIDE CIRCUITING AND DISCONNECT SWITCH AS SHOWN.
3. PROVIDE RELAY MODULE AND ALL OTHER MATERIALS REQUIRED TO CONNECT DOOR HARDWARE TO FIRE ALARM SYSTEM TO INITIATE DOOR RELEASE FOR EGRESS UPON ACTIVATION OF FIRE ALARM. CARD READERS SHALL BE HONEYWELL PRO WATCH 3 (RELEASE 7).
4. SEE AXIOM PATIENT CARE HEADWALL DIAGRAM ON SHEET ES105 FOR DEVICE TYPES AND MOUNTING HEIGHTS.
6. EMERGENCY EXIT DOOR ONLY. ALARM SHALL SOUND UPON DOORS OPENING. PROVIDE CEILING MOUNTED POWER SUPPLIES FOR ELECTRIC DOOR STRIKES. PROVIDE (1) 24VDC POWER SUPPLY WITH BATTERY BACKUP PER DOOR AS SHOWN ON FLOOR PLAN. UPON ACTIVATION OF FIRE ALARM, DOUBLE DOORS SHALL POSITIVELY LATCH TO PREVENT RE-ENTREE AND DELAYED EGRESS SHALL BE INITIATED PER NFPA-72.
7. CONTRACTOR SHALL REVIEW SIEMENS DRAWINGS FOR BI-PLANE AND ANGIO ROOMS. PROVIDE ALL REQUIRED CONDUITS AND POWER AS REQUIRED. COORDINATE WITH SIEMENS EQUIPMENT INSTALLER PRIOR TO INSTALLATION OF CONDUITS.
8. INSTALL SURGE PROTECTORS AS CLOSE AS POSSIBLE TO ASSOCIATED PANELBOARD. COORDINATE WITH MECHANICAL CONTRACTOR FOR LOCATION OF PANELBOARDS PRIOR TO INSTALLATION OF PIPING AND DUCTS. NO DUCTS OR PIPING ABOVE OR BELOW ELECTRICAL EQUIPMENTS.
12. LOCATE OUTLET BELOW WATER COOLER. COORDINATE WITH COOLER INSTALLER FOR EXACT MOUNTING HEIGHT.
13. PROVIDE GROUND INTEGRITY TEST. TEST ALL OUTLETS AND METAL PARTS IN PATIENT CARE AREAS.

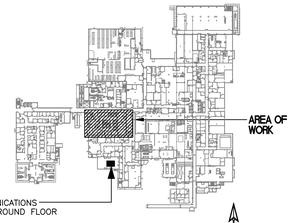

KEY PLAN

NOT TO SCALE

04-18-12 MEDICAL EQUIPMENT AND INTERIOR DESIGN REVISIONS

REVISION	DATE
65% SUBMITTAL	02/19/11
95% SUBMITTAL	03/29/11
100% SUBMITTAL	04/13/11
CONSTRUCTION SET	05/02/11
MEDICAL EQUIPMENT AND INTERIOR DESIGN REVISIONS	04/18/12

CONSULTANTS:

HADDAD ENGINEERING, INC.
2955 HARTLEY ROAD, SUITE 205 JACKSONVILLE, FL. 32257
TELEPHONE - (904) 262-5066 FAX - (904) 262-7139
CERTIFICATE OF AUTHORIZATION NO. 4000

NAMIR A. HADDAD P.E.
LICENSE NO. 31967

ARCHITECT/ENGINEERS:

ttv architects, inc.
110 EAST FORSYTH ST
JACKSONVILLE, FLORIDA 32202
T 904.798.8303
F 904.798.8305
www.ttvarch.com
FL Lic.#AA0002609

Drawing Title: FIRST FLOOR ELECTRICAL PLAN - POWER

Approved: Project Director

Project Title: SPECIALTY TREATMENT EXPANSION PROJECT- BUILDING #1

Location: JAMES A. HALEY VETERANS' HOSPITAL

Date: 02/19/11 | Checked: NH | Drawn: WH

Project Number: 008 673-CSI-100

Building Number: 1

Drawing Number: EP101

Dwg. 006 of 020

Office of Construction and Facilities Management

Department of Veterans Affairs

VA FORM 08-6231

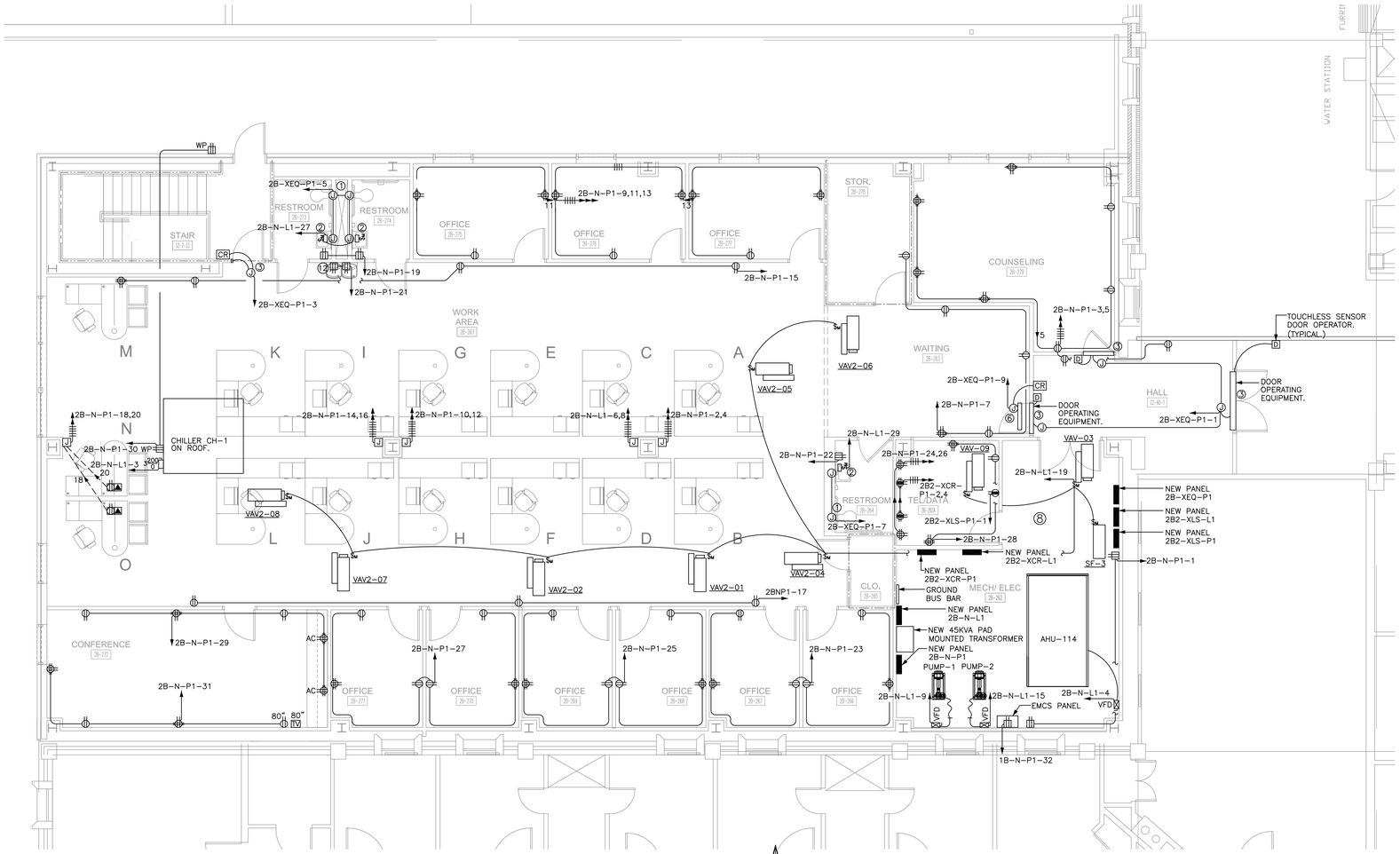

SECOND FLOOR ELECTRICAL PLAN - POWER

SCALE: 3/16" = 1'-0"

NOTES:

1. PROVIDE EMERGENCY CIRCUITING, CONDUIT, AND J-BOXES AS SHOWN TO SINK AND TOILET CONTROLS. PROVIDE WIRES, CONDUIT, AND J-BOXES AS REQUIRED TO PROVIDE A COMPLETE OPERATIONAL SYSTEM.
2. INSTANTANEOUS WATER HEATER. PROVIDE CIRCUITING AND DISCONNECT SWITCH AS SHOWN.
3. PROVIDE RELAY MODULE AND ALL OTHER MATERIALS REQUIRED TO CONNECT DOOR HARDWARE TO FIRE ALARM SYSTEM TO INITIATE DOOR RELEASE FOR EGRESS UPON ACTIVATION OF FIRE ALARM. CARD READERS SHALL BE HONEYWELL PRO WATCH 3 (RELEASE 7).
4. NOT USED.
5. CODE BLUE STATION, NURSE CALL, DOMELIGHTS. PROVIDE 3/4" CONDUIT TO CEILING SPACE. PROVIDE CAT 6 CABLE FROM OUTLET BOX TO TELEPHONE CLOSET TO BE ASSIGNED BY THE VA TECHNOLOGY DEPARTMENT. CODE BLUE STATION TO BE SUPPLIED BY OWNER AND INSTALLED BY CONTRACTOR. COORDINATE WITH OWNER AND EQUIPMENT SUPPLIER. SUPPORT CABLES AT INTERVALS NOT TO EXCEED 24". (TYPICAL).
6. EMERGENCY EXIT DOOR ONLY. ALARM SHALL SOUND UPON DOORS OPENING. PROVIDE CEILING MOUNTED POWER SUPPLIES FOR ELECTRIC DOOR STRIKES. PROVIDE (1) 24VDC POWER SUPPLY WITH BATTERY BACKUP PER DOOR AS SHOWN ON FLOOR PLAN. UPON ACTIVATION OF FIRE ALARM, DOUBLE DOORS SHALL POSITIVELY LATCH TO PREVENT RE-ENTREE AND DELAYED EGRESS SHALL BE INITIATED PER NFPA-72.
8. INSTALL SURGE PROTECTORS AS CLOSE AS POSSIBLE TO ASSOCIATED PANELBOARD. COORDINATE WITH MECHANICAL CONTRACTOR FOR LOCATION OF PANELBOARDS PRIOR TO INSTALLATION OF PIPING AND DUCTS. NO DUCTS OR PIPING ABOVE OR BELOW ELECTRICAL EQUIPMENTS.
12. LOCATE OUTLET BELOW WATER COOLER. COORDINATE WITH COOLER INSTALLER FOR EXACT MOUNTING HEIGHT.

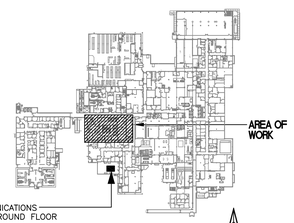

LOCATION OF COMMUNICATIONS ROOM GB-026 ON GROUND FLOOR

KEY PLAN

NOT TO SCALE

04-18-12 MEDICAL EQUIPMENT AND INTERIOR DESIGN REVISIONS

REVISION	DATE
65% SUBMITTAL	02/19/11
95% SUBMITTAL	03/29/11
100% SUBMITTAL	04/13/11
CONSTRUCTION SET	05/02/11
MEDICAL EQUIPMENT AND INTERIOR DESIGN REVISIONS	04/18/12

CONSULTANTS:

HADDAD ENGINEERING, INC.
2955 HARTLEY ROAD, SUITE 205 JACKSONVILLE, FL. 32257
TELEPHONE - (904) 262-5066 FAX - (904) 262-7139
CERTIFICATE OF AUTHORIZATION NO. 4000

NAMIR A. HADDAD P.E.
LICENSE NO. 31967

ARCHITECT/ENGINEERS:

ttv architects, inc.
110 EAST FORSYTH ST
JACKSONVILLE, FLORIDA 32202
T 904.798.8333
F 904.798.8335
www.ttvarch.com
FL Lic#AA0002609

Drawing Title: SECOND FLOOR ELECTRICAL PLAN - POWER

Approved: Project Director

Project Title: SPECIALTY TREATMENT EXPANSION PROJECT- BUILDING #1

Location: JAMES A. HALEY VETERANS' HOSPITAL

Date: 02/19/11 | Checked: NH | Drawn: WH

Project Number: 673-CSI-100

Building Number: 1

Drawing Number: EP102

Dwg. 007 of 020

Office of Construction and Facilities Management

Department of Veterans Affairs

VA FORM 08-6231

LIGHTNING PROTECTION SYSTEM SHALL INCLUDE COVERAGE OF ALL CANOPIES. REFER TO ARCHITECTURAL PLANS FOR CANOPY LOCATIONS. VERIFY ALL LOCATIONS PRIOR TO BID.

LIGHTNING PROTECTION MATERIALS LIST

	COPPER LIGHTNING PROTECTION MAIN CONDUCTOR	#CCHB–29–17
	ALUMINUM LIGHTNING PROTECTION CONDUCTOR (AT ALUM. MECH. EQUIP. ONLY)	#ACHB–24–14
	COPPER LIGHTNING PROTECTION SECONDARY CABLE*	CCHB–#6
	BIMETAL CONNECTOR	MNHB–93
	COPPER CABLE FASTENERS (FASTEN CABLE EVERY 3FT. MAX.) ALUM. CABLE FASTENERS (FASTEN CABLE EVERY 3FT. MAX.)	CFHB–72, 66, 64, AFHB–72, 64
*A	3/8" x 12" COPPER AIR TERMINAL AND ADHESIVE BASE	CAHB–308, CBHB–23D
*B	3/8" x 12" COPPER AIR TERMINAL AND CONCEALED BASE	CAHB–308, CBHB–8SS
	1/2" x 12" ALUMINUM AIR TERMINAL AND SADDLE BASE ADHERED TO EQUIPMENT (AT ALUM. ROOF TOP EQUIPMENT/FANS)	AAHB–302, ABHB–23D
	SECONDARY BONDING:	
	*FLASHING CONNECTOR	CNHB–44D
	*METAL VENT PIPE CONNECTOR	CNHB–42XD
	*METAL ROOF DRAIN / GUTTER CONNECTOR	CNHB–160D
	BONDING PLATE (AT ALUM. RTU & FANS)	APHB–54D
	BONDING PLATE (TO BASE OF STEEL AT EACH DOWNLEAD)	PPHB–54D
	PIPE CLAMP (ANTENNAS, RAILINGS, ETC.)	PMHB–103XD
	BONDING "C" CLAMP (LADDERS)	PPHB–59D
	CABLE CONNECTOR	CNHB–44D, ANHB–44
	STRAIGHT SPLICER	CRHB–26
	CROSSOVER CABLE CONNECTOR	CMHB–57XXX
	WATERLINE CONNECTOR (FIRE WATER & DOMESTIC WATER)	CMHB–97D
	5/8" x 10'–0" COPPERBOND GROUND RODS AND CONNECTOR	CGHB–106GR, 57D

LIGHTNING PROTECTION NOTES

1. ALL MATERIALS SHOWN ARE MANUFACTURED BY HEARY BROS. LIGHTNING PROTECTION CO., INC.
2. THE LIGHTNING PROTECTION SYSTEM AS SHOWN ON DRAWING HAS BEEN DESIGNED IN ACCORDANCE WITH UL96 & NFPA–780 LIGHTNING PROTECTION SYSTEM STANDARDS.
3. CONDUCTORS SHALL MAINTAIN A HORIZONTAL OR DOWNWARD COURSE, FREE FROM "U" OR "V" (DOWN AND UP) POCKETS.
4. NO BEND OF CONDUCTOR SHALL FORM AN ANGLE OF LESS THAN 90° NOR SHALL HAVE A RADIUS OF BEND LESS THAN 8".
5. AIR TERMINALS SHALL BE SPACED EVERY 20'–0" MAXIMUM AROUND THE ROOF PERIMETER AND/OR ALONG ROOF RIDGES. AIR TERMINALS SHALL BE LOCATED WITHIN 2'–0" OF OUTSIDE CORNERS.
6. AIR TERMINALS SHALL BE SPACED EVERY 50'–0" MAXIMUM IN CENTER ROOF AREAS.
7. ACTUAL JOBSITE CONDITIONS MAY REQUIRE SLIGHT ALTERATIONS IN AIR TERMINAL, DOWN CONDUCTOR AND GROUND ROD LOCATIONS.
8. BARE COPPER MATERIALS SHALL NOT BE INSTALLED ON ALUMINUM OR GALVALUM SURFACES, AND ALUMINUM MATERIALS SHALL NOT BE INSTALLED ON COPPER SURFACES.
9. ALL LIGHTNING PROTECTION CONDUCTORS SHALL BE FASTENED EVERY 3'–0" MAX.
10. METALLIC BODIES OF INDUCTANCE SITUATED WITHIN 6'–0" OF A LIGHTNING CONDUCTOR OR ANOTHER BONDED METAL BODY SHALL BE INTERCONNECTED TO THE LIGHTNING CONDUCTOR SYSTEM, UNLESS INHERENTLY GROUNDED.
11. BOND TO ALL METAL BODIES OF CONDUCTANCE WITHIN 6'–0" OF THE MAIN LIGHTNING CONDUCTOR SUCH AS EXHAUST FANS, ROOF VENTS, METAL COOLING TOWERS, H.V.A.C. UNITS, LADDERS, RAILINGS, ANTENNAS, SKYLIGHTS, METAL STACKS AND ANY OTHERS LARGE METAL BODY WHOSE HEIGHT EXCEEDS THAT OF THE AIR TERMINAL IN USE, UNLESS PROTECTED BY HIGHER ROOF ELEVATIONS.
12. CONNECTIONS TO GROUND RODS SHALL BE MADE AT A POINT NOT LESS THAN 1'–0" BELOW FINISHED GRADE AND 2'–0" AWAY FROM FOUNDATION WALL.
13. BOND TO WATERLINES (DOMESTIC & FIRE).
14. A LIGHTNING ARRESTOR, PROTECTOR OR ANTENNA DISCHARGE UNIT SHALL BE INSTALLED ON EACH ELECTRIC AND TELEPHONE SERVICE AND RADIO AND TELEVISION ANTENNA LEAD–IN BY THE ELECTRICAL CONTRACTOR, IN ACCORDANCE WITH NFPA–70.
15. TRANSIENT VOLTAGE SURGE SUPPRESSION (TVSS) OF SERVICES SHALL BE PROVIDED BY THE ELECTRICAL CONTRACTOR. (I.E. COMPUTERS, COPIERS, TELEPHONE, ETC.).
16. THE INSTALLATION SHALL MEET THE REQUIREMENTS OF NFPA–780 STANDARD FOR ARL CERTIFICATION.

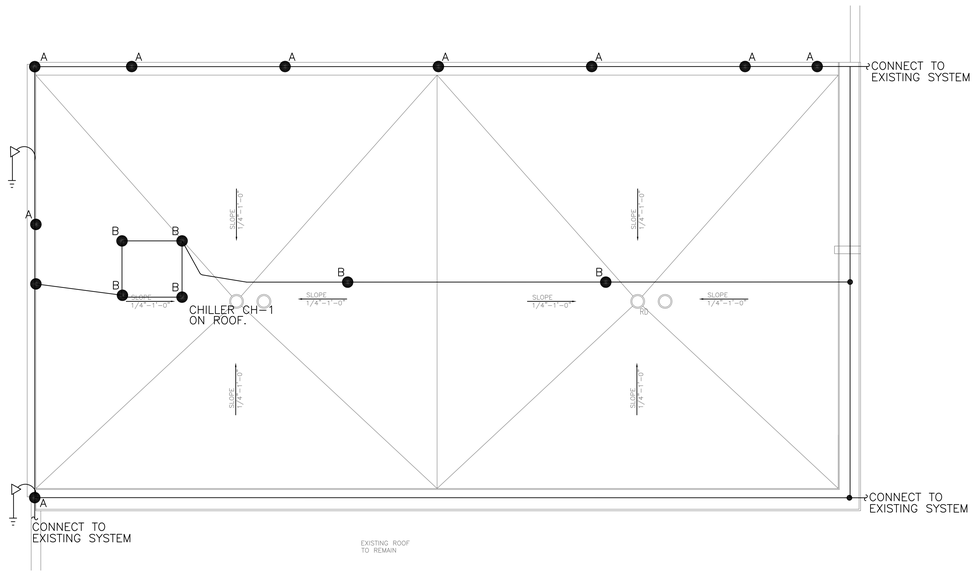

LIGHTNING PROTECTION PLAN

SCALE: 1/8" = 1'–0"

NOTES:

1. DRAWINGS SHOWS PROPOSED LOCATION OF AIR TERMINALS. CONTRACTOR SHALL VISIT SITE, STUDY ARCHITECTURAL DRAWINGS OF NEW BUILDING, STUDY SITE CONDITIONS AND EXISTING BUILDING LIGHTNING PROTECTION. PROVIDE SYSTEM AS AN EXTENSION OF EXISTING LIGHTNING PROTECTION. SYSTEM SHALL BE UL LISTED. DO NOT INSTALL DOWN CONDUCTOR IN STAIRWELL. PROVIDE ADDITIONAL AIR TERMINALS AND CONDUCTORS AS REQUIRED TO MEET "NFPA" AND "UL".

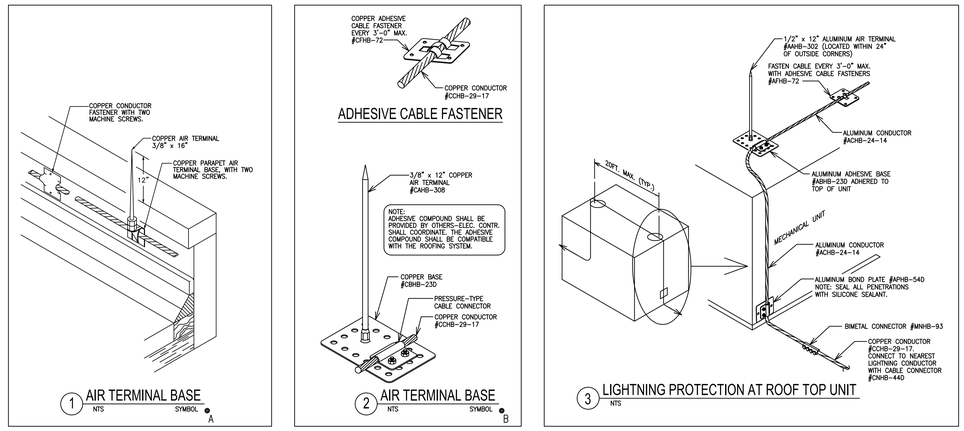

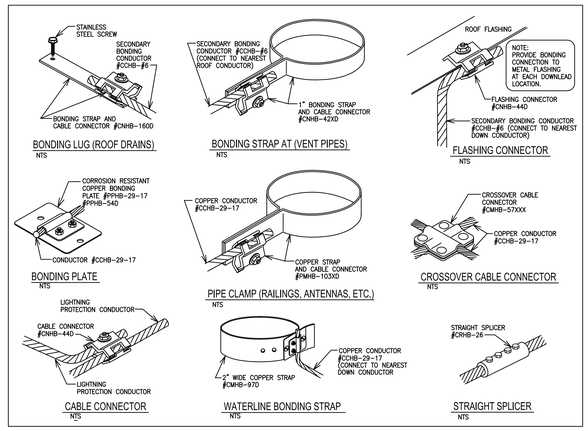

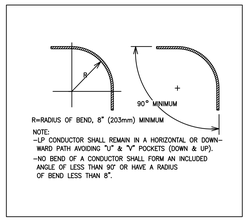

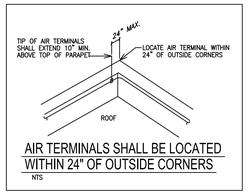

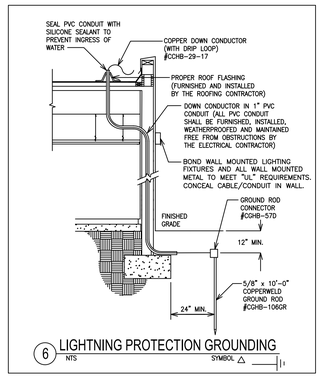

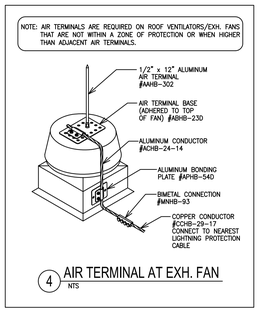

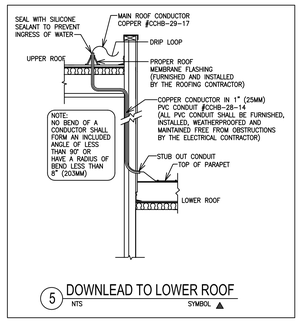

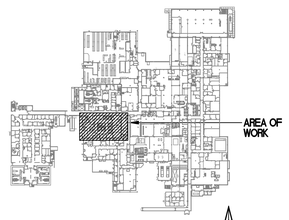

KEY PLAN
NOT TO SCALE

04-18-12 MEDICAL EQUIPMENT AND INTERIOR DESIGN REVISIONS

REVISION	DATE
65% SUBMITTAL	02/19/11
95% SUBMITTAL	03/29/11
100% SUBMITTAL	04/13/11
CONSTRUCTION SET	05/02/11
MEDICAL EQUIPMENT AND INTERIOR DESIGN REVISIONS	04/18/12

CONSULTANTS:

HADDAD ENGINEERING, INC.
2955 HARTLEY ROAD, SUITE 205 JACKSONVILLE, FL. 32257
TELEPHONE - (904) 262-5066 FAX - (904) 262-7139
CERTIFICATE OF AUTHORIZATION NO. 4000

NAMIR A. HADDAD P.E.
LICENSE NO. 31967

ARCHITECT/ENGINEERS:

ttv architects, inc.
110 EAST FORSYTH ST
JACKSONVILLE, FLORIDA 32202
T 904.798.8303
F 904.798.8320
www.ttvarch.com
FL LB #AA0002609

Drawing Title: LIGHTNING PROTECTION PLAN

Approved: Project Director

Project Title: SPECIALTY TREATMENT EXPANSION PROJECT- BUILDING #1

Location: JAMES A. HALEY VETERANS' HOSPITAL

Date: 02/19/11 | Checked: NH | Drawn: WH

Project Number: 673-CSI-100

Building Number: 1

Drawing Number: EP103

Dwg. 008 of 020

Office of Construction and Facilities Management

Department of Veterans Affairs

VA FORM 08–6231

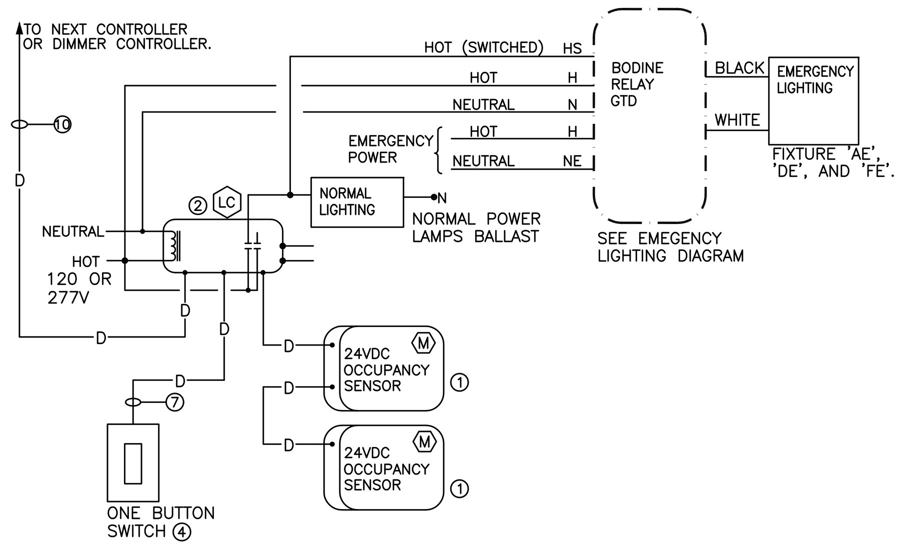

NOT TO SCALE

LIFE SAFETY - SWITCH

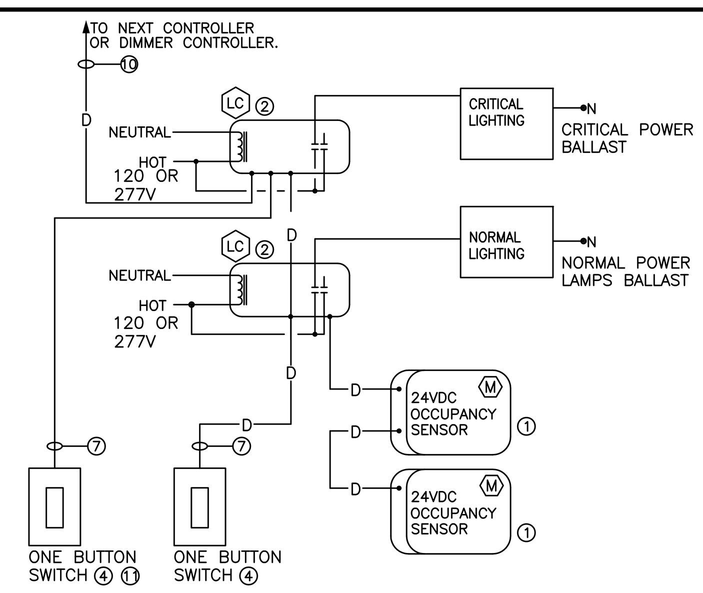

TWO SWITCHES

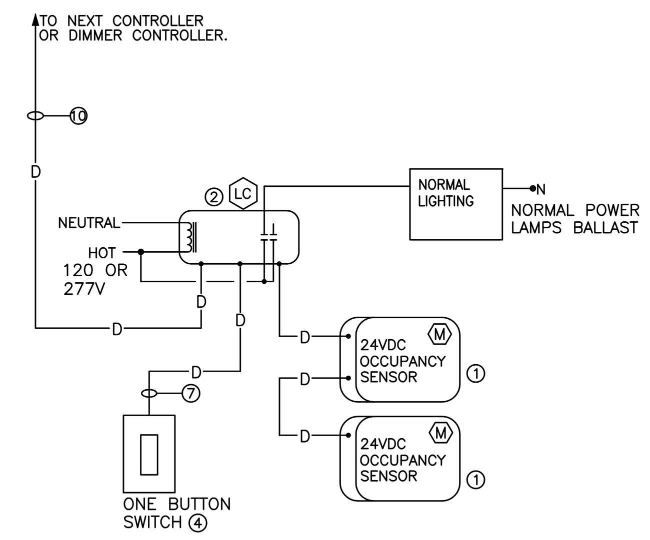

ONE SWITCH

NOTES:

① OCCUPANCY SENSOR, DIGITAL PJR, LIGHT CONTROL CEILING MOUNTED WATTSTOPPER LMDC-100-U. FOR LONG RANGE SENSOR PROVIDE WATTSTOPPER #LMPX-100-1-U. QUANTITY/LOCATION OF SENSORS AS SHOWN ON FLOOR PLANS.

② ROOM CONTROLLER – PROVIDE 120/277V RELAYS, WATTSTOPPER #LMRC-311-U, #LMRC-312-U, OR #LMRC-313-U AS REQUIRED BACNET. (1, 2, OR 3 RELAY ROOM CONTROLLERS RESPECTIVELY.)

③ NOT USED.

④ ONE BUTTON SWITCH WITH COVER PLATE – IVORY. WATTSTOPPER, ONE BUTTON #LMSW-101-I, WITH IVORY COVER PLATE OVERRIDE 'OFF' SWITCH.

⑤ DIGITAL WIRELESS CONFIGURATION TOOL, WATTSTOPPER #LMCT-100. TOOL TO BE DELIVERED TO FACILITY ENGINEERING DEPARTMENT AFTER PROGRAMMING AND TRAINING. TOTAL OF (2) PROGRAMMERS REQUIRED FOR THIS PROJECT.

⑥ PROGRAM SYSTEM TO TURN ON LIGHTING MANUALLY AND AUTOMATIC OFF AFTER 10 MINUTES. PROVIDE REQUIRED CONTROLLERS AND RELAYS TO ACCOMPLISH THIS FUNCTION.

⑦ PROVIDE 3/4" CONDUIT FROM DEVICE OUTLET UP TO CEILING SPACE. SUPPORT DATA CABLES FROM BUILDING STRUCTURE, IN CEILING SPACE AT INTERVALS NOT TO EXCEED 24". TYPICAL.
——— #12WIRES IN 3/4" CONDUIT.

—D— WATTSTOPPER #LMRJ-P-U, LENGTHS AS REQUIRED. GREEN JACKET. CAT 5E PLENUM RATED DATA CABLE CONCEALED IN CEILING SPACE. SUPPORT AT INTERVALS NOT TO EXCEED 24".

⑧ EQUAL PRODUCTS MANUFACTURED BY LUTRON OR SENSOR SWITCH WILL BE ACCEPTABLE. ALL PRODUCT SHALL MEET ARRA REQUIREMENTS.

⑨ SHOP DRAWINGS: PROVIDE WIRING DIAGRAMS PREPARED BY OCCUPANCY SENSOR MANUFACTURE. SHOW CONNECTION OF ALL DEVICES AND EQUIPMENT. PROVIDE PROGRAMMING AND TRAINING (THREE (2) HOUR SESSIONS).

⑩ PLENUM CONTROL CABLE. SUPPORT FROM BUILDING STRUCTURE AT INTERVALS NOT TO EXCEED 24".

⑪ PROVIDE RED LABEL AT CRITICAL POWER SWITCH "CRITICAL POWER".

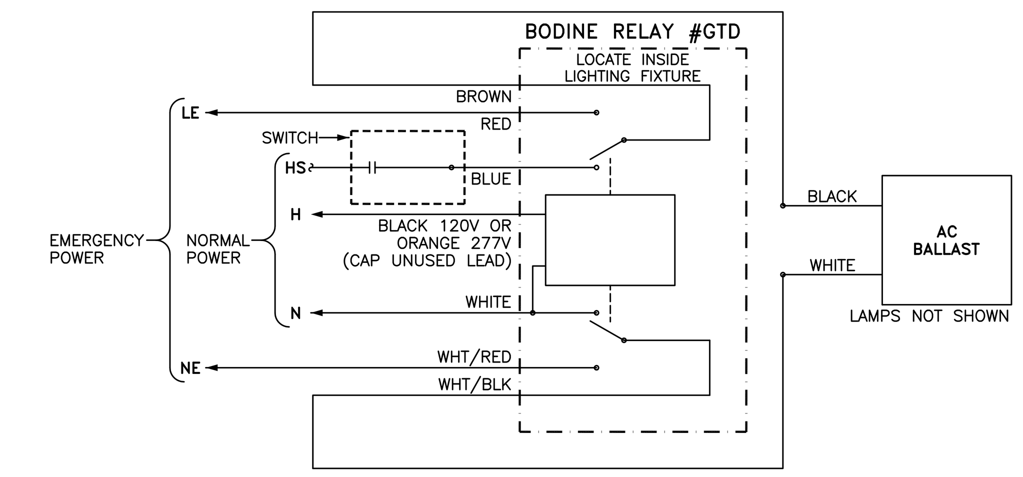

NORMAL OPERATION (SHOWN ABOVE)
AC LIGHTING BALLAST SUPPLIED BY NORMAL POWER AND CONTROLLED BY WALL SWITCH

EMERGENCY OPERATION
AC LIGHTING BALLAST SUPPLIED BY EMERGENCY POWER AND INDEPENDENT OF WALL SWITCH POSITION

EMERGENCY LIGHTING DIAGRAM

TYPICAL OCCUPANCY SENSORS CIRCUIT DIAGRAM (ON/OFF)

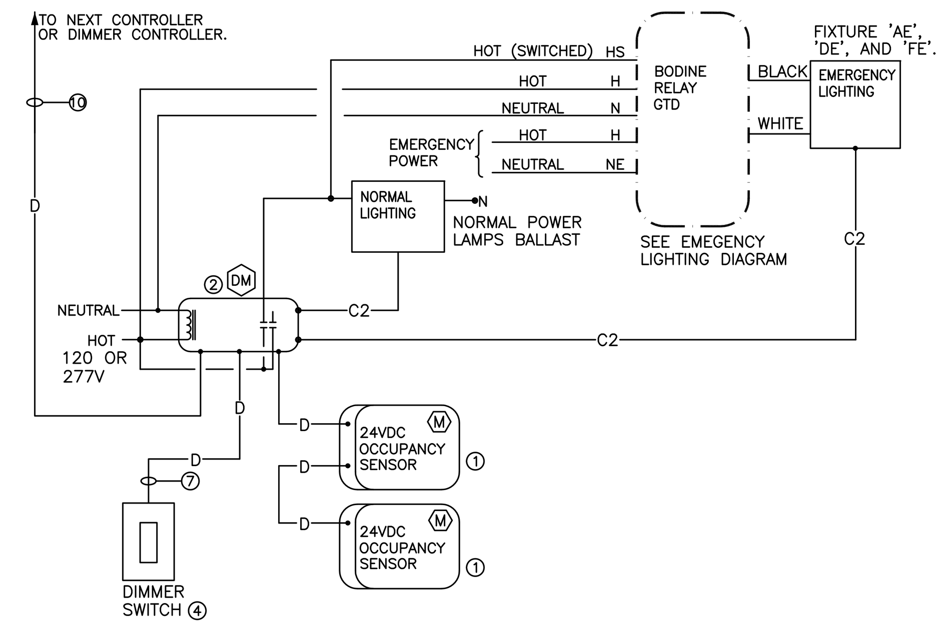

NOT TO SCALE

LIFE SAFETY - DIMMER

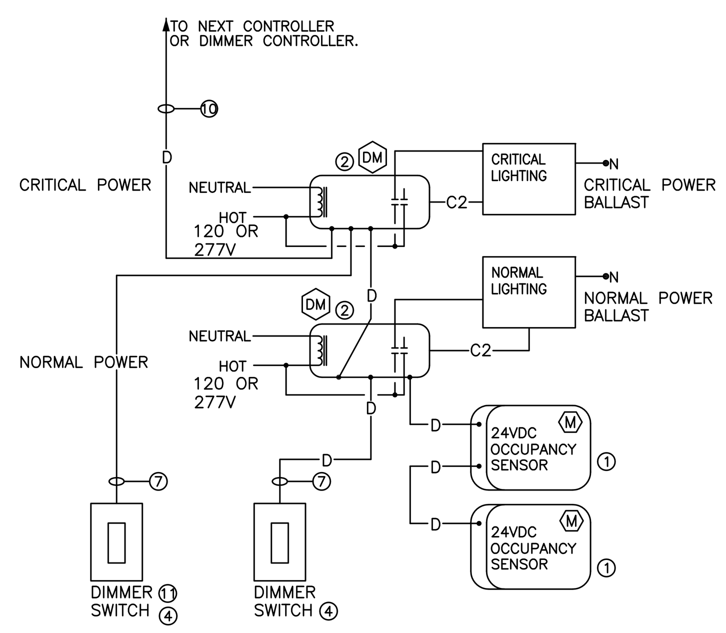

TWO DIMMERS

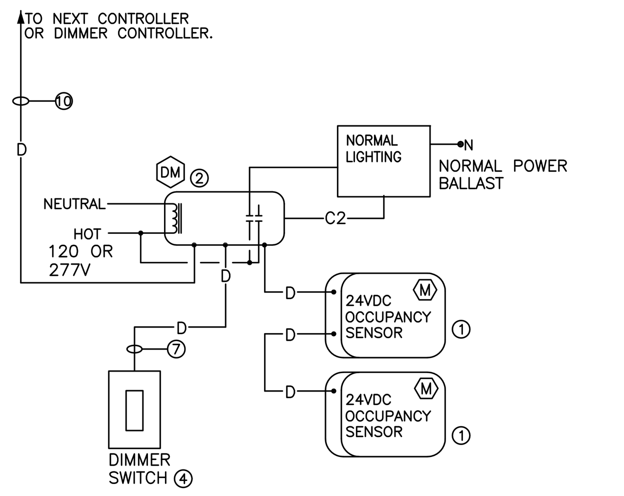

ONE DIMMER

NOTES:

① OCCUPANCY SENSOR, DIGITAL PJR, LIGHT CONTROL CEILING MOUNTED WATTSTOPPER LMDC-100-U. FOR LONG RANGE SENSOR PROVIDE WATTSTOPPER #LMPX-100-1-U. QUANTITY/LOCATION OF SENSORS AS SHOWN ON FLOOR PLANS.

② DIMMING ROOM CONTROLLER – PROVIDE 120/277V RELAYS, WATTSTOPPER #LMRC-311-U, #LMRC-312-U, OR #LMRC-313-U AS REQUIRED BACNET. (1, 2, OR 3 RELAY ROOM CONTROLLERS RESPECTIVELY.)

③ NOT USED.

④ DIMMER SWITCH WITH COVER PLATE – IVORY. WATTSTOPPER #LMDM-101-I WITH IVORY COVER PLATE OVERRIDE 'OFF' SWITCH.

⑤ DIGITAL WIRELESS CONFIGURATION TOOL, WATTSTOPPER #LMCT-100. TOOL TO BE DELIVERED TO FACILITY ENGINEERING DEPARTMENT AFTER PROGRAMMING AND TRAINING. TOTAL OF (2) PROGRAMMERS REQUIRED FOR THIS PROJECT.

⑥ PROGRAM SYSTEM TO TURN ON LIGHTING MANUALLY AND AUTOMATIC OFF AFTER 10 MINUTES. PROVIDE REQUIRED CONTROLLERS AND RELAYS TO ACCOMPLISH THIS FUNCTION.

⑦ PROVIDE 3/4" CONDUIT FROM DEVICE OUTLET UP TO CEILING SPACE. SUPPORT DATA CABLES FROM BUILDING STRUCTURE, IN CEILING SPACE AT INTERVALS NOT TO EXCEED 24". TYPICAL.
——— #12WIRES IN 3/4" CONDUIT.

—D— WATTSTOPPER #LMRJ-P-U, LENGTHS AS REQUIRED. GREEN JACKET. CAT 5E PLENUM RATED DATA CABLE CONCEALED IN CEILING SPACE. SUPPORT AT INTERVALS NOT TO EXCEED 24".

—CL— CLASS 2: 0-10 VOLT CONTROL WIRING IN 3/4" CONDUIT.

⑧ EQUAL PRODUCTS MANUFACTURED BY LUTRON OR SENSOR SWITCH WILL BE ACCEPTABLE. ALL PRODUCT SHALL MEET ARRA REQUIREMENTS.

⑨ SHOP DRAWINGS: PROVIDE WIRING DIAGRAMS PREPARED BY OCCUPANCY SENSOR MANUFACTURE. SHOW CONNECTION OF ALL DEVICES AND EQUIPMENT. PROVIDE PROGRAMMING AND TRAINING (THREE (2) HOUR SESSIONS).

⑩ PLENUM CONTROL CABLE. SUPPORT FROM BUILDING STRUCTURE AT INTERVALS NOT TO EXCEED 24".

⑪ PROVIDE RED LABEL AT CRITICAL POWER DIMMER "CRITICAL POWER".

TYPICAL OCCUPANCY SENSORS CIRCUIT DIAGRAM (DIMMING SWITCH)

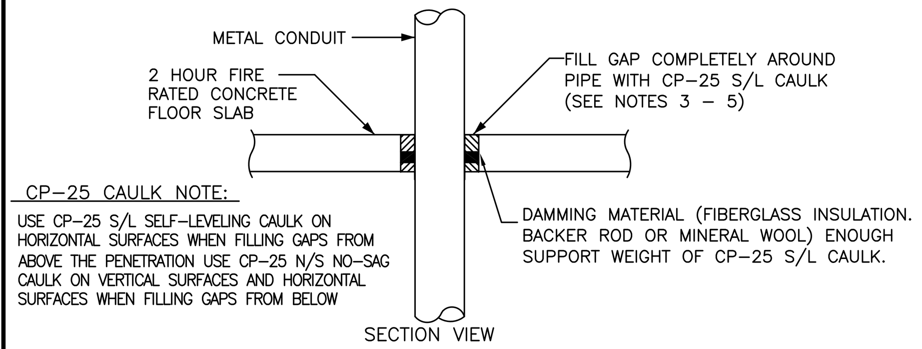

CP-25 CAULK NOTE:
USE CP-25 S/L SELF-LEVELING CAULK ON HORIZONTAL SURFACES WHEN FILLING GAPS FROM ABOVE THE PENETRATION USE CP-25 N/S NO-SAG CAULK ON VERTICAL SURFACES AND HORIZONTAL SURFACES WHEN FILLING GAPS FROM BELOW

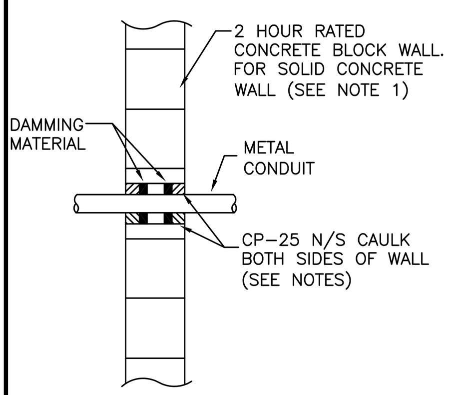

NOTES:

1. FOR SOLID CONCRETE WALLS. CENTER CP-25 N/S CAULK WITHIN WALL WITH DAMMING MATERIAL ON ONE SIDE.
2. RECOMMENDATIONS BASED ON PRODUCT PERFORMANCE PER ASTM E-814 (UL 1479) FIRE TEST AND UL CLASSIFICATION FIRE STOP SYSTEM 49.
3. WET INSTALLED DEPTH OF CP-25 CAULKS DEPENDS ON TYPE AND SIZE OF PIPE: AND DESIRED FIRE RATING

WET DEPTH	PIPE SIZE	FIRE RATING
1/2" (13mm)	MAX 8" (203mm)	2 HRS.

4. UP TO 40% SHRINKAGE OF C2-25 N/S OR S/L CAULK IS ACCEPTABLE AFTER INITIAL WET DEPTH INSTALLATION
5. MAXIMUM ANNULAR SPACE TO BE FILLED IS 2 1/2" (64mm).

NOT TO SCALE

TYPICAL FIRESTOPPING DETAIL, 1 AND 2 HOUR

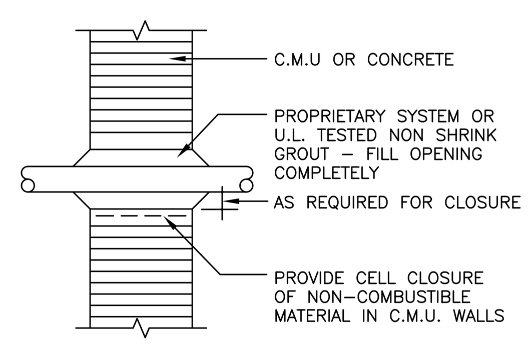

CONCRETE MASONRY OR SOLID CONCRETE WALLS

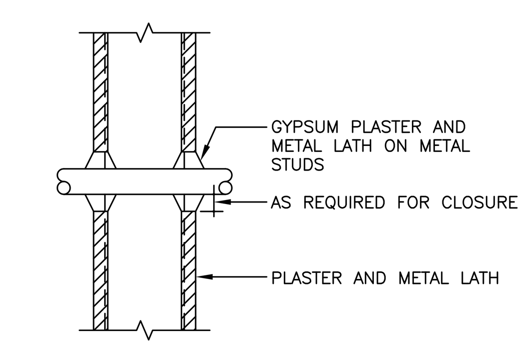

NOT TO SCALE

GYPSUM PLASTER, METAL LATH AND METAL STUD PARTITIONS

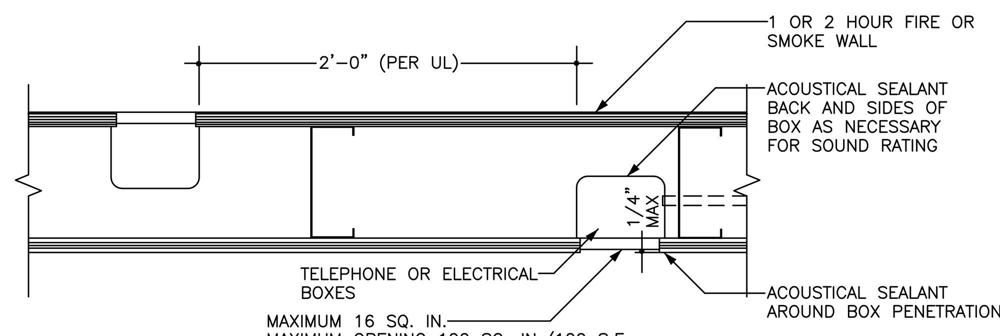

ADJACENT ELECTRICAL BOXES

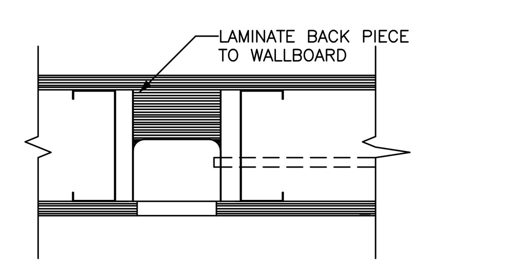

REQUIRED WHERE BOX EXCEEDS 16 SQ. INCHES OR AGGREGATE OF BOXES EXCEEDS 100 SQ. IN./100 SF OF WALL AREA.

SHALLOW FIVE SIDE BOX DETAIL

ELECTRICAL JUNCTION BOXES

1. WHEN A METALLIC JUNCTION BOX FOR ELECTRICAL RECEPTACLES OR SWITCHES IS CONTAINED WITHIN A RATED WALL OF GYPSUM DRYWALL CONSTRUCTION AND AN OPENING IS PROVIDED FOR THE BOX IN THE SURFACE OF THAT WALL, THE AREA OF THE OPENING MAY NOT EXCEED 16 SQUARE INCHES, UNLESS THE JUNCTION BOX IS ENCLOSED BY A 5"-SIDED BOX" (SEE APPROVED DETAILS).
2. THE AGGREGATE AREA OF ALL SUCH JUNCTION BOXES IN A RATED WALL NOT ENCLOSED BY "5-SIDED BOXES" DESCRIBED ABOVE SHALL NOT EXCEED 100 SQUARE FEET OF WALL AREA AS MEASURED FROM FLOOR TO STRUCTURAL DECK OR RATED MEMBRANE.
3. JUNCTION BOXES WITH OPENINGS ON OPPOSITE FACES OF RATED WALLS SHALL HAVE A HORIZONTAL SEPARATION OF 24 INCHES AS A MINIMUM, REGARDLESS OF BOX SIZE, UNLESS ENCLOSED BY "5-SIDED BOXES."
4. LOCATIONS OF STUDS DO NOT HAVE ANY BEARING ON THE ABOVE REQUIREMENTS, NOR DOES THE USE OF MINERAL WOOL FIRE SAFING ALTER THESE REQUIREMENTS.

NOT TO SCALE

ELECTICAL BOX INSTALLATION DETAIL

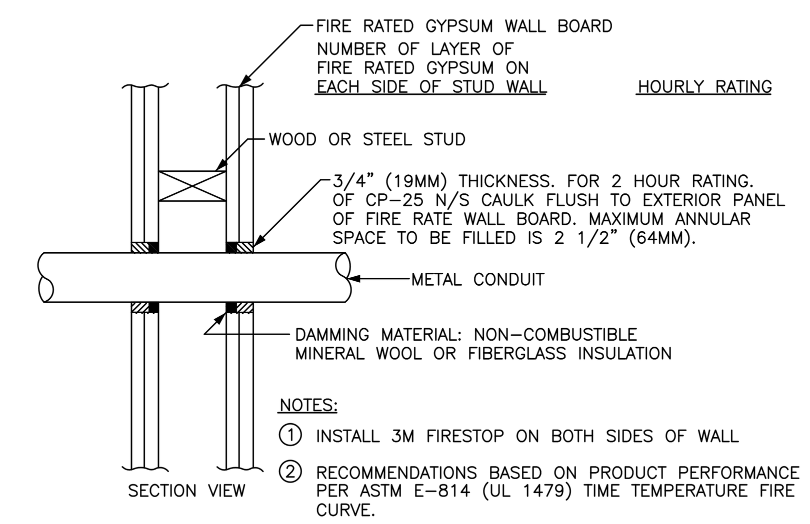

NOTES:
① INSTALL 3M FIRESTOP ON BOTH SIDES OF WALL
② RECOMMENDATIONS BASED ON PRODUCT PERFORMANCE PER ASTM E-814 (UL 1479) TIME TEMPERATURE FIRE CURVE.

NOT TO SCALE

TYPICAL FIRESTOPPING DETAIL

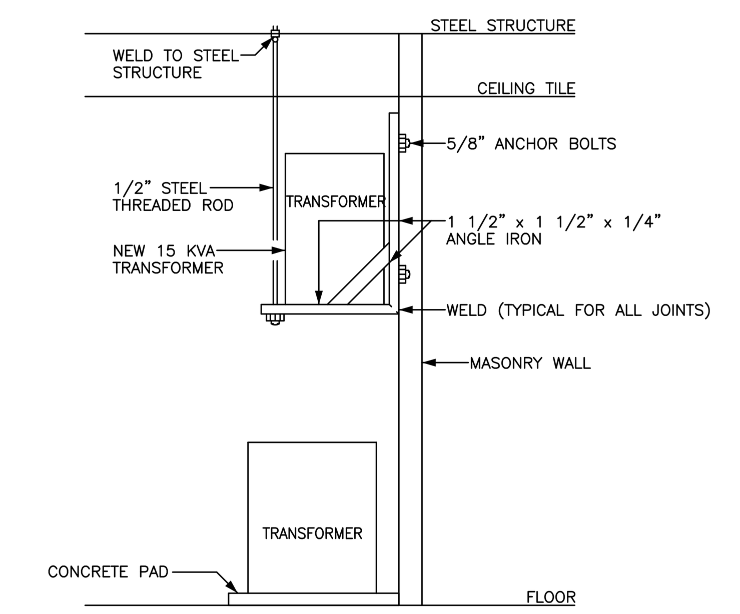

NOT TO SCALE

SUSPENDED TRANSFORMER MOUNTING DETAIL

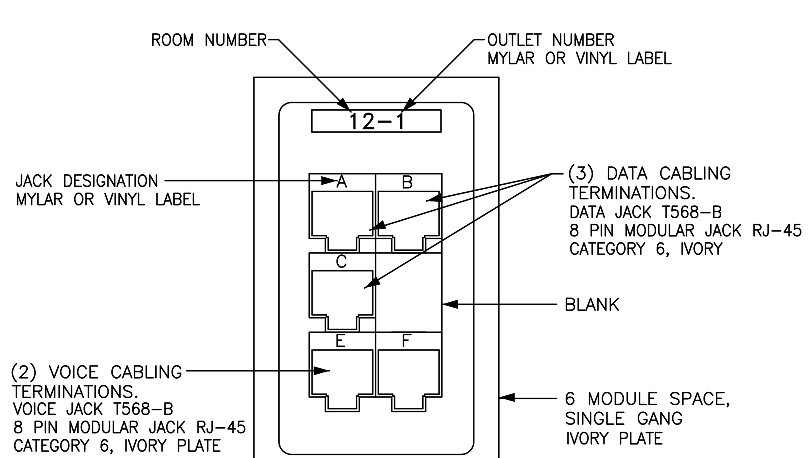

NOT TO SCALE

COMMUNICATION OUTLET DETAIL

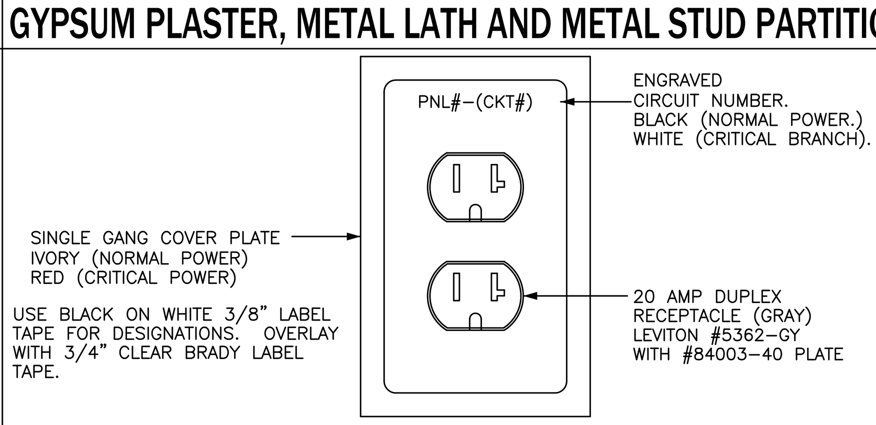

USE BLACK ON WHITE 3/8" LABEL TAPE FOR DESIGNATIONS. OVERLAY WITH 3/4" CLEAR BRADY LABEL TAPE.

PNL# = Identifying Tag of the Panel
CKT# = Identifying Number of the Circuit

NOTES:
1. INSTALL DUPLEX RECEPTACLE AS INDICATED, POSITIONED WITH THE GROUND HOLE DOWN.

NOT TO SCALE

OUTLET CIRCUIT IDENTIFICATION DETAIL

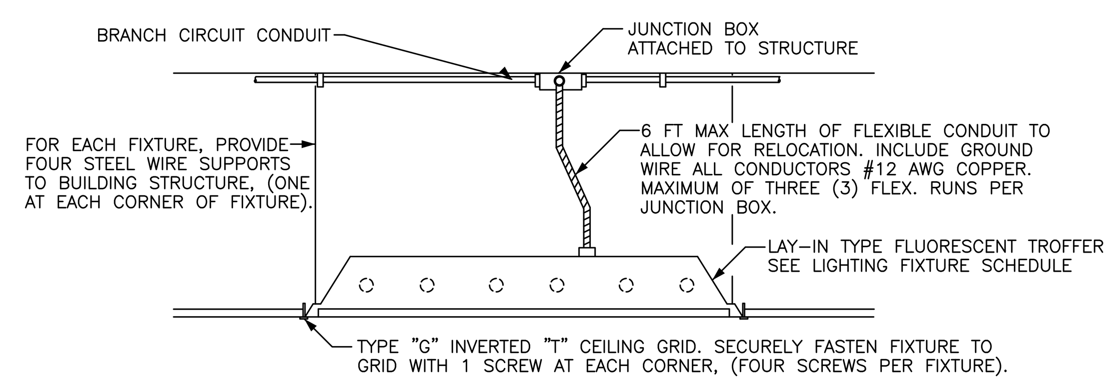

NOT TO SCALE

DETAIL-TYPICAL LAY-IN FIXTURE INSTALLATION

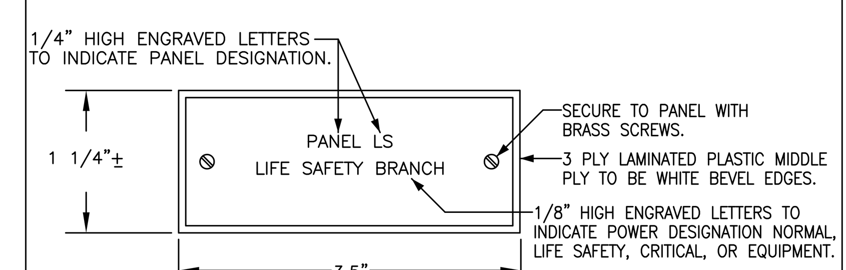

NOTE:
PROVIDE NAMEPLATES ON ALL PANELS, TRANSFER SWITCHES, DISCONNECT SWITCHES, AND BRANCH BREAKERS IN SWITCHBOARD. NAMEPLATES SHALL INDICATE PANEL DESIGNATION AND TYPE OF POWER (NORMAL POWER, LIFE SAFETY BRANCH, CRITICAL BRANCH, OR EQUIPMENT BRANCH).

NOT TO SCALE

NAME PLATE DETAIL

04-18-12 MEDICAL EQUIPMENT AND INTERIOR DESIGN REVISIONS

REVISION	DATE
65% SUBMITTAL	02/19/11
95% SUBMITTAL	03/29/11
100% SUBMITTAL	04/13/11
CONSTRUCTION SET	05/02/11
MEDICAL EQUIPMENT AND INTERIOR DESIGN REVISIONS	04/18/12

CONSULTANTS:

HADDAD ENGINEERING, INC.
2955 HARTLEY ROAD, SUITE 205 JACKSONVILLE, FL. 32257
TELEPHONE - (904) 262-5066 FAX - (904) 262-7139
CERTIFICATE OF AUTHORIZATION NO. 4000

NAMIR A. HADDAD P.E.
LICENSE NO. 31967

ARCHITECT/ENGINEERS:

ttv architects, inc.
115 EAST FORSYTH ST
JACKSONVILLE, FLORIDA 32202
T 904.798.8333
F 904.798.8335
www.ttvarch.com
FL Lic#AA0002609

Drawing Title: ELECTRICAL DIAGRAMS AND NOTES

Approved: Project Director

Project Title: SPECIALTY TREATMENT EXPANSION PROJECT- BUILDING #1

Location: JAMES A. HALEY VETERANS' HOSPITAL

Date: 02/19/11 | Checked: NH | Drawn: WH

Project Number: 673-CSI-100

Building Number: 1

Drawing Number: EP104

Dwg. 009 of 020

Office of Construction and Facilities Management
Department of Veterans Affairs

VA FORM 08-6231

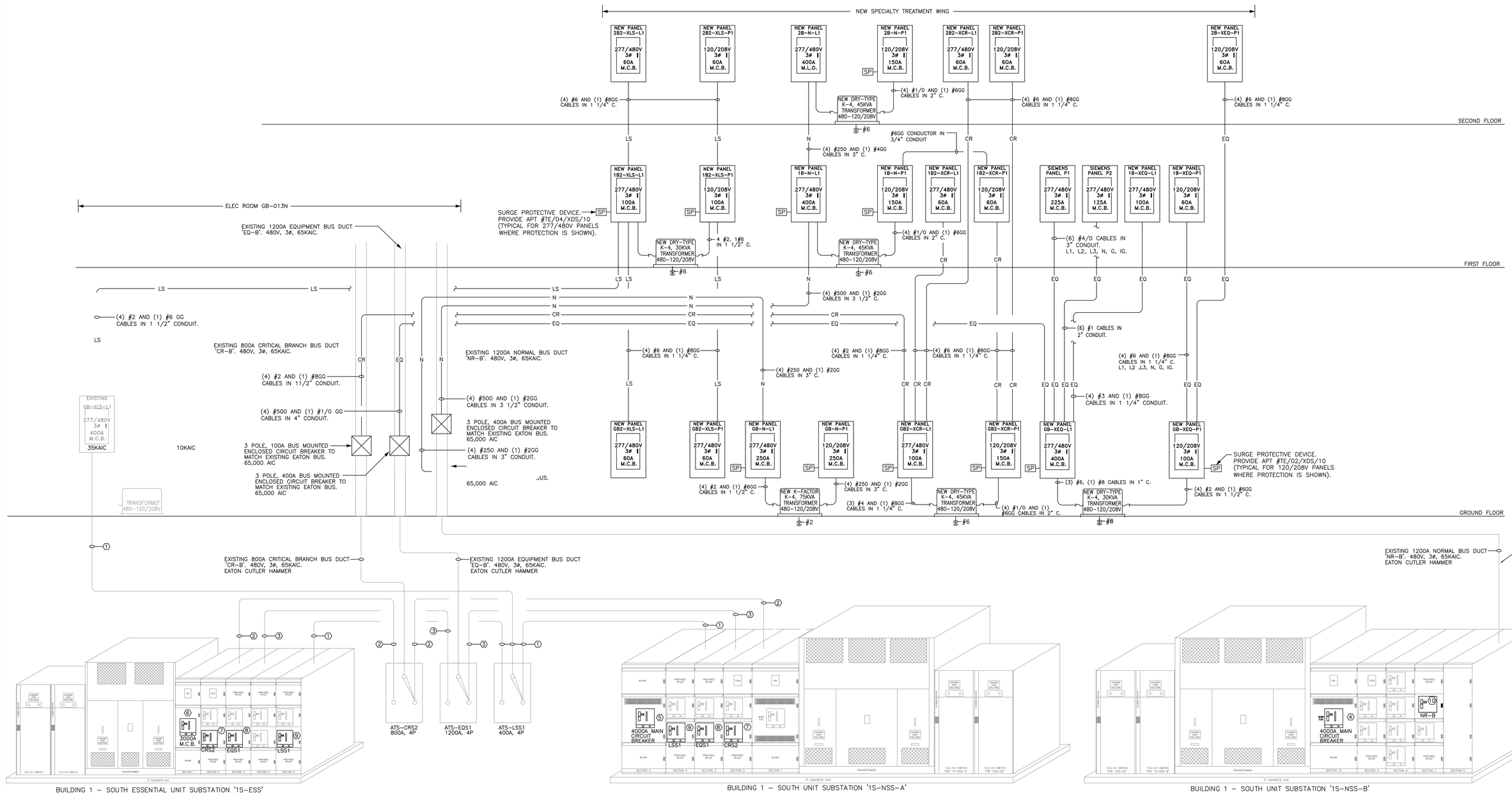

EXISTING ELECTRICAL NOTES:

① (4) #600 MCM AND (1) #2G CABLES IN 4" CONDUIT.
② 2 SETS OF ((4) #600 MCM AND (1) #1/0G IN 3 1/2" CONDUIT)
③ 3 SETS OF ((4) #600 MCM AND (1) #3/0G IN 4" CONDUIT)

④ 'TS-NSS-B'	SETTING	⑤ 'TS-NSS-A'	SETTING	⑥ 'TS-ESS'	SETTING	⑦ 'ATS-CRS2'	SETTING	⑧ 'ATS-EQS1'	SETTING	⑨ 'ATS-LSS1'	SETTING	⑩ 'NR-B'	SETTING
EATON CUTLER HAMMER		EATON CUTLER HAMMER		EATON CUTLER HAMMER		EATON CUTLER HAMMER		EATON CUTLER HAMMER		EATON CUTLER HAMMER		EATON CUTLER HAMMER	
DIGITRIP 520MC, MAGNUM DS		DIGITRIP 520MC, MAGNUM DS		DIGITRIP 520MC, MAGNUM DS		DIGITRIP 520MC, MAGNUM DS		DIGITRIP 520MC, MAGNUM DS		DIGITRIP 520MC, MAGNUM DS		DIGITRIP 520MC, MAGNUM DS	
MDS840, 4000A TRIP, 85KAIC		MDS840, 4000A TRIP, 85KAIC		MDS830, 3000A TRIP, 85KAIC		MDN608, 800A TRIP, 65KAIC		MDN616, 1200A TRIP, 65KAIC		MDN608, 400A TRIP, 65KAIC		MDN616, 1200A TRIP, 65KAIC	
GROUND SETTING	0.3	GROUND SETTING	0.3	GROUND SETTING	0.4	GROUND SETTING	N/A	GROUND SETTING	N/A	GROUND SETTING	N/A	GROUND SETTING	0.5
GROUND TIME	0.4	GROUND TIME	0.4	GROUND TIME	N/A	GROUND TIME	N/A	GROUND TIME	N/A	GROUND TIME	N/A	GROUND TIME	0.5
LONG DELAY SETTING	1.0	LONG DELAY SETTING	1.0	LONG DELAY SETTING	1.0	LONG DELAY SETTING	1.0	LONG DELAY SETTING	1.0	LONG DELAY SETTING	1.0	LONG DELAY SETTING	1.0
LONG DELAY TIME	4.0	LONG DELAY TIME	4.0	LONG DELAY TIME	4.0	LONG DELAY TIME	24.0	LONG DELAY TIME	10.0	LONG DELAY TIME	24.0	LONG DELAY TIME	7.0
SHORT DELAY SETTING	4.0	SHORT DELAY SETTING	4.0	SHORT DELAY SETTING	2.0	SHORT DELAY SETTING	8.0	SHORT DELAY SETTING	6.0	SHORT DELAY SETTING	10.0	SHORT DELAY SETTING	4.0
SHORT DELAY TIME	0.3	SHORT DELAY TIME	0.3	SHORT DELAY TIME	0.2	SHORT DELAY TIME	0.1	SHORT DELAY TIME	0.1	SHORT DELAY TIME	0.1	SHORT DELAY TIME	0.1
INSTANTANEOUS	OFF	INSTANTANEOUS	OFF	INSTANTANEOUS	6.0	INSTANTANEOUS	10.0	INSTANTANEOUS	8.0	INSTANTANEOUS	10.0	INSTANTANEOUS	6.0
MAINTENANCE MODE	0/1, R5	MAINTENANCE MODE	0/1, R5	MAINTENANCE MODE	0/1, R5	MAINTENANCE MODE	0/1, R5	MAINTENANCE MODE	0/1, R5	MAINTENANCE MODE	0/1, R1	MAINTENANCE MODE	0/1, R1

PARTIAL ELECTRICAL RISER DIAGRAM

NOT TO SCALE

ELECTRICAL NOTES:

1. CIRCUIT BREAKER COORDINATION STUDY WAS BASED ON EATON CUTLER HAMMER. PROVIDE NEW COORDINATION STUDY SIGNED BY FLORIDA REGISTERED ENGINEER IF OTHER MANUFACTURER WAS SELECTED.

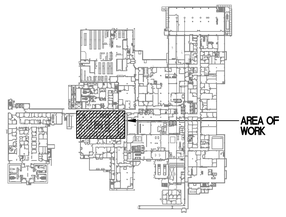

04-18-12 MEDICAL EQUIPMENT AND INTERIOR DESIGN REVISIONS

REVISION	DATE
65% SUBMITTAL	02/19/11
95% SUBMITTAL	03/29/11
100% SUBMITTAL	04/13/11
CONSTRUCTION SET	05/02/11
MEDICAL EQUIPMENT AND INTERIOR DESIGN REVISIONS	04/16/12

CONSULTANTS:

HADDAD ENGINEERING, INC.
2955 HARTLEY ROAD, SUITE 205 JACKSONVILLE, FL. 32257
TELEPHONE - (904) 262-5066 FAX - (904) 262-7139
CERTIFICATE OF AUTHORIZATION NO. 4000

NAMIR A. HADDAD P.E.
LICENSE NO. 31967

ARCHITECT/ENGINEERS:

ttv architects, inc.
110 EAST FORSYTH ST
JACKSONVILLE, FLORIDA 32202
T 904.798.8333
F 904.798.8335
www.ttvarch.com
FL Lic#AA0002600

Drawing Title: ELECTRICAL RISER DIAGRAMS

Approved: Project Director

Project Title: SPECIALTY TREATMENT EXPANSION PROJECT- BUILDING #1

Location: JAMES A. HALEY VETERANS' HOSPITAL

Date: 02/19/11 | Checked: NH | Drawn: WH

Project Number: 673-CSI-100

Building Number: 1

Drawing Number: EP105

Dwg. 010 of 020

Office of Construction and Facilities Management

Department of Veterans Affairs

VA FORM 08-6231

PANEL GB-N-L1

SURFACE MTD. CIRCUIT BREAKER TYPE — 277/480 VOLTS 3 PHASE 4 WIRE
CUTLER HAMMER TYPE PRL3A — 250 AMP MAIN CIRCUIT BREAKER

CKT NO.	DESIGNATION	CIRCUIT WIRE	CIRCUIT GND	CIRCUIT COND	CIRCUIT POLE	CIRCUIT TRIP	KVA	KVA	CIRCUIT BREAKER TRIP	CIRCUIT BREAKER POLE	CIRCUIT COND	CIRCUIT GND	CIRCUIT WIRE	DESIGNATION	CKT NO.
1	LTG – GRD FLR OFFICES	12	12	3/4	1	20	1.4								2
3	LTG – WOUND TREATMENT	12	12	3/4	1	20	2.0	75.0	110	3	1 1/2	6	2	PANEL GB-N-P1	4
5	LTG – HYPERBARIC TREATMENT	12	12	3/4	1	20	1.6							TRANSFORMER	6
7	SPARE				1	20	1.0	1.0	20	1	3/4	10	10	VAV'S GROUND FLOOR	8
9	SPARE				1	20	1.0								10
11	EWH – EXAM RM 3 & 4	10	10	3/4	1	20	3.0	17.5	45	3	3/4	10	8	AHU-112	12
13	EWH – RR GB-050E	10	10	3/4	1	20	3.0								14
15	EWH – RR GB-057/040C	10	10	3/4	1	20	3.0	0.5						SPARE	16
17	EWH – WOUND TREAT 2&3	10	10	3/4	1	20	3.0	0.5						SPARE	18
19	EWH – WOUND TREAT 1	10	10	3/4	1	20	1.5	0.6						SPARE	20
21	EWH – EXAM RM 2	10	10	3/4	1	20	1.5							SPACE	22
23	EWH – DIRTY RM GB-047	10	10	3/4	1	20	1.5							SPACE	24
25	EWH – HYPERBARIC TREAT	10	10	3/4	1	20	3.0							SPACE	26
27	SPACE													SPACE	28
29	SPACE													SPACE	30
31	SPACE													SPACE	32
33	SPACE													SPACE	34
35	SPACE													SPACE	36
37	SPACE														38
39	SPACE								30	3	3/4	8	8	SURGE PROTECTOR	40
41	SPACE														42

TOTAL KVA 123.0 — 35,000 AMP. RMS. SYMMETRICAL SHORT CIRCUIT CURRENT RATING

PANEL GB-XEQ-L1

SURFACE MTD. CIRCUIT BREAKER TYPE — 277/480 VOLTS 3 PHASE 4 WIRE
CUTLER HAMMER TYPE PRL3A — 400 AMP MAIN CIRCUIT BREAKER

CKT NO.	DESIGNATION	CIRCUIT WIRE	CIRCUIT GND	CIRCUIT COND	CIRCUIT POLE	CIRCUIT TRIP	KVA	KVA	CIRCUIT BREAKER TRIP	CIRCUIT BREAKER POLE	CIRCUIT COND	CIRCUIT GND	CIRCUIT WIRE	DESIGNATION	CKT NO.
1															2
3	SIEMENS PANEL 1	4/0	4/0	3	3	225	140.0	80.0	125	3	2	1	1	SIEMENS PANEL 2	4
5															6
7															8
9	COMPRESSOR #1	4	8	1 1/4	3	80	33.0	30.0	45	3	1	8	6	PANEL GB-XEQ-P1	10
11														TRANSFORMER	12
13															14
15	COMPRESSOR #2	4	8	1 1/4	3	80	33.0	23.0	100	3	1 1/4	8	3	PANEL 1B-XEQ-L1	16
17															18
19	SPACE													SPACE	20
21	SPACE													SPACE	22
23	SPACE													SPACE	24
25	SPACE													SPACE	26
27	SPACE													SPACE	28
29	SPACE													SPACE	30
31	SPACE													SPACE	32
33	SPACE													SPACE	34
35	SPACE													SPACE	36
37	SPACE														38
39	SPACE								30	3	3/4	8	8	SURGE PROTECTOR	40
41	SPACE														42

TOTAL KVA 306.0 — 35,000 AMP. RMS. SYMMETRICAL SHORT CIRCUIT CURRENT RATING

PANEL GB2-XCR-L1

SURFACE MTD. CIRCUIT BREAKER TYPE — 277/480 VOLTS 3 PHASE 4 WIRE
CUTLET HAMMER TYPE PRL3A — 100 AMP MAIN CIRCUIT BREAKER

CKT NO.	DESIGNATION	CIRCUIT WIRE	CIRCUIT GND	CIRCUIT COND	CIRCUIT POLE	CIRCUIT TRIP	KVA	KVA	CIRCUIT BREAKER TRIP	CIRCUIT BREAKER POLE	CIRCUIT COND	CIRCUIT GND	CIRCUIT WIRE	DESIGNATION	CKT NO.
1	EM LTG – GROUND FLOOR	12	12	3/4	1	20	0.8								2
3	SPARE				1	20	0.5	45.0	70	3	1 1/4	8	4	PANEL GB2-XCR-P1	4
5	SPARE				1	20	0.5							TRANSFORMER	6
7	SPARE				1	20	0.5								8
9	SPARE				1	20	0.5	7.0	60	3	1 1/4	8	6	PANEL 1B2-XCR-P1	10
11	SPARE				1	20	0.5								12
13	SPARE				1	20	0.5								14
15	SPARE				1	20	0.2	5.0	60	3	1 1/4	8	6	PANEL 2B2-XCR-P1	16
17	SPACE														18
19	SPACE														20
21	SPACE								30	3	3/4	8	8	SURGE PROTECTOR	22
23	SPACE														24

TOTAL KVA 61.0 — 35,000 AMP. RMS. SYMMETRICAL SHORT CIRCUIT CURRENT RATING

PANEL GB2-XLS-L1

SURFACE MTD. CIRCUIT BREAKER TYPE — 277/480 VOLTS 3 PHASE 4 WIRE
CUTLER HAMMER TYPE PRL3A — 60 AMP MAIN CIRCUIT BREAKER

CKT NO.	DESIGNATION	CIRCUIT WIRE	CIRCUIT GND	CIRCUIT COND	CIRCUIT POLE	CIRCUIT TRIP	KVA	KVA	CIRCUIT BREAKER TRIP	CIRCUIT BREAKER POLE	CIRCUIT COND	CIRCUIT GND	CIRCUIT WIRE	DESIGNATION	CKT NO.
1	SPARE				1	20	0.5	0.9	20	1	3/4	12	12	EGRESS LTG – GROUND FLR	2
3	SPARE				1	20	0.5	0.5	20	1				SPARE	4
5	SPARE				1	20	0.5	0.5	20	1				SPARE	6
7	SPARE				1	20	0.6	0.5	20	1				SPARE	8
9	SPARE				1	20	0.5	0.5	20	1				SPARE	10
11	SPARE				1	20	0.5	0.5	20	1				SPARE	12
13	SPACE													SPACE	14
15	SPACE													SPACE	16
17	SPACE													SPACE	18
19	SPACE													SPACE	20

TOTAL KVA 7.0 — 35,000 AMP. RMS. SYMMETRICAL SHORT CIRCUIT CURRENT RATING

PANEL GB-N-P1

SURFACE MTD. CIRCUIT BREAKER TYPE — 120/208 VOLTS 3 PHASE 4 WIRE
CUTLET HAMMER TYPE PRL1A — 250 AMP MAIN CIRCUIT BREAKER

CKT NO.	DESIGNATION	CIRCUIT WIRE	CIRCUIT GND	CIRCUIT COND	CIRCUIT POLE	CIRCUIT TRIP	KVA	KVA	CIRCUIT BREAKER TRIP	CIRCUIT BREAKER POLE	CIRCUIT COND	CIRCUIT GND	CIRCUIT WIRE	DESIGNATION	CKT NO.
1	REC – WAITING	12	12	3/4	1	20	1.2	0.8	20	1	3/4	12	12	REC – WOUND TREAT 1	2
3	REC – RESTROOMS	12	12	3/4	1	20	1.0	0.2	20	1	3/4	12	12	LTG – WOUND TREAT 1	4
5	REC – EXAM RM 1	12	12	3/4	1	20	0.8	0.8	20	1	3/4	12	12	REC – WOUND TREAT 2	6
7	REC – OFFICE 1	12	12	3/4	1	20	0.8	0.2	20	1	3/4	12	12	LTG – WOUND TREAT 2	8
9	REC – OFFICE 2 & 3	10	10	3/4	1	20	1.5	0.8	20	1	3/4	12	12	REC – WOUND TREAT 3	10
11	SPARE	10	10	3/4	1	20	0.8	0.2	20	1	3/4	12	12	LTG – WOUND TREAT 3	12
13	REC – RR GB-050E	10	10	3/4	1	20	0.5	0.8	20	1	3/4	12	12	REC – NURSE STATION	14
15	REC – HYPERBARIC TREAT	10	10	3/4	1	20	0.8	0.6	20	1	3/4	12	12	REC – HALL	16
17	REC – DIRTY/CLEAN RMS	12	12	3/4	1	20	1.2	0.8	20	1	3/4	12	12	REC – EXAM RM 2	18
19	REC – HYPERBARIC TREAT	10	10	3/4	1	20	0.8	0.8	20	1	3/4	12	12	REC – EXAM RM 3	20
21	REC – MECH/ELEC RM	12	12	3/4	1	20	0.6	0.8	20	1	3/4	12	12	REC – EXAM RM 4	22
23	SPARE				1	20	0.6	1.0	20	1	3/4	12	12	REC – BREAK/CONF RM	24
25	TEMP A/C HYPERBARIC RM	10	10	3/4	2	30	4.5	1.0	20	1		12	12	REC – BREAK/CONF RM	26
27								1.0	20	1	3/4	12	12	REC – TEL/DATA RM	28
29	SPARE				1	20	0.5	1.0	20	1		12	12	REC – TEL/DATA RM	30
31	SPARE				1	20	0.5	0.5	20	1	3/4	12	12	EMCS PANEL	32
33	SPARE				1	20	0.5	0.5	20	1				SPARE	34
35	SPARE				1	20	0.5	0.5	20	1				SPARE	36
37	SPARE				1	20	0.5								38
39	SPARE				1	20	0.5		30	3	3/4	8	8	SURGE PROTECTOR	40
41	SPARE				1	20	0.4								42

TOTAL KVA 83.0 — 10,000 AMP. RMS. SYMMETRICAL SHORT CIRCUIT CURRENT RATING

PANEL GB-XEQ-P1

SURFACE MTD. CIRCUIT BREAKER TYPE — 120/208 VOLTS 3 PHASE 4 WIRE
CUTLER HAMMER TYPE PRL1A — 100 AMP MAIN CIRCUIT BREAKER

CKT NO.	DESIGNATION	CIRCUIT WIRE	CIRCUIT GND	CIRCUIT COND	CIRCUIT POLE	CIRCUIT TRIP	KVA	KVA	CIRCUIT BREAKER TRIP	CIRCUIT BREAKER POLE	CIRCUIT COND	CIRCUIT GND	CIRCUIT WIRE	DESIGNATION	CKT NO.
1	DOOR CONTROLS GRD FLR	10	10	3/4	1	20	0.3								2
3	SINK/TOILET RR GB-050E	10	10	3/4	1	20	0.3	8.0	60	3	3/4	8	6	PANEL 1B-XEQ-P1	4
5	SINK/TOILET RR GB-057	10	10	3/4	1	20	0.3								6
7	PYXIS CABINET GB-050B	10	10	3/4	1	20	1.0								8
9	PYXIS CABINET GB-045	10	10	3/4	1	20	1.0	5.0	60	3	3/4	8	6	PANEL 2B-XEQ-P1	10
11	SINKS WOUND TREATMENT	12	12	3/4	1	20	0.3								12
13	DIRTY RM SINK GB-047	12	12	3/4	1	20	0.3	0.5	20	1				SPARE	14
15	EXAM ROOM SINKS	12	12	3/4	1	20	0.3	0.5	20	1				SPARE	16
17	DOOR CONTROL GND FLOOR	10	10	3/4	1	20	0.3	0.5	20	1				SPARE	18
19	CHILLER	12	12	3/4	2	15	1.3	0.5	20	1				SPARE	20
21								0.5	20	1				SPARE	22
23	CHILLER	12	12	3/4	2	15	1.3	0.5	20	1				SPARE	24
25								0.5	20	1				SPARE	26
27	SPACE							0.5	20	1				SPARE	28
29	SPACE							0.9	20	1				SPARE	30
31	SPACE														32
33	SPACE														34
35	SPACE														36
37	SPACE														38
39	SPACE								30	3	3/4	8	8	SURGE PROTECTOR	40
41	SPACE														42

TOTAL KVA 22.0 — 10,000 AMP. RMS. SYMMETRICAL SHORT CIRCUIT CURRENT RATING

PANEL GB2-XCR-P1

SURFACE MTD. CIRCUIT BREAKER TYPE — 120/208 VOLTS 3 PHASE 4 WIRE
CUTLER HAMMER TYPE PRL1A — 150 AMP MAIN CIRCUIT BREAKER

CKT NO.	DESIGNATION	CIRCUIT WIRE	CIRCUIT GND	CIRCUIT COND	CIRCUIT POLE	CIRCUIT TRIP	KVA	KVA	CIRCUIT BREAKER TRIP	CIRCUIT BREAKER POLE	CIRCUIT COND	CIRCUIT GND	CIRCUIT WIRE	DESIGNATION	CKT NO.
1	TEL/DATA RM GB-040D	12	12	3/4	2	20	1.0								2
3	TEL/DATA RM GB-040D	12	12				1.0	16.0	60	3	1	10	6	PANEL 1B2-XCR-P1	4
5	REC. NURSE STATION	12	12	3/4	1	20	1.0								6
7	SPARE				1	20	1.0								8
9	REC. WOUND TREATMENT 1	12	12	3/4	1	20	1.0	12.0	60	3	1	10	6	PANEL 2B2-XCR-P1	10
11	REC. WOUND TREATMENT 2	12	12	3/4	1	20	1.0								12
13	REC. WOUND TREATMENT 3	12	12	3/4	1	20	1.0							SPACE	14
15	REC. RECPTION	12	12	3/4	1	20	1.0							SPACE	16
17	REC. EXAM ROOM	12	12	3/4	1	20	0.5							SPACE	18
19	REC. EXAM ROOM	12	12	3/4	1	20	0.5							SPACE	20
21	SPACE													SPACE	22
23	SPACE													SPACE	24
25	SPACE													SPACE	26
27	SPACE													SPACE	28
29	SPACE													SPACE	30
31	SPACE													SPACE	32
33	SPACE													SPACE	34
35	SPACE													SPACE	36
37	SPACE														38
39	SPACE								30	3	3/4	8	8	SURGE PROTECTOR	40
41	SPACE														42

TOTAL KVA 37.0 — 10,000 AMP. RMS. SYMMETRICAL SHORT CIRCUIT CURRENT RATING

PANEL GB2-XLS-P1

SURFACE MTD. CIRCUIT BREAKER TYPE — 120/208 VOLTS 3 PHASE 4 WIRE
CUTLER HAMMER TYPE PRL1A — 60 AMP MAIN CIRCUIT BREAKER

CKT NO.	DESIGNATION	CIRCUIT WIRE	CIRCUIT GND	CIRCUIT COND	CIRCUIT POLE	CIRCUIT TRIP	KVA	KVA	CIRCUIT BREAKER TRIP	CIRCUIT BREAKER POLE	CIRCUIT COND	CIRCUIT GND	CIRCUIT WIRE	DESIGNATION	CKT NO.
1	PAGING AMPLIFIER GB-040D	12	12	3/4	1	20	1.0	0.5	50	2	3/4	8	8	HYPERBARIC CONTROL PANEL ②	2
3	SPARE				1	20	1.0								4
5	SPARE				1	20	1.0	0.5	50	2	3/4	8	8	HYPERBARIC CONTROL PANEL ②	6
7	SPARE				1	20	1.0								8
9	MED GAS PANEL GB-055	10	10	3/4	1	20	1.0	0.5	20	1				SPARE	10
11	SPARE				1	20	0.5	0.5	20	1				SPARE	12
13	SPACE													SPACE	14
15	SPACE													SPACE	16
17	SPACE													SPACE	18
19	SPACE													SPACE	20

TOTAL KVA 9.0 — 10,000 AMP. RMS. SYMMETRICAL SHORT CIRCUIT CURRENT RATING

① EXISTING PANEL GB-XLS-L1

SURFACE MTD. CIRCUIT BREAKER TYPE — 277/480 VOLTS 3 PHASE 4 WIRE
CUTLER HAMMER TYPE PRL3A — 400 AMP MAIN CIRCUIT BREAKER

CKT NO.	DESIGNATION	CIRCUIT WIRE	CIRCUIT GND	CIRCUIT COND	CIRCUIT POLE	CIRCUIT TRIP	KVA	KVA	CIRCUIT BREAKER TRIP	CIRCUIT BREAKER POLE	CIRCUIT COND	CIRCUIT GND	CIRCUIT WIRE	DESIGNATION	CKT NO.
1															2
3	30KVA TRANSFORMER				3	60		0.7	100	3	1 1/4	8	3	PANEL 1B2-XLS-L1	4
5	PANEL GB-XLS-P1														6
7	SPARE				1	20			20	1				SPARE	8
9	SPARE				1	20			20	1				SPARE	10
11	SPARE				1	20			20	1				SPARE	12
13	SPARE				1	20			20	1				SPARE	14
15	SPARE				1	20			20	1				SPARE	16
17	SPARE				1	20			20	1				SPARE	18
19	SPARE				1	20			20	1				SPARE	20
21	SPARE				1	20			20	1				SPARE	22
23														SPACE	24
25	SPARE				3	100								SPACE	26
27														SPACE	28
29	SPACE													SPACE	30
31	SPACE													SPACE	32
33	SPACE													SPACE	34
35	SPACE													SPACE	36
37	SPACE													SPACE	38
39	SPACE													SPACE	40
41	SPACE													SPACE	42

TOTAL KVA _____ — 35,000 AMP. RMS. SYMMETRICAL SHORT CIRCUIT CURRENT RATING

PANEL NOTES:

① CONTRACTOR SHALL TRACE ALL CIRCUITS AND PROVIDE NEW TYPED PANEL SCHEDULE INDICATING EXACT TYPES OF LOADS AND LOCATION, (EXAMPLE: LIGHTING ROOM 503), OF ALL NEW AND EXISTING CIRCUITS.

② CONTRACTOR SHALL FIELD COORDINATE WITH HYPERBARIC EQUIPMENT PROVIDER FOR EXACT ELECTRICAL REQUIREMENTS. PROVIDE CIRCUIT BREAKER SIZE AND CABLE SIZES PER NEC TO MATCH ACTUAL PROVIDED EQUIPMENT.

04-18-12 MEDICAL EQUIPMENT AND INTERIOR DESIGN REVISIONS

REVISION	DATE
65% SUBMITTAL	02/19/11
95% SUBMITTAL	03/29/11
100% SUBMITTAL	04/19/11
CONSTRUCTION SET	05/02/11
MEDICAL EQUIPMENT AND INTERIOR DESIGN REVISIONS	04/18/12

CONSULTANTS:

HADDAD ENGINEERING, INC.
2955 HARTLEY ROAD, SUITE 205 JACKSONVILLE, FL. 32257
TELEPHONE - (904) 262-5066 FAX - (904) 262-7139
CERTIFICATE OF AUTHORIZATION NO. 4000

NAMIR A. HADDAD P.E.
LICENSE NO. 31967

ARCHITECT/ENGINEERS:

ttv architects, inc.
110 EAST FORSYTH ST
JACKSONVILLE, FLORIDA 32202
P 904.798.8333
F 904.798.8335
www.ttvarch.com
FL Lic#AA0002609

Drawing Title: ELECTRICAL PANEL SCHEDULES

Approved: Project Director

Project Title: SPECIALTY TREATMENT EXPANSION PROJECT- BUILDING #1

Location: JAMES A. HALEY VETERANS' HOSPITAL

Date: 02/19/11 | Checked: NH | Drawn: WH

Project Number: 673-CSI-100

Building Number: 1

Drawing Number: EP106

Dwg. 011 of 020

Office of Construction and Facilities Management

Department of Veterans Affairs

VA FORM 08-6231

PANEL 1B2–XLS–L1

SURFACE MTD. CIRCUIT BREAKER TYPE — 277/480 VOLTS 3 PHASE 4 WIRE
CUTLER HAMMER TYPE PRL3A — 100 AMP MAIN CIRCUIT BREAKER

CKT NO.	DESIGNATION	CIRCUIT WIRE	CIRCUIT GND	CIRCUIT COND	CIRCUIT BREAKER POLE	CIRCUIT BREAKER TRIP	KVA	KVA	CIRCUIT BREAKER TRIP	CIRCUIT BREAKER POLE	CIRCUIT COND	CIRCUIT GND	CIRCUIT WIRE	DESIGNATION	CKT NO.
1								0.7	20	1	3/4	12	12	EGRESS LTG – FIRST FLR	2
3	30KVA TRANSFORMER	6	8	1	3	45	30.0								4
5	PANEL 1B2–XLS–P1							7.0	60	3	1 1/4	8	6	PANEL GB2–XLS–L1	6
7	SPARE				1	20	0.8								8
9	SPARE				1	20	0.5								10
11	SPARE				1	20	0.5	7.0	60	3	1 1/4	8	6	PANEL 2B2–XLS–L1	12
13	SPARE				1	20	0.5								14
15	SPARE				1	20	0.5	0.5	20	1				SPARE	16
17	SPARE				1	20	0.5	0.5	20	1				SPARE	18
19	SPARE				1	20	0.5	0.5	20	1				SPARE	20
21	SPARE				1	20	0.5	0.5	20	1				SPARE	22
23	SPACE													SPARE	24
25	SPACE														26
27	SPACE							30	3	3/4	8	8		SURGE PROTECTOR	28
29	SPACE														30

TOTAL KVA 36.0 — 35,000 AMP. RMS. SYMMETRICAL SHORT CIRCUIT CURRENT RATING

PANEL 1B2–XCR–L1

SURFACE MTD. CIRCUIT BREAKER TYPE — 277/480 VOLTS 3 PHASE 4 WIRE
CUTLER HAMMER TYPE PRL3A — 60 AMP MAIN CIRCUIT BREAKER

CKT NO.	DESIGNATION	CIRCUIT WIRE	CIRCUIT GND	CIRCUIT COND	CIRCUIT BREAKER POLE	CIRCUIT BREAKER TRIP	KVA	KVA	CIRCUIT BREAKER TRIP	CIRCUIT BREAKER POLE	CIRCUIT COND	CIRCUIT GND	CIRCUIT WIRE	DESIGNATION	CKT NO.
1	EM LTG – FIRST FLOOR	12	12	3/4	1	20	1.6							SPACE	2
3	EM LTG – FIRST FLOOR	12	12	3/4	1	20	1.5							SPACE	4
5	SPARE				1	20	0.5							SPACE	6
7	SPARE				1	20	0.5							SPACE	8
9	SPARE				1	20	0.5							SPACE	10
11	SPARE				1	20	0.5							SPACE	12
13	SPARE				1	20	0.5							SPACE	14
15	SPARE				1	20	0.5							SPACE	16
17	SPARE				1	20	0.5							SPACE	18
19	SPARE				1	20	0.4							SPACE	20

TOTAL KVA 7.0 — 10,000 AMP. RMS. SYMMETRICAL SHORT CIRCUIT CURRENT RATING

PANEL 1B–N–L1

SURFACE MTD. CIRCUIT BREAKER TYPE — 277/480 VOLTS 3 PHASE 4 WIRE
CUTLER HAMMER TYPE PRL3A — 400 AMP MAIN CIRCUIT BREAKER

CKT NO.	DESIGNATION	CIRCUIT WIRE	CIRCUIT GND	CIRCUIT COND	CIRCUIT BREAKER POLE	CIRCUIT BREAKER TRIP	KVA	KVA	CIRCUIT BREAKER TRIP	CIRCUIT BREAKER POLE	CIRCUIT COND	CIRCUIT GND	CIRCUIT WIRE	DESIGNATION	CKT NO.
1	SPARE				1	20	1.0								2
3	EWH – 1ST FLR RR	10	10	3/4	3	20	3.0	33.0	70	3	1 1/4	8	4	PANEL 1BNP1	4
5	EWH – 1ST FLR DIRTY RM	10	10	3/4	3	20	1.5							TRANSFORMER	6
7	EWH – 1ST FLR HALLWAY	10	10	3/4	3	20	3.0							SPACE	8
9	EWH – CONTROL ROOM	10	10	3/4	3	20	1.5							SPACE	10
11	LTG – 1ST FLR PROCEDURE	10	10	3/4	1	20	1.6							SPACE	12
13	LTG – 1ST FLR NURSING	10	10	3/4	1	20	1.3							SPACE	14
15	SPARE				1	20	0.5							SPACE	16
17	SPARE				1	20	0.5							SPACE	18
19	SPARE				1	20	0.5							SPACE	20
21	SPARE				1	20	0.5							SPACE	22
23	SPARE				1	20	0.5							SPACE	24
25	SPARE				1	20	0.5							SPACE	26
27	SPARE				1	20	0.5							SPACE	28
29	SPARE				1	20	0.5							SPACE	30
31	SPARE				1	20	0.6							SPACE	32
33	SPACE													SPACE	34
35	SPACE													SPACE	36
37															38
39	PANEL 2B–N–11	250	4	3	3	250	171		30	3	3/4	8		SURGE PROTECTOR	40
41															42

TOTAL KVA 415.0 — 18,000 AMP. RMS. SYMMETRICAL SHORT CIRCUIT CURRENT RATING

PANEL 1B–XEQ–L1

SURFACE MTD. CIRCUIT BREAKER TYPE — 277/480 VOLTS 3 PHASE 4 WIRE
CUTLER HAMMER TYPE PRL3A — 100 AMP MAIN CIRCUIT BREAKER

CKT NO.	DESIGNATION	CIRCUIT WIRE	CIRCUIT GND	CIRCUIT COND	CIRCUIT BREAKER POLE	CIRCUIT BREAKER TRIP	KVA	KVA	CIRCUIT BREAKER TRIP	CIRCUIT BREAKER POLE	CIRCUIT COND	CIRCUIT GND	CIRCUIT WIRE	DESIGNATION	CKT NO.
1	VAV'S/SF'S SECOND FLOOR	10	10	3/4	1	20	0.5								2
3	SPARE				1	20	0.5	22.5	60	3	1	10	6	AHU–113 RM 1B–161	4
5	SPARE				1	20	0.5								6
7	SPARE				1	20	0.5							SPACE	8
9	SPARE				1	20	0.5							SPACE	10
11	SPARE				1	20	0.5							SPACE	12
13	SPARE				1	20	0.5							SPACE	14
15	SPARE				1	20	0.5							SPACE	16
17	SPARE				1	20	0.5							SPACE	18
19	SPARE				1	20	0.6							SPACE	20
21	SPACE													SPACE	22
23	SPACE													SPACE	24
25	SPACE													SPACE	26
27	SPACE													SPACE	28
29	SPACE													SPACE	30
31	SPACE													SPACE	32
33	SPACE													SPACE	34
35	SPACE													SPACE	36
37	SPACE													SPACE	38
39	SPACE													SPACE	40
41	SPACE													SPACE	42

TOTAL KVA 23.0 — 18,000 AMP. RMS. SYMMETRICAL SHORT CIRCUIT CURRENT RATING

PANEL 1B2–XLS–P1

SURFACE MTD. CIRCUIT BREAKER TYPE — 120/208 VOLTS 3 PHASE 4 WIRE
CUTLER HAMMER TYPE PRL1A — 100 AMP MAIN CIRCUIT BREAKER

CKT NO.	DESIGNATION	CIRCUIT WIRE	CIRCUIT GND	CIRCUIT COND	CIRCUIT BREAKER POLE	CIRCUIT BREAKER TRIP	KVA	KVA	CIRCUIT BREAKER TRIP	CIRCUIT BREAKER POLE	CIRCUIT COND	CIRCUIT GND	CIRCUIT WIRE	DESIGNATION	CKT NO.
1	MED GAS PANEL 1B–167	10	10	3/4	1	20	0.5								2
3	MED GAS PANEL 1B–164	10	10	3/4	1	20	1.0	9.0	60	3	1 1/4	8	6	PANEL GB2–XLS–P1	4
5	MED GAS PANEL 1B–168	10	10	3/4	1	20	1.0								6
7	PAGING AMPLIFIER	12	12	3/4	1	20	0.6								8
9	SPARE				1	20	0.5	7.0	60	3	1 1/4	8	6	PANEL 2B2–XLS–P1	10
11	SPARE				1	20	0.4								12
13	SPARE				1	20			20	1				SPARE	14
15	SPARE				1	20			20	1				SPARE	16
17	SPARE				1	20			20	1				SPARE	18
19	SPARE				1	20			20	1				SPARE	20
21	SPARE				1	20			20	1				SPARE	22
23	SPARE				1	20			20	1				SPARE	24
25	REC – CONTROL ROOM					20	1.0								26
27									30	3	3/4	8	8	SURGE PROTECTOR	28
29	REC – CONTROL ROOM	12	12	3/4	2	20	1.0								30

TOTAL KVA 23.0 — 10,000 AMP. RMS. SYMMETRICAL SHORT CIRCUIT CURRENT RATING

PANEL 1B2–XCR–P1

SURFACE MTD. CIRCUIT BREAKER TYPE — 120/208 VOLTS 3 PHASE 4 WIRE
CUTLER HAMMER TYPE PRL1A — 60 AMP MAIN CIRCUIT BREAKER

CKT NO.	DESIGNATION	CIRCUIT WIRE	CIRCUIT GND	CIRCUIT COND	CIRCUIT BREAKER POLE	CIRCUIT BREAKER TRIP	KVA	KVA	CIRCUIT BREAKER TRIP	CIRCUIT BREAKER POLE	CIRCUIT COND	CIRCUIT GND	CIRCUIT WIRE	DESIGNATION	CKT NO.
1	TEL/DATA RM 1B–160	10	10	3/4	2	20	1.0	1.0	20	1	3/4	10	10	REC – PATIENT BEDS 1B–169	2
3	TEL/DATA RM 1B–160	10	10				1.0	1.0	20	1	3/4	10	10	REC – PATIENT BEDS 1B–169	4
5	REC – NURSE STATION	10	10	3/4	1	20	0.5	1.0	20	1	3/4	10	10	REC – PATIENT BEDS 1B–169	6
7	REC – NURSE STATION	10	10	3/4	1	20	0.5	1.0	20	1	3/4	10	10	REC – PATIENT BEDS 1B–169	8
9	REC – ANGIO 1B–168	12	12	3/4	1	20	0.5	1.0	20	1	3/4	10	10	REC – PATIENT BEDS 1B–169	10
11	REC – ANGIO 1B–164'	12	12	3/4	1	20	0.5	1.0	20	1	3/4	10	10	REC – PATIENT BEDS 1B–169	12
13	REC – CONTROL ROOM	12	12			20	1.0	1.0	20	1	3/4	10	10	REC – PATIENT BEDS 1B–169	14
15	REC – CONTROL ROOM	12	12	3/4	3	20	1.0	1.0	20	1	3/4	10	10	REC – PATIENT BEDS 1B–169	16
17	REC – CONTROL ROOM	12	12			20	1.0	0.5	20	1	3/4	10	10	REC – PATIENT BEDS 1B–169	18
19	REC – CONTROL ROOM	12	12			20	1.0	0.5	20	1	3/4	10	10	REC – PATIENT BEDS 1B–169	20
21	REC – CONTROL ROOM	12	12	3/4	3	20	1.0							SPACE	22
23	REC – CONTROL ROOM	12	12			20	1.0							SPACE	24
25	SPACE													SPACE	26
27	SPACE													SPACE	28
29	SPACE													SPACE	30

TOTAL KVA 16.0 — 10,000 AMP. RMS. SYMMETRICAL SHORT CIRCUIT CURRENT RATING

PANEL 1B–N–P1

SURFACE MTD. CIRCUIT BREAKER TYPE — 120/208 VOLTS 3 PHASE 4 WIRE
CUTLET HAMMER TYPE PRL1A — 150 AMP MAIN CIRCUIT BREAKER

CKT NO.	DESIGNATION	CIRCUIT WIRE	CIRCUIT GND	CIRCUIT COND	CIRCUIT BREAKER POLE	CIRCUIT BREAKER TRIP	KVA	KVA	CIRCUIT BREAKER TRIP	CIRCUIT BREAKER POLE	CIRCUIT COND	CIRCUIT GND	CIRCUIT WIRE	DESIGNATION	CKT NO.
1	REC – MECH/ELEC	12	12	3/4	1	20	0.6	1.0	20	1	3/4	10	10	REC – PATIENT BEDS	2
3	SPARE				1	20	0.5	1.0	20	1	3/4	10	10	REC – PATIENT BEDS	4
5	REC – CONTROL ROOM	12	12	3/4	1	20	1.0	1.0	20	1	3/4	10	10	REC – PATIENT BEDS	6
7	SPARE				1	20	0.5	1.0	20	1	3/4	10	10	REC – PATIENT BEDS	8
9	REC – HALLWAY	12	12	3/4	1	20	0.8	1.0	20	1	3/4	10	10	REC – PATIENT BEDS	10
11	REC – CONSULTANT 1B–170	10	10	3/4	1	20	1.4	1.0	20	1				SPARE	12
13	REC – OFFICE 1B–173	10	10	3/4	1	20	1.2	0.8	20	1				SPARE	14
15	REC – RR 1B–171/172	10	10	3/4	1	20	1.0	0.8	20	1	3/4	10	10	REC – NURSE STATION	16
17	REC – WATER COOLERS	10	10	3/4	1	20	1.0	1.0	20	1				SPARE	18
19	SPARE				1	20	0.5	1.0	20	1				SPARE	20
21	REC – RM 1B–162/176	10	10	3/4	1	20	1.0	1.0	20	1				SPARE	22
23	REC – NURSE STATION	10	10	3/4	1	20	1.0	1.0	20	1				SPARE	24
25	SPARE				1	20	0.5	1.0	20	1				SPARE	26
27	SPARE				1	20	0.5	1.0	20	1				SPARE	28
29	SPARE				1	20	0.5	1.0	20	1	3/4	12	12	REC – TEL/DATA ROOM	30
31	SPARE				1	20	0.5	1.0	20	1		12	12	REC – TEL/DATA ROOM	32
33	SPARE				1	20	0.5	1.0	20	1	3/4	12	12	REC – TEL/DATA ROOM	34
35	SPARE				1	20	0.5							SPACE	36
37	SPARE				1	20	0.5								38
39	SPARE				1	20	0.5		30	3	3/4	8	8	SURGE PROTECTOR	40
41	SPARE				1	20	0.5								42

TOTAL KVA 33.0 — 10,000 AMP. RMS. SYMMETRICAL SHORT CIRCUIT CURRENT RATING

PANEL 1B–XEQ–P1

SURFACE MTD. CIRCUIT BREAKER TYPE — 120/208 VOLTS 3 PHASE 4 WIRE
CUTLER HAMMER TYPE PRL1A — 60 AMP MAIN CIRCUIT BREAKER

CKT NO.	DESIGNATION	CIRCUIT WIRE	CIRCUIT GND	CIRCUIT COND	CIRCUIT BREAKER POLE	CIRCUIT BREAKER TRIP	KVA	KVA	CIRCUIT BREAKER TRIP	CIRCUIT BREAKER POLE	CIRCUIT COND	CIRCUIT GND	CIRCUIT WIRE	DESIGNATION	CKT NO.
1	PYXIS CABINET 1B–165	10	10	3/4	1	20	1.0	0.3	20	1	3/4	10	10	DOOR CONTROL 1ST FLOOR	2
3	PYXIS CABINET 1B–165	10	10		1	20	1.0	0.3	20	1	3/4	10	10	DOOR CONTROL 1ST FLOOR	4
5	DOOR CONTROL 1ST FLOOR	10	10	3/4	1	20	0.5	0.3	20	1	3/4	10	10	DOOR CONTROL 1ST FLOOR	6
7	REC – EMCS PANEL	12	12	3/4	1	20	0.5	0.3	20	1	3/4	10	10	DOOR CONTROL 1ST FLOOR	8
9	SPARE				1	20	0.5	0.3	20	1	3/4	10	10	DOOR CONTROL 1ST FLOOR	10
11	SPARE				1	20	0.5	0.3	20	1	3/4	10	10	SINK/TOILET 1ST FLOOR	12
13	SPARE				1	20	0.5	0.3	20	1	3/4	10	10	DIRTY ROOM SINKS 1B–176	14
15	SPARE				1	20	0.5	0.3	20	1	3/4	10	10	SINKS 1ST FLOOR HALL	16
17	SPARE				1	20	0.3	0.3	20	1	3/4	10	10	SINK ANGIO CONTROL ROOM	18
19															20
21															22
23															24
25															26
27															28
29															30
31															32
33															34
35															36
37	SPACE													SPACE	38
39	SPACE													SPACE	40
41	SPACE													SPACE	42

TOTAL KVA 8.0 — 10,000 AMP. RMS. SYMMETRICAL SHORT CIRCUIT CURRENT RATING

04-18-12 MEDICAL EQUIPMENT AND INTERIOR DESIGN REVISIONS

REVISION	DATE
65% SUBMITTAL	02/19/11
95% SUBMITTAL	03/29/11
100% SUBMITTAL	04/13/11
CONSTRUCTION SET	05/02/11
MEDICAL EQUIPMENT AND INTERIOR DESIGN REVISIONS	04/18/12

CONSULTANTS:

HADDAD ENGINEERING, INC.
2955 HARTLEY ROAD, SUITE 205 JACKSONVILLE, FL. 32257
TELEPHONE - (904) 262-5066 FAX - (904) 262-7139
CERTIFICATE OF AUTHORIZATION NO. 4000

NAMIR A. HADDAD P.E.
LICENSE NO. 31967

ARCHITECT/ENGINEERS:

ttv architects, inc.
110 EAST FORSYTH ST
JACKSONVILLE, FLORIDA 32202
T 904.798.8333
F 904.798.8335
www.ttvarch.com
FL Lic#AA0002809

Drawing Title: ELECTRICAL PANEL SCHEDULES

Approved: Project Director

Project Title: SPECIALTY TREATMENT EXPANSION PROJECT- BUILDING #1

Location: JAMES A. HALEY VETERANS' HOSPITAL

Date: 02/19/11 | Checked: NH | Drawn: WH

Project Number: 673-CSI-100

Building Number: 1

Drawing Number: EP107

Dwg. 012 of 020

Office of Construction and Facilities Management

Department of Veterans Affairs

VA FORM 08–6231

PANEL 2B–N–L1

SURFACE MTD. CIRCUIT BREAKER TYPE
CUTLER HAMMER TYPE PRL3A

277/480 VOLTS 3 PHASE 4 WIRE
250 AMP MAIN CIRCUIT BREAKER

CKT NO.	DESIGNATION	CIRCUIT WIRE	CIRCUIT GND	CIRCUIT COND	CIRCUIT BREAKER POLE	CIRCUIT BREAKER TRIP	KVA	KVA	CIRCUIT BREAKER TRIP	CIRCUIT BREAKER POLE	CIRCUIT COND	CIRCUIT GND	CIRCUIT WIRE	DESIGNATION	CKT NO.
1															2
3	CHILLER CH–1	2/0	6	2	3	175	103.7	9.2	20	3	3/4	10	10	AHU–114 RM 2B–264A	4
5															6
7															8
9	PUMP–1	12	12	3/4	3	15	4.0	35.0	70	3	1 1/4	8	4	PANEL 2BNP1	10
11														TRANSFORMER	12
13															14
15	PUMP–2	12	12	3/4	3	15	4.0	1.6	20	1				SPARE	16
17									20	1				SPARE	18
19	VAV'S SP TREATMENT 2ND FLR	10	10	3/4	1	20	1.0		20	1				SPARE	20
21	LTG – 2ND FLR OFFICES	10	10	3/4	1	20	1.8		20	1				SPARE	22
23	LTG – 2ND FLR OFFICES	10	10	3/4	1	20	1.4		20	1				SPARE	24
25	LTG – 2ND FLR WORK AREA	10	10	3/4	1	20	1.8		20	1				SPARE	26
27	EWH – RR 2B–277/278	10	10	3/4	3	20	3.0		20	1				SPARE	28
29	EWH – RR 2B–264A	10	10	3/4	3	20	1.5		20	1				SPARE	30
31	SPACE						0.5							SPACE	32
33	SPACE						0.5							SPACE	34
35	SPACE						0.5							SPACE	36
37	SPACE						0.5							SPACE	38
39	SPACE						0.5							SPACE	40
41	SPACE						0.5							SPACE	42
	TOTAL KVA 171.0							18,000 AMP. RMS. SYMMETRICAL SHORT CIRCUIT CURRENT RATING							

PANEL 2B2–XLS–L1

SURFACE MTD. CIRCUIT BREAKER TYPE
CUTLER HAMMER TYPE PRL3A

277/480 VOLTS 3 PHASE 4 WIRE
60 AMP MAIN CIRCUIT BREAKER

CKT NO.	DESIGNATION	CIRCUIT WIRE	CIRCUIT GND	CIRCUIT COND	CIRCUIT BREAKER POLE	CIRCUIT BREAKER TRIP	KVA	KVA	CIRCUIT BREAKER TRIP	CIRCUIT BREAKER POLE	CIRCUIT COND	CIRCUIT GND	CIRCUIT WIRE	DESIGNATION	CKT NO.
1	SPARE				1	20	0.5	0.7	20	1	3/4	12	12	EGRESS LTG – SECOND FLR	2
3	SPARE				1	20	0.8	0.5	20	1				SPARE	4
5	SPARE				1	20	0.5	0.5	20	1				SPARE	6
7	SPARE				1	20	0.5	0.5	20	1				SPARE	8
9	SPARE				1	20	0.5	0.5	20	1				SPARE	10
11	SPARE				1	20	0.5	0.5	20	1				SPARE	12
13	SPACE													SPACE	14
15	SPACE													SPACE	16
17	SPACE													SPACE	18
19	SPACE													SPACE	20
	TOTAL KVA 7.0							35,000 AMP. RMS. SYMMETRICAL SHORT CIRCUIT CURRENT RATING							

PANEL 2B2–XCR–L1

SURFACE MTD. CIRCUIT BREAKER TYPE
CUTLER HAMMER TYPE PRL3A

277/480 VOLTS 3 PHASE 4 WIRE
60 AMP MAIN CIRCUIT BREAKER

CKT NO.	DESIGNATION	CIRCUIT WIRE	CIRCUIT GND	CIRCUIT COND	CIRCUIT BREAKER POLE	CIRCUIT BREAKER TRIP	KVA	KVA	CIRCUIT BREAKER TRIP	CIRCUIT BREAKER POLE	CIRCUIT COND	CIRCUIT GND	CIRCUIT WIRE	DESIGNATION	CKT NO.
1	EM LTG – SECOND FLOOR	12	12	3/4	1	20	0.2							SPACE	2
3	SPARE				1	20	0.5							SPACE	4
5	SPARE				1	20	0.5							SPACE	6
7	SPARE				1	20	0.5							SPACE	8
9	SPARE				1	20	0.5							SPACE	10
11	SPARE				1	20	0.5							SPACE	12
13	SPARE				1	20	0.5							SPACE	14
15	SPARE				1	20	0.8							SPACE	16
17	SPARE				1	20	1.0							SPACE	18
19	SPACE													SPACE	20
	TOTAL KVA 5.0							10,000 AMP. RMS. SYMMETRICAL SHORT CIRCUIT CURRENT RATING							

PANEL 2B–N–P1

SURFACE MTD. CIRCUIT BREAKER TYPE
CUTLET HAMMER TYPE PRL1A

120/208 VOLTS 3 PHASE 4 WIRE
150 AMP MAIN CIRCUIT BREAKER

CKT NO.	DESIGNATION	CIRCUIT WIRE	CIRCUIT GND	CIRCUIT COND	CIRCUIT BREAKER POLE	CIRCUIT BREAKER TRIP	KVA	KVA	CIRCUIT BREAKER TRIP	CIRCUIT BREAKER POLE	CIRCUIT COND	CIRCUIT GND	CIRCUIT WIRE	DESIGNATION	CKT NO.
1	REC – MECH/ELEC	12	12	3/4	1	20	0.6	1.0	20	2	3/4	12	12	REC – WORK AREA FURN.	2
3	REC – COUNSELING	12	12	3/4	2	20	1.2	1.0				12	12	REC – WORK AREA FURN.	4
5	REC – COUNSELING	12					1.0	1.0	20	2	3/4	12	12	REC – WORK AREA FURN.	6
7	REC – WAITING RM	12	12	3/4	1	20	1.2	1.0				12	12	REC – WORK AREA FURN.	8
9	REC – OFFICE 2B–277	10					1.0	1.0	20	2	3/4	12	12	REC – WORK AREA FURN.	10
11	REC – OFFICE 2B–276	10	10	3/4	3	20	1.0	1.0				12	12	REC – WORK AREA FURN.	12
13	REC – 2B–274	10					1.0	1.0	20	2	3/4	12	12	REC – WORK AREA FURN.	14
15	REC – WORK AREA	10	10	3/4	1	20	0.6	1.0				12	12	REC – WORK AREA FURN.	16
17	REC – WORK AREA	12	12	3/4	1	20	0.6	1.0	20	2	3/4	12	12	REC – WORK AREA FURN.	18
19	REC – RESTROOMS	10	10	3/4	1	20	1.0	1.0				12	12	REC – WORK AREA FURN.	20
21	REC – WATER COOLERS	10	10	3/4	1	20	1.0	1.0	20	1	3/4	12	12	REC – RR 2B–264A	22
23	REC – OFFICE 2B–267/268	10	10	3/4	1	20	1.5	1.0	20	1	3/4	12	12	REC – TEL/DATA ROOM	24
25	REC – OFFICE 2B–269/270	12	12	3/4	1	20	1.5	1.0	20	1		12	12	REC – TEL/DATA ROOM	26
27	REC – 2B–271/272	10	10	3/4	1	20	1.5	1.0	20	1	3/4	12	12	REC – TEL/DATA ROOM	28
29	REC – CONFERENCE RM	10	10	3/4	1	20	1.5	0.5	20	1	3/4	12	12	REC – ROOF	30
31	REC – CONFERENCE RM	10	10	3/4	1	20	1.3	0.5	20	1	3/4	12	12	REC – EMCS PANEL	32
33	SPARE				1	20	0.5		20	1				SPARE	34
35	SPARE				1	20	0.5		20	1				SPARE	36
37	SPARE				1	20	0.5								38
39	SPARE				1	20	0.5		30	3	3/4	8	8	SURGE PROTECTOR	40
41	SPARE				1	20	0.5								42
	TOTAL KVA 35.0							10,000 AMP. RMS. SYMMETRICAL SHORT CIRCUIT CURRENT RATING							

PANEL 2B2–XLS–P1

SURFACE MTD. CIRCUIT BREAKER TYPE
CUTLER HAMMER TYPE PRL1A

120/208 VOLTS 3 PHASE 4 WIRE
60 AMP MAIN CIRCUIT BREAKER

CKT NO.	DESIGNATION	CIRCUIT WIRE	CIRCUIT GND	CIRCUIT COND	CIRCUIT BREAKER POLE	CIRCUIT BREAKER TRIP	KVA	KVA	CIRCUIT BREAKER TRIP	CIRCUIT BREAKER POLE	CIRCUIT COND	CIRCUIT GND	CIRCUIT WIRE	DESIGNATION	CKT NO.
1	PAGING AMPLIFIER	12	12	3/4	1	20	1.0	0.5	20	1				SPARE	2
3	SPARE				1	20	0.5	0.5	20	1				SPARE	4
5	SPARE				1	20	0.5	0.5	20	1				SPARE	6
7	SPARE				1	20	0.5	0.5	20	1				SPARE	8
9	SPARE				1	20	0.5	0.5	20	1				SPARE	10
11	SPARE				1	20	0.5	0.5	20	1				SPARE	12
13	SPACE													SPACE	14
15	SPACE													SPACE	16
17	SPACE													SPACE	18
19	SPACE													SPACE	20
	TOTAL KVA 7.0							10,000 AMP. RMS. SYMMETRICAL SHORT CIRCUIT CURRENT RATING							

SURFACE MTD. ^
CUTLER HAMMER TYPE PRL1A

120/208 VOLTS 3 PHASE 4 WIRE

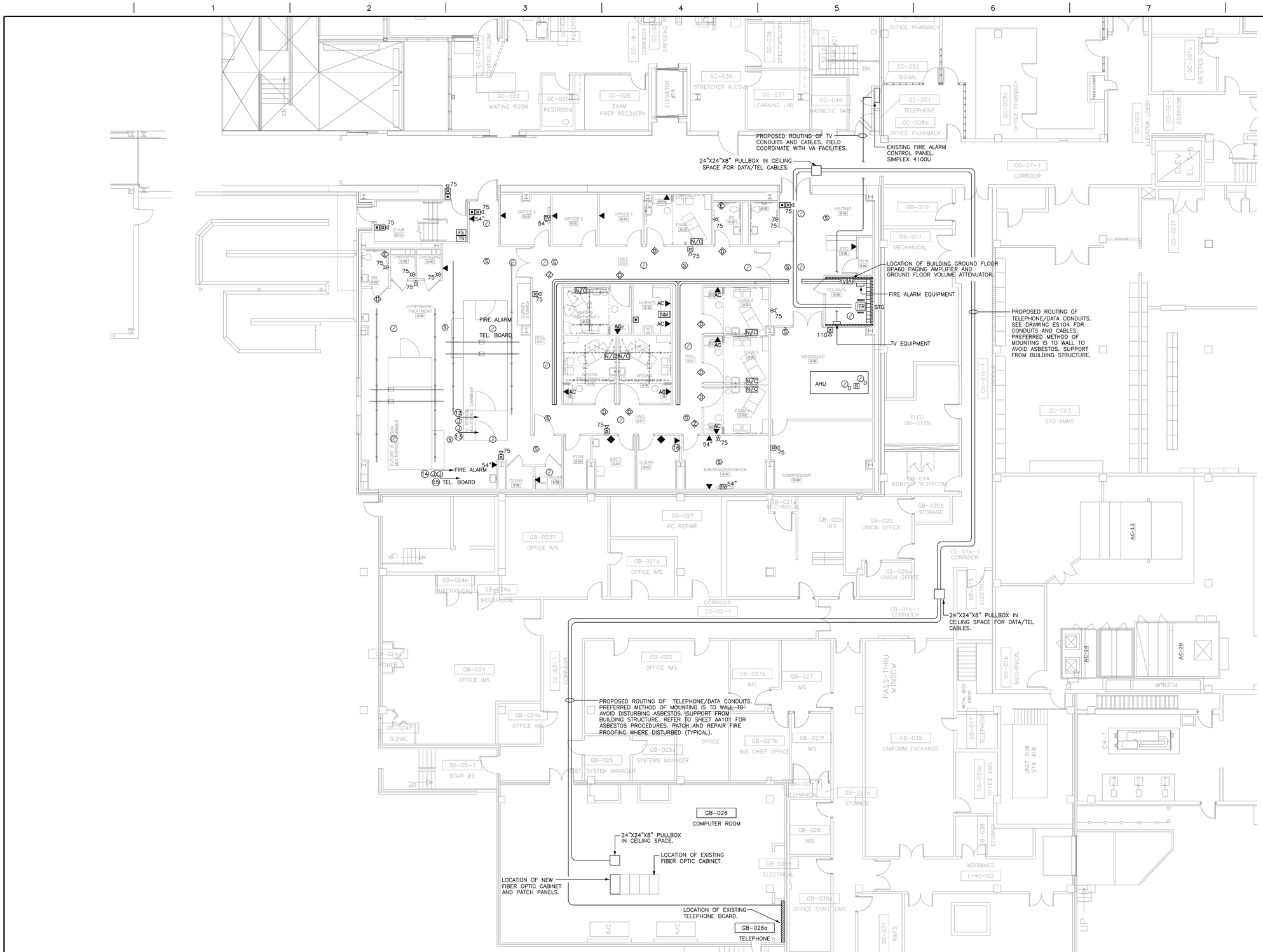

GROUND FLOOR ELECTRICAL PLAN - SYSTEMS

SCALE: 3/16" = 1'-0"

NOTES:

12. PROVIDE 1" CONDUIT WITH PULL STRING FROM JUNCTION BOX LOCATED IN CEILING SPACE TO TEL/DATA ROOM GB-040D FOR FIRE ALARM CABLES. COORDINATE WITH HYPERBARIC EQUIPMENT PROVIDER FOR EXACT REQUIREMENTS AND CONNECTIONS INCLUDING QUANTITIES AND TYPES OF CABLES.
13. PROVIDE 2" CONDUIT WITH PULL STRING FROM JUNCTION BOX LOCATED IN CEILING SPACE TO TEL/DATA ROOM GB-040D FOR TEL/DATA CABLES. COORDINATE WITH HYPERBARIC EQUIPMENT PROVIDER FOR EXACT REQUIREMENTS AND CONNECTIONS INCLUDING QUANTITIES AND TYPES OF CABLES.
14. PROVIDE 1" CONDUIT WITH PULL STRING FROM JUNCTION BOX LOCATED IN CEILING SPACE TO TEL/DATA ROOM GB-040D FOR FIRE ALARM CABLES. COORDINATE WITH HYPERBARIC EQUIPMENT PROVIDER FOR EXACT REQUIREMENTS AND CONNECTIONS INCLUDING QUANTITIES AND TYPES OF CABLES FOR FUTURE EQUIPMENT.
15. PROVIDE 2" CONDUIT WITH PULL STRING FROM JUNCTION BOX LOCATED IN CEILING SPACE TO TEL/DATA ROOM GB-040D FOR TEL/DATA CABLES. COORDINATE WITH HYPERBARIC EQUIPMENT PROVIDER FOR EXACT REQUIREMENTS AND CONNECTIONS INCLUDING QUANTITIES AND TYPES OF CABLES FOR FUTURE EQUIPMENT.
16. FIELD VERIFY MOUNTING HEIGHT WITH ARCHITECT PRIOR TO ROUGH IN.

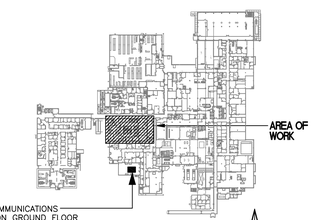

KEY PLAN
NOT TO SCALE

04-18-12 MEDICAL EQUIPMENT AND INTERIOR DESIGN REVISIONS

REVISION	DATE
65% SUBMITTAL	02/19/11
95% SUBMITTAL	03/29/11
100% SUBMITTAL	04/13/11
CONSTRUCTION SET	05/02/11
MEDICAL EQUIPMENT AND INTERIOR DESIGN REVISIONS	04/18/12

CONSULTANTS:

HADDAD ENGINEERING, INC.
2955 HARTLEY ROAD, SUITE 205 JACKSONVILLE, FL. 32257
TELEPHONE - (904) 262-5066 FAX - (904) 262-7139
CERTIFICATE OF AUTHORIZATION NO. 4000

NAMIR A. HADDAD P.E.
LICENSE NO. 31987

ARCHITECT/ENGINEERS:

ttv architects, inc.
110 EAST FORSYTH ST
JACKSONVILLE, FLORIDA 32202
T 904.798.8333
F 904.798.8335
www.ttvarch.com
FL Lic#AA0002009

Drawing Title: GROUND FLOOR ELECTRICAL PLAN - SYSTEMS

Approved: Project Director

Project Title: SPECIALTY TREATMENT EXPANSION PROJECT- BUILDING #1

Location: JAMES A. HALEY VETERANS' HOSPITAL

Date: 02/19/11 | Checked: NH | Drawn: WH

Project Number: 673-CSI-100

Building Number: 1

Drawing Number: ES100

Dwg. 015 of 020

Office of Construction and Facilities Management

Department of Veterans Affairs

VA FORM 08-6231

FIRST FLOOR ELECTRICAL PLAN - SYSTEMS

SCALE: 3/16" = 1'-0"

NOTES:

(5) CODE BLUE STATION, NURSE CALL, DOMELIGHTS. PROVIDE 3/4" CONDUIT TO CEILING SPACE. PROVIDE CAT 6 CABLE FROM OUTLET BOX TO TELEPHONE CLOSET TO BE ASSIGNED BY THE VA TECHNOLOGY DEPARTMENT. CODE BLUE STATION TO BE SUPPLIED BY OWNER AND INSTALLED BY CONTRACTOR. COORDINATE WITH OWNER AND EQUIPMENT SUPPLIER. SUPPORT CABLES AT INTERVALS NOT TO EXCEED 24". (TYPICAL).

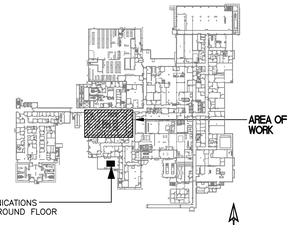

KEY PLAN

NOT TO SCALE

04-18-12 MEDICAL EQUIPMENT AND INTERIOR DESIGN REVISIONS

REVISION	DATE
65% SUBMITTAL	02/19/11
95% SUBMITTAL	03/29/11
100% SUBMITTAL	04/13/11
CONSTRUCTION SET	05/02/11
MEDICAL EQUIPMENT AND INTERIOR DESIGN REVISIONS	04/18/12

CONSULTANTS:

HADDAD ENGINEERING, INC.
2955 HARTLEY ROAD, SUITE 205 JACKSONVILLE, FL. 32257
TELEPHONE - (904) 262-5066 FAX - (904) 262-7139
CERTIFICATE OF AUTHORIZATION NO. 4000

NAMIR A. HADDAD P.E.
LICENSE NO. 31967

ARCHITECT/ENGINEERS:

ttv architects, inc.
115 EAST FORSYTH ST
JACKSONVILLE, FLORIDA 32202
T 904.798.8333
F 904.798.8335
www.ttvarch.com
FL Lic#AA0002609

Drawing Title: FIRST FLOOR ELECTRICAL PLAN - SYSTEMS

Approved: Project Director

Project Title: SPECIALTY TREATMENT EXPANS PROJECT- BUILDING #1

Location: JAMES A. HALEY VETERANS' HOSPITAL

Date	Checked	Drawn
02/19/11	NH	WH

Project Number 008: SI-100

Building Number: 1

Drawing Number: ES101

Dwg. 016 of 020

Office of Construction and Facilities Management

Department of Veterans Affairs

VA FORM 08-6231

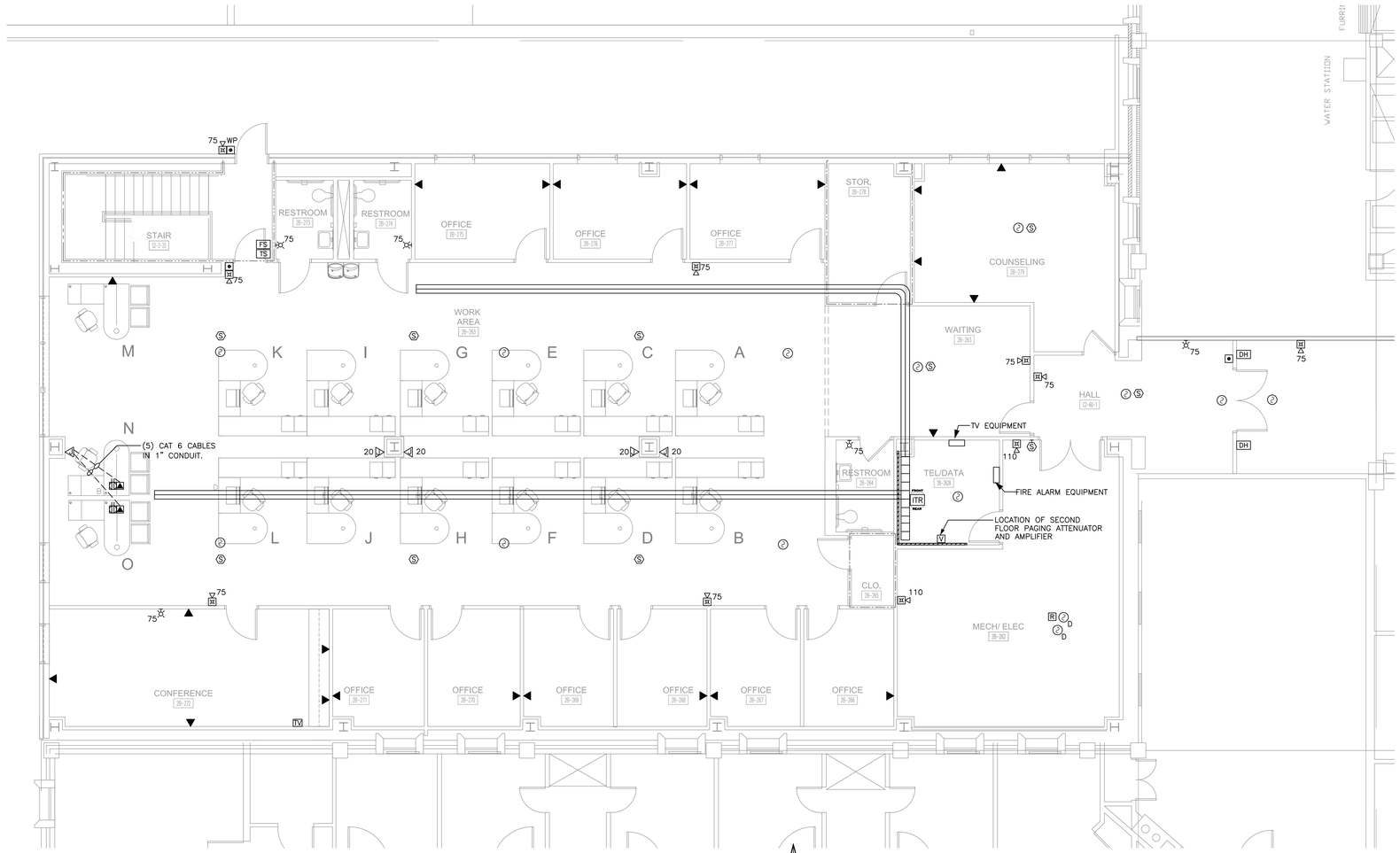

SECOND FLOOR ELECTRICAL PLAN - SYSTEMS

SCALE: 3/16" = 1'-0"

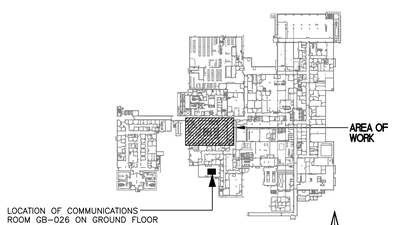

KEY PLAN

NOT TO SCALE

04-18-12 MEDICAL EQUIPMENT AND INTERIOR DESIGN REVISIONS

REVISION	DATE
65% SUBMITTAL	02/19/11
95% SUBMITTAL	03/29/11
100% SUBMITTAL	04/13/11
CONSTRUCTION SET	05/02/11
MEDICAL EQUIPMENT AND INTERIOR DESIGN REVISIONS	04/18/12

CONSULTANTS:

HADDAD ENGINEERING, INC.
2955 HARTLEY ROAD, SUITE 205 JACKSONVILLE, FL. 32257
TELEPHONE - (904) 262-5066 FAX - (904) 262-7139
CERTIFICATE OF AUTHORIZATION NO. 4000

NAMIR A. HADDAD P.E.
LICENSE NO. 31967

ARCHITECT/ENGINEERS:

ttv architects, inc.
110 EAST FORSYTH ST
JACKSONVILLE, FL 32202
T 904.798.8550
F 904.798.8535
www.ttvarch.com
FL Lic#AA0002609

Drawing Title: SECOND FLOOR ELECTRICAL PLAN - SYSTEMS

Approved: Project Director

Project Title: SPECIALTY TREATMENT EXPANSION PROJECT- BUILDING #1

Location: JAMES A. HALEY VETERANS' HOSPITAL

Date: 02/19/11 | Checked: NH | Drawn: WH

Project Number: 673-CSI-100

Building Number: 1

Drawing Number: ES102

Dwg. 017 of 020

Office of Construction and Facilities Management

Department of Veterans Affairs

VA FORM 08-6231

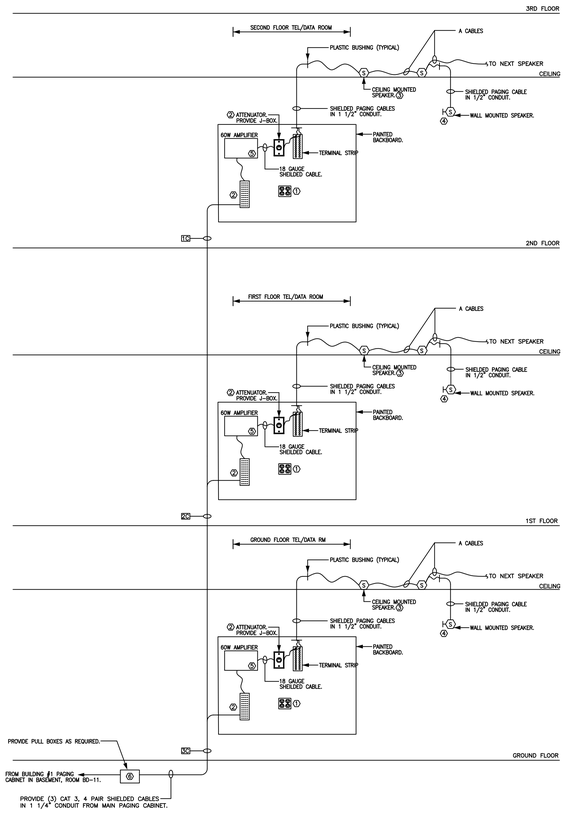

BUILDING #1 SPECIALTY TREATMENT WING - PAGING RISER DIAGRAM

NOT TO SCALE

PAGING NOTES:

1. PROVIDE 120V LIFE SAFETY POWER CIRCUIT.
2. PROVIDE WALL MOUNTED VOLUME ATTENUATOR AND TERMINAL STRIP. ATTENUATOR SHALL BE A 10 STEP (3dB PER STEP) ATTENUATOR RATED AT 100 WATTS. PROVIDE ATLAS AT100 ATTENUATOR AND SINGLE GANG J-BOX.
3. PROVIDE 2'x2' DROP-IN CEILING SPEAKER WITH BACK CAN. SEE FLOOR PLAN FOR QUANTITIES. SPEAKER SHALL BE 70V WITH 4 WATT MULTI-TAP TRANSFORMER. UTILIZE 1 WATT TAP POSITION. SPEAKER SHALL BE 8" WITH FINELY PERFORATED GRILL OVER ENTIRE SPEAKER. PROVIDE BOGEN MODEL #CSD2X2U.
4. PROVIDE WALL MOUNTED SPEAKER. SEE FLOOR PLAN FOR QUANTITIES. SPEAKER SHALL BE 70V WITH 4 WATT MULTI-TAP TRANSFORMER. UTILIZE 1 WATT TAP POSITION. PROVIDE BOGEN MODEL #WB8TSL.
5. PROVIDE WALL MOUNTED PAGING AMPLIFIER RATED AT WATTAGE SHOWN ON RISER DIAGRAM. AMPLIFIER SHALL HAVE INPUT FOR 600 OHM BALANCED TELEPHONE LINE AND CONTAIN THERMAL AND ELECTRONIC OVERLOAD PROTECTION.
6. 24"W X 24"L X 8"D PULL BOX NEMA-1. LABEL DATA/VOICE/TV. QUANTITY AS REQUIRED. NO MORE THAN (3) CHANGES OF DIRECTIONS PER PULL BOX. THE MAXIMUM DISTANCE BETWEEN PULL BOXES IS 200 FEET.
7. CABLES SHALL BE PLENUM RATED. SUPPORT FROM BUILDING STRUCTURE AT INTERVALS NOT TO EXCEED 24".

CABLE SCHEDULE:

(1) CAT 3, 4 PAIR CABLE IN 1" CONDUIT.
(2) CAT 3, 4 PAIR CABLES IN 1" CONDUIT.
(3) CAT 3, 4 PAIR CABLES IN 1" CONDUIT.

A CABLE = SHIELDED CABLE, FLUORESCENT PINK. SUPPORT FROM BUILDING STRUCTURE AT INTERVALS NOT TO EXCEED 24".

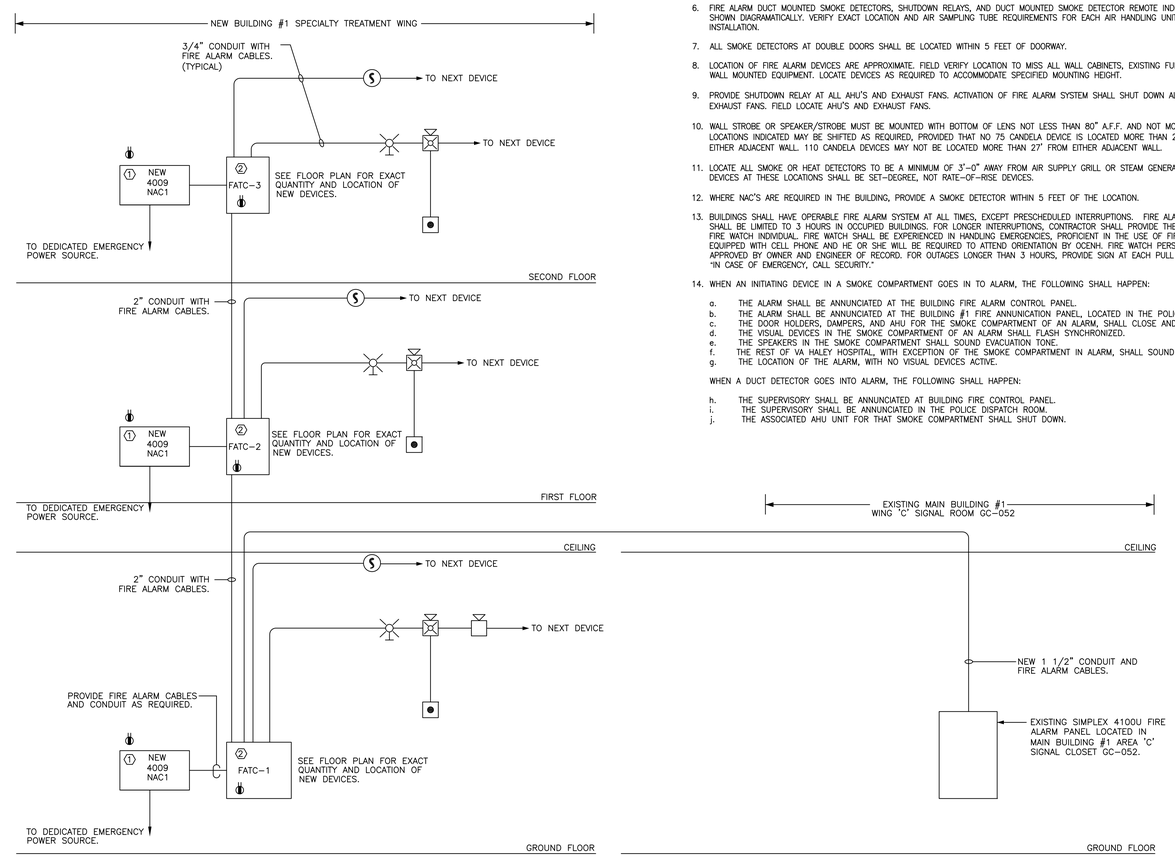

BUILDING #1 SPECIALTY TREATMENT WING - FIRE RISER DIAGRAM

NOT TO SCALE.

NOTE:

1. PROVIDE NAC PANELS AND NAC EXTENDER CARDS AS REQUIRED TO POWER NEW DEVICES SHOWN ON FLOOR PLAN. ALL SPEAKER AND STROBE CIRCUITS SHALL SERVE ONLY ONE SMOKE COMPARTMENT. TWO SMOKE COMPARTMENTS SHALL NOT SHARE THE SAME SPEAKER AND/OR STROBE CIRCUIT. PROVIDE LIFE SAFETY POWER AT LOCATION OF NAC PANELS. CONTRACTOR SHALL FIELD COORDINATE ALL NAC PANEL LOCATIONS WITH VA FACILITIES PRIOR TO INSTALLATION.
2. FIRE ALARM TERMINAL BOX. 24" X 24" X 8" DEEP NEMA-1 BOX, HINGED DOOR HOFFMAN #A24N248LP.
3. MODIFY FIRE ALARM PANEL TO ACCEPT NEW DEVICES. CERTIFY FIRE ALARM PANEL AT COMPLETION OF WORK. PROVIDE NEW FIRE ALARM PANEL NETWORKED TO EXISTING IF NEW DEVICE COUNT EXCEEDS THE CAPACITY OF EXISTING FIRE ALARM PANEL.

FIRE ALARM NOTES:

1. PROVIDE LABELS FOR ALL FIRE ALARM DEVICES. CONTRACTOR SHALL INSTALL THESE LABELS (ONE LABEL FOR EACH FIRE ALARM DEVICE). COORDINATE LABELING FORMAT WITH MANUFACTURER AND OWNER.
2. AT COMPLETION OF FIRE ALARM SYSTEM PROGRAMMING, PROVIDE (3) COPIES OF PROGRAM PRINT OUT. INCLUDE PRINT OUT AS PART OF OPERATION AND MAINTENANCE MANUAL.
3. QUANTITY OF FIRE ALARM DEVICES ON ONE DATA LOOP SHALL NOT EXCEED 70% OF CAPACITY.
4. ALL FIRE ALARM WIRING SHALL BE COLOR CODED IN ACCORDANCE TO THE FOLLOWING TABLE:

FIRE ALARM WIRING COLOR CODE: FUNCTION:	COLOR
ZONE	YELLOW-BLUE
DATA	218-18-1-1STP 1 PR TWISTED SHIELDED CABLE
24vdc POWER	RED-BLACK
SPEAKER-STROBE	WHITE-PURPLE
DOOR HOLDER	PINK-GRAY
A/C SHUT DOWN	ORANGE-BROWN
ELEVATOR SHUTDOWN	VIOLET-VIOLET
CABLE JACKET (WHERE APPLICABLE)	RED

5. PROVIDE SURGE PROTECTION FOR ALL FIRE ALARM CABLES LEAVING OR ENTERING A BUILDING. ALL EXTERIOR DEVICE'S CABLES SHALL BE PROTECTED BY SURGE SUPRESSORS.
6. FIRE ALARM DUCT MOUNTED SMOKE DETECTORS, SHUTDOWN RELAYS, AND DUCT MOUNTED SMOKE DETECTOR REMOTE INDICATORS ARE SHOWN DIAGRAMATICALLY. VERIFY EXACT LOCATION AND AIR SAMPLING TUBE REQUIREMENTS FOR EACH AIR HANDLING UNIT PRIOR TO INSTALLATION.
7. ALL SMOKE DETECTORS AT DOUBLE DOORS SHALL BE LOCATED WITHIN 5 FEET OF DOORWAY.
8. LOCATION OF FIRE ALARM DEVICES ARE APPROXIMATE. FIELD VERIFY LOCATION TO MISS ALL WALL CABINETS, EXISTING FURNISHINGS, AND WALL MOUNTED EQUIPMENT. LOCATE DEVICES AS REQUIRED TO ACCOMMODATE SPECIFIED MOUNTING HEIGHT.
9. PROVIDE SHUTDOWN RELAY AT ALL AHU'S AND EXHAUST FANS. ACTIVATION OF FIRE ALARM SYSTEM SHALL SHUT DOWN ALL AHU'S AND EXHAUST FANS. FIELD LOCATE AHU'S AND EXHAUST FANS.
10. WALL STROBE OR SPEAKER/STROBE MUST BE MOUNTED WITH BOTTOM OF LENS NOT LESS THAN 80" A.F.F. AND NOT MORE THAN 96" A.F.F. LOCATIONS INDICATED MAY BE SHIFTED AS REQUIRED, PROVIDED THAT NO 75 CANDELA DEVICE IS LOCATED MORE THAN 22'-6" FROM EITHER ADJACENT WALL. 110 CANDELA DEVICES MAY NOT BE LOCATED MORE THAN 27' FROM EITHER ADJACENT WALL.
11. LOCATE ALL SMOKE OR HEAT DETECTORS TO BE A MINIMUM OF 3'-0" AWAY FROM AIR SUPPLY GRILL OR STEAM GENERATING EQUIPMENT. DEVICES AT THESE LOCATIONS SHALL BE SET-DEGREE, NOT RATE-OF-RISE DEVICES.
12. WHERE NAC'S ARE REQUIRED IN THE BUILDING, PROVIDE A SMOKE DETECTOR WITHIN 5 FEET OF THE LOCATION.
13. BUILDINGS SHALL HAVE OPERABLE FIRE ALARM SYSTEM AT ALL TIMES, EXCEPT PRESCHEDULED INTERRUPTIONS. FIRE ALARM INTERRUPTIONS SHALL BE LIMITED TO 3 HOURS IN OCCUPIED BUILDINGS. FOR LONGER INTERRUPTIONS, CONTRACTOR SHALL PROVIDE THE SERVICES OF A FIRE WATCH INDIVIDUAL. FIRE WATCH SHALL BE EXPERIENCED IN HANDLING EMERGENCIES, PROFICIENT IN THE USE OF FIRE EXTINGUISHERS, EQUIPPED WITH CELL PHONE AND HE OR SHE WILL BE REQUIRED TO ATTEND ORIENTATION BY OCENH. FIRE WATCH PERSONNEL MUST BE APPROVED BY OWNER AND ENGINEER OF RECORD. FOR OUTAGES LONGER THAN 3 HOURS, PROVIDE SIGN AT EACH PULL STATION TO READ "IN CASE OF EMERGENCY, CALL SECURITY."
14. WHEN AN INITIATING DEVICE IN A SMOKE COMPARTMENT GOES IN TO ALARM, THE FOLLOWING SHALL HAPPEN:

a. THE ALARM SHALL BE ANNUNCIATED AT THE BUILDING FIRE ALARM CONTROL PANEL.
b. THE ALARM SHALL BE ANNUNCIATED AT THE BUILDING #1 FIRE ANNUNICATION PANEL, LOCATED IN THE POLICE DISPATCH ROOM.
c. THE DOOR HOLDERS, DAMPERS, AND AHU FOR THE SMOKE COMPARTMENT OF AN ALARM, SHALL CLOSE AND SHUT DOWN.
d. THE VISUAL DEVICES IN THE SMOKE COMPARTMENT OF AN ALARM SHALL FLASH SYNCHRONIZED.
e. THE SPEAKERS IN THE SMOKE COMPARTMENT SHALL SOUND EVACUATION TONE.
f. THE REST OF VA HALEY HOSPITAL, WITH EXCEPTION OF THE SMOKE COMPARTMENT IN ALARM, SHALL SOUND THE CODE FOR
g. THE LOCATION OF THE ALARM, WITH NO VISUAL DEVICES ACTIVE.

WHEN A DUCT DETECTOR GOES INTO ALARM, THE FOLLOWING SHALL HAPPEN:

h. THE SUPERVISORY SHALL BE ANNUNCIATED AT BUILDING FIRE CONTROL PANEL.
i. THE SUPERVISORY SHALL BE ANNUNCIATED IN THE POLICE DISPATCH ROOM.
j. THE ASSOCIATED AHU UNIT FOR THAT SMOKE COMPARTMENT SHALL SHUT DOWN.

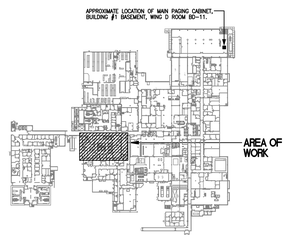

04-18-12 MEDICAL EQUIPMENT AND INTERIOR DESIGN REVISIONS

REVISION	DATE
65% SUBMITTAL	02/19/11
95% SUBMITTAL	03/29/11
100% SUBMITTAL	04/13/11
CONSTRUCTION SET	05/02/11
MEDICAL EQUIPMENT AND INTERIOR DESIGN REVISIONS	04/18/12

CONSULTANTS:

HADDAD ENGINEERING, INC.
2955 HARTLEY ROAD, SUITE 205 JACKSONVILLE, FL. 32257
TELEPHONE - (904) 262-5066 FAX - (904) 262-7139
CERTIFICATE OF AUTHORIZATION NO. 4000

NAMIR A. HADDAD P.E.
LICENSE NO. 31987

ARCHITECT/ENGINEERS:

ttv architects, inc.
110 EAST FORSYTH ST.
JACKSONVILLE, FLORIDA 32202
T 904.798.8333
F 904.798.8335
www.ttvarch.com
FL Lic#AA0002609

Drawing Title: SYSTEM RISER DIAGRAMS AND NOTES

Approved: Project Director

Project Title: SPECIALTY TREATMENT EXPANSION PROJECT- BUILDING #1

Location: JAMES A. HALEY VETERANS' HOSPITAL

Date: 02/19/11 | Checked: NH | Drawn: WH

Project Number: 673-CSI-100

Building Number: 1

Drawing Number: ES103

Dwg. 018 of 020

Office of Construction and Facilities Management

Department of Veterans Affairs

VA FORM 08-6231

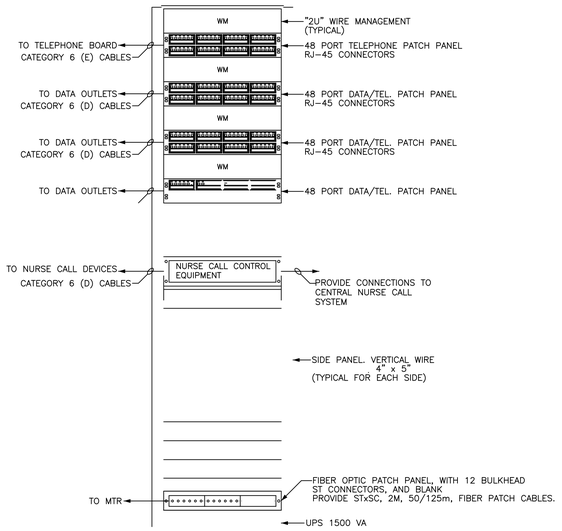

7' RACK, 19" UNIVERSAL, CLEAR COAT.

4" SQUARE CAST METAL BOX WITH DEDICATED 20 AMP, 120V. CIRCUIT WITH DOUBLE DUPLEX RECEPTACLES AND GALVANIZED STEEL COVER PLATE. ROUTE CONDUIT AND RECEPTACLES TO THE REAR OF EACH CABINET OR OUTER SIDE OF RACK.

NOT TO SCALE

INTERMEDIATE TELECOMMUNICATIONS RACK - ITR-1

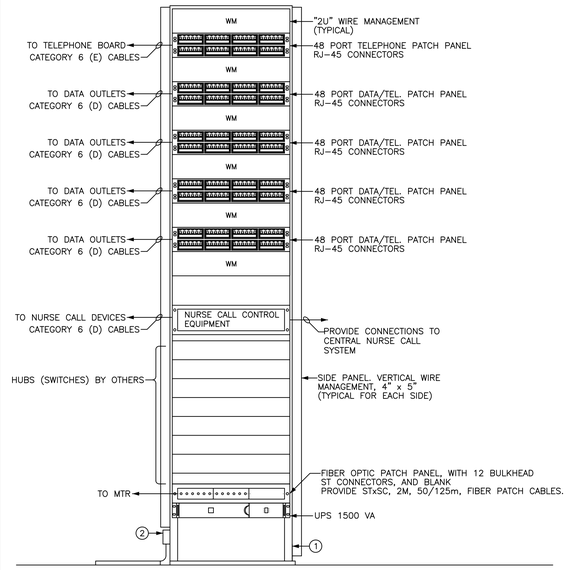

① 7' RACK. 19" UNIVERSAL, CLEAR COAT.

② 4" SQUARE CAST METAL BOX WITH DEDICATED 20 AMP, 120V. CIRCUIT WITH DOUBLE DUPLEX RECEPTACLES AND GALVANIZED STEEL COVER PLATE. LOCATE CONDUIT AND RECEPTACLES AT REAR OF CABINET OR OUTER SIDE OF RACK.

NOT TO SCALE

INTERMEDIATE TELECOMMUNICATIONS RACK - ITR-2

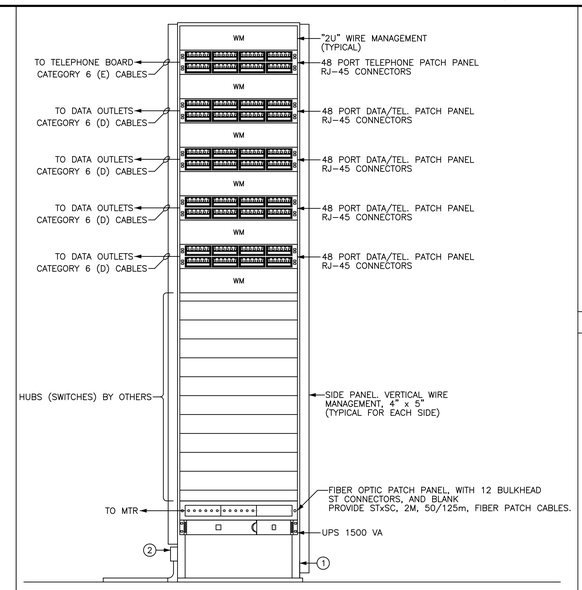

① 7' RACK. 19" UNIVERSAL, CLEAR COAT.

② 4" SQUARE CAST METAL BOX WITH DEDICATED 20 AMP, 120V. CIRCUIT WITH DOUBLE DUPLEX RECEPTACLES AND GALVANIZED STEEL COVER PLATE. LOCATE CONDUIT AND RECEPTACLES AT REAR OF CABINET OR OUTER SIDE OF RACK.

NOT TO SCALE

INTERMEDIATE TELECOMMUNICATIONS RACK - ITR-3

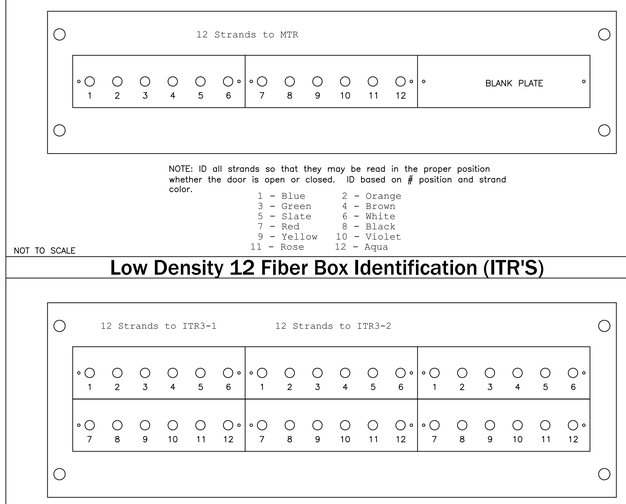

NOTE: ID all strands so that they may be read in the proper position whether the door is open or closed. ID based on # position and strand color.

1 - Blue 2 - Orange
3 - Green 4 - Brown
5 - Slate 6 - White
7 - Red 8 - Black
9 - Yellow 10 - Violet
11 - Rose 12 - Aqua

NOT TO SCALE

Low Density 12 Fiber Box Identification (ITR'S)

Color Code

1 – Blue 2 – Orange
3 – Green 4 – Brown
5 – Slate 6 – White
7 – Red 8 – Black
9 – Yellow 10 – Violet
11 – Rose 12 – Aqua

NOTE: ID all strands so that they may be read in the proper position whether the door is open or closed. ID based on # position and strand color.

NOTE: If more than 12 strands are taken to an area ID as #, Tube Color, Strand Color.

NOT TO SCALE

MEDIUM DENSITY FIBER BOX IDENTIFICATION(MTR)

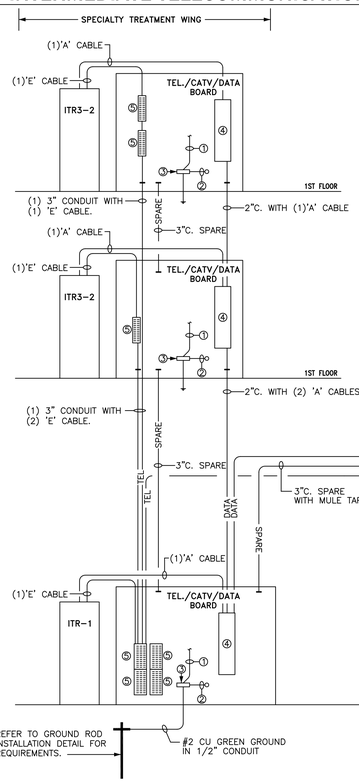

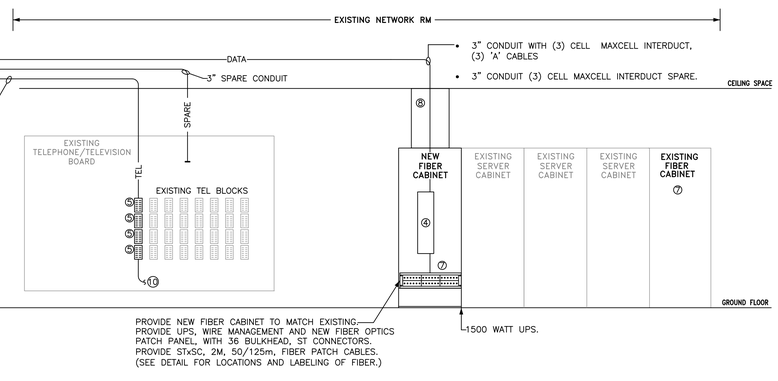

DATA/TELEPHONE SYSTEM RISER DIAGRAM

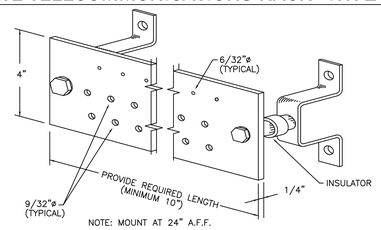

1. ALL CONNECTIONS SHALL USE THROUGH BOLT WITH COMPRESSION WASHER AND NUT OR BE EXOTHERMICLY WELDED.
2. LENGTH TO BE DETERMINED BY THE REQUIRED NUMBER OF CONNECTIONS. FIELD DETERMINE PRIOR TO INSTALLATION. COORDINATE WITH DOPS TECHNOLOGY AND ENGINEER OF RECORD.
3. ALL CONNECTIONS MUST BE MADE TO THE FRONT SIDE OF THE BAR.

NOT TO SCALE

TELECOMMUNICATION GROUND BUS BAR (MTGB/TGB)

NOTES:

① #6 GG TO TV BOARD AND ALL METAL CABINETS WITHIN ROOM

② #4 GG TO BUILDING'S MAIN PANELBOARD GROUNDING BUSBAR

③ COPPER BUSBAR WITH INSULATORS. LOCATE AT PLYWOOD. MAXIMUM OF 1 OHMS RESISTANCE.

④ LOCATION OF FIBER MAINTENANCE LOOPS (10' MINIMUM).

⑤ 50 PAIR TERMINAL BLOCK WITH SURGE PROTECTORS

⑥ 24"W X 24"L X 8"D PULL BOX NEMA–1. LABEL FIBER. QUANTITY AS REQUIRED. NO MORE THAN (3) CHANGES OF DIRECTIONS PER PULL BOX. THE MAXIMUM DISTANCE BETWEEN PULL BOXES IS 200 FEET.

⑦ PROVIDE REQUIRED QUANTITY OF PATCH CABLES TO TIE INTO EXISTING ELECTRONICS. CONTRACTOR SHALL FIELD DETERMINE EXACT LENGTHS REQUIRED AND COORDINATE WITH OWNER TO DETERMINE EXACT ROUTING. PROVIDE REQUIRED INTERDUCT, CONDUIT, SUPPORTS ETC.

⑧ PROVIDE 'WATERFALL' TO SUPPORT INTERDUCT FROM CEILING SPACE TO TOP OF CABINET. PROVIDE 24"X24" PULLBOX IN CEILING SPACE FOR MAINTENANCE LOOP. MAINTENANCE SHALL BE 10 FOOT MINIMUM.

⑨ PROVIDE MAINTENANCE LOOP.

⑩ CONNECT TO TELEPHONE LINES.

⑪ MINIMUM #2 G.G. TO TMGB.

CABLE SCHEDULE:

A. MULTIMODE FIBER OPTIC CABLE WITH (12) 50/125 MICRON FIBER CABLES (DATA)
C. CONDUIT
E. CATEGORY 5, 50–PAIR CABLE (VOICE)

LEGEND

PROVIDE THE FOLLOWING UNLESS NOTED OTHERWISE

——TEL—— = TELEPHONE CABLES IN CONDUIT
——TV—— = TV CABLES IN CONDUIT
——SPARE—— = SPARE CONDUIT WITH MULE TAPE
——DATA—— = DATA (FIBER OPTIC) CABLES IN CONDUIT

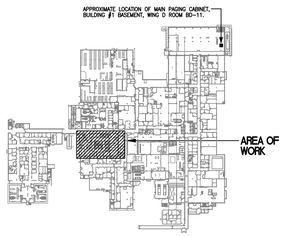

04-18-12 MEDICAL EQUIPMENT AND INTERIOR DESIGN REVISIONS

REVISION	DATE
65% SUBMITTAL	02/19/11
95% SUBMITTAL	03/29/11
100% SUBMITTAL	04/13/11
CONSTRUCTION SET	05/02/11
MEDICAL EQUIPMENT AND INTERIOR DESIGN REVISIONS	04/18/12

CONSULTANTS:

HADDAD ENGINEERING, INC.
2955 HARTLEY ROAD, SUITE 205 JACKSONVILLE, FL. 32257
TELEPHONE - (904) 262-5066 FAX - (904) 262-7139
CERTIFICATE OF AUTHORIZATION NO. 4000

NAMIR A. HADDAD P.E.
LICENSE NO. 31987

ARCHITECT/ENGINEERS:

ttv architects, inc.
110 EAST FORSYTH ST.
JACKSONVILLE, FLORIDA 32202
T 904.798.8333
F 904.798.8335
www.ttvarch.com
FL Lic#AA0002609

Drawing Title: TELECOMMUNICATION RISER DIAGRAMS, DETAILS AND NOTES

Approved: Project Director

Project Title: SPECIALTY TREATMENT EXPANSION PROJECT- BUILDING #1

Location: JAMES A. HALEY VETERANS' HOSPITAL

Date: 02/19/11 | Checked: NH | Drawn: WH

Project Number: 673-CSI-100

Building Number: 1

Drawing Number: ES104

Dwg. 019 of 020

Office of Construction and Facilities Management

Department of Veterans Affairs

VA FORM 08–6231

NOTES:

1. 24"W X 24"L X 8"D PULL BOX NEMA-1. LABEL DATA/VOICE/TV. QUANTITY AS REQUIRED. NO MORE THAN (3) CHANGES OF DIRECTIONS PER PULL BOX. THE MAXIMUM DISTANCE BETWEEN PULL BOXES IS 200 FEET.

CABLE SCHEDULE:

B. COAXIAL CABLE RG-11 COPPER SHIELD (TELEVISION/VIDEO)
C. CONDUIT
TV. COAXIAL CABLE RG-6 COPPER SHIELD (TELEVISION/VIDEO)

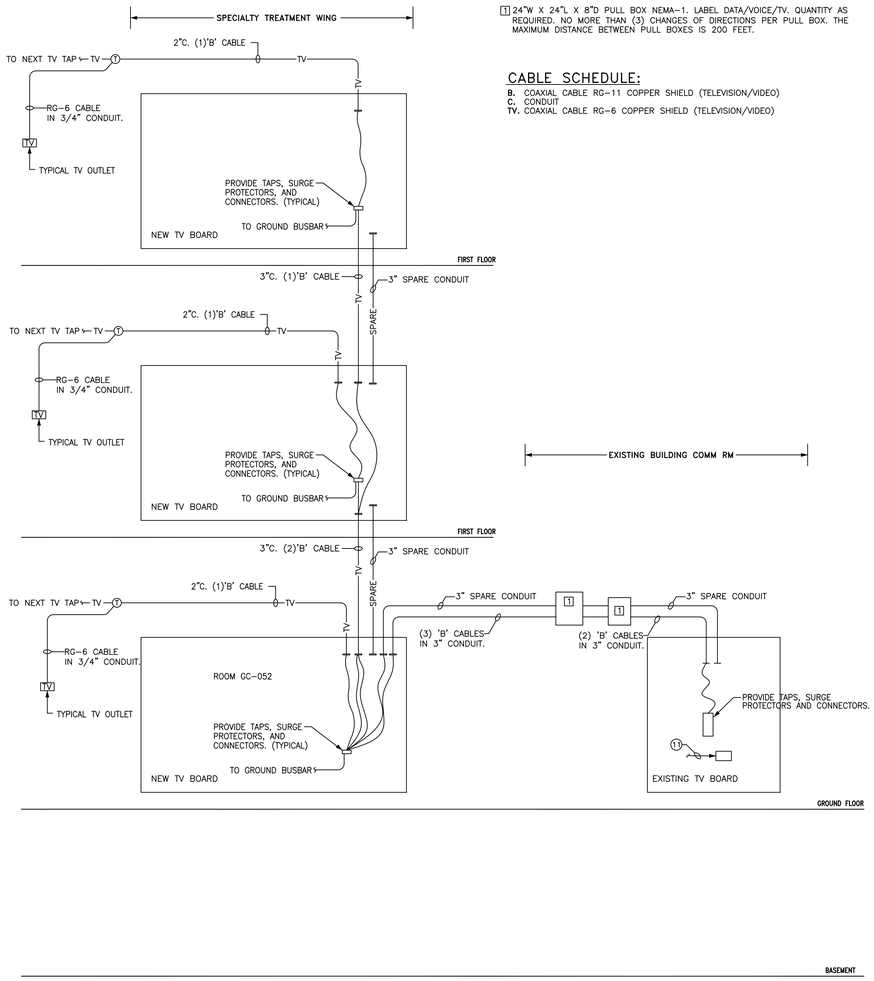

NOT TO SCALE

TV SYSTEM RISER DIAGRAM

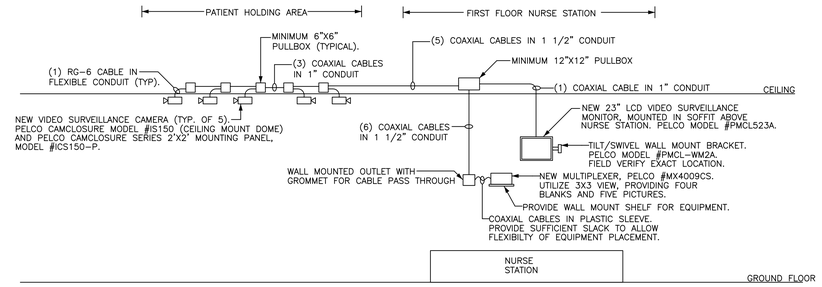

NOT TO SCALE

VIDEO SURVEILLANCE RISER DIAGRAM

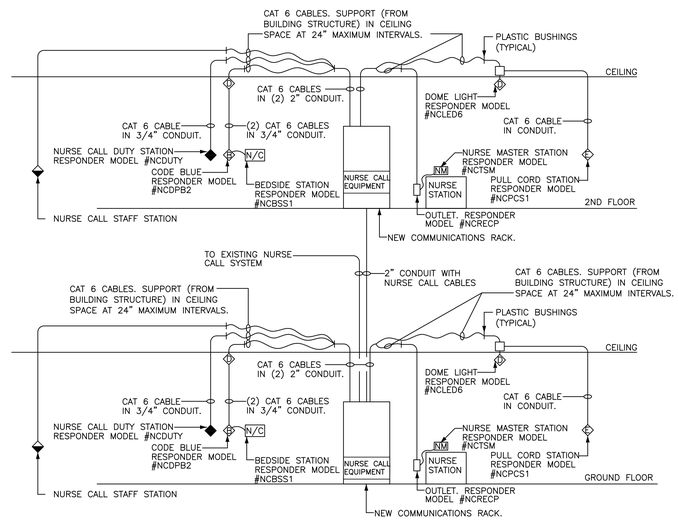

NOT TO SCALE

TYPICAL NURSE CALL RISER DIAGRAM

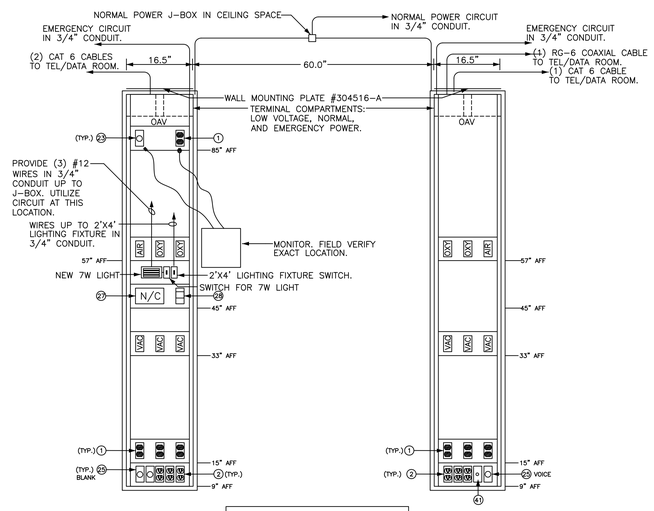

HEAD WALL LEGEND

ITEM	DESCRIPTION
OXY	OXYGEN OUTLET
AIR	AIR OUTLET
VAC	VACUUM OUTLET
(41)	TV OUTLET
(1)	EMERG. POWER, DUPLEX RECEPTACLE (1 GANG)
(2)	NORMAL POWER, DUPLEX RECEPTACLE (1 GANG)
(23)	MONITOR JACK, CAT 6, RJ-45 (1 GANG)
(25)	DATA JACK, CAT 6, RJ-45 (1 GANG)
(27)	PROVISION FOR NURSE CALL (3 GANG)
(29)	PROVISION FOR CODE BLUE (1 GANG)
(41)	TV OUTLET

NOT TO SCALE

AXIOM PATIENT CARE HEADWALL DIAGRAM

04-18-12 MEDICAL EQUIPMENT AND INTERIOR DESIGN REVISIONS

REVISION	DATE
65% SUBMITTAL	02/19/11
95% SUBMITTAL	03/29/11
100% SUBMITTAL	04/13/11
CONSTRUCTION SET	05/02/11
MEDICAL EQUIPMENT AND INTERIOR DESIGN REVISIONS	04/18/12

CONSULTANTS:

HADDAD ENGINEERING, INC.
2955 HARTLEY ROAD, SUITE 205 JACKSONVILLE, FL. 32257
TELEPHONE - (904) 262-5066 FAX - (904) 262-7139
CERTIFICATE OF AUTHORIZATION NO. 4000

NAMIR A. HADDAD P.E.
LICENSE NO. 31987

ARCHITECT/ENGINEERS:

ttv architects, inc.
110 EAST FORSYTH ST
JACKSONVILLE, FLORIDA 32202
T 904.798.8333
F 904.798.8335
www.ttvarch.com
FL Lic#AA0002009

Drawing Title: SYSTEM RISER DIAGRAMS, NOTES AND DETAILS

Approved: Project Director

Project Title: SPECIALTY TREATMENT EXPANSION PROJECT- BUILDING #1

Location: JAMES A. HALEY VETERANS' HOSPITAL

Date: 02/19/11 | Checked: NH | Drawn: WH

Project Number: 673-CSI-100

Building Number: 1

Drawing Number: ES105

Dwg. 020 of 020

Office of Construction and Facilities Management

Department of Veterans Affairs

VA FORM 08-6231