ELECTRICAL LEGEND

- HEAVY DUTY SAFETY SWITCH IN A NEMA I ENCLOSURE UNLESS OTHERWISE INDICATED. SIZE AS INDICATED.
- PANELBOARD. FLUSH MOUNTED.
- MOTOR.
- COMBINATION STARTER, WALL MOUNTED.
- MOTOR STARTER, SEE MECHANICAL DRAWINGS.
- CONCEALED BRANCH CIRCUIT WITH 2 #12 AND 1 #12 GROUND, 1/2"C. UNLESS OTHERWISE INDICATED.
- CONCEALED BRANCH CIRCUIT HOMERUN WITH 2 # 12 AND 1 #12 GROUND, 3/4"C. UNLESS OTHERWISE INDICATED.
- CONCEALED BRANCH CIRCUIT WITH 2 #12, 1 #12N. AND 1 #12 GROUND, 1/2"C. UNLESS OTHERWISE INDICATED.
- UNDERGROUND BRANCH CIRCUIT WITH 2 # 12 AND 1 #12 GROUND, 3/4"C. UNLESS OTHERWISE INDICATED.
- UNDERGROUND BRANCH CIRCUIT HOMERUN WITH 2 # 12 AND 1 #12 GROUND, 3/4"C. UNLESS OTHERWISE INDICATED.
- EXPOSED BRANCH CIRCUIT WITH 2 # 12 AND 1 #12 GROUND, 1/2"C. UNLESS OTHERWISE INDICATED.
- EXPOSED BRANCH CIRCUIT HOMERUN WITH 2 # 12 AND 1 #12 GROUND, 3/4"C. UNLESS OTHERWISE INDICATED.
- J — JUNCTION BOX. SIZE AS REQUIRED UNLESS OTHERWISE INDICATED.
- KJ — JUNCTION BOX WALL MOUNTED AS REQUIRED.
- $M — 20A/1P MOTOR SNAP SWITCH MOUNTED AT UNIT AS REQUIRED.
- 20A, 120V DUPLEX RECEPTACLE MOUNTED 4'–0" AFF. UNLESS OTHERWISE INDICATED.
- 20A, 120V DUPLEX RECEPTACLE MOUNTED 1'–6" AFF. UNLESS OTHERWISE INDICATED.
- FLEXIBLE EQUIPMENT CONNECTION
- W — TELEPHONE OUTLET MOUNTED 5'–0" AFF.
- C15 — EXISTING ACCESS CONTROL SYSTEM CONTROLLER.
- FOS-15 — EXISTING ACCESS CONTROL SYSTEM FIBER OPTIC SWITCH.
- EP — ACCESS CONTROL SYSTEM, ELECTRIFIED PANIC BAR SEE KEYED NOTE 14.
- PS — POWER SUPPLY WITH BATTERY BACKUP SIZED AND MOUNTED AS REQUIRED UNLESS OTHERWISE INDICATED. EQUAL TO ALTRONIX AL175ULX2.
- DC — ACCESS CONTROL SYSTEM, DOOR CONTACTS CONCEALED IN DOOR AND DOOR HEAD UNLESS OTHERWISE INDICATED. EQUAL TO GE SECURITY 1078C.
- DC OH — ACCESS CONTROL SYSTEM, DOOR CONTACTS FOR OVERHEAD DOOR MOUNTED AT FLOOR LEVEL. EQUAL TO SENTROL 2205.
- PR — ACCESS CONTROL SYSTEM, PROXIMITY READER IN SINGLE GANG RECESSED BOX WALL MOUNTED 4'–0" (122CM) AFF. EQUAL TO ASSA ABLOY RP40.
- IM — ACCESS CONTROL SYSTEM, INTERFACE MODULE IN A NEMA I ENCLOSURE MOUNTED ABOVE DOOR UNLESS OTHERWISE INDICATED. EQUAL TO LENEL LNL–1320.
- PT — ACCESS CONTROL SYSTEM, CONCEALED POWER TRANSFER UNIT. EQUAL TO PRECISION HARDWARE EPT–5. MODIFY FRAME AS REQUIRED.
- A — ACCESS CONTROL SYSTEM WIRING/CABLE IN EXPOSED CONDUIT. SIZE AS REQUIRED BY EQUIPMENT MANUFACTURER.
- A — ACCESS CONTROL SYSTEM WIRING/CABLE IN CONCEALED CONDUIT. SIZE AS REQUIRED BY EQUIPMENT MANUFACTURER.
- A — ACCESS CONTROL SYSTEM WIRING/CABLE HOMERUN IN CONCEALED CONDUIT. SIZE AS REQUIRED BY EQUIPMENT MANUFACTURER.
- FACP — EXISTING FIRE ALARM CONTROL PANEL.
- VISUAL DEVICE WALL MOUNTED 6'– 8" AFF. IN A RECESSED BOX, SIZED AS REQUIRED. DEVICE SHALL BE SIMPLEX TO MATCH EXISTING EQUIPMENT ON CAMPUS.
- AUDIO/VISUAL DEVICE WALL MOUNTED 6'– 8" AFF. IN A RECESSED BOX, SIZED AS REQUIRED. DEVICE SHALL BE SIMPLEX TO MATCH EXISTING EQUIPMENT ON CAMPUS.
- ADDRESSABLE PULL STATION DEVICE WALL MOUNTED 4'– 0" AFF. IN A RECESSED 2–GANG BOX WITH SINGLE GANG PLASTER RING. DEVICE SHALL BE SIMPLEX TO MATCH EXISTING EQUIPMENT ON CAMPUS.
- F — FIRE ALARM CONDUCTORS IN CONDUIT AS REQUIRED.
- FIRE SPRINKLER FLOW SWITCH.
- FIRE SPRINKLER TAMPER SWITCH.
- M — FIRE ALARM ADDRESSABLE MONITOR MODULE MOUNTED AS REQUIRED. DEVICE TO BE SIMPLEX TO MATCH EXISTING EQUIPMENT ON CAMPUS.
- FLUORESCENT LIGHTING FIXTURE. SEE FIXTURE SCHEDULE
- $ — 20A, 125V, TOGGLE SWITCH MOUNTED 4'–0" AFF.
- $3 — 20A, 125V, THREE–WAY SWITCH MOUNTED 4'–0" AFF.
- $4 — 20A, 125V, FOUR–WAY SWITCH MOUNTED 4'–0" AFF.
- $C — 20A, 125V MOMENTARY CONTACT SWITCH WITH CENTER POSITION OFF. MOUNTED 4'–6" AFF.
- WALL BRACKET LIGHT FIXTURE. SEE FIXTURE SCHEDULE.
- EXIT LIGHT. SEE FIXTURE SCHEDULE.
- EXISTING EQUIPMENT TO BE REMOVED COMPLETE UNLESS OTHERWISE INDICATED.

AFF — ABOVE FINISHED FLOOR.
ATS — AUTOMATIC TRANSFER SWITCH.
EUP — EXISTING UNDERGROUND PRIMARY TO BE REMOVED.
EX — EXISTING TO REMAIN UNLESS OTHERWISE INDICATED.
FACP — FIRE ALARM CONTROL PANEL.
GFI — GROUND FAULT CIRCUIT INTERRUPTER
WP — WEATHERPROOF. RECEPTACLES TO HAVE "IN–USE" COVER.

KEYED NOTES:

1. INTERFACE WITH NEW FLOW SWITCH AS REQUIRED FOR FIRE ALARM INITIATION AS INDICATED. VERIFY EXACT LOCATION.
2. INTERFACE WITH NEW TAMPER SWITCH AS REQUIRED FOR SUPERVISORY SIGNAL TO FIRE ALARM SYSTEM AS INDICATED. VERIFY EXACT LOCATION.
3. REMOVE EXISTING 225A FUSES IN EXISTING SAFETY SWITCH AND REPLACE WITH 250A FUSES (3 REQUIRED).
4. EXISTING 4 #250 KCMIL, 3"C. TO REMAIN.
5. REMOVE EXISTING FEEDER COMPLETE AND REPLACE WITH 4 #250 KCMIL & 1 #4 GND., 3"C. MAKE ALL TERMINATIONS AS REQUIRED.
6. INSTALL NEW 100A/3P CIRCUIT BREAKER IN EX. MP–15. EX MP–15 IS A 250A, MCB, 120/208V, 3ø 4W PANELBOARD MANUFACTURED BY ITE TYPE CDP.
7. REMOVE EXISTING WALL PACK LIGHT FIXTURE AND BUG ZAPPER COMPLETE. MODIFY EXISTING CIRCUITING AS REQUIRED.
8. EXPAND AND UPGRADE EXISTING FACP AS REQUIRED TO ADD NEW DEVICES AS INDICATED. FACP IS A SIMPLEX 4120.
9. INSTALL NEW 30A/3P, 208V, 3ø SAFETY SWITCH FOR FUTURE RELOCATION OF VEHICLE EXHAUST REMOVAL SYSTEM.
10. INSTALL NEW RECEPTACLE MOUNTED 12'–0" AFF. FOR FUTURE RELOCATION OF VEHICLE EXHAUST REMOVAL SYSTEM AIR COMPRESSOR.
11. RAISE EXISTING MANHOLE AS REQUIRED FOR NEW GRADE AS INDICATED ON CIVIL PLAN. PROVIDE NEW TRAFFIC RATED MANHOLE COVER.
12. STUB OUT FOUR 3/4" CONDUITS FROM LP–15 TO A POINT 14'–0" ABOVE FINISHED FLOOR FOR FUTURE.
13. UPGRADE, EXPAND, AND MODIFY EXISTING ACCESS CONTROL SYSTEM CONTROLLER AS REQUIRED TO INTERFACE NEW DEVICES AS INDICATED.
14. MOUNT LIGHTING FIXTURE TO BOTTOM CORD OF TRUSS. PROVIDE BLOCKING AS REQUIRED.
15. INSTALL COMPLETE ELECTRIFIED MORTISE TYPE PANIC HARDWARE WITH LATCHBOLT MONITORING . REQUEST TO EXIT, DOOR POSITION MONITORING SWITCH AND LEVER TYPE TRIM. LOCK SET SHALL MATCH EXISTING AND SHALL BE KEYED TO STATION MASTER KEYING SYSTEM AS DIRECTED BY COTR. HARDWARE SHALL BE EQUAL TO APEX E–LS–TS–2300–DS X M4908A.

GENERAL NOTES:

1. CONTRACTOR SHALL VISIT SITE PRIOR TO BIDDING TO DETERMINE EXISTING AS–BUILT CONDITIONS.
2. IF ANY EXISTING UTILITY IS DAMAGED DURING CONSTRUCTION, THE CONTRACTOR SHALL REPAIR IMMEDIATELY AT NO EXPENSE TO THE VA.
3. CONTRACTOR SHALL COORDINATE THIS WORK WITH STATION ENGINEERING DEPARTMENT. A MINIMUM OF FIVE DAYS WRITTEN NOTICE SHALL BE REQUIRED PRIOR TO ANY UTILITY SHUTDOWNS.
4. CONTRACTOR SHALL BE PROHIBITED FROM WORKING ON ENERGIZED ELECTRICAL SYSTEMS OR CONDUCTORS IN ACCORDANCE WITH VA POLICY.
5. NEW CIRCUIT BREAKERS ADDED TO EXISTING PANELBOARD SHALL MATCH EXISTING BREAKER TYPE AND RATINGS. EXISTING AND NEW PANELBOARDS SHALL HAVE SCHEDULES TYPED/RETYPED TO REFLECT CIRCUIT MODIFICATIONS.
6. NEW FIRE ALARM SYSTEM COMPONENTS SHALL BE PROVIDED BY SIMPLEX GRINNELL TO MATCH EXISTING COMPONENTS. CONTRACTOR SHALL HAVE ENTIRE FIRE ALARM SYSTEM RE–CERTIFIED FOR BUILDING 15 AFTER MODIFICATIONS ARE ACCOMPLISHED. ALL MODIFICATIONS AND RE–CERTIFICATIONS SHALL BE PERFORMED BY A SIMPLEX NICET LEVEL III TECHNICIAN. FIRE ALARM SYSTEM SHOP DRAWINGS SHALL BE SUBMITTED FOR APPROVAL.
7. ALL ACCESS CONTROL EQUIPMENT SHALL MATCH EXISTING EQUIPMENT UTILIZED ON CAMPUS PROVIDED AND INSTALLED BY STANLEY SECURITY SOLUTIONS. CONTACT PHILLIP BROOKER, TEL: (205) 531–7034. CONTRACTOR SHALL BE RESPONSIBLE FOR INTERFACE WITH EXISTING EQUIPMENT, PROGRAMMING, AND CERTIFICATION AS REQUIRED FOR A COMPLETE OPERATIONAL EXTENSION OF EXISTING ACCESS CONTROL SYSTEM. DATA SUBMITTALS AND SHOP DRAWINGS SHALL BE SUBMITTED FOR APPROVAL PRIOR TO START OF WORK.
8. ALL FIRE ALARM AND ACCESS CONTROL WIRING SHALL BE INSTALLED IN CONDUIT.

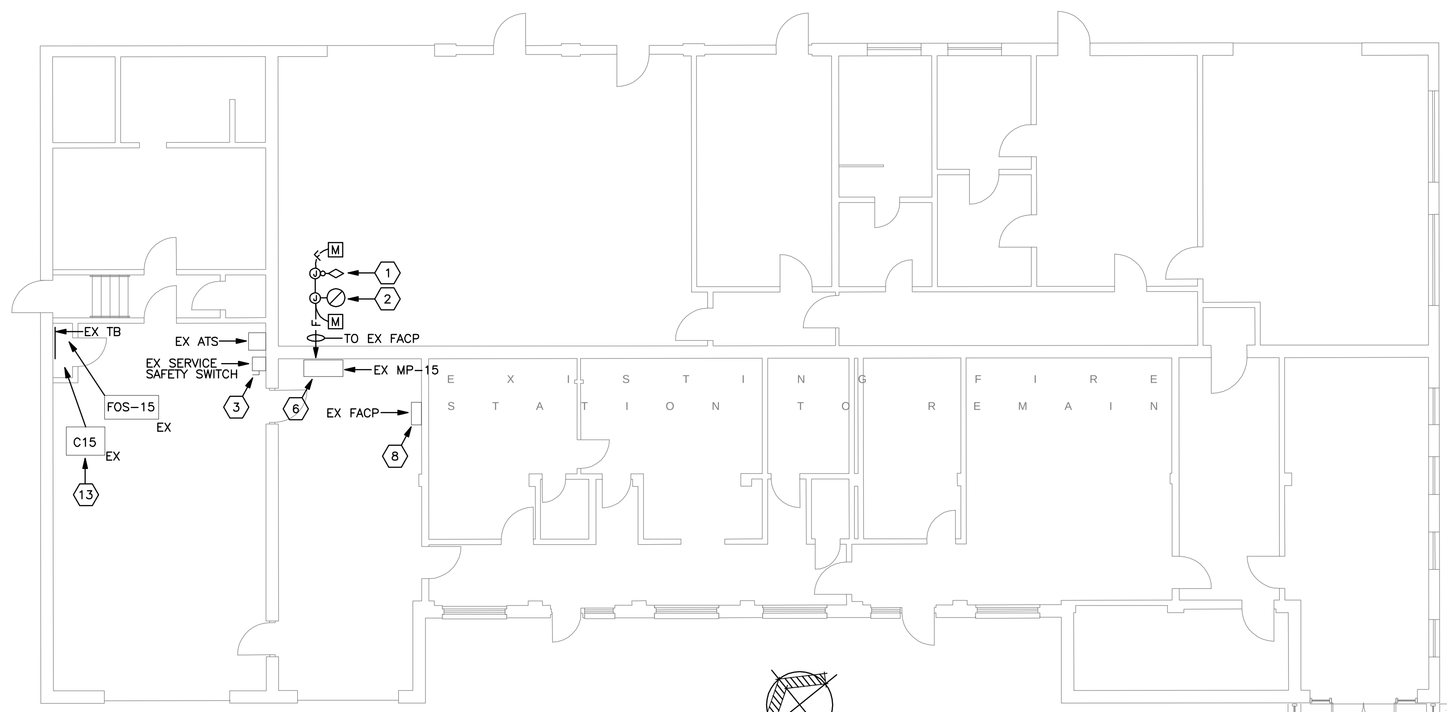

POWER AND AUXILIARY FLOOR PLAN

SCALE: 1/8"–1'–0"

North

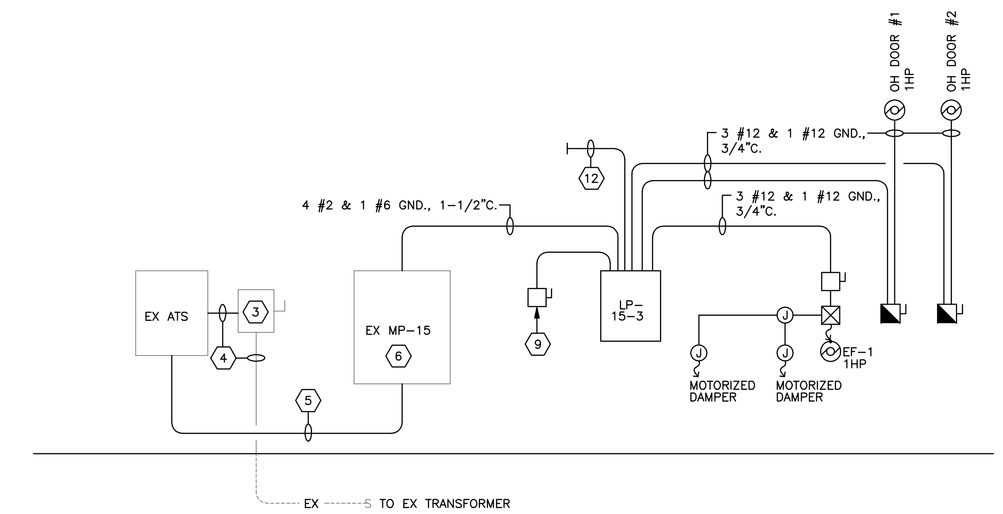

POWER RISER DIAGRAM

NOT TO SCALE

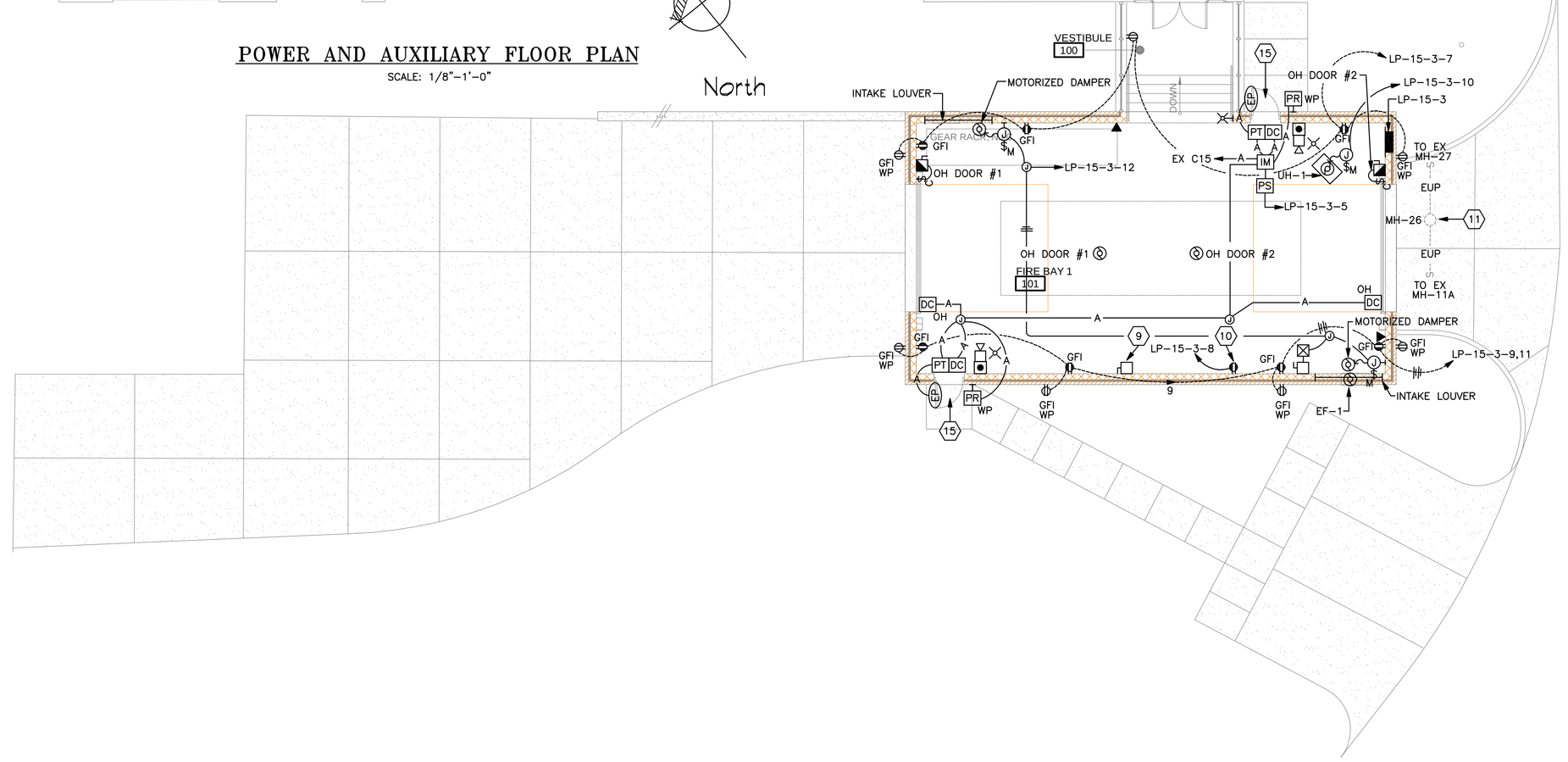

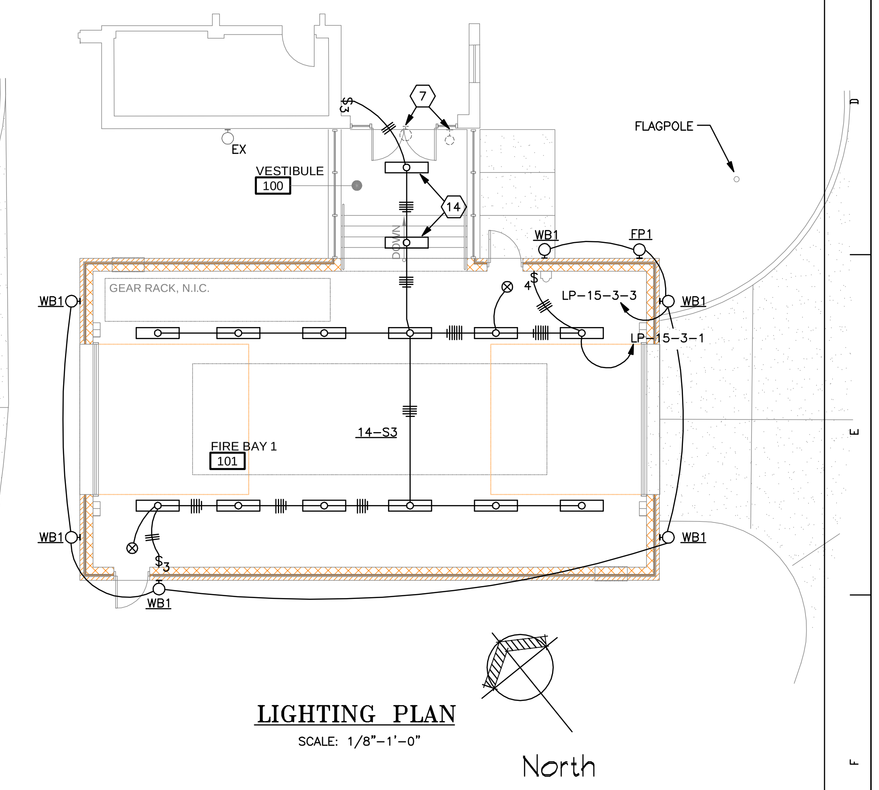

LIGHTING PLAN

SCALE: 1/8"–1'–0"

North

Revisions	Date

AL ABAMA REGISTERED PROFESSIONAL ENGINEER No. 15978 CHARLES CRAIG MILLS

MCE MILLS-CONOLY ENGINEERING, P.C.
8218 Old Federal Road, Montgomery, AL 36117
TELEPHONE: (334) 270–0010 FAX: (334) 270–0040

CAVHCS
Central Alabama Veterans Health Care System

Approvals	Approvals	Drawing Title: ELECTRICAL PLAN	Project Title: MODIFY FIRE BAY, B–15 CENTRAL ALABAMA VETERANS HEALTH CARE SYSTEM TUSKEGEE, ALABAMA	Date: 7/01/11
Approvals	Approvals			Project No.: 619–10–455
Approvals	Approvals	Safety Officer	Building Number: 15 / Checked: CCM / Drawn: ACM	DRAWING NO. E1.0
Approvals	Approvals	Clinical Representative	Location: East Campus, Tuskegee, AL	Dwg. 15 of 16

Veterans Administration

VA FORM 08-6231a, MAR 1984