LIGHTING FIXTURE SCHEDULE

SYMBOL	DESCRIPTION	MANUFACTURER & CATALOG NUMBER	LAMPS	MOUNTING	REMARKS
FP1	9 1/4" X 7 1/4" DIA. METAL HALIDE WALL BRACKET WITH DIE-CAST ALUMINUM HOUSING BRONZE FINISH AND 120V THROUGH 277V ELECTRONIC BALLAST AND PHOTO CELL.	BEGA 7526 MH-120/277 VOLT BRZ 118 (3) 119 (3)	1-70W T6 M.H.	WALL MTD. 17'-0" AFF.	AIM FIXTURE AT FLAGPOLE AS REQUIRED TO ILLUMINATE FLAG AS INDICATED.
S3	4' FLUORESCENT INDUSTRIAL FIXTURE WITH HEAVY DUTY STEEL HOUSING, SPRING LOADED TURRET STYLE SOCKETS, HEAVY DUTY REFLECTOR, 120 VOLT ELECTRONIC BALLAST.	COLUMBIA KL4-332HO-U-3E-U DAY-BRITE HP 332HO 120 1/3 EBI LITHONIA EJS 3 32 120 GEB HC36 METALUX DIM 3 32-120-EB81-AYC WILLIAMS 82 4 332 WGB214 EB3 120	3-32W T-8	SUSPENDED 14'-0" AFF. UNLESS OTHERWISE INDICATED	
WB1	FLUORESCENT WALL BRACKET WITH DIE-CAST ALUMINUM HOUSING, PRISMATIC GLASS LENS, VANDAL RESISTANT, DARK BRONZE FINISH 120 VOLT 0'F BALLAST AND PHOTO CELL.	DAY-BRITE WLS42C12-PE HOLOPHANE W442CFL12SZ-F1-B HUBBEL PVL3-242F-18-BZ-L-2BOC-PBT-1 LITHONIA TWH 2/42TRT 120 TP PE SF WILLIAMS WL5 242T 120 WLS-TP	2-42W TRI-TUBE CF	SURFACE MTD. 8'-0" AFF.	
⊗	SINGLE FACE EXIT LIGHT WITH RED LETTERS ON WHITE FACE, WITH OR WITHOUT ARROWS (AS SHOWN), WHITE HOUSING, LED LAMPS, 120/277 VOLT OPERATION AND EMERGENCY BATTERY UNIT WITH SELF DIAGNOSTIC TESTING.	EMERGI-LITE WWLEDPXN-1-R-PPD LITHONIA LE S W 1 R 120/277 EL N SD PRESCOLITE DMX1REW SURE-LITES CAX-717000-R-W-SD	FURN.	WALL	MOUNT DIRECTLY ABOVE DOOR.

PANELBOARD SCHEDULE

PANEL: LP-15-3 MAINS: 100A MCB SERVICE: 208/120V 3ø 4W
TYPE: NQOD 430L1C CU A.I.C.: 22 KA MOUNTED: SURFACE

DESCRIPTION	VOLT-AMP LOAD PHASE A	PHASE B	PHASE C	CIRCUIT BREAKERS TRIP	POLE	CIR	CIR	TRIP	POLE	VOLT-AMP LOAD PHASE A	PHASE B	PHASE C	DESCRIPTION
LIGHTING-BAY	1400			20	1	1	2	30	3	0			FUTURE VEHICLE EXHAUST
LIGHTING-EXTERIOR		540		20	1	3	4	–	–		0		–
ACCESS CONTROL			360	20	1	5	6	–	–			0	–
RECEPTACLES	1080			20	1	7	8	20	1	180			AIR COMPRESSOR RECEPT
RECEPTACLES		720		20	1	9	10	20	1		800		UH-1
RECEPTACLES			720	20	1	11	12	20	1			500	MOTORIZED DAMPERS
EF-1	560			20	3	13	14	20	1	0			SPARE
–		560		–	–	15	16	20	1		0		SPARE
–			560	–	–	17	18	20	1			0	SPARE
OVERHEAD DOOR #1	560			20	3	19	20	20	1	0			SPARE
–		560		–	–	21	22	20	1		0		SPACE
–			560	–	–	23	24	20	1			0	SPACE
OVERHEAD DOOR #2	560			20	3	25	26	20	1	0			SPACE
–		560		–	–	27	28	20	1		0		SPACE
–			560	–	–	29	30	20	1			0	SPACE
SUB TOTAL	4160	2940	2760							180	800	500	SUB TOTAL

CONNECTED LOAD PHASE A: 4340
CONNECTED LOAD PHASE B: 3740
CONNECTED LOAD PHASE C: 3260
TOTAL CONNECTED LOAD : 10260

PANELBOARD NOTES:

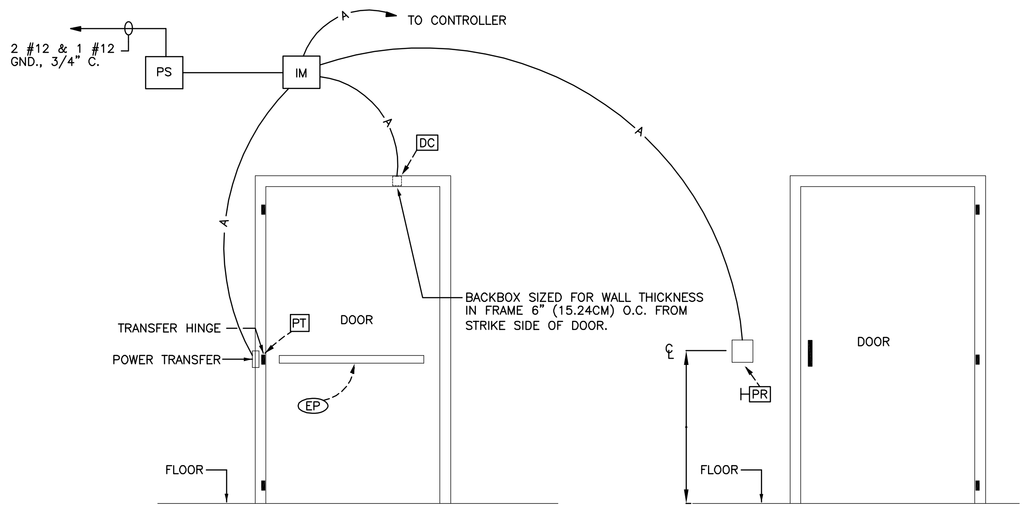

INTERIOR DOOR ELEVATION
NO SCALE

EXTERIOR DOOR ELEVATION
NO SCALE

DETAIL NOTES:

1. REFER TO FLOOR PLAN LAYOUTS RELATIVE TO SIDE OF DOOR EACH DEVICE IS LOCATED.
2. ALL WIRING SHALL BE CONCEALED IN CONDUIT IN WALL OR IN EXISTING STORE FRONT MATERIAL AS REQUIRED UNLESS OTHERWISE INDICATED.

KEYED NOTES:

(1) — 2 CAT 6 CABLES IN 3/4" CONDUIT WITH INSULATED BUSHINGS EACH END AS REQUIRED. TERMINATE CABLES AT EXISTING TELECOMMUNICATIONS PATCH PANELS IN TELECOMMUNICATIONS CLOSET AND AT NEW OUTLETS AS DIRECTED BY COTR. TELECOM OUTLETS SHALL MATCH EXISTING OUTLETS IN BUILDING. EACH CAT 6 CABLE RUN SHALL HAVE ONE WHITE JACKET AND ONE BLUE JACKET. ALL TERMINATIONS SHALL BE MADE BY A NICET LEVEL II TECHNICIAN AND CABLES SHALL BE TESTED AND CERTIFIED TO MEET TIA/EIA STANDARDS.

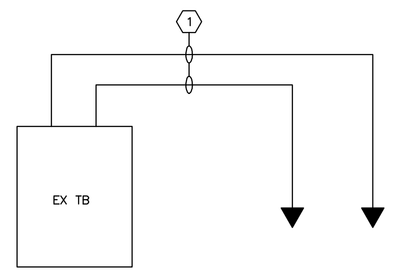

TELECOM RISER DIAGRAM
NOT TO SCALE

Revisions	Date

ALABAMA REGISTERED No. 15978 PROFESSIONAL ENGINEER CHARLES CRAIG MILLS

MCE MILLS-CONOLY ENGINEERING, P.C.
8218 Old Federal Road Montgomery, AL 36117
TELEPHONE: (334) 270-0010 FAX: (334) 270-0040

CAVHCS Central Alabama Veterans Health Care System

Approved	Approved	Drawing Title: SCHEDULES AND DETAILS	Project Title: MODIFY FIRE BAY, B-15 CENTRAL ALABAMA VETERANS HEALTH CARE SYSTEM TUSKEGEE, ALABAMA	Date: 7/01/11	Veterans Administration
Approved	Approved			Project No.: 619-10-455	
Approved	Approved	Safety Officer	Building Number: 15 / Checked: CCM / Drawn: ACM	DRAWING NO.: E1.1	
Approved	Approved	Clinical Representative	Location: East Campus, Tuskegee, AL	Dwg. 16 of 16	

VA FORM 08-6231a, MAR 1984