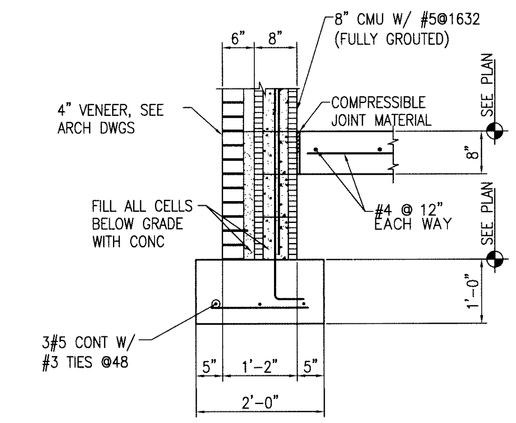


SECTION 1/S2.1
SCALE: 3/4"=1'-0"

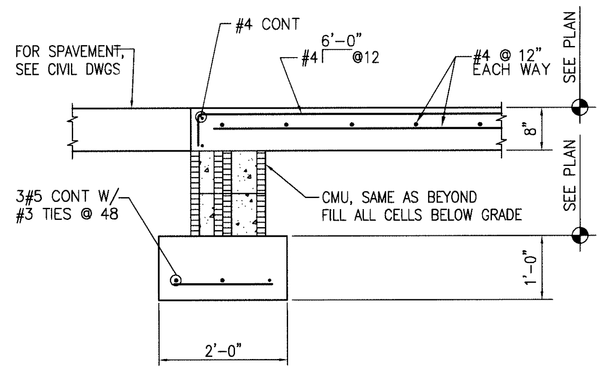


SECTION 2/S2.1
SCALE: 3/4"=1'-0"

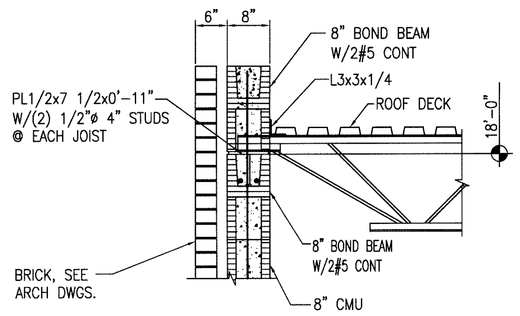


SECTION 3/S2.1
3/4"=1'-0"

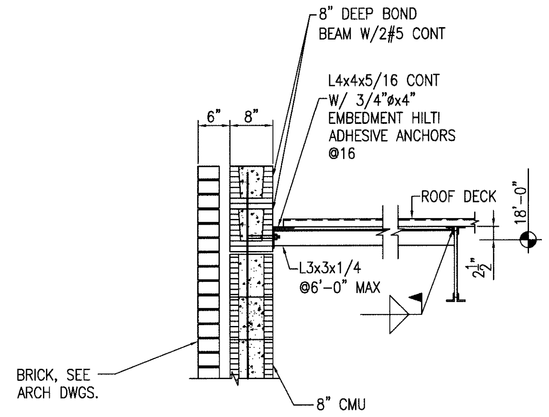


SECTION 4/S2.1
3/4"=1'-0"

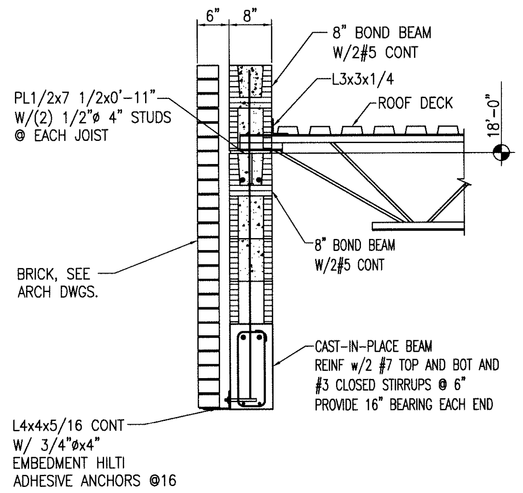


SECTION 5/S2.1
3/4"=1'-0"

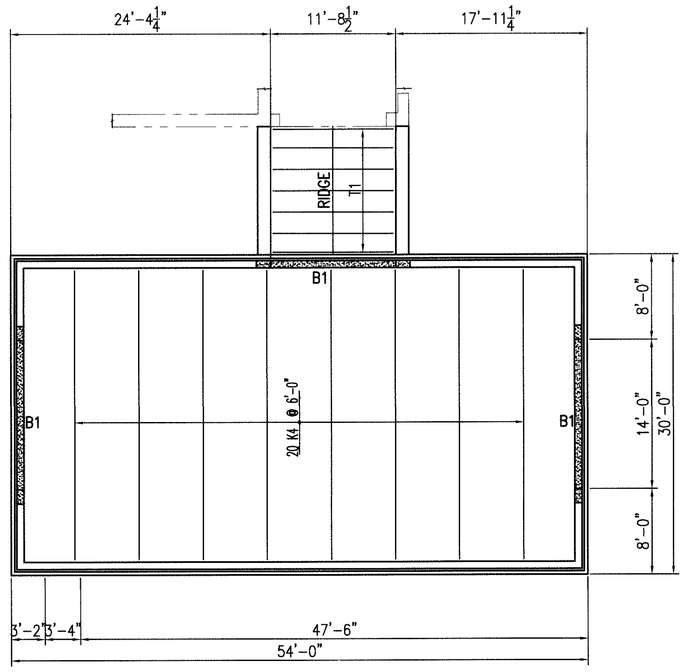


## ROOF FRAMING PLAN
SCALE: 1/8"=1'-0"

Project North

1. JOIST BEARING ELEVATIONS 18'-0" AFF, UNLESS NOTED.
2. ROOF CONSTRUCTION: 1 ½", 22GA ROOF DECK ON STEEL JOIST, BEAMS AND JOIST GIRDERS. SEE GENERAL NOTES.
3. SPACE JOISTS EVENLY BETWEEN WALLS OR COLUMN CENTERLINES, UNLESS NOTED.
4. HANGER LOCATIONS FOR PIPING LARGER THAN 3" IN DIAMETER MUST BE COORDINATED BY GENERAL CONTRACTOR WITH THE JOIST MANUFACTURER.
5. ROOF DECK ATTACHMENT: 5/8"ø PUDDLE WELDS ON 36/7 PATTERN W/ 4#10 SIDELAP FASTENERS PER SPAN.

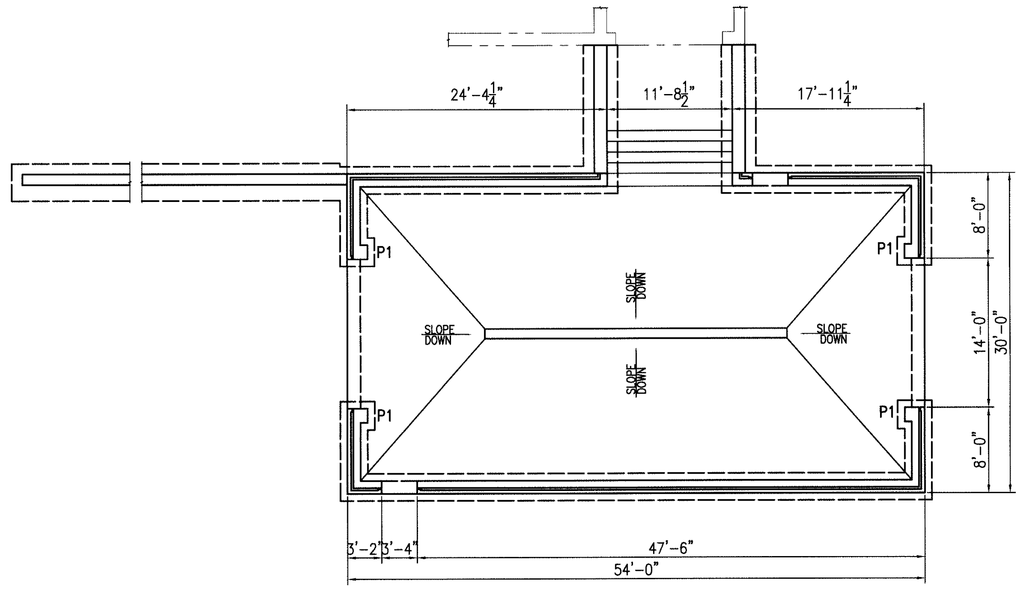


## FOUNDATION AND FLOOR PLAN
SCALE: 1/8""=1'-0"

Project North

1. TOP OF FINISH FLOOR ELEVATION 428.17', UNLESS NOTED.
2. TOP OF FOOTING ELEVATION 426.17', UNLESS NOTED.
3. GENERAL CONTRACTOR COORDINATE LOCATION OF ALL REQUIRED FOOTING STEPS WITH CIVIL,PLUMBING AND UTILITY DRAWINGS AND EXISTING CONDITIONS.
4. GENERAL CONTRACTOR SHALL COORDINATE ALL FOOTINGS, INCLUDING STEPS AND REINFORCING.
5. 8" SLAB ON GRADE, SEE GENERAL NOTES.

| Revisions | Date |
|---|---|
| | |


ALABAMA REGISTERED PROFESSIONAL ENGINEER No. 16034 GARRY JONES

MCE MILLS-CONOLY ENGINEERING, P.C.
8218 Old Federal Road
TELEPHONE: (334) 270-0010
Montgomery, AL 36117
FAX: (334) 270-0040


CAVHCS
Central Alabama Veterans Health Care System

| | | | | |
|---|---|---|---|---|
| Approved: | Approved: | Drawing Title: PLANS & SECTIONS | Project Title: MODIFY FIRE BAY, B-15 CENTRAL ALABAMA VETERANS HEALTH CARE SYSTEM TUSKEGEE, ALABAMA | Date: 7/01/11 |
| Approved: | Approved: | | | Project No.: 619-10-455 |
| Approved: | Approved: | Safety Officer | Building Number: 15 / Checked: CCM / Drawn: ACM | DRAWING NO. S2.1 Dwg. 9 Of 16 |
| Approved: | Approved: | Clinical Representative | Location: East Campus, Tuskegee, AL | Veterans Administration |

VA FORM 08-6231A, MAR 1984

U.S.GOVERNMENT PRINTING OFFICE: 1984-440-487