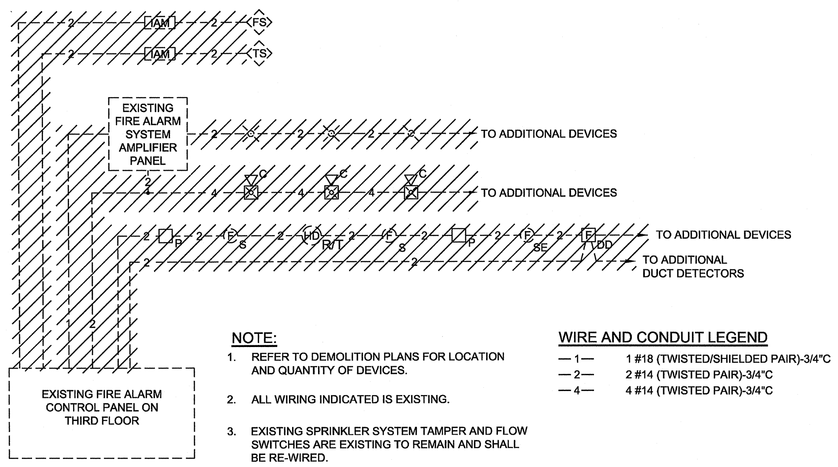

NOTE:

1. REFER TO DEMOLITION PLANS FOR LOCATION AND QUANTITY OF DEVICES.
2. ALL WIRING INDICATED IS EXISTING.
3. EXISTING SPRINKLER SYSTEM TAMPER AND FLOW SWITCHES ARE EXISTING TO REMAIN AND SHALL BE RE-WIRED.

WIRE AND CONDUIT LEGEND

— 1 —	1 #18 (TWISTED/SHIELDED PAIR)-3/4"C
— 2 —	2 #14 (TWISTED PAIR)-3/4"C
— 4 —	4 #14 (TWISTED PAIR)-3/4"C

1 FIRE ALARM RISER DIAGRAM - DEMOLITION

NOT TO SCALE

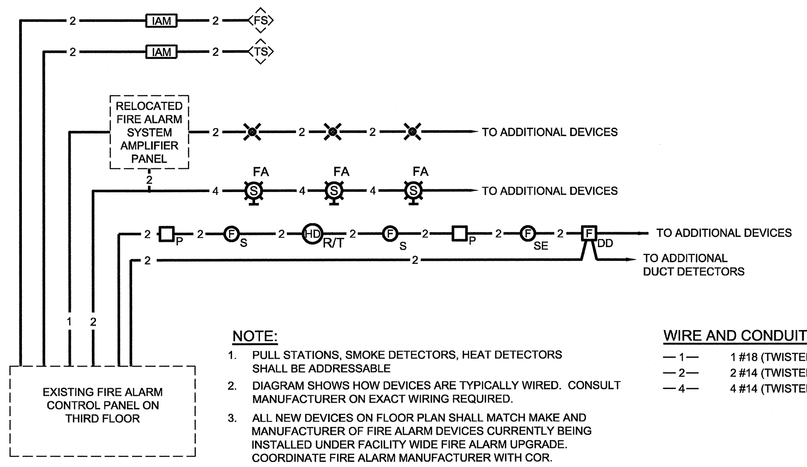

NOTE:

1. PULL STATIONS, SMOKE DETECTORS, HEAT DETECTORS SHALL BE ADDRESSABLE
2. DIAGRAM SHOWS HOW DEVICES ARE TYPICALLY WIRED. CONSULT MANUFACTURER ON EXACT WIRING REQUIRED.
3. ALL NEW DEVICES ON FLOOR PLAN SHALL MATCH MAKE AND MANUFACTURER OF FIRE ALARM DEVICES CURRENTLY BEING INSTALLED UNDER FACILITY WIDE FIRE ALARM UPGRADE. COORDINATE FIRE ALARM MANUFACTURER WITH COR.
4. ALL WIRING INDICATED SHALL BE NEW.
5. PROVIDE NEW ADDRESSABLE MODULES AND ALL NEW WIRE/CONDUIT FOR EXISTING TO REMAIN SPRINKLER SYSTEM TAMPER AND FLOW SWITCHES

WIRE AND CONDUIT LEGEND

— 1 —	1 #18 (TWISTED/SHIELDED PAIR)-3/4"C
— 2 —	2 #14 (TWISTED PAIR)-3/4"C
— 4 —	4 #14 (TWISTED PAIR)-3/4"C

2 FIRE ALARM RISER DIAGRAM - NEW WORK

NOT TO SCALE

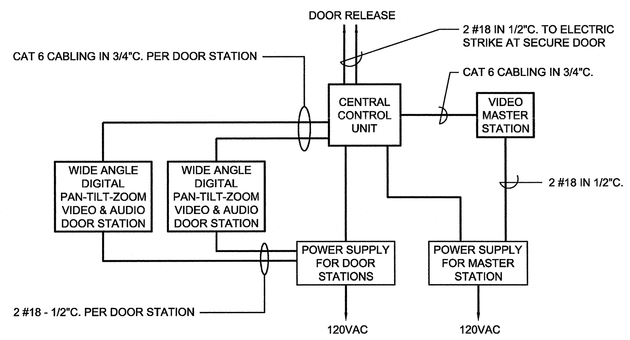

3 AUDIO/VIDEO ENTRANCE INTERCOM WIRING DIAGRAM

NOT TO SCALE

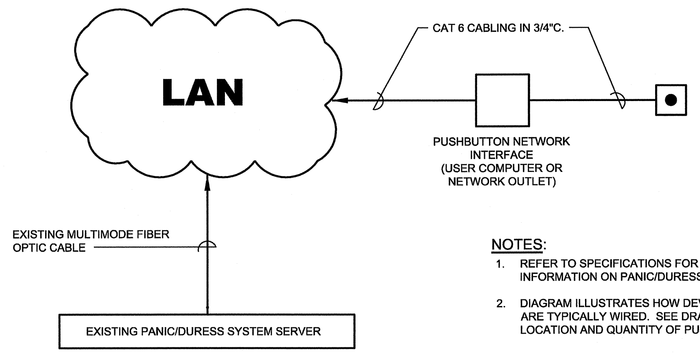

NOTES:

1. REFER TO SPECIFICATIONS FOR DETAILED INFORMATION ON PANIC/DURESS SYSTEM.
2. DIAGRAM ILLUSTRATES HOW DEVICES OF SYSTEM ARE TYPICALLY WIRED. SEE DRAWING ES301 FOR LOCATION AND QUANTITY OF PUSHBUTTONS.

4 PANIC/DURESS SYSTEM DIAGRAM

NOT TO SCALE

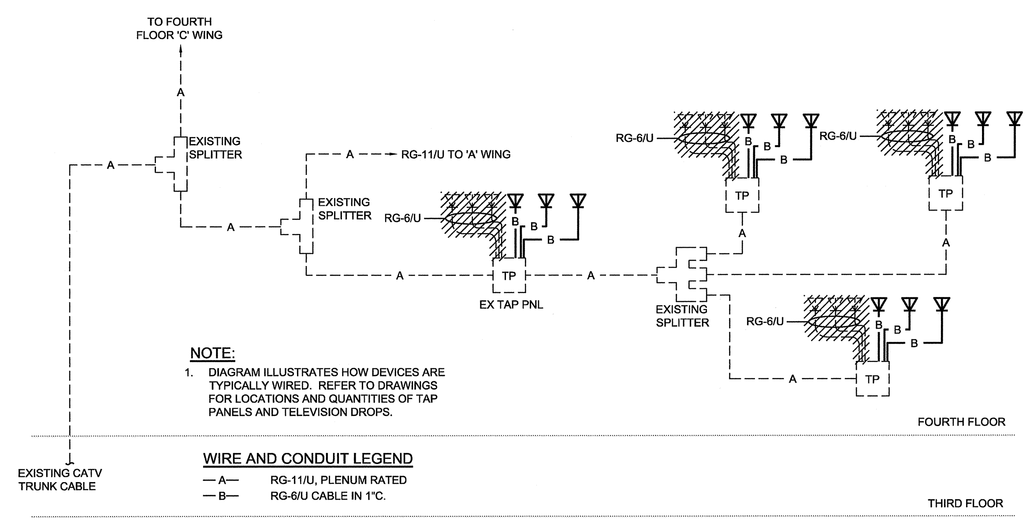

NOTE:

1. DIAGRAM ILLUSTRATES HOW DEVICES ARE TYPICALLY WIRED. REFER TO DRAWINGS FOR LOCATIONS AND QUANTITIES OF TAP PANELS AND TELEVISION DROPS.

WIRE AND CONDUIT LEGEND

— A —	RG-11/U, PLENUM RATED
— B —	RG-6/U CABLE IN 1"C.

5 TELEVISION SYSTEM RISER DIAGRAM

NOT TO SCALE

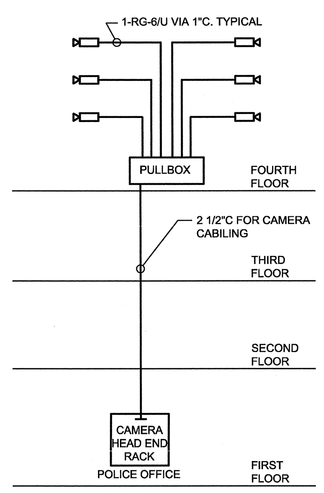

NOTES:

1. REFER TO FLOOR PLANS FOR QUANTITES OF CAMERAS AND ROUTING OF 2 1/2"C FROM PULLBOX TO POLICE ROOM 1175.
2. AT POLICE ROOM PROVIDE A 20' SLACK FOR EACH CAMERA CIRCUIT TO ALLOW FOR TERMINATION BY OTHERS.

6 CCTV SYSTEM WIRING DIAGRAM

NOT TO SCALE

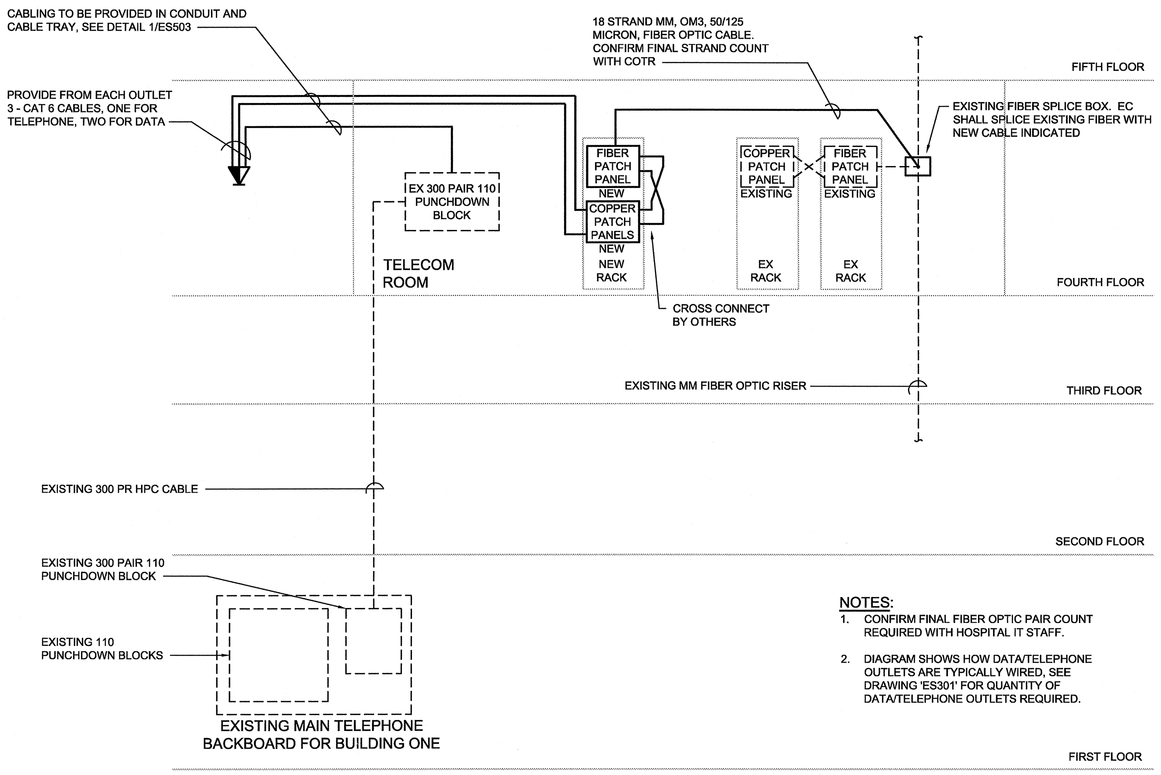

NOTES:

1. CONFIRM FINAL FIBER OPTIC PAIR COUNT REQUIRED WITH HOSPITAL IT STAFF.
2. DIAGRAM SHOWS HOW DATA/TELEPHONE OUTLETS ARE TYPICALLY WIRED, SEE DRAWING 'ES301' FOR QUANTITY OF DATA/TELEPHONE OUTLETS REQUIRED.

7 DATA & TELEPHONE SYSTEM RISER DIAGRAM

NOT TO SCALE

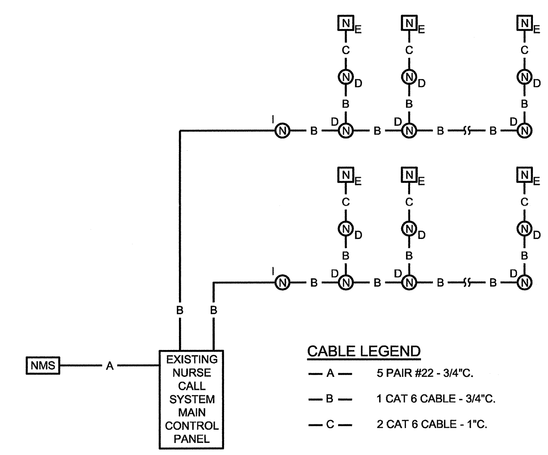

CABLE LEGEND

— A —	5 PAIR #22 - 3/4"C.
— B —	1 CAT 6 CABLE - 3/4"C.
— C —	2 CAT 6 CABLE - 1"C.

NOTES:

1. THIS DIAGRAM IS SHOWN TO ILLUSTRATE HOW DEVICES ARE TYPICALLY WIRED, CONFIRM WITH MANUFACTURER ON EXACT TYPE AN AMOUNT OF CABLING REQUIRED. REFER TO FLOOR PLANS FOR EXACT QUANTITIES OF DEVICES NEEDED TO FORM THE COMPLETE SYSTEM.

8 NURSE CALL SYSTEM ONE-LINE DIAGRAM

NOT TO SCALE

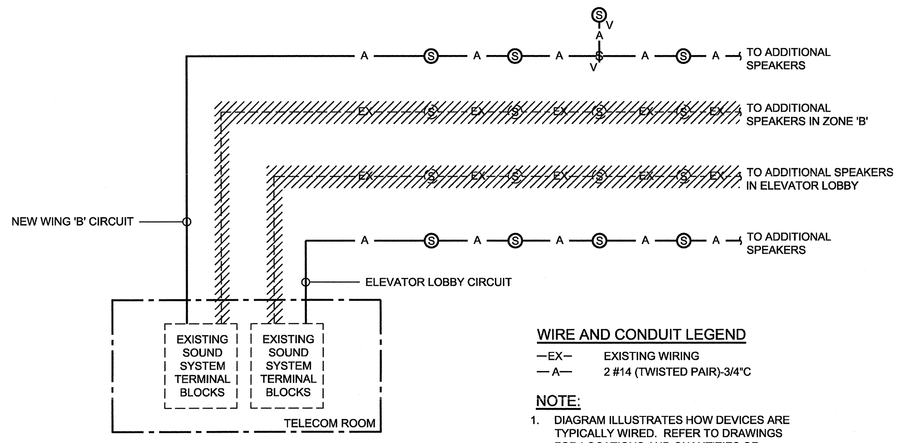

WIRE AND CONDUIT LEGEND

— EX —	EXISTING WIRING
— A —	2 #14 (TWISTED PAIR)-3/4"C

NOTE:

1. DIAGRAM ILLUSTRATES HOW DEVICES ARE TYPICALLY WIRED. REFER TO DRAWINGS FOR LOCATIONS AND QUANTITIES OF SOUND SYSTEM SPEAKERS.

9 SOUND SYSTEM DIAGRAM

NOT TO SCALE

Project North True North

100% CONSTRUCTION DOCUMENT SUBMISSION

Revisions:	Date

CONSULTANTS:

H.F. LENZ COMPANY
1407 Scalp Avenue Johnstown, PA 15904
Phone: 814-269-9300 FAX: 814-269-9301
cadd@hflenz.com www.hflenz.com
Engineers • Planners • Surveyors • Energy Consultants

TIMOTHY M. EARNEST REGISTERED PROFESSIONAL ENGINEER 14735 STATE OF WEST VIRGINIA

ARCHITECT/ENGINEERS:

IKM
architecture planning interior design
IKM Incorporated
One PPG Place
Pittsburgh, PA 15222
412-281-1337
www.ikminc.com

Drawing Title: ELECTRICAL SPECIAL SYSTEMS DIAGRAMS	Project Title: VA Clarksburg Inpatient Mental Health Unit	VA Project Number 540-11-106 IKM Project Number 11-024	Office of Construction and Facilities Management
Approved: Project Director	Location: VAMC Clarksburg West Virginia	Building Number	
	Date: 15 DECEMBER 2011 / Checked: TME / Drawn: RJD	Drawing Number: ES403 Dwg. of	Department of Veterans Affairs

VA FORM 08-6231