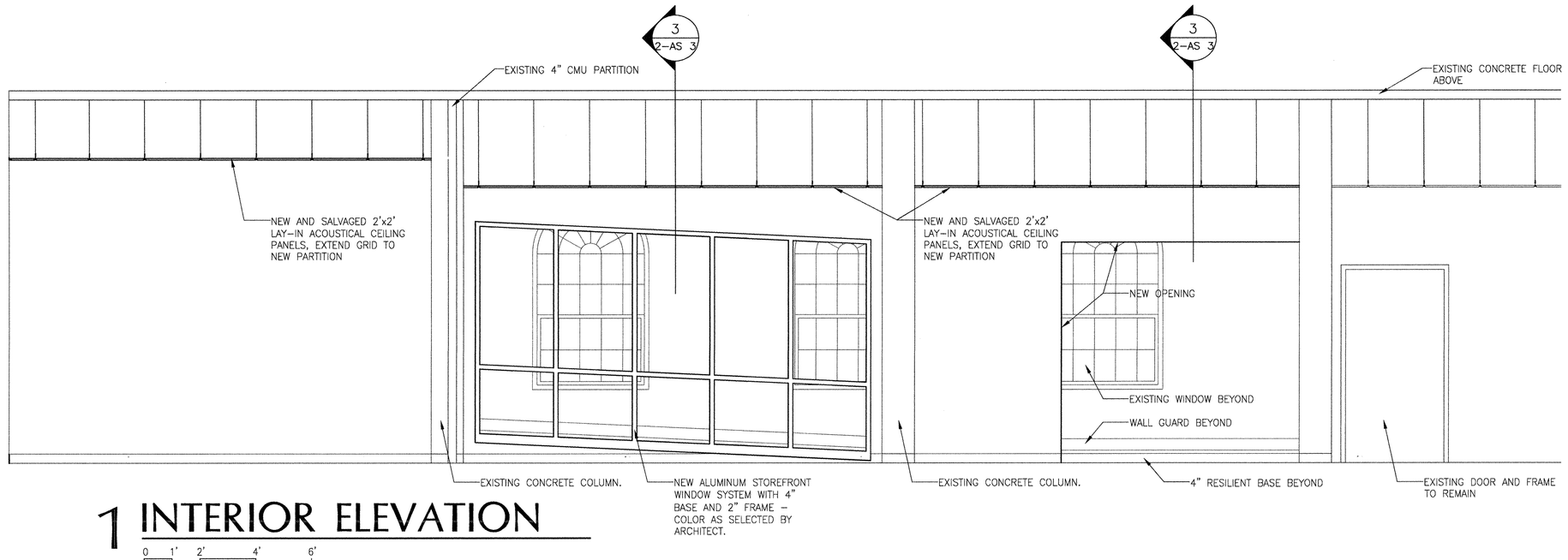


# 1 INTERIOR ELEVATION

0 1' 2' 4' 6'

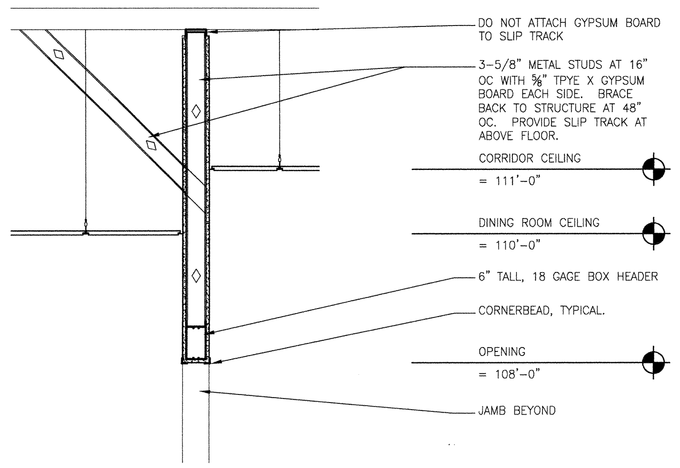


# 2 DETAIL

0 6" 1' 2' 3'

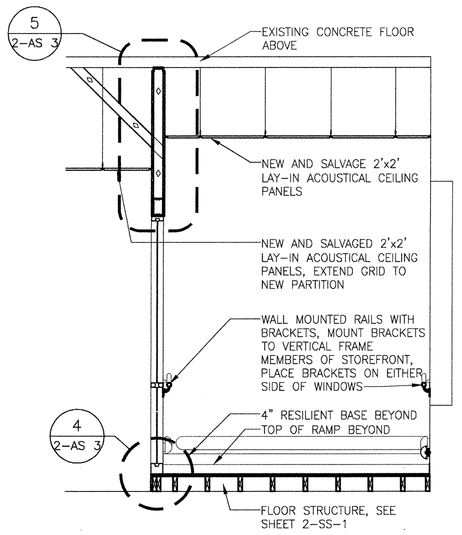


# 3 INTERIOR ELEVATION

0 1' 2' 4' 6'

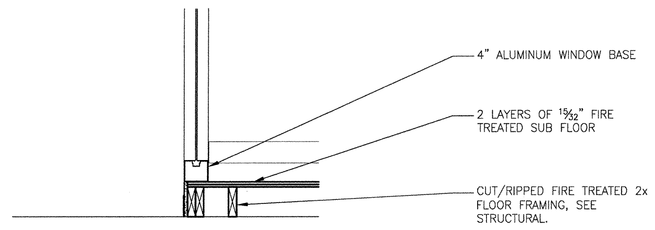


# 4 DETAIL

0 6" 1' 2' 3'

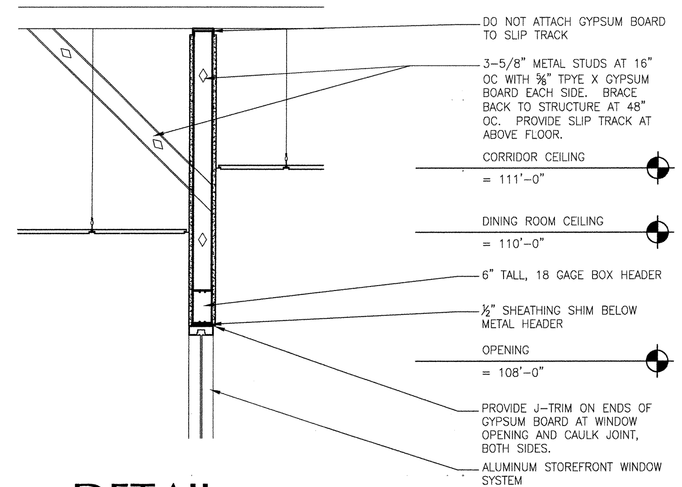


# 5 DETAIL

0 6" 1' 2' 3'

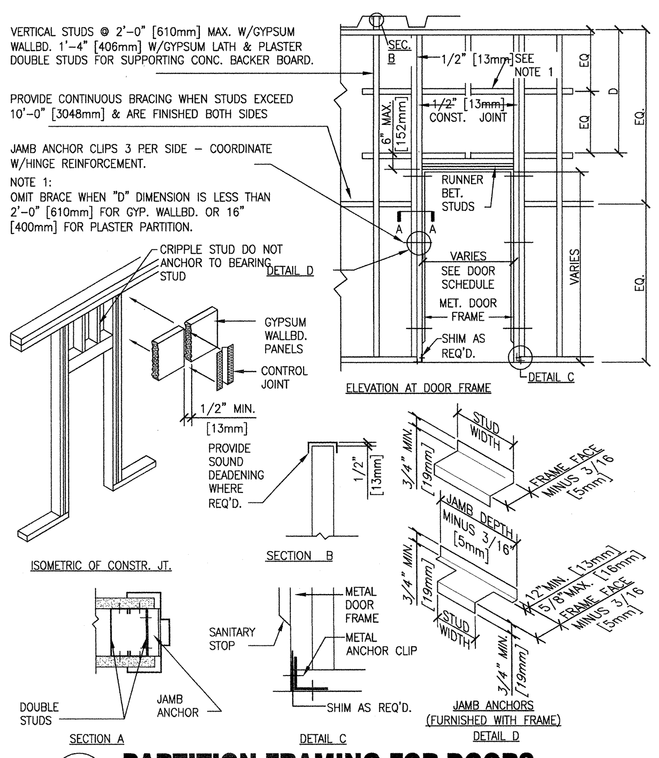


## 5 PARTITION FRAMING FOR DOORS

NTS

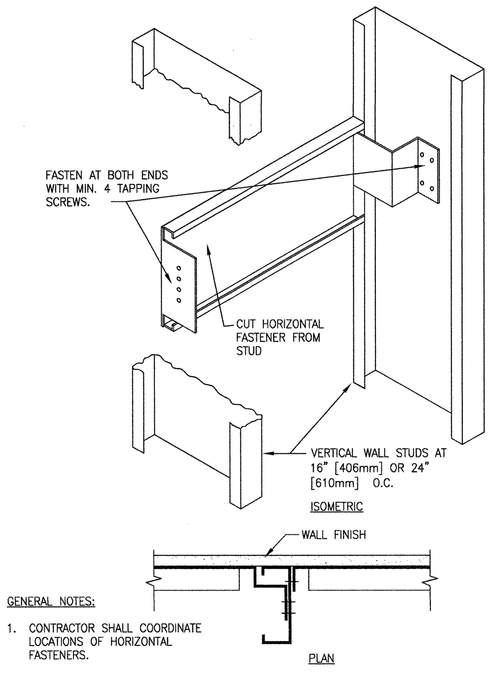


## 6 ANCHORAGE - GRAB BARS AND CABINETS

NTS

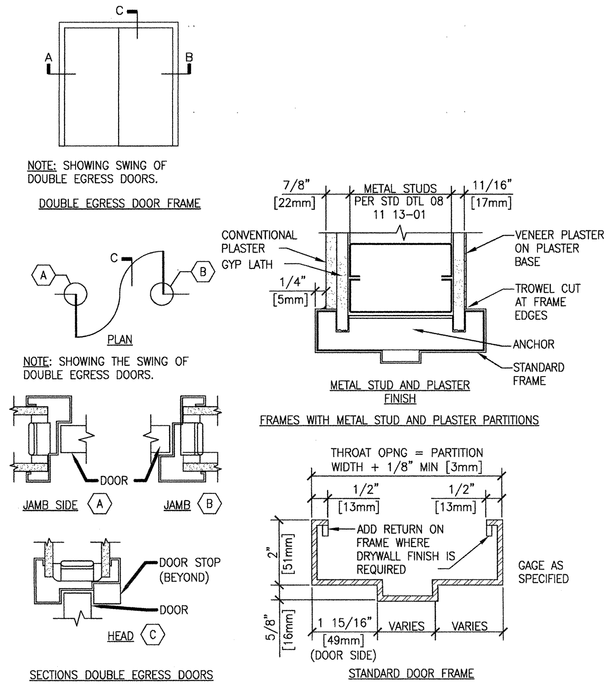


## 7 INTERIOR DOOR FRAMES

NTS

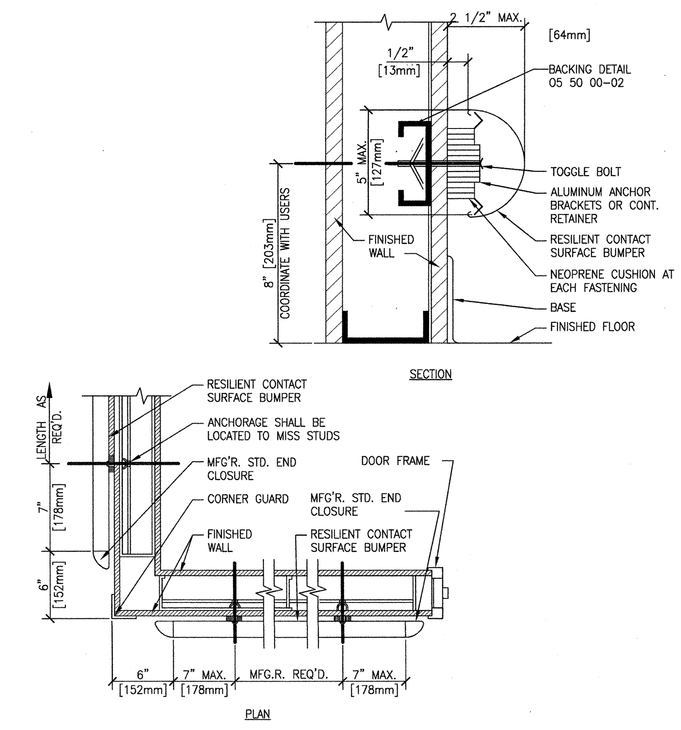


## 8 WALL GUARDS

NTS

## KEY PLAN NTS

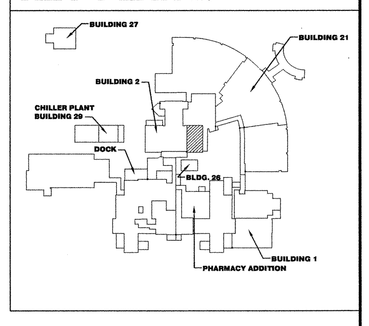


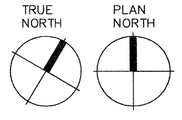


100% CONSTRUCTION DOCUMENTS
FULLY SPRINKLERED

| Revisions: | Date |
|---|---|
| | |

**CONSULTANTS:**

JOSHUA HILL NORDGREN
REGISTERED ARCHITECT
ghn
RESEARCH, ND CORP
ARKANSAS
3-2-12

**ARCHITECT / ENGINEERS:**

ghn ARCHITECTS ENGINEERS
300 SOUTH JEFFERSON AVE / SUITE 301
SPRINGFIELD, MISSOURI
PHONE 417-869-0719 FAX 417-869-3044

Drawing Title: **ARCHITECTURAL ELVATIONS AND DETAILS**

Approved: Project Director

Project Title: **A&E to Connect Clinical Addition to Patient Dining Veterans Affairs Medical Ctr**

Project Number: **564-10-102** (GHN Project Number 11-510.00)

Building Number: **2 & 21**

Location: **Fayetteville, AR**

Drawing Number: **2-AS 3** (Dwg. 4 of 8)

Date: March 02, 2012 | Checked: - | Drawn: DF

**Office of Facilities Management**

Department of Veterans Affairs

VA FORM 08-6231, OCT 1978