UPGRADE ELECTRICAL TRANSFORMERS

PROJECT NO. 568-12-110

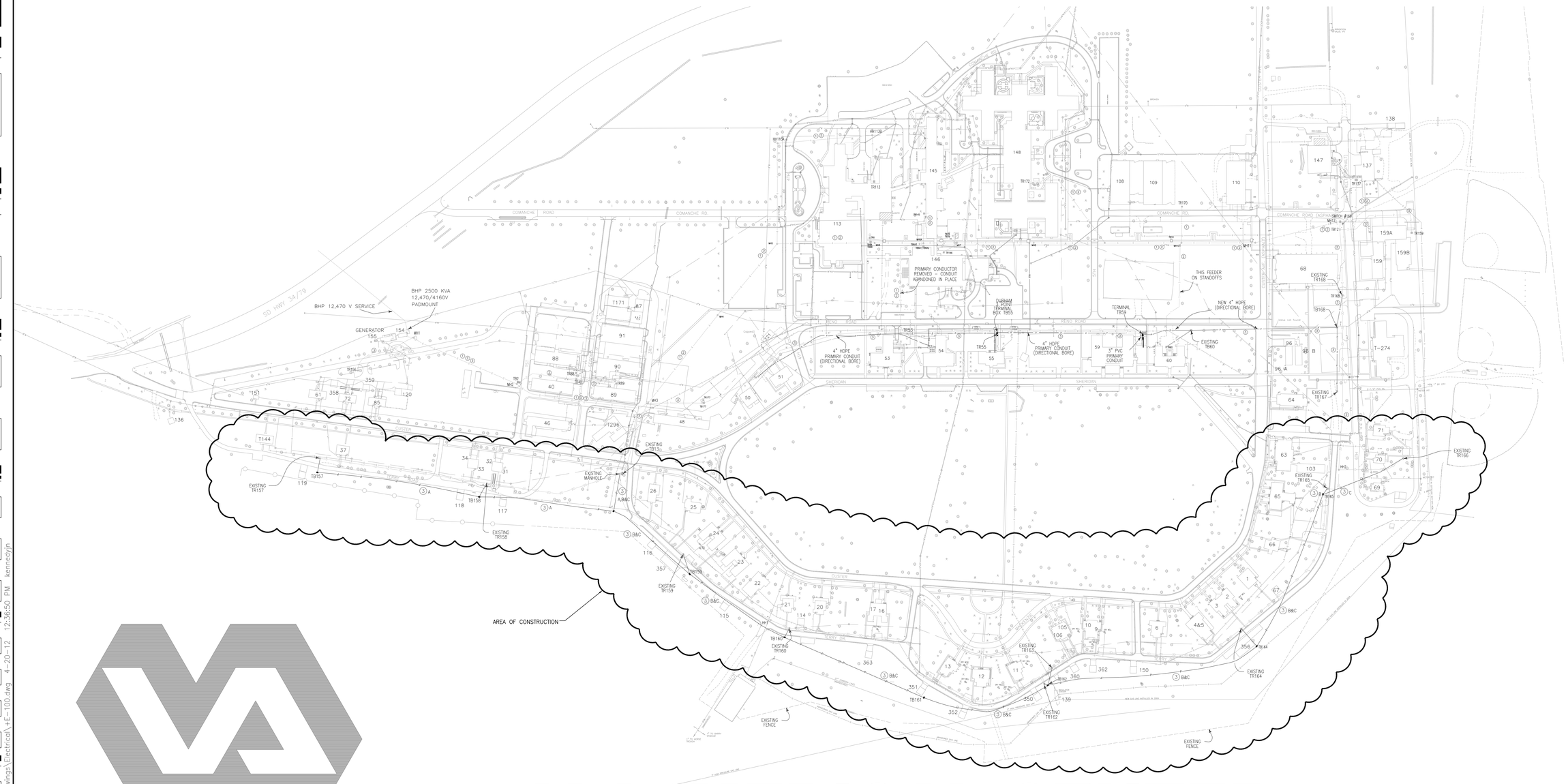

V.A. MEDICAL CENTER
FT. MEADE, S.D.

SHEET INDEX

E-100 OVERALL SITE PLAN
ES101 ELECTRICAL SITE PLAN - WEST
ES102 ELECTRICAL SITE PLAN - EAST
E-601 POWER RISER DIAGRAM
E-602 ELECTRICAL SCHEDULES

PLAN NORTH

F1 OVERALL SITE PLAN
SCALE: 1" = 150'-0"

Revisions:	Date

CONSULTANTS:

REGISTERED PROFESSIONAL ENGINEER
6729
DARRELL L. BREN
REG. NO.
DATE: 4-20-12

ARCHITECT/ENGINEERS:

TSP, Inc.
1112 N. West Ave.
Sioux Falls, SD 57104
phone: (605) 336-1160
fax: (605) 336-7926
www.teamtsp.com
TSP PROJECT #04111011
To Solve. To Excel. Together.

Drawing Title: OVERALL SITE PLAN

Approved: Project Director

Project Title: UPGRADE ELECTRICAL TRANSFORMERS

Project Number: 568-12-110

Building Number: CAMPUS

Location: FORT MEADE SD

Date: 04-20-12 | Checked: DLB | Drawn: JNK

Drawing Number: E-100

Dwg.1 of 5

Office of Construction and Facilities Management

Department of Veterans Affairs

VA FORM 08-6231

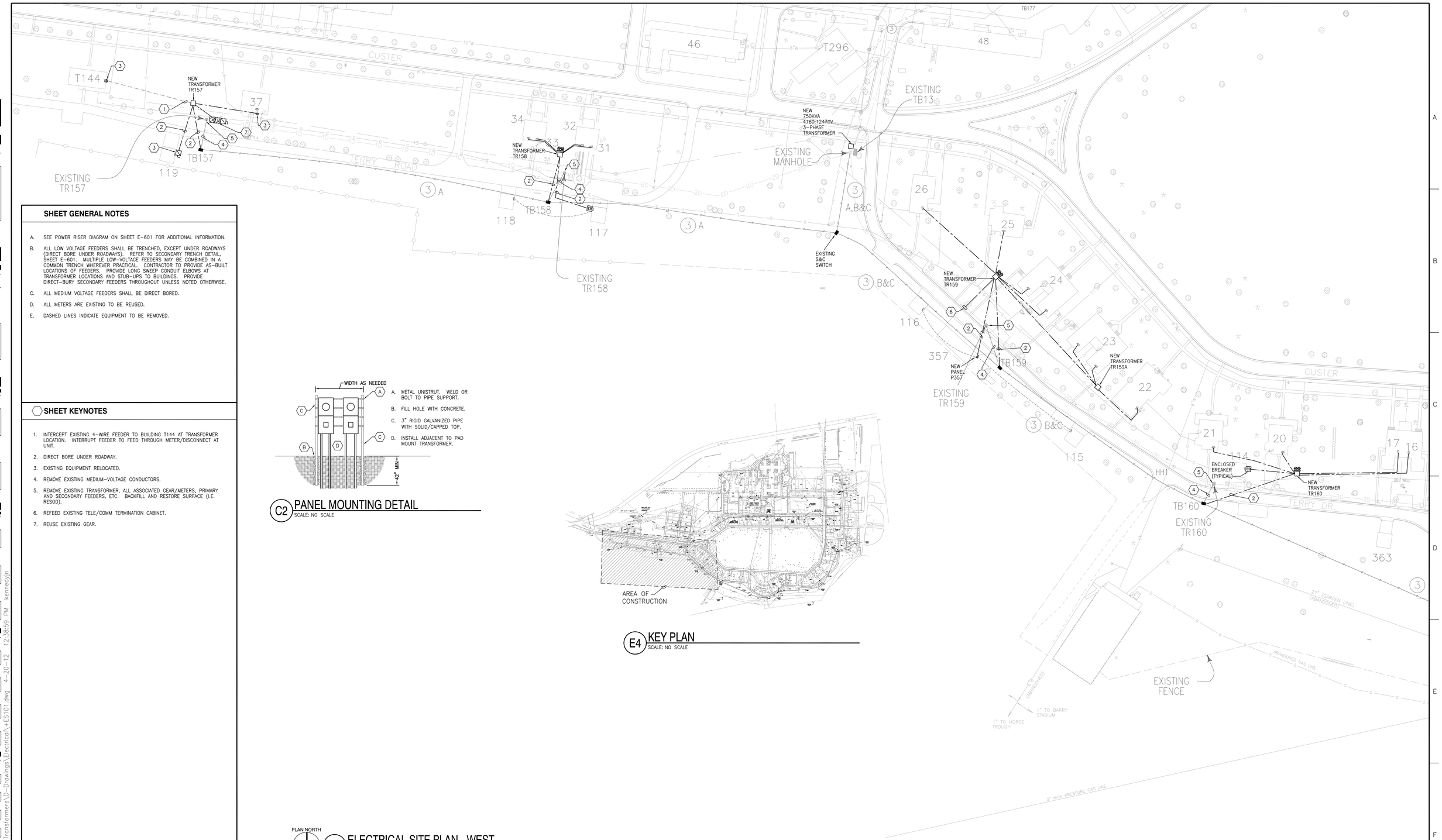

SHEET GENERAL NOTES

A. SEE POWER RISER DIAGRAM ON SHEET E-601 FOR ADDITIONAL INFORMATION.

B. ALL LOW VOLTAGE FEEDERS SHALL BE TRENCHED, EXCEPT UNDER ROADWAYS (DIRECT BORE UNDER ROADWAYS). REFER TO SECONDARY TRENCH DETAIL, SHEET E-601. MULTIPLE LOW-VOLTAGE FEEDERS MAY BE COMBINED IN A COMMON TRENCH WHEREVER PRACTICAL. CONTRACTOR TO PROVIDE AS-BUILT LOCATIONS OF FEEDERS. PROVIDE LONG SWEEP CONDUIT ELBOWS AT TRANSFORMER LOCATIONS AND STUB-UPS TO BUILDINGS. PROVIDE DIRECT-BURY SECONDARY FEEDERS THROUGHOUT UNLESS NOTED OTHERWISE.

C. ALL MEDIUM VOLTAGE FEEDERS SHALL BE DIRECT BORED.

D. ALL METERS ARE EXISTING TO BE REUSED.

E. DASHED LINES INDICATE EQUIPMENT TO BE REMOVED.

SHEET KEYNOTES

1. INTERCEPT EXISTING 4-WIRE FEEDER TO BUILDING T144 AT TRANSFORMER LOCATION. INTERRUPT FEEDER TO FEED THROUGH METER/DISCONNECT AT UNIT.
2. DIRECT BORE UNDER ROADWAY.
3. EXISTING EQUIPMENT RELOCATED.
4. REMOVE EXISTING MEDIUM-VOLTAGE CONDUCTORS.
5. REMOVE EXISTING TRANSFORMER, ALL ASSOCIATED GEAR/METERS, PRIMARY AND SECONDARY FEEDERS, ETC. BACKFILL AND RESTORE SURFACE (I.E. RESOD).
6. REFEED EXISTING TELE/COMM TERMINATION CABINET.
7. REUSE EXISTING GEAR.

A. METAL UNISTRUT. WELD OR BOLT TO PIPE SUPPORT.

B. FILL HOLE WITH CONCRETE.

C. 3" RIGID GALVANIZED PIPE WITH SOLID/CAPPED TOP.

D. INSTALL ADJACENT TO PAD MOUNT TRANSFORMER.

C2 PANEL MOUNTING DETAIL
SCALE: NO SCALE

E4 KEY PLAN
SCALE: NO SCALE

PLAN NORTH

F2 ELECTRICAL SITE PLAN - WEST
SCALE: 1" = 60'-0"

Revisions	Date

CONSULTANTS:

REGISTERED PROFESSIONAL ENGINEER REG. NO. 6729 DARRELL L. BREN — DATE: 4-20-12

ARCHITECT/ENGINEERS:

TSP. Inc.
1112 N. West Ave.
Sioux Falls, SD 57104
phone: (605) 336-1160
fax: (605) 336-7926
www.teamtsp.com
TSP PROJECT #04111011

To Solve. To Excel. Together.

Drawing Title: ELECTRICAL SITE PLAN - WEST

Approved Project Director:

Project Title: UPGRADE ELECTRICAL TRANSFORMERS

Location: FORT MEADE SD

Date: 04-20-12 | Checked: DLB | Drawn: JNK

Project Number: 568-12-110

Building Number: CAMPUS

Drawing Number: ES101

Dwg 2 of 5

Office of Construction and Facilities Management

Department of Veterans Affairs

VA FORM 08-6231

G:\2011\04111011 Dept of VA (V23) Upgrade Elec Transformers\D-Drawings\Electrical\ES101.dwg 4-20-12 12:38:59 PM kennedyjn

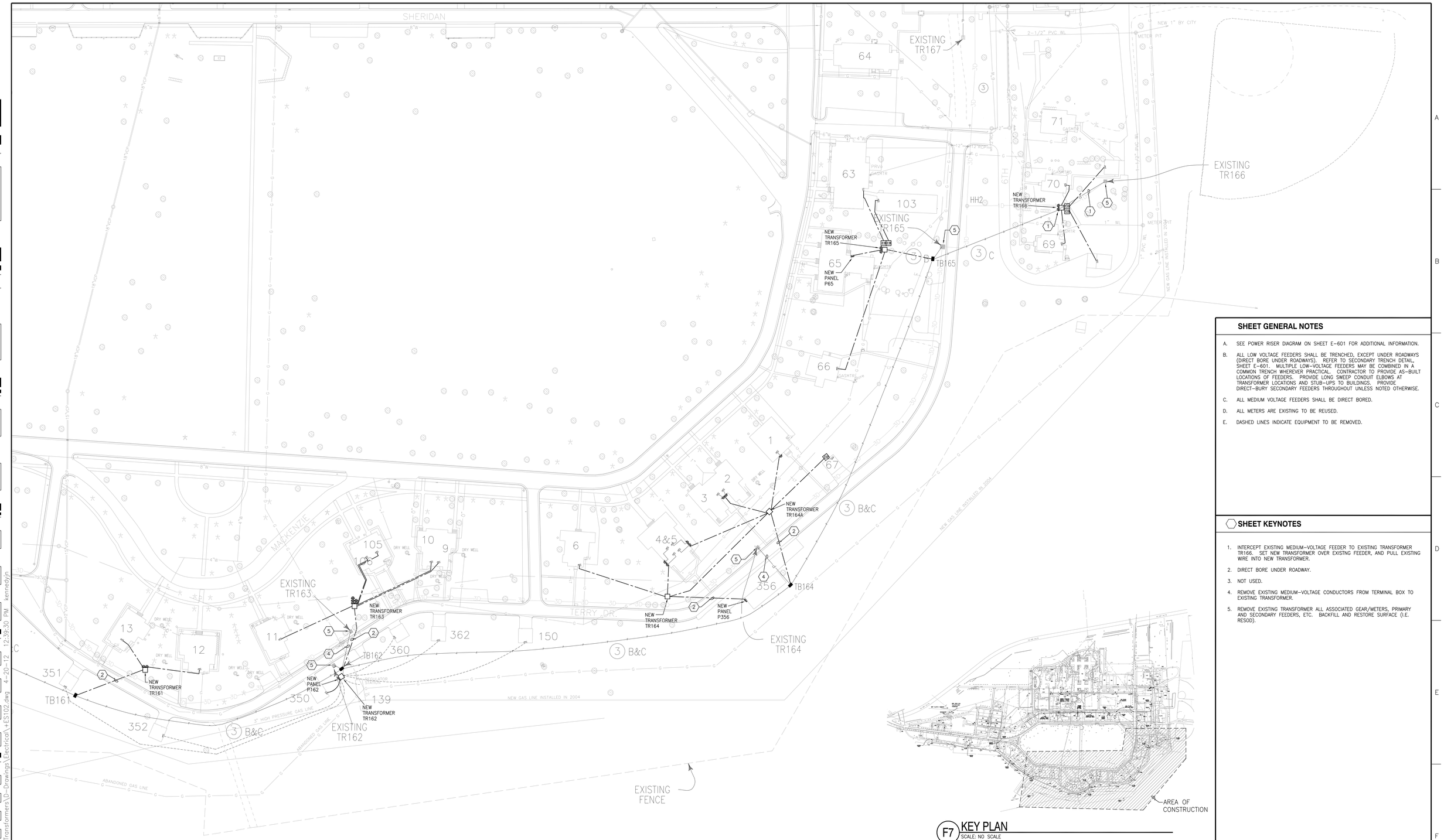

F2 ELECTRICAL SITE PLAN - EAST
SCALE: 1" = 60'-0"

PLAN NORTH

F7 KEY PLAN
SCALE: NO SCALE

SHEET GENERAL NOTES

A. SEE POWER RISER DIAGRAM ON SHEET E-601 FOR ADDITIONAL INFORMATION.

B. ALL LOW VOLTAGE FEEDERS SHALL BE TRENCHED, EXCEPT UNDER ROADWAYS (DIRECT BORE UNDER ROADWAYS). REFER TO SECONDARY TRENCH DETAIL, SHEET E-601. MULTIPLE LOW-VOLTAGE FEEDERS MAY BE COMBINED IN A COMMON TRENCH WHEREVER PRACTICAL. CONTRACTOR TO PROVIDE AS-BUILT LOCATIONS OF FEEDERS. PROVIDE LONG SWEEP CONDUIT ELBOWS AT TRANSFORMER LOCATIONS AND STUB-UPS TO BUILDINGS. PROVIDE DIRECT-BURY SECONDARY FEEDERS THROUGHOUT UNLESS NOTED OTHERWISE.

C. ALL MEDIUM VOLTAGE FEEDERS SHALL BE DIRECT BORED.

D. ALL METERS ARE EXISTING TO BE REUSED.

E. DASHED LINES INDICATE EQUIPMENT TO BE REMOVED.

SHEET KEYNOTES

1. INTERCEPT EXISTING MEDIUM-VOLTAGE FEEDER TO EXISTING TRANSFORMER TR166. SET NEW TRANSFORMER OVER EXISTNG FEEDER, AND PULL EXISTING WIRE INTO NEW TRANSFORMER.
2. DIRECT BORE UNDER ROADWAY.
3. NOT USED.
4. REMOVE EXISTING MEDIUM-VOLTAGE CONDUCTORS FROM TERMINAL BOX TO EXISTING TRANSFORMER.
5. REMOVE EXISTING TRANSFORMER ALL ASSOCIATED GEAR/METERS, PRIMARY AND SECONDARY FEEDERS, ETC. BACKFILL AND RESTORE SURFACE (I.E. RESOD).

Revisions	Date

CONSULTANTS:

REGISTERED PROFESSIONAL ENGINEER
REG. NO. 6729
DARRELL L. BREN
DATE: 4-20-12

ARCHITECT/ENGINEERS:

TSP
To Solve. To Excel. Together.

TSP, Inc.
1112 N. West Ave.
Sioux Falls, SD 57104
phone: (605) 336-1160
fax: (605) 336-7926
www.teamtsp.com
TSP PROJECT #04111011

Drawing Title	ELECTRICAL SITE PLAN - EAST
Approved Project Director	
Project Title	UPGRADE ELECTRICAL TRANSFORMERS
Location	FORT MEADE SD
Date	04-20-12
Checked	DLB
Drawn	JNK
Project Number	568-12-110
Building Number	CAMPUS
Drawing Number	ES102
Dwg 3 of 5	

Office of Construction and Facilities Management
Department of Veterans Affairs

VA FORM 08-6231

G:\2011\04111011 Dept of VA (V23)\Upgrade Elec Transformers\D-Drawings\Electrical\ES102.dwg 4-20-12 12:39:30 PM kennedyjn
three inches = one foot
one and one half inches = one foot
one inch = one foot
three quarters inch = one foot
one half inch = one foot
three eighths inch = one foot
one quarter inch = one foot
one eighth inch = one foot

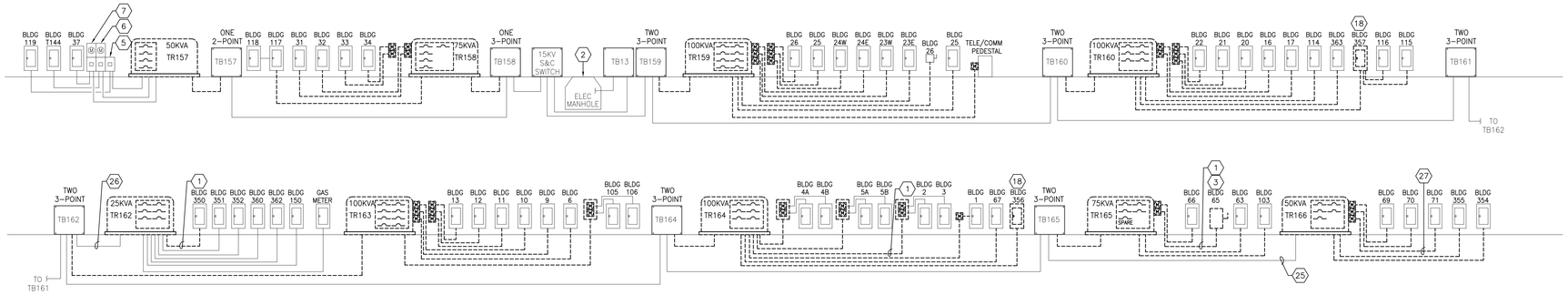

B1 ELECTRICAL POWER RISER DIAGRAM - DEMOLITION

SCALE: NO SCALE

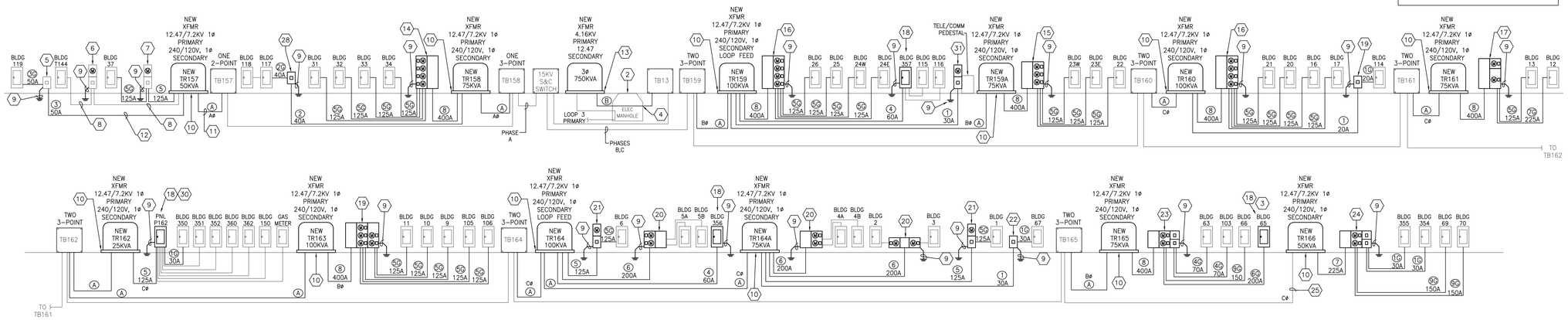

D1 ELECTRICAL POWER RISER DIAGRAM

SCALE: NO SCALE

LOW-VOLTAGE CIRCUIT SCHEDULE

- (1G) TWO #10 CU + #10 CU GND
- (1) THREE #10 CU
- (1G) THREE #10 CU + #10 CU GND
- (2) THREE #8 CU
- (2G) THREE #8 CU + #10 CU GND
- (3) THREE #6 AL
- (3G) THREE #6 AL + #10 CU GND
- (4) THREE #4 AL
- (4G) THREE #4 AL + #8 CU GND
- (5) THREE 1/0 AL
- (5G) THREE 1/0 AL + #6 AL GND
- (6) THREE 4/0 AL
- (6G) THREE 4/0 AL + #4 AL GND
- (7) THREE 250 AL
- (7G) THREE 250 AL + #4 AL GND
- (8) (2 SETS) THREE 4/0 AL
- (8G) (2 SETS) THREE 4/0 AL + #1 AL GND
- (9) THREE 2/0 AL
- (9G) THREE 2/0 AL + #6 AL GND

MEDIUM-VOLTAGE CIRCUIT SCHEDULE

- (A) ONE 1/0 15KV AL + ONE 1/0 AL GND IN 2" CONDUIT
- (B) THREE 1/0 15KV AL + ONE 2/0 CU GND

SHEET GENERAL NOTES

A. ALL LOW VOLTAGE FEEDERS SHALL BE TRENCHED, EXCEPT UNDER ROADWAYS (DIRECT BORE UNDER ROADWAYS). REFER TO SECONDARY TRENCH DETAIL, THIS SHEET. MULTIPLE LOW-VOLTAGE FEEDERS MAY BE COMBINED IN A COMMON TRENCH WHEREVER PRACTICAL. CONTRACTOR TO PROVIDE AS-BUILT LOCATIONS OF FEEDERS. PROVIDE LONG SWEEP CONDUIT ELBOWS AT TRANSFORMER LOCATIONS AND STUB-UPS TO BUILDINGS. PROVIDE DIRECT-BURY SECONDARY FEEDERS THROUGHOUT UNLESS NOTED OTHERWISE.

B. ALL MEDIUM VOLTAGE FEEDERS SHALL BE DIRECT BORED.

C. ALL METERS ARE EXISTING TO BE REUSED.

D. DASHED LINES INDICATE EQUIPMENT TO BE REMOVED.

SHEET KEYNOTES

1. REPLACE EXISTING CONCENTRIC NEUTRAL CABLES FROM TRANSFORMER TO UNIT/BUILDING.
2. EXISTING MEDIUM-VOLTAGE PRIMARY WIRING IS LOOPED IN ELECTRICAL MANHOLE PRIOR TO ENTERING TERMINAL BOX TB13. NEW 750KVA TRANSFORMER SHALL SET DIRECTLY NORTH OF MANHOLE; CORE DRILL TWO 4-INCH SLEEVES NEAR TOP OF MANHOLE WALL FOR CABLING. DISCONNECT EXISTING MV CABLE, ONE PHASE AT A TIME, FROM TB13 AND TERMINATE ON NEW 750KVA TRANSFORMER. COORDINATE PHASING WITH OWNER TO MINIMIZE DOWN-TIME. SEAL NEW CONDUIT SLEEVES. REFER TO DETAIL E1, THIS SHEET.
3. REMOVE FUSED DISCONNECTS ON EXTERIOR OF BUILDING 65 AND REPLACE WITH NEW PANELBOARD P65. SEE PANEL SCHEDULE ON SHEET E-602 FOR ADDITIONAL INFORMATION. EXTEND FEEDERS OUT OF PANEL P65 TO EXISTING LOADS.
4. NEW 15KV CABLING FROM 750KVA TRANSFORMER TO TB13 SHALL BE ROUTED THROUGH EXISTING CONDUIT SLEEVES THAT RUN BETWEEN MANHOLE AND TB13.
5. REUSE EXISTING 2-POLE FUSED DISCONNECT. MOUNT ON SIDE OF BUILDING 119.
6. REUSE EXISTING 2-POLE FUSED DISCONNECT AND METER SOCKET. MOUNT ON SIDE OF BUILDING T144. REUSE EXISTING METER.
7. REUSE EXISTING 2-POLE FUSED DISCONNECT AND METER SOCKET. MOUNT ON SIDE OF BUILDING 37. REUSE EXISTING METER.
8. INTERCEPT EXISTING 200A FEEDER TO BUILDING T144. SET NEW TRANSFORMER T157 OVER EXISTING FEEDER TO T144. PULL CABLE INTO NEW TRANSFORMER.
9. REFERENCE ELECTRICAL GROUNDING DETAIL, THIS SHEET.
10. REFERENCE TRANSFORMER PAD AND TRANSFORMER GROUNDING DETAILS, THIS SHEET.
11. ALL PRIMARY MEDIUM-VOLTAGE CALBES SHALL BE DIRECTLY BORED. TYPICAL OF ALL MEDIUM-VOLTAGE UNDERGROUND INSTALLATIONS UNLESS NOTED OTHERWISE.
12. REFERENCE SECONDARY TRENCH DETAIL, THIS SHEET. TYPICAL OF ALL LOW-VOLTAGE UNDERGROUND INSTALLATIONS UNLESS NOTED OTHERWISE.
13. STEP-UP TRANSFORMER (TEMPORARY) TO SIT ON FIBERGLASS BASE.
14. PROVIDE NEW 120/240V, 1-PHASE, 3-WIRE, 42KAIC METER CENTER WITH 400A MAIN BUS SECTION, FOUR 125A METER SOCKETS WITH 125A/2-POLE TENANT BREAKERS, AND LEVER BYPASS. METERS TO BE PROVIDED PER SPECIFICATIONS. METER CENTER TO BE MOUNTED ADJACENT TO TRANSFORMER ON SAME PAD. PROVIDE UNISTRUT SUPPORT.
15. PROVIDE NEW 120/240V, 1-PHASE, 3-WIRE, 42KAIC METER CENTER WITH 400A MAIN BUS SECTION, THREE 125A METER SOCKETS WITH 125A/2-POLE TENANT BREAKERS, AND LEVER BYPASS. METERS TO BE PROVIDED PER SPECIFICATIONS. METER CENTER TO BE MOUNTED ADJACENT TO TRANSFORMER ON SAME PAD. PROVIDE UNISTRUT SUPPORT.
16. PROVIDE NEW 120/240V, 1-PHASE, 3-WIRE, 42KAIC METER CENTER WITH 400A MAIN BUS SECTION, FOUR 125A METER SOCKETS WITH 125A/2-POLE TENANT BREAKERS, AND LEVER BYPASS. REUSE EXISTING METERS. METER CENTER TO BE MOUNTED ADJACENT TO TRANSFORMER ON SAME PAD. PROVIDE UNISTRUT SUPPORT.
17. PROVIDE NEW 120/240V, 1-PHASE, 3-WIRE, 42KAIC METER CENTER WITH 400A MAIN BUS SECTION, ONE 125A AND ONE 225A METER SOCKETS, ONE 125A/2-POLE AND ONE 225A/2-POLE TENANT BREAKERS, AND LEVER BYPASS. REUSE EXISTING METERS. METER CENTER TO BE MOUNTED ADJACENT TO TRANSFORMER ON SAME PAD. PROVIDE UNISTRUT SUPPORT.
18. PROVIDE NEW PANELBOARD. SEE SHEET E-602 FOR ADDITIONAL INFORMATION.
19. PROVIDE NEW 120/240V, 1-PHASE, 3-WIRE, 42KAIC METER CENTER WITH 400A MAIN BUS ECTION, FIVE 125A METER SOCKETS WITH 125A/2-POLE TENANT BREAKERS, AND LEVER BYPASS. REUSE EXISTING METERS. METER CENTER TO BE MOUNTED ADJACENT TO TRANSFORMER. PROVIDE UNISTRUT SUPPORT.
20. PROVIDE NEW 120/240V, 1-PHASE, 3-WIRE, 42KAIC METER CENTER WITH 400A MAIN BUS SECTION, TWO 125A METER SOCKETS WITH 125A/2-POLE TENANT BREAKERS, AND LEVER BYPASS. MOUNT ON SIDE OF BUILDING. REUSE EXISTING METERS.
21. PROVIDE NEW 120/240V, 1-PHASE, 3-WIRE, 42KAIC METER CENTER WITH 400A MAIN BUS SECTION, ONE 125A METER SOCKET WITH 125A/2-POLE TENANT BREAKER, AND LEVER BYPASS. MOUNT ON SIDE OF BUILDING. REUSE EXISTING METER.
22. PROVIDE 30A, 2-POLE 25KAIC ENCLOSED CIRCUIT BREAKER IN NEMA 3R ENCLOSURE. MOUNT ON SIDE OF BUILDING.
23. PROVIDE NEW 120/240V, 1-PHASE, 3-WIRE, 42KAIC METER CENTER WITH 400A MAIN BUS SECTION, ONE 125A AND ONE 225A METER SOCKETS, ONE 125A/2-POLE AND ONE 200A/2-POLE BREAKERS, AND LEVER BYPASS. ALSO PROVIDE TWO 70A/2-POLE BREAKERS, NEMA 3R, TO FEED BUILDINGS 63 AND 103. METER CENTER/BREAKERS TO BE MOUNTED ADJACENT TO TRANSFORMER ON SAME PAD. PROVIDE UNISTRUT SUPPORT.
24. PROVIDE NEW 120/240V, 1-PHASE, 3-WIRE, 42KAIC METER CENTER WITH 400A MAIN BUS SECTION, TWO 225A METER SOCKETS, TWO 150A/2-POLE TENANT BREAKERS, AND LEVER BYPASS. ALSO PROVIDE TWO 30A/2-POLE BREAKERS, NEMA 3R, TO FEED BUILDINGS 354 AND 355. METER CENTER/BREAKERS TO BE MOUNTED ADJACENT TO TRANSFORMER ON SAME PAD. PROVIDE UNISTRUT SUPPORT.
25. INTERCEPT EXISTING MEDIUM-VOLTAGE CABLE TO EXISTING TRANSFORMER TR166 TO FEED NEW TRANSFORMER TR166.
26. INTERCEPT EXISTING MEDIUM-VOLTAGE CABLE TO EXISTING TRANSFORMER TR162 TO FED NEW TRANSFORMER TR162.
27. BUILDING 71 IS ABANDONED. REMOVE FEEDER.
28. PROVIDE 40A, 2-POLE ENCLOSED CIRCUIT BREAKER IN NEMA-3R ENCLOSURE.
29. PROVIDE 20A, 2-POLE ENCLOSED CIRCUIT BREAKER IN NEMA-3R ENCLOSURE.
30. NEW PANEL P162 TO BE MOUNTED ON UNISTRUT SUPPORT AND SHARE PAD WITH TR162. INTERCEPT EXISTING PANEL FEEDERS, EXTEND AS NEEDED.
31. PROVIDE NEW 120/240V, 1-PHASE, 3-WIRE, 42KAIC METER CENTER WITH 30A, 2-POLE BREAKER (SERVICE ENTRANCE RATED), AND LEVER BYPASS. METER CENTER TO BE INSTALLED ON SIDE OF EXISTING TELE/COMM PEDESTAL.

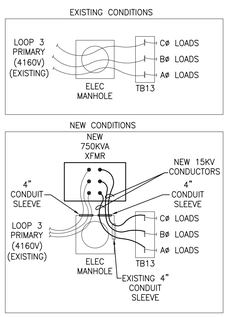

E1 MEDIUM VOLTAGE TRANSITION AT TB13

SCALE: NO SCALE

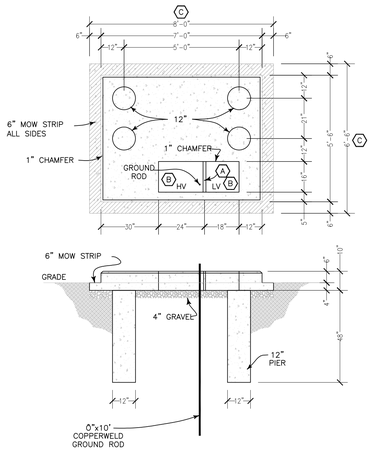

Ⓐ – 2" x 8" REDWOOD LUMBER ON EDGE AS BARRIER BETWEEN LV & HV COMPARTMENTS.

Ⓑ – SIZE MEDIUM- AND LOW-VOLTAGE COMPARTMENTS ACCORDINGLY WITH CORRESPONDING TRANSFORMER SIZE.

Ⓒ – OVERALL DIMENSIONS OF TRANSFORMER PAD SHALL CORRESPOND WITH ASSOCIATED TRANSFORMER SIZE. PAD SHALL ALSO ACCOMMODATE METER CENTER, WHERE APPLICABLE. MAINTAIN 6" CLEARANCE AROUND TRANSFORMER AND 12" MINIMUM CLEARANCE TO OUTER EDGE OF MOW STRIP.

NOTE:

USE 3000 LB./SQ. INCH TEST CONCRETE. USE 1/2" REBAR FOR REINFORCING. RODS ARE TO BE SPACED 3" BELOW TOP OF PAD. RODS ARE TO HAVE 3" OF COVER ON OUTSIDE EDGE OF PAD. RODS ARE NOT TO EXCEED 12" SPACING. BED PAD ON 4" OF GRAVEL.

VERTICAL PIERS ARE TO BE REINFORCED WITH 1/2" REBAR AND TIED TO THE PAD REBARS.

E2 TRANSFORMER PAD DETAIL

SCALE: NO SCALE

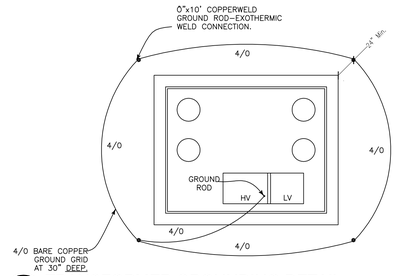

E5 TRANSFORMER GROUNDING DETAIL

SCALE: NO SCALE

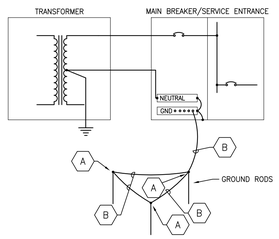

KEYNOTES

A. CONNECT GROUNDING ELECTRODE CONDUCTOR TO GROUND ROD WITH GROUND CONNECTOR.

B. #6 AWG BARE COPPER CONDUCTOR.

F5 ELECTRICAL GROUNDING DETAIL

SCALE: NO SCALE

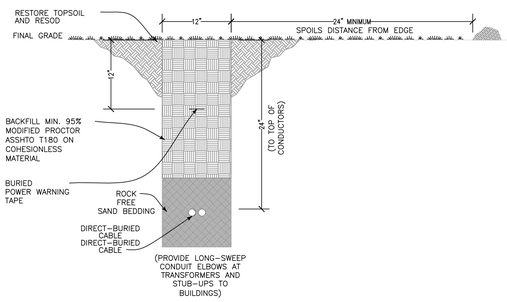

F6 SECONDARY TRENCH DETAIL

SCALE: NO SCALE

CONSULTANTS:

Revisions: Date

REGISTERED PROFESSIONAL ENGINEER REG. NO. 6729 DARRELL L. BREN DATE: 4-20-12

ARCHITECT/ENGINEERS:

TSP, Inc.
1112 N. West Ave.
Sioux Falls, SD 57104
phone: (605) 336-1160
fax: (605) 336-7926
www.teamtsp.com
TSP PROJECT #04111011

To Solve. To Excel. Together.

Drawing Title: POWER RISER DIAGRAM	Project Title: UPGRADE ELECTRICAL TRANSFORMERS		Project Number: 568-12-110
Approved: Project Director			Building Number: CAMPUS
	Location: FORT MEADE SD		Drawing Number: E-601
	Date: 04-20-12	Checked: DLB / Drawn: JNK	Dwg. 4 of 5

Office of Construction and Facilities Management

Department of Veterans Affairs

VA FORM 08-6231

G:\2011\04111011 Dept of VA (V23) Upgrade Elec Transformers\D-Drawings\Electrical\E-601.dwg 4-20-12 12:37:59 PM kennedyjn

PANEL TAG: P65
MOUNTING: SURFACE
FEEDER: SEE RISER
PANEL TYPE: LIGHTING & APPLIANCE

VOLTAGE: 120/240 VAC, 1-PHASE, 3-WIRE
MAINS: LUG [x] C.B. [ ] AMPS: 200
FEED THRU LUG [ ]
MIN A.I.C.: 14,800 (A)

CKT	ITEM OR AREA SERVED	O/C PROT	DIST KVA	P	DIST KVA	O/C PROT	ITEM OR AREA SERVED	CKT
1	EXISTING LOAD	125/2	0.0	A	0.0	20/1	SPARE	2
3			0.0	C	0.0	20/1	SPARE	4
5	EXISTING LOAD	100/2	0.0	A	0.0	20/1	SPARE	6
7			0.0	C	0.0	20/1	SPARE	8
9	EXISTING LOAD	60/2	0.0	A	0.0	20/1	SPARE	10
11			0.0	C	0.0	20/1	SPARE	12
13			0.0	A	0.0			14
15			0.0	C	0.0			16
17			0.0	A	0.0			18
19			0.0	C	0.0			20
21			0.0	A	0.0			22
23			0.0	C	0.0			24
25			0.0	A	0.0			26
27			0.0	C	0.0			28
29			0.0	A	0.0			30

TOTAL CONNECTED LOAD (KVA) 0.0
TOTAL DEMAND LOAD (KVA) 0.0
FEEDER AMPERES DEMAND 0.0

***PROVIDE LOCKABLE NEMA-3R ENCLOSURE

PANEL TAG: P162
MOUNTING: SURFACE
FEEDER: SEE RISER
PANEL TYPE: LIGHTING & APPLIANCE

VOLTAGE: 120/240 VAC, 1-PHASE, 3-WIRE
MAINS: LUG [X] C.B. [ ] AMPS: 200
FEED THRU LUG [ ]
MIN A.I.C.: 7,400 (A)

CKT	ITEM OR AREA SERVED	O/C PROT	DIST KVA	P	DIST KVA	O/C PROT	ITEM OR AREA SERVED	CKT
1	BUILDING 351	30/2	0.0	A	0.0	30/2	BUILDING 360	2
3			0.0	C	0.0			4
5	BUILDING 352	30/2	0.0	A	0.0	30/2	BUILDING 362	6
7			0.0	C	0.0			8
9	BUILDING 350	30/2	0.0	A	0.0	30/2	BUILDING 150	10
11			0.0	C	0.0			12
13	GAS METER	20/1*	0.0	A	0.0	20/1*	SPARE	14
15	SPARE	20/1*	0.0	C	0.0	20/1*	SPARE	16
17	SPARE	20/1*	0.0	A	0.0	20/1*	SPARE	18
19			0.0	C	0.0			20
21			0.0	A	0.0			22
23			0.0	C	0.0			24
25			0.0	A	0.0			26
27			0.0	C	0.0			28
29			0.0	A	0.0			30

TOTAL CONNECTED LOAD (KVA) 0.0
TOTAL DEMAND LOAD (KVA) 0.0
FEEDER AMPERES DEMAND 0.0

* PROVIDE 4-6mA GFCI CIRCUIT BREAKER
** PROVIDE LOCKABLE NEMA-3R ENCLOSURE

PANEL TAG: P357
MOUNTING: SURFACE
FEEDER: SEE RISER
PANEL TYPE: LIGHTING & APPLIANCE

VOLTAGE: 120/240 VAC, 1-PHASE, 3-WIRE
MAINS: LUG [ ] C.B. [X] AMPS: 60
FEED THRU LUG [ ]
MIN A.I.C.: 14,800 (A)

CKT	ITEM OR AREA SERVED	O/C PROT	DIST KVA	P	DIST KVA	O/C PROT	ITEM OR AREA SERVED	CKT
1	EXISTING LOAD	20/1*	0.0	A	0.0	20/1*	EXISTING LOAD	2
3	EXISTING LOAD	20/1*	0.0	C	0.0	20/1*	EXISTING LOAD	4
5	EXISTING LOAD	20/1*	0.0	A	0.0	20/1*	EXISTING LOAD	6
7	EXISTING LOAD	20/1*	0.0	C	0.0	20/1*	EXISTING LOAD	8
9	EXISTING LOAD	20/1*	0.0	A	0.0	20/1*	EXISTING LOAD	10
11	EXISTING LOAD	20/1*	0.0	C	0.0	20/1*	EXISTING LOAD	12
13	SPARE	20/1*	0.0	A	0.0	20/1*	SPARE	14
15	SPARE	20/1*	0.0	C	0.0	20/1*	SPARE	16
17	SPACE		0.0	A	0.0		SPACE	18
19	SPACE		0.0	C	0.0		SPACE	20
21	SPACE		0.0	A	0.0		SPACE	22
23	SPACE		0.0	C	0.0		SPACE	24
25	SPACE		0.0	A	0.0		SPACE	26
27	SPACE		0.0	C	0.0		SPACE	28
29	SPACE		0.0	A	0.0		SPACE	30

TOTAL CONNECTED LOAD (KVA) 0.0
TOTAL DEMAND LOAD (KVA) 0.0
FEEDER AMPERES DEMAND 0.0

* PROVIDE 4-6mA GFCI CIRCUIT BREAKER
** PANEL SHALL BE SERVICE-ENTRANCE RATED
***PROVIDE LOCKABLE NEMA-3R ENCLOSURE

PANEL TAG: P356
MOUNTING: SURFACE
FEEDER: SEE RISER
PANEL TYPE: LIGHTING & APPLIANCE

VOLTAGE: 120/240 VAC, 1-PHASE, 3-WIRE
MAINS: LUG [ ] C.B. [X] AMPS: 60
FEED THRU LUG [ ]
MIN A.I.C.: 14,800 (A)

CKT	ITEM OR AREA SERVED	O/C PROT	DIST KVA	P	DIST KVA	O/C PROT	ITEM OR AREA SERVED	CKT
1	EXISTING LOAD	20/1*	0.0	A	0.0	20/1*	EXISTING LOAD	2
3	EXISTING LOAD	20/1*	0.0	C	0.0	20/1*	EXISTING LOAD	4
5	EXISTING LOAD	20/1*	0.0	A	0.0	20/1*	EXISTING LOAD	6
7	EXISTING LOAD	20/1*	0.0	C	0.0	20/1*	EXISTING LOAD	8
9	EXISTING LOAD	20/1*	0.0	A	0.0	20/1*	EXISTING LOAD	10
11	EXISTING LOAD	20/1*	0.0	C	0.0	20/1*	EXISTING LOAD	12
13	SPARE	20/1*	0.0	A	0.0	20/1*	SPARE	14
15	SPARE	20/1*	0.0	C	0.0	20/1*	SPARE	16
17	SPACE		0.0	A	0.0		SPACE	18
19	SPACE		0.0	C	0.0		SPACE	20
21	SPACE		0.0	A	0.0		SPACE	22
23	SPACE		0.0	C	0.0		SPACE	24
25	SPACE		0.0	A	0.0		SPACE	26
27	SPACE		0.0	C	0.0		SPACE	28
29	SPACE		0.0	A	0.0		SPACE	30

TOTAL CONNECTED LOAD (KVA) 0.0
TOTAL DEMAND LOAD (KVA) 0.0
FEEDER AMPERES DEMAND 0.0

* PROVIDE 4-6mA GFCI CIRCUIT BREAKER
** PANEL SHALL BE SERVICE-ENTRANCE RATED
***PROVIDE LOCKABLE NEMA-3R ENCLOSURE

Revisions: Date

CONSULTANTS:

REGISTERED PROFESSIONAL ENGINEER
REG. NO. 6729
DARRELL L. BREN
DATE: 4-20-12

ARCHITECT/ENGINEERS:

TSP, Inc.
1112 N. West Ave.
Sioux Falls, SD 57104
phone: (605) 336-1160
fax: (605) 336-7926
www.teamtsp.com
TSP PROJECT #04111011
To Solve. To Excel. Together.

Drawing Title: ELECTRICAL SCHEDULES
Approved: Project Director
Project Title: UPGRADE ELECTRICAL TRANSFORMERS
Location: FORT MEADE SD
Date: 04-20-12
Checked: DLB
Drawn: JNK
Project Number: 568-12-110
Building Number: CAMPUS
Drawing Number: E-602
Dwg 5 of 5

Office of Construction and Facilities Management
Department of Veterans Affairs

VA FORM 08-6231

G:\2011\04111011 Dept of VA (V23)_Upgrade Elec Transformers\D-Drawings\Electrical\E-602.dwg 4-20-12 12:38:27 PM kennedyjn