Project Number : 552-CSI-101
OPEN MRI SITE PREP
4100 WEST THIRD STREET
DAYTON, OH 45428

PREPARED FOR:
DEPARTMENT OF VETERANS AFFAIRS
DAYTON VAMC
4100 WEST THIRD STREET
DAYTON, OH 45428

PREPARED BY:
DYNAMIX ENGINEERING LTD.
855 GRANDVIEW AVENUE
COLUMBUS, OH 43215

LOCATION MAP

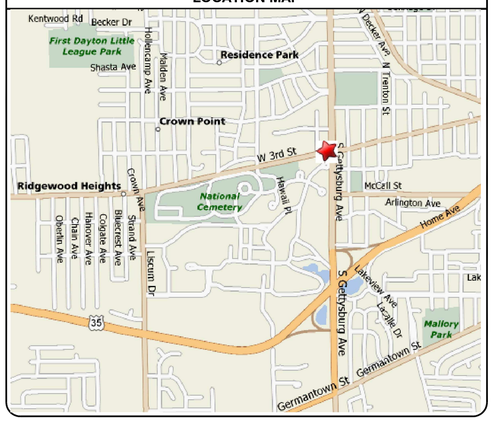

SCHEDULE OF DRAWINGS

DRAWING NO.	TITLE
1	COVER PAGE
GS0-01	SITE SURVEY
GS0-02	DEMOLITION PLAN
GS1-01	STAKING PLAN
GS2-01	GRADING PLAN
GS2-02	STORM PROFILES
GS2-03	SEDIMENT & EROSION CONTROL PLAN
~~GS2-04~~	~~SEDIMENT & EROSION CONTROL NOTES~~
GS2-05	DETAILED GRADING
~~GS3-01~~	~~UTILITY PLAN~~
GS3-02	SANITARY AND WATER PROFILES
GS3-03	UTILITY PROFILES
GS4-01	SITE DETAILS
GS4-02	SITE DETAILS
~~GS4-03~~	~~SITE DETAILS~~
GS4-04	DETAILS
GS4-05	DETAILS
S1-01	GENERAL STRUCTURAL NOTES
S2-01	FOUNDATION PLAN
S3-01	FOUNDATION DETAILS
S3-02	FOUNDATION PIERS
S3-03	GRADE BEAM SCHEDULE
S4-01	ROOF FRAMING PLAN
S5-01	FRAMING DETAILS
S5-02	FRAMING DETAILS
S5-03	FRAMING DETAILS
L1	LEGEND
LS-01	LIFE SAFETY FLOOR PLAN
KDP-01	KEY DIMENSION PLAN, DEMOLITION PLAN, NEW PLAN
A1-01	PARTIAL FLOOR PLAN
A1-02	PARTIAL REFLECTED CEILING PLAN
A1-03	PARTIAL FLOOR PLAN
A1-04	PARTIAL REFLECTED CEILING PLAN
A1-05	ROOF PLAN
A2-01	EXTERIOR ELEVATIONS
A2-02	BUILDING SECTIONS & WALL SECTIONS
A2-03	BUILDING SECTIONS & WALL SECTIONS
A3-01	EXTERIOR DETAILS
A3-02	EXTERIOR DETAILS
A3-03	EXTERIOR DETAILS
A3-04	EXTERIOR DETAILS
A4-01	TYPICAL HOLLOW METAL DETAILS & BORROWED LIGHTS
A5-01	CASEWORK ELEVATIONS & INTERIOR ELEVATIONS
A5-02	CASEWORK ELEVATIONS & INTERIOR ELEVATIONS
A5-03	CASEWORK ELEVATIONS & INTERIOR ELEVATIONS
A5-04	CASEWORK DETAILS
A5-05	CASEWORK ELEVATIONS & INTERIOR ELEVATIONS
A6-01	TYPICAL MOUNTING HEIGHTS
A6-02	STANDARD CEILING DETAILS
A6-03	INTERIOR DETAILS
A6-04	INTERIOR DETAILS
A6-05	INTERIOR DETAILS
A6-06	INTERIOR DETAILS
A7-01	PARTIAL FLOOR FINISH PLAN
A7-02	PARTIAL FLOOR FINISH PLAN
FP1-01	FIRST FLOOR FIRE PROTECTION PLAN
P0-00	PLUMBING SCHEDULES AND DETAILS
P1-01	FIRST FLOOR PLUMBING PLAN
M0-00	MECHANICAL SCHEDULES AND DETAILS
M0-01	MECHANICAL SCHEDULES AND DETAILS
M0-02	MECHANICAL SCHEDULES AND DETAILS
M0-03	MECHANICAL SCHEDULES AND DETAILS
M1-01	FIRST FLOOR HVAC PLAN
M1-02	FIRST FLOOR HVAC PIPING PLAN
M1-03	ROOF HVAC PLAN
E0-00	ELECTRICAL SCHEDULES AND DETAILS
E0-01	ELECTRICAL SITE PLAN
E1-01	FIRST FLOOR LIGHTING PLAN
E1-02	FIRST FLOOR POWER PLAN
E1-03	FIRST FLOOR SYSTEMS PLAN
~~E1-04~~	~~BASEMENT ELECTRICAL PLAN~~
E1-05	ROOF ELECTRICAL PLAN
~~E3-00~~	~~ELECTRICAL SINGLE LINE DIAGRAM~~

DESIGNER/ENGINEER SH
CAD OPERATOR MB
QAQC/CHECKER DL

Revisions	Date
ISSUED FOR BID	02/28/2012
PRE-BID AMENDMENT, REV 1	04/26/2012
PRE-BID AMENDMENT	05/10/2012

Dynamix Engineering Ltd.
Facility Engineering Consultants
855 Grandview Avenue, Third Floor Columbus, Ohio 43215
Phone: (614)443-1178 · Fax: (614)443-1594 · Email: dynamix@dynamix-ltd.com
Comm. No.: 110028

STATE OF OHIO · MACE E-50556 · MONTGOMERY E-66852 · GRIFFIN E-57049 · REGISTERED PROFESSIONAL ENGINEER
Professional Seal

Revised By:

Drawing Title: TITLE SHEET	Project Title: OPEN MRI SITE PREP
Approved: Project Manager: RANDI FIORINA	Building Number: 335 · Checked: DYNAMIX · Drawn: MCB
Approved: Service Chief: GARY ABREU	Location: 4100 WEST THIRD STREET DAYTON, OH 45428

Date: 02-28-2012
Project No. 552-CSI-101
Drawing No. 1

VAMC, DAYTON
VA Department of Veterans Affairs

VA FORM 08-6231, OCT 1978

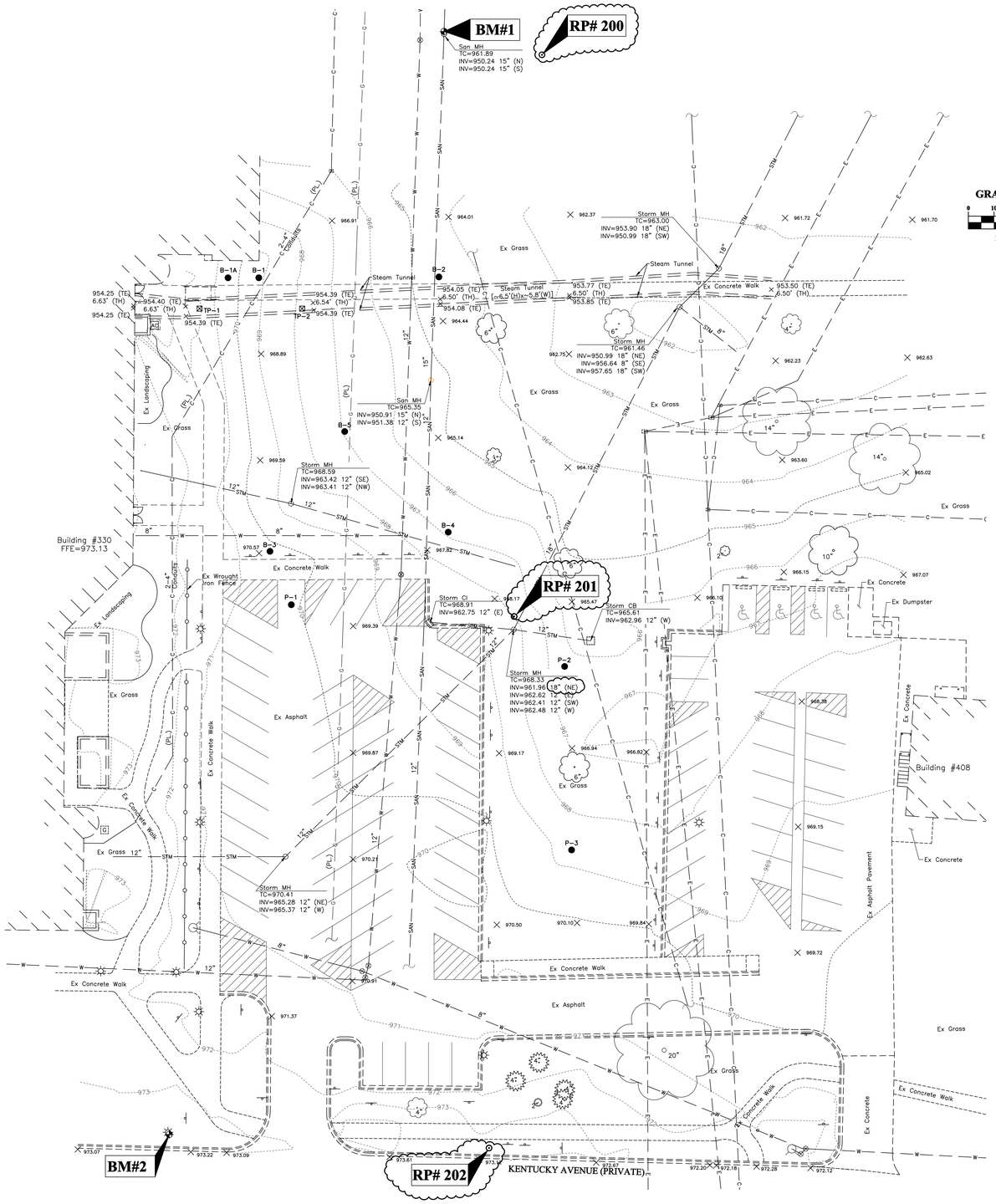

GRAPHIC SCALE

0 10 20 40

1 inch = 20 feet

LEGEND

- Horizontal Survey Control Point, Refer to Table
- Building
- Curb and Gutter
- Sidewalk
- Edge of Pavement
- Waterline
- Valve
- Fire Hydrant
- Sanitary Sewer
- Sanitary Manhole
- Storm Sewer
- Storm Manhole
- Storm Catch Basin
- Storm Curb Inlet
- Underground Communications
- Communications Manhole
- Underground Electric
- Electric Manhole
- AC Unit
- Light Pole
- Gas Meter
- Sign
- Bollard
- Trees
- Benchmark
- Existing Wrought Iron Fence
- Gas Main
- Steam Tunnel
- 970.50 Ex Spot Elevation
- 6.50' (TH) Inside Tunnel Height
- 954.05 (TE) Tunnel Floor Slab Elevation
- Soil Boring
- Test Pit
- 969 Contour
- (PL) Utility Located Based on Plan, Refer to General Notes
- Parking Block

HORIZONTAL CONTROL

RP #	DESCRIPTION	NORTHING	EASTING
200	IRS with cap Iron Rebar with Cap Set	639756.1840	1472727.0100
201	IRS with cap Iron Rebar with Cap Set	639537.1340	1472716.1650
202	IRS with cap Iron Rebar with Cap Set	639329.8560	1472706.3780

BENCH MARKS

All bench marks and elevations shown upon this plan are based on the (NAVD88) North American Vertical Datum of 1988.

BM #	DESCRIPTION	NORTHING	EASTING	ELEVATION
1	Chiseled X on north rim of sanitary manhole located 85 feet northeast of the northeast corner of the existing building and 100 feet north of north edge of concrete sidewalk.	639765.28	1472688.82	961.89
2	Chiseled square on the southeast corner of concrete light pole base located on the northeast corner of Kentucky Drive and entrance to lot "A".	639335.12	1472581.68	973.89

Notes

1. Refer to Geotechnical Report by CTL Engineering, Inc. dated February 9, 2012. Soil boring numbers and locations shown on this plan represent borings in report.
2. Communication line adjacent to building located based on an email provided by Mark Permelia of the Department of Veteran Affairs Medical Center, Dayton, Ohio, dated December 14, 2011.
3. Gas line shown located based on plan provided by the Department of Veteran Affairs Medical Center, Dayton, Ohio, prepared by Schaeffer Engineering dated May 23, 2007.

DESIGNER/ENGINEER
CAD OPERATOR
QAQC/CHECKER

Revisions	Date
Issued For Bid	02/28/2012
Pre Bid Amendment	05/10/2012

EMH&T
Evans, Mechwart, Hambleton & Tilton, Inc.
Engineers • Surveyors • Planners • Scientists
5500 New Albany Road, Columbus, OH 43054
Phone: 614.775.4500 Toll Free: 888.775.3648
emht.com

STATE OF OHIO
CHRISTOPHER M. FLEMING
E-64019
REGISTERED PROFESSIONAL ENGINEER
Professional Seal

Revised By:

Drawing Title	Project Title	Date
SITE SURVEY	OPEN MRI SITE PREP	02/28/2012
Approved: Project Manager: MARK PERMELIA	Building Number: 335	Checked: EMH&T / Drawn: MJF
Approved: Service Chief: GARY ABREU	Location: 4100 WEST THIRD STREET DAYTON, OH 45428	Project No. 552-CSI-101
		Drawing No. GS0-01

VAMC, DAYTON
VA Department of Veterans Affairs

VA FORM 08-6231, OCT 1978

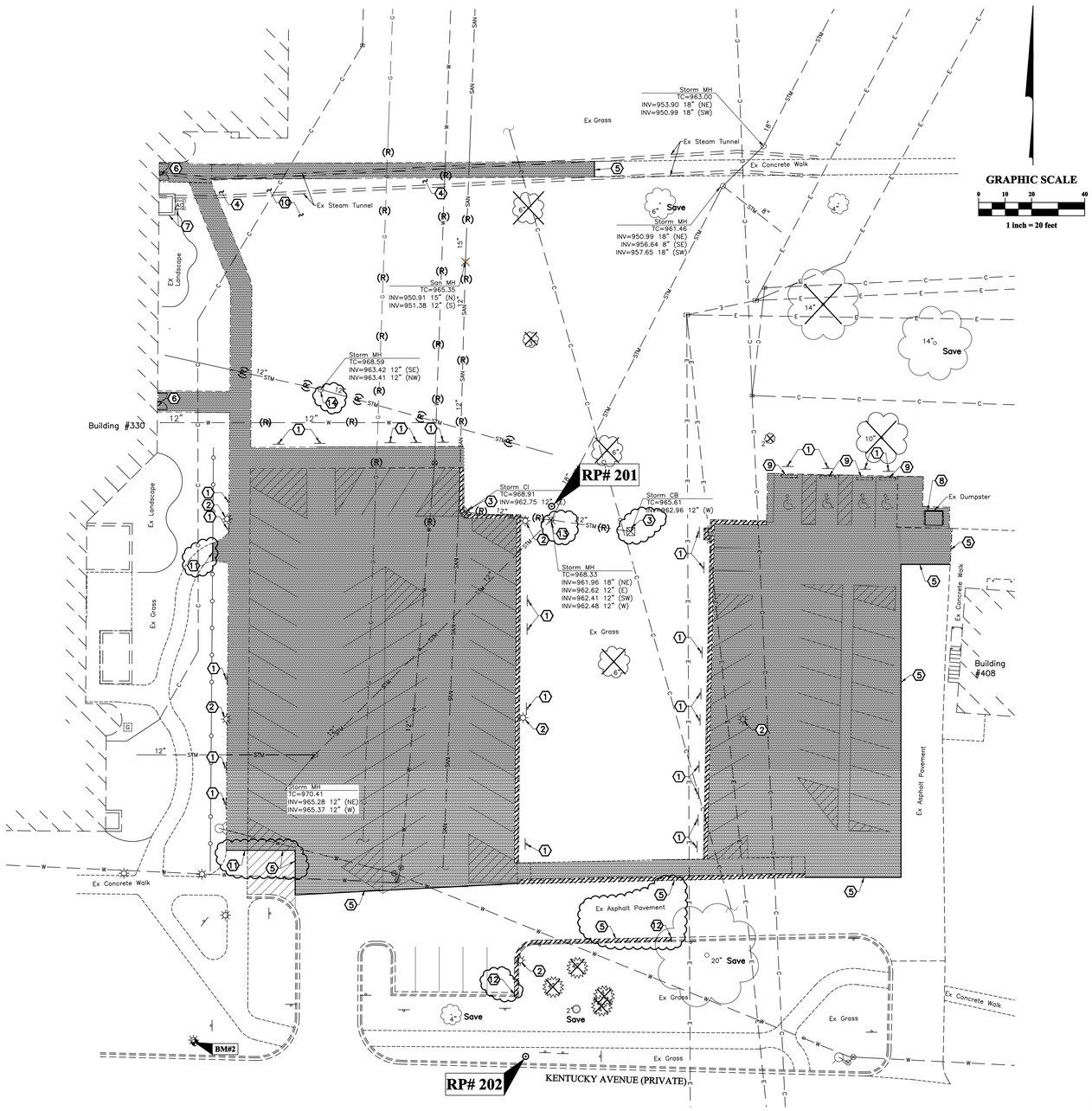

GENERAL NOTES

1. All dimensions are from face of building, edge of walk, edge of pavement, or face of curb, unless otherwise noted.
2. Dispose all items to be removed off-site in accordance with federal, state, and local codes.
3. Existing granular pavement base materials may be used as new pavement base and fill material, if approved by the Testing Agency.
4. Backfill all excavations in accordance with specification section 31 20 00.
5. Protect all existing utilities to remain. Maintain flow and service in all utilities throughout the duration of construction.
6. If a utility shut-down is required, notify COTR in writing 2 weeks prior to beginning work. Shut down must be approved by COTR prior to performing work.
7. Protect all site features to remain. Repair any damage at no additional cost to COTR.
8. Remove concrete pavement, walks and curb and gutter to nearest joint beyond the limits of demolition.
9. Refer to Staking Plan for limits of removal/improvements. Refer to Utility Plan for removal limits of utilities.
10. Sawcut pavement, curbs, and walks full depth in neat, straight lines.
11. Protect survey control during construction. Provide additional control as necessary to perform construction operation.
12. Remove existing trees to a minimum of 2'-0" below existing grade or 2'-0" below proposed subgrade, whichever is deeper, where complete tree removal is indicated.
13. Provide ADA compliant parking spaces and accessible ways throughout construction. Coordinate location of spaces with COTR. Provide ~~temporary striping as~~ necessary.
14. Utilize existing parking lot and area adjacent to new building for construction staging. Minimize impact to adjacent property. Provide staging plan to COTR for approval prior to beginning work. Obtain approvals from COTR for changes to staging plan prior to implementation.
15. Provide temporary by-pass pumping for sanitary and storm sewers as necessary to maintain service at all times during construction. By-pass pumping shall be adequately sized to provide service with no degradation to the adjacent buildings.
16. Coordinate location of material stock pile areas with COTR.
17. Refer to GS2-03 for staging areas and construction signage. Coordinate all locations with COTR.

CODED NOTES

1. Remove existing sign, post and foundation in its entirety, use care to protect sign and post during demolition. Protect and store sign with post for re-erection as directed. Coordinate final location of signs with COTR.
2. Remove light pole, fixture, luminaire, foundation and associated circuitry and conduits in its entirety. Refer to site electrical plan for additional information.
3. Remove existing inlet completely.
4. Protect existing below grade steam tunnel to remain.
5. Sawcut pavement full depth. Locate sound pavement edge and cut and trim pavement to a neat line. Limits of demolition.
6. Protect existing building during construction.
7. Remove existing area well, HVAC equipment and concrete pad. Refer to Architectural and HVAC Drawings for additional information.
8. Relocate dumpster during construction. Coordinate temporary location with COTR. Included temporary 10'x10'x8" concrete pad in bid price for work. Place dumpster such that construction does not interfere with service.
9. Remove existing concrete parking blocks. Palletize, store and replace as directed for use by COTR.
10. Existing fill soils located within this area and on top of steam tunnel. Remove all fill soils to the satisfaction of the geotechnical engineer. Replace with acceptable fill soils in accordance with specification Section 31 20 00. Refer to soils report for extent of fill soils to be removed.
11. Sawcut sidewalk full depth with neat, straight lines at nearest joint beyond work limits.
12. Sawcut concrete curb and gutter full depth.
13. Existing manhole to be removed. See Detail I, sheet GS4-01 for new manhole detail.
14. Existing storm manhole to be removed.
15. Existing sanitary manhole to be removed.

LEGEND

EXISTING

- Horizontal Survey Control Point, Refer to Table
- Building
- Curb and Gutter
- Sidewalk
- Edge of Pavement
- W — Waterline
- Valve
- Fire Hydrant
- SAN — Sanitary Sewer
- Sanitary Manhole
- STM — Storm Sewer
- Storm Manhole
- Storm Catch Basin
- Storm Curb Inlet
- C — Underground Communications
- Communications Manhole
- E — Underground Electric
- Electric Manhole
- AC — AC Unit
- Light Pole
- G — Gas Meter
- Sign
- Bollard
- Trees
- Benchmark
- Existing Wrought Iron Fence
- Parking Block
- G — Gas Main
- Steam Tunnel

PROPOSED

- (R) STM — Remove Existing Utility
- Remove Existing Pavement or Concrete Sidewalk
- Remove Existing Concrete Curb and Gutter
- Remove Existing Tree Completely
- Save — Protect Existing Tree to Remain, Per Detail A This Sheet
- STM — Remove Existing Structure

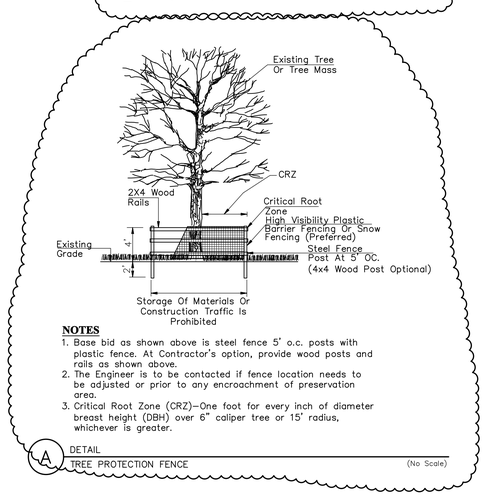

NOTES

1. Base bid as shown above is steel fence 5' o.c. posts with plastic fence. At Contractor's option, provide wood posts and rails as shown above.
2. The Engineer is to be contacted if fence location needs to be adjusted or prior to any encroachment of preservation area.
3. Critical Root Zone (CRZ)-One foot for every inch of diameter breast height (DBH) over 6" caliper tree or 15' radius, whichever is greater.

A DETAIL
TREE PROTECTION FENCE (No Scale)

HORIZONTAL CONTROL

RP #	DESCRIPTION	NORTHING	EASTING
200	3/4" Pipe with a cap stamped "EHMT"	639756.1840	1472727.0100
201	3/4" Pipe with a cap stamped "EHMT"	639537.1340	1472716.1650
202	3/4" Pipe with a cap stamped "EHMT"	639329.8560	1472706.3780

BENCH MARKS

All bench marks and elevations shown upon this plan are based on the (NAVD88) North American Vertical Datum of 1988.

BM #	DESCRIPTION	NORTHING	EASTING	ELEVATION
1	Chiseled X on north rim of sanitary manhole located 85 feet northeast of the northeast corner of the existing building and 100 feet north of north edge of concrete sidewalk.	639765.28	1472688.82	961.89
2	Chiseled square on the southeast corner of concrete light pole base located on the northeast corner of Kentucky Drive and entrance to lot "A".	639335.12	1472581.68	973.89

DESIGNER/ENGINEER
CAD OPERATOR
QAQC/CHECKER

Revisions	Date
Issued For Bid	02/28/2012
Pre Bid Amendment	05/10/2012

EMH&T
Evans, Mechwart, Hambleton & Tilton, Inc.
Engineers • Surveyors • Planners • Scientists
5500 New Albany Road, Columbus, OH 43054
Phone: 614.775.4500 Toll Free: 888.775.3648
emht.com

STATE OF OHIO
CHRISTOPHER M. FLEMING
E-64019
REGISTERED PROFESSIONAL ENGINEER
Professional Seal

Revised By:

Drawing Title: DEMOLITION PLAN
Project Title: OPEN MRI SITE PREP
Date: 02/28/2012
Project No. 552-CSI-101
Approved: Project Manager: MARK PERMELIA
Building Number: 335
Checked: EMH&T
Drawn:
Drawing No. GS0-02
Approved: Service Chief: GARY ABREU
Location: 4100 WEST THIRD STREET DAYTON, OH 45428
VAMC, DAYTON
VA Department of Veterans Affairs

VA FORM 08-6231, OCT 1978

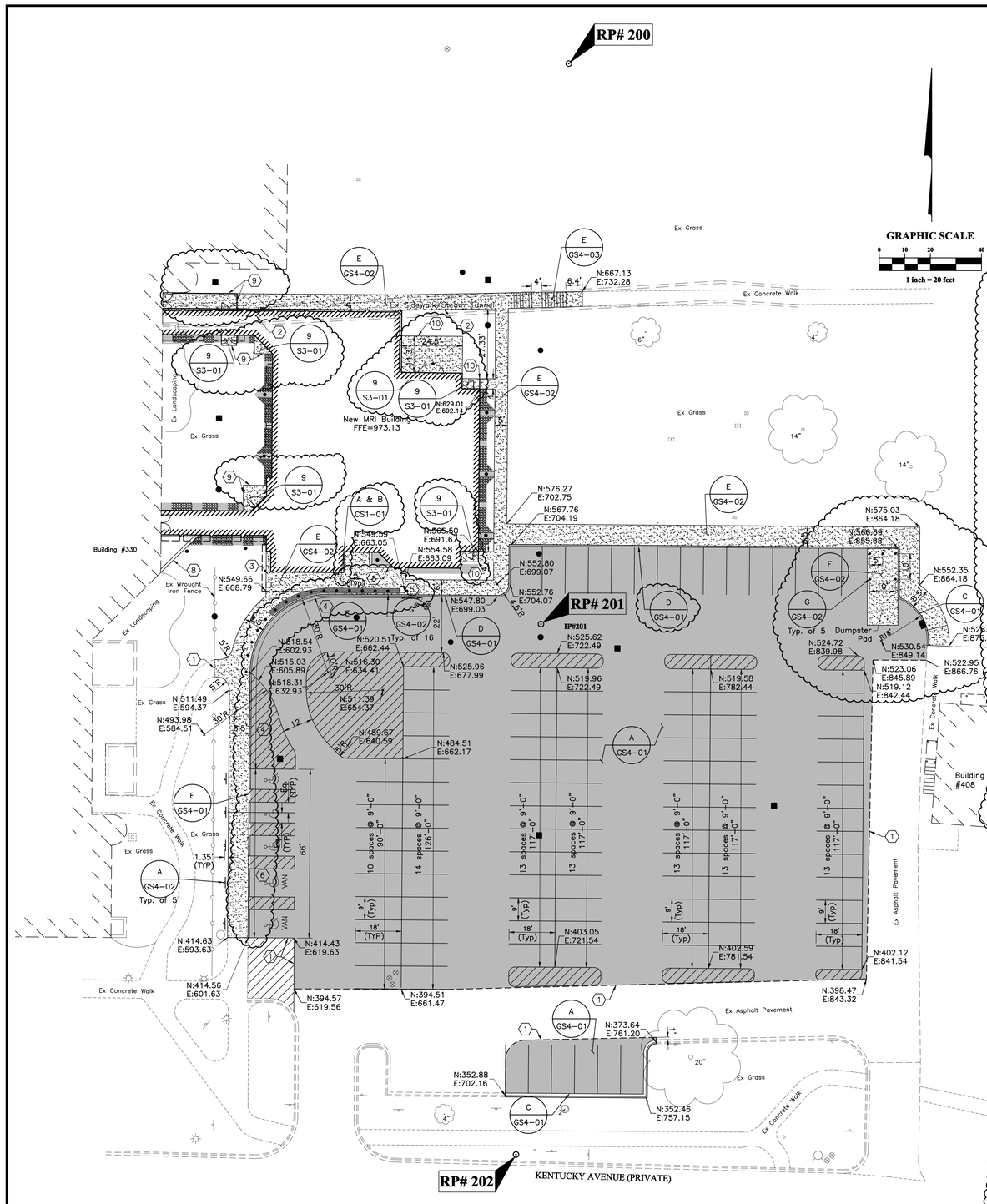

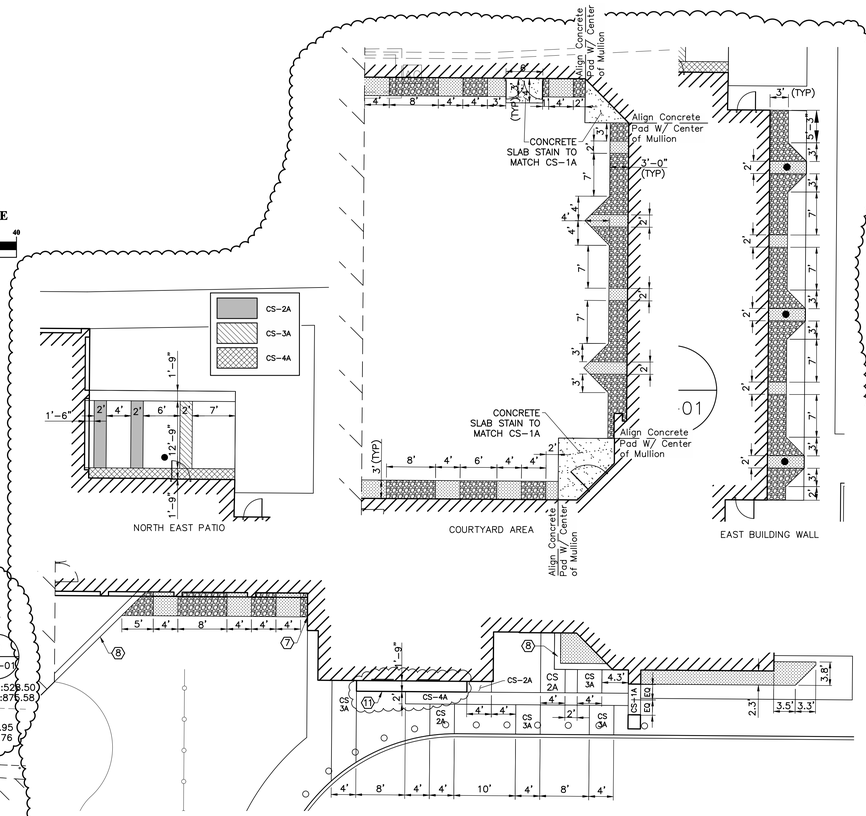

NOTES

1. Provide ¼" deep scored joints per Detail E/GS4-02 at each change in concrete color.
2. Extend colored concrete to asphalt pavement.
3. Refer to Architectural Plans for mullion locations, including sheets KDP-01 and Detail 7/A3-02.
4. Provide frost slabs for exterior concrete walks at building connections per Detail 9/S3-01.

A DETAIL
COLORED CONCRETE AND MOW STRIP PLANS
Scale: 1"=10'

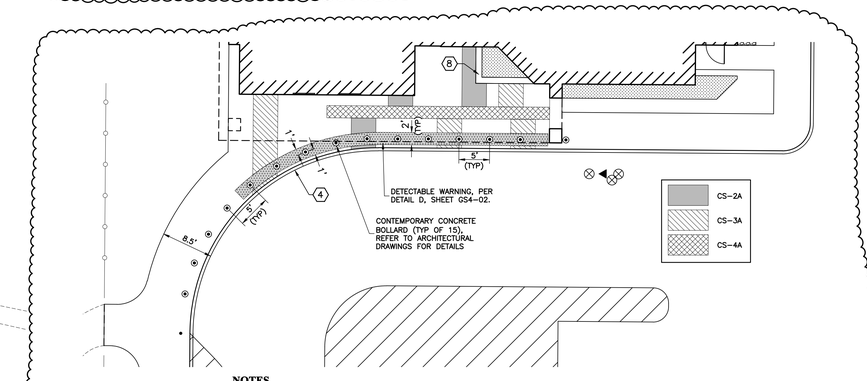

NOTES

1. Provide Contemporary Concrete Bollards. Refer to Architectural Drawings for details.
2. Alternate lighted and unlighted bollards beginning with unlighted bollard at east column.
3. Refer to Site Electrical Plans for conduits and circuitry associated with bollards.

B DETAIL
BOLLARD AND DETECTABLE WARNING AT FRONT ENTRY
Scale: 1"=10'

LEGEND

EXISTING

- Horizontal Survey Control Point, See Table
- Building
- Curb
- Sidewalk
- Edge of Pavement
- Valve
- Fire Hydrant
- Sanitary Manhole
- Communications Manhole
- Electric Manhole
- AC Unit
- Light Pole
- Gas Meter
- Sign
- Bollard
- Trees
- Wrought Iron Fence
- Iron Pin
- Steam Tunnel

PROPOSED

- Straight 18" Curb – Per Detail B/GS4-01
- Concrete Curb & Gutter – Per Detail C/GS4-01
- Building
- Overhang/Sunshade
- Concrete Sidewalk/Patio/Dumpster Pad
- Asphalt Pavement – Per Detail A/GS4-01
- Area Drain
- Manhole
- Catch Basin
- Contemporary Concrete Bollard, Refer to Architectural Drawings for Details
- Sign per Detail A/GS4-02
- Detectable Warnings per Detail D/GS4-02
- River Rock– White in Color
- River Rock– Dark Grey in Color

HORIZONTAL CONTROL

RP #	DESCRIPTION	NORTHING	EASTING
200	3/4" Pipe with a cap stamped "EHMT"	639756.1840	1472727.0100
201	3/4" Pipe with a cap stamped "EHMT"	639537.1340	1472716.1650
202	3/4" Pipe with a cap stamped "EHMT"	639329.8560	1472706.3780

GENERAL NOTES

1. All dimensions and coordinates are from face of building, edge of walk or face of curb, unless otherwise noted.
2. All curb radii are 5'-0" unless otherwise noted.
3. Provide striping as shown, per specification section 32 17 23 with 4" wide, white lines. Apply two (2) coats of paint for all markings.
4. Coordinates for the new building are for general excavation purposes and should not be used for layout of building or foundations. Refer to structural and architectural plans for building dimensions.
5. Provide ½ inch expansion joint filler where new concrete abuts new or existing structures.
6. Add 639,000 to all Northing coordinates and 1,472,000 to all Easting coordinates for project coordinates.
7. Underground utilities have not been shown for clarity. Refer to other sheets for utility locations.
8. Provide concrete scoring as described in Detail E, sheet GS4-02.
9. Provide 36" min strip per Detail C/GS4-03 adjacent to building in all areas when concrete does not abut building.
10. Provide bag sample of each river rock color for approval prior to ordering material.
11. Provide turndown slabs and connections at buildings with sidewalk per structural drawings.

CODED NOTES

1. Apply ODOT Item 407, Tack Coat to face of existing pavement. Provide ODOT Item 423, Crack Sealant along pavement joint.
2. Excavate existing fill soils over tunnel and replace with fill in accordance with specification Section 31 20 00. Refer to soils report for extent of fill soils to remove.
3. Align sidewalk with building corner. Sidewalk to be parallel to building.
4. Flush Curb
5. Transition Curb from flush to full height
6. Combination curb wheel-stop per Detail C/GS4-02.
7. Align gravel edge with mullion, refer to architectural drawings.
8. For bench details refer to Detail 4, Sheet A2-02. Concrete color to be CS-1A
9. Extend turn down slab from existing building to limit of entry door as shown.
10. Extend frost slab to limits of building. Turn down all sides.
11. Provide frost slab limits as shown per Detail 9/S3-01.

DESIGNER/ENGINEER
CAD OPERATOR
QAQC/CHECKER

Revisions	Date
Issued For Bid	02/28/2012
Pre Bid Amendment	05/10/2012

EMH&T
Evans, Mechwart, Hambleton & Tilton, Inc.
Engineers • Surveyors • Planners • Scientists
5500 New Albany Road, Columbus, OH 43054
Phone: 614.775.4500 Toll Free: 888.775.3648
emht.com

STATE OF OHIO
CHRISTOPHER M. FLEMING
E-64019
REGISTERED PROFESSIONAL ENGINEER
Professional Seal

Revised By:

Drawing Title: STAKING PLAN
SCALE: 1"=10'-0"

Project Title: OPEN MRI SITE PREP

Approved: Project Manager: MARK PERMELIA

Building Number: 335

Checked: EMH&T

Drawn:

Approved: Service Chief: GARY ABREU

Location: 4100 WEST THIRD STREET DAYTON, OH 45428

Date: 02/28/2012

Project No.: 552-CSI-101

Drawing No.: GS1-01

VAMC, DAYTON

VA Department of Veterans Affairs

VA FORM 08-6231, OCT 1978

STORM STRUCTURE COORDINATES*

STRUCTURE #	NORTHING	EASTING
1	639653.9652	1472695.3194
2	639671.6787	1472695.4611
3	639670.9155	1472588.8491
4	639532.0140	1472715.9980
5	639539.7275	1472644.0446
6	639540.1409	1472588.5927
7	639589.7278	1472590.2310
8	639617.5858	1472590.3353
9	639527.6330	1472746.0160
10	639466.2018	1472807.2031
11	639537.0662	1472865.2910
12	639454.6134	1472715.4063
13	639484.4700	1472614.1648
AD1	639619.7910	1472694.9280
AD2	639595.7910	1472694.7539
AD3	639571.7899	1472694.5812
AD6	639626.8311	1472608.1980
CO1	639638.8325	1472673.9343
CO2	639566.7938	1472600.6871

* Ohio South Zone, NAD 83 (1986 adj.)

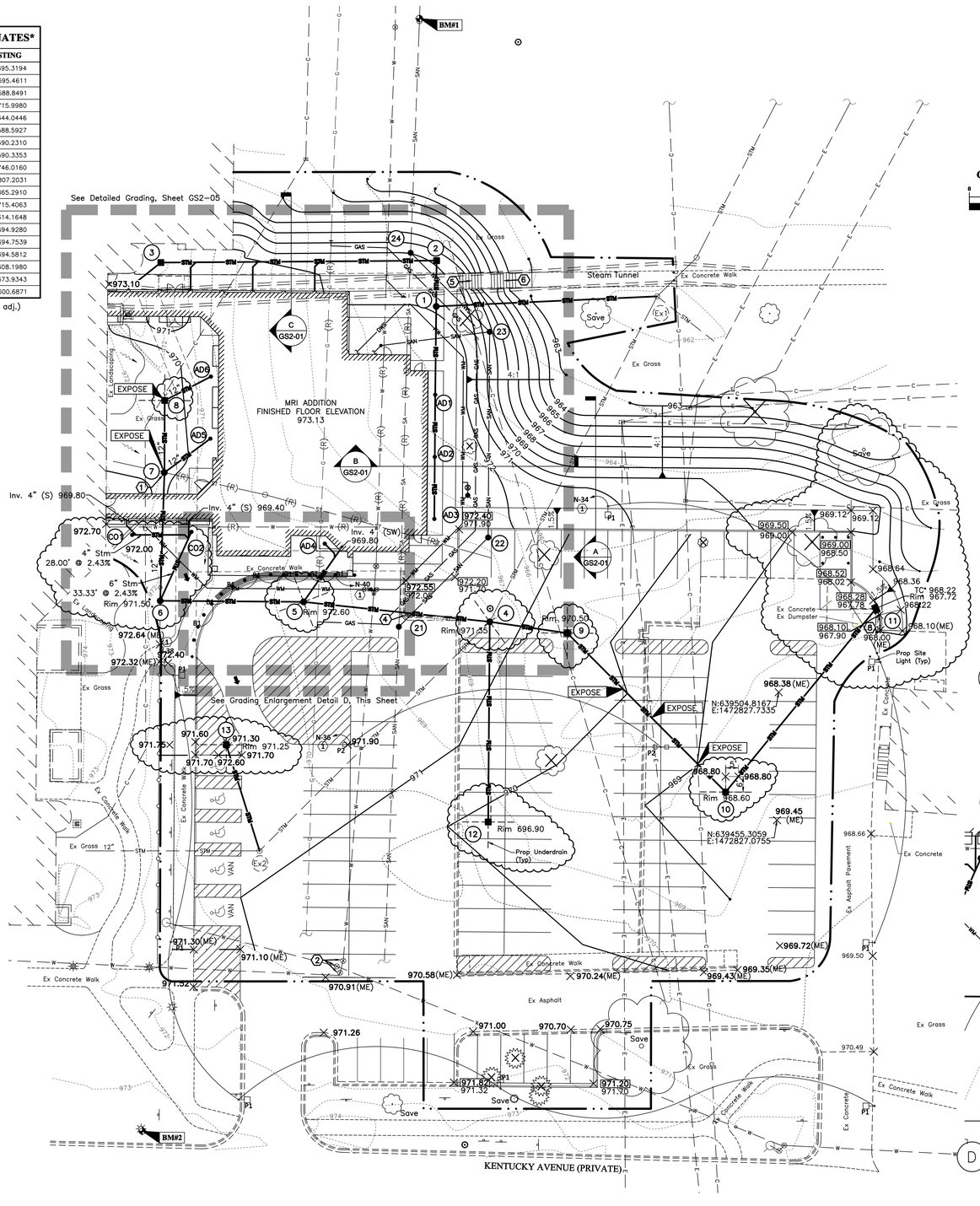

GRAPHIC SCALE

0 10 20 40

1 inch = 20 feet

GENERAL NOTES

1. All dimensions and spot elevations are to face of building, face of curb and edge of pavement, unless otherwise noted.
2. Provide minimum 2'-6" cover on all storm sewers and underdrains. Slope underdrains to nearest storm structure and slope to drain.
3. Provide 6 inches of topsoil and seed on all areas disturbed by construction. Per specification section Temporary and Permanent Seeding, page GS2-03.
4. Where potential grade conflicts might occur with existing utilities and locations noted thus, EXPOSE, the Contractor will be required to uncover such utilities sufficiently in advance of laying pipe or duct and provide the Engineer the location and elevation of said utility so the Engineer can determine if any adjustments are necessary.
5. Site electrical work for reference only. Coordinate site electrical work with electrical drawings.
6. Support utilities exposed during excavation.
7. Protect existing pavement, utilities and all other site features to remain. Replace any damaged to the satisfaction of the COTR at no additional cost.
8. Export all excess soils offsite in accordance with local codes.
9. Extend underdrains to nearest storm structure, slope to drain.

CODED NOTES

1. Expose existing storm prior to ordering any storm sewer structures on this run from structure #4 to #8. Provide elevation of existing sewer to the Engineer for confirmation of profile. Refer to general note #4 this sheet.
2. Adjust existing valve box to grade.
3. Connect to 2-inch building roof drain. Coordinate final location and elevation with Plumbing Drawings. Provide transition to 4-inch pipe at connection. Slope pipe to storm sewer at a minimum of 2 percent.
4. Remove existing curb inlet and 12-inch storm sewer to structure #4. Refer to Demolition Plan.
5. 8 Risers @ 6"Hx14"W
6. 8 Risers @ 5½"Hx14"W
7. Flush Curb
8. Transition to full height curb.

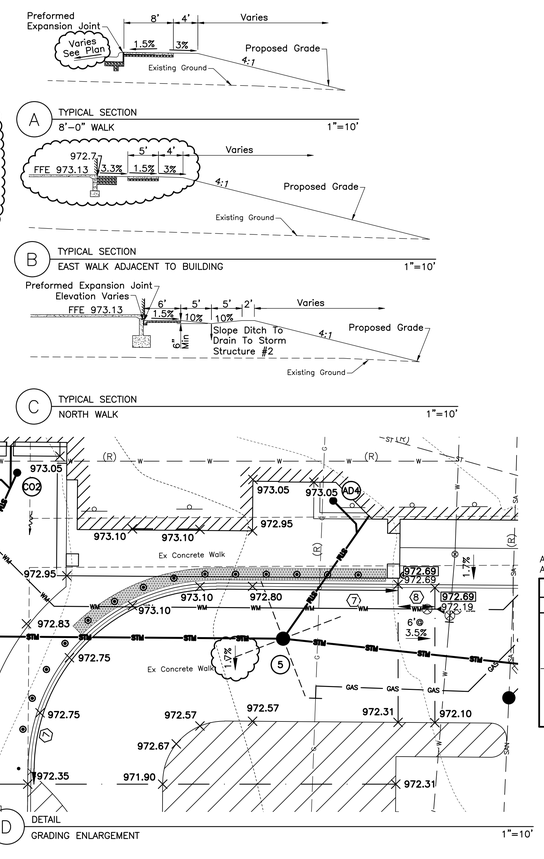

LEGEND

EXISTING

Building
Curb and Gutter
Sidewalk
Edge of Pavement
Waterline
Valve
Fire Hydrant
Sanitary Sewer
Sanitary Manhole
Storm Sewer
Storm Manhole
Storm Catch Basin
Storm Curb Inlet
Underground Communications
Communications Manhole
Underground Electric
Electric Manhole
AC Unit
Light Pole
Gas Meter
Sign
Bollard
Trees
Benchmark
Existing Wrought Iron Fence

PROPOSED

Building
Limits of Work/Grading/Seeding Limits
Contour
Water Valve
Domestic Water Service
Storm Sewer
Water Main
Sanitary Sewer
Gas Main
Area Drain
Manhole
Catch Basin
Cleanout
Sign
Match Existing
Slope/Grading line
Grade Break
Spot Elevation
Top of Curb Elevation
Bottom of Curb Elevation
Flow Arrow Slope to Drain
Major Flood Routing
Remove Existing Utility
Remove Existing Tree Completely
Protect Existing Tree to Remain, Per Detail A, Sheet GS0-02

BENCH MARKS

All bench marks and elevations shown upon this plan are based on the (NAVD88) North American Vertical Datum of 1988.

BENCH MARKS				
BM #	DESCRIPTION	NORTHING	EASTING	ELEVATION
1	Chiseled X on north rim of sanitary manhole located 85 feet northeast of the northeast corner of the existing building and 100 feet north of north edge of concrete sidewalk.	639765.28	1472688.82	961.89
2	Chiseled square on the southeast corner of concrete light pole base located on the northeast corner of Kentucky Drive and entrance to lot "A".	639335.12	1472581.68	973.89

DESIGNER/ENGINEER
CAD OPERATOR
QAQC/CHECKER

Revisions	Date
Issued For Bid	02/28/2012
Pre Bid Amendment	05/10/2012

EMH&T
Evans, Mechwart, Hambleton & Tilton, Inc.
Engineers • Surveyors • Planners • Scientists
5500 New Albany Road, Columbus, OH 43054
Phone: 614.775.4500 Toll Free: 888.775.3648
emht.com

STATE OF OHIO
CHRISTOPHER M. FLEMING
E-64019
REGISTERED PROFESSIONAL ENGINEER
Professional Seal

Revised By:

Drawing Title	Project Title	Date
GRADING	OPEN MRI SITE PREP	02/28/2012
Approved: Project Manager: MARK PERMELIA	Building Number: 335	Checked: EMH&T / Drawn:
Approved: Service Chief: GARY ABREU	Location: 4100 WEST THIRD STREET DAYTON, OH 45428	Project No. 552-CSI-101 / Drawing No. GS2-01

VAMC, DAYTON
VA Department of Veterans Affairs

VA FORM 08-6231, OCT 1978

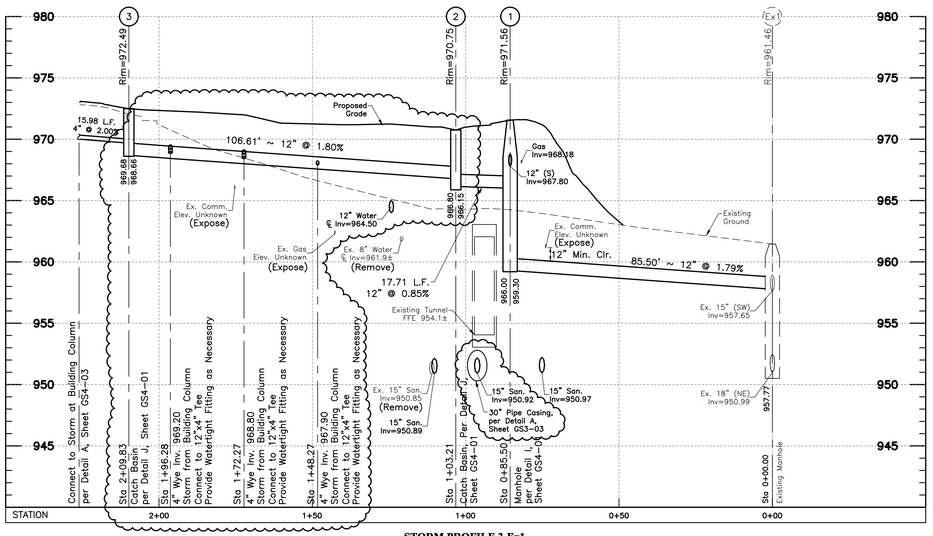

STORM PROFILE 3-Ex1
Horizontal Scale: 1" = 20'
Vertical Scale: 1"=5'

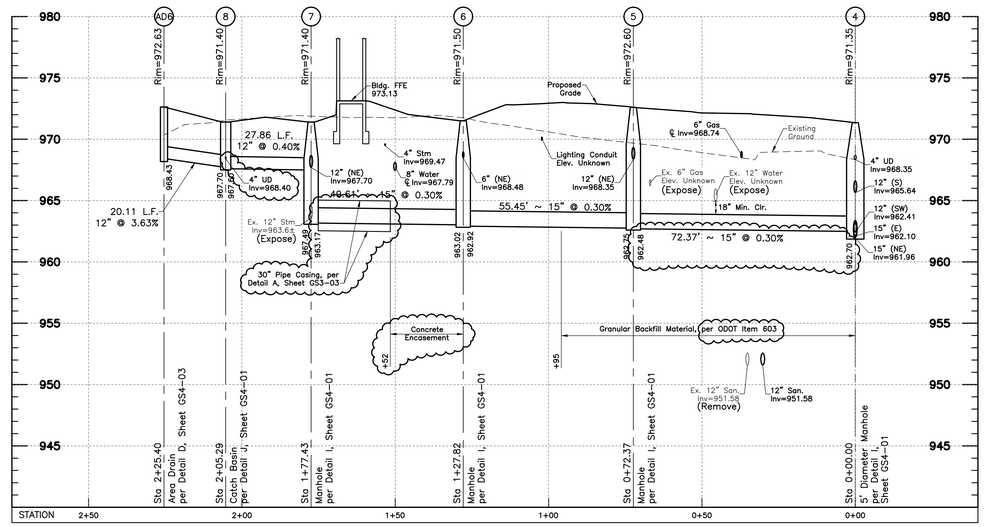

STORM PROFILE AD5-4
Horizontal Scale: 1" = 20'
Vertical Scale: 1"=5'

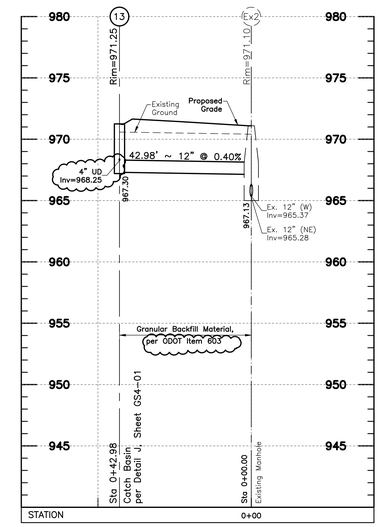

STORM PROFILE 13-Ex2
Horizontal Scale: 1" = 20'
Vertical Scale: 1"=5'

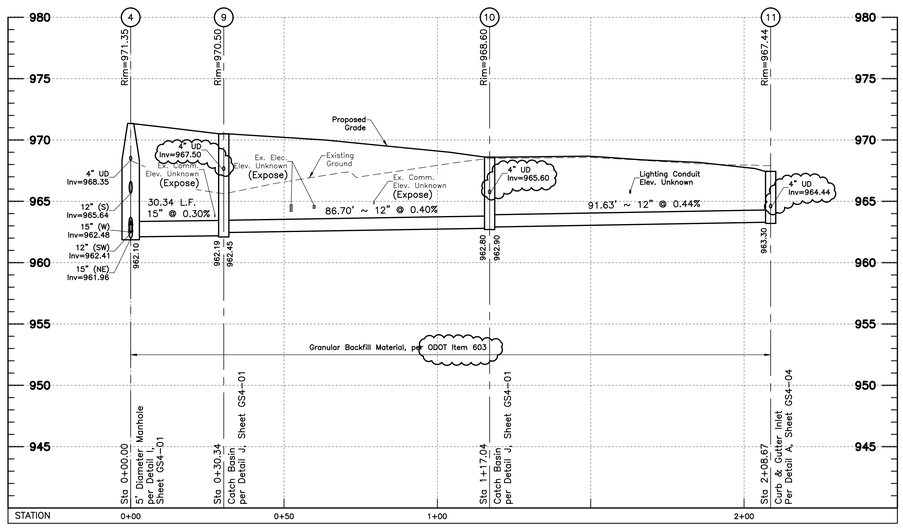

STORM PROFILE 4-11
Horizontal Scale: 1" = 20'
Vertical Scale: 1"=5'

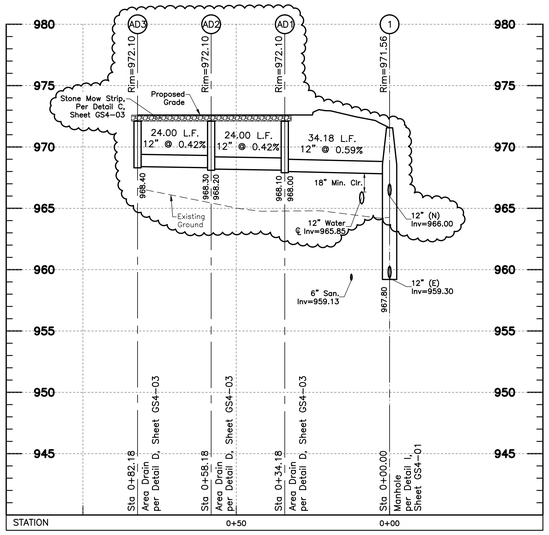

STORM PROFILE AD3-1
Horizontal Scale: 1" = 20'
Vertical Scale: 1"=5'

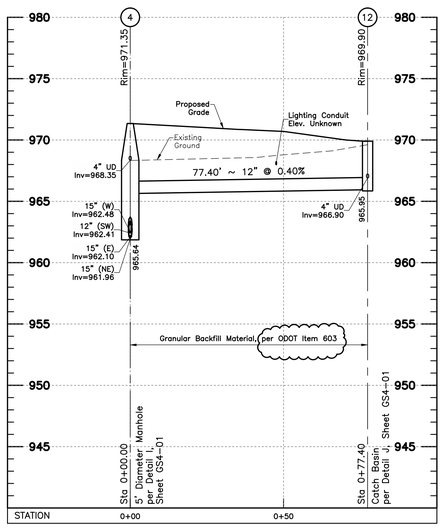

STORM PROFILE 4-12
Horizontal Scale: 1" = 20'
Vertical Scale: 1"=5'

DESIGNER/ENGINEER
CAD OPERATOR
QAQC/CHECKER

Revisions	Date
Issued For Bid	02/28/2012
Pre Bid Amendment	05/10/2012

EMH&T
Evans, Mechwart, Hambleton & Tilton, Inc.
Engineers • Surveyors • Planners • Scientists
5500 New Albany Road, Columbus, OH 43054
Phone: 614.775.4500 Toll Free: 888.775.3648
emht.com

STATE OF OHIO
CHRISTOPHER M. FLEMING
E-64019
REGISTERED PROFESSIONAL ENGINEER
Professional Seal

Revised By:

Drawing Title: STORM PROFILES
SCALE: NTS

Approved: Project Manager: MARK PERMELIA
Approved: Service Chief: GARY ABREU

Project Title: OPEN MRI SITE PREP
Building Number: 335
Checked: EMH&T
Drawn:
Location: 4100 WEST THIRD STREET DAYTON, OH 45428

Date: 02/28/2012
Project No. 552-CSI-101
Drawing No. GS2-02

VAMC, DAYTON
VA Department of Veterans Affairs

VA FORM 08-6231, OCT 1978

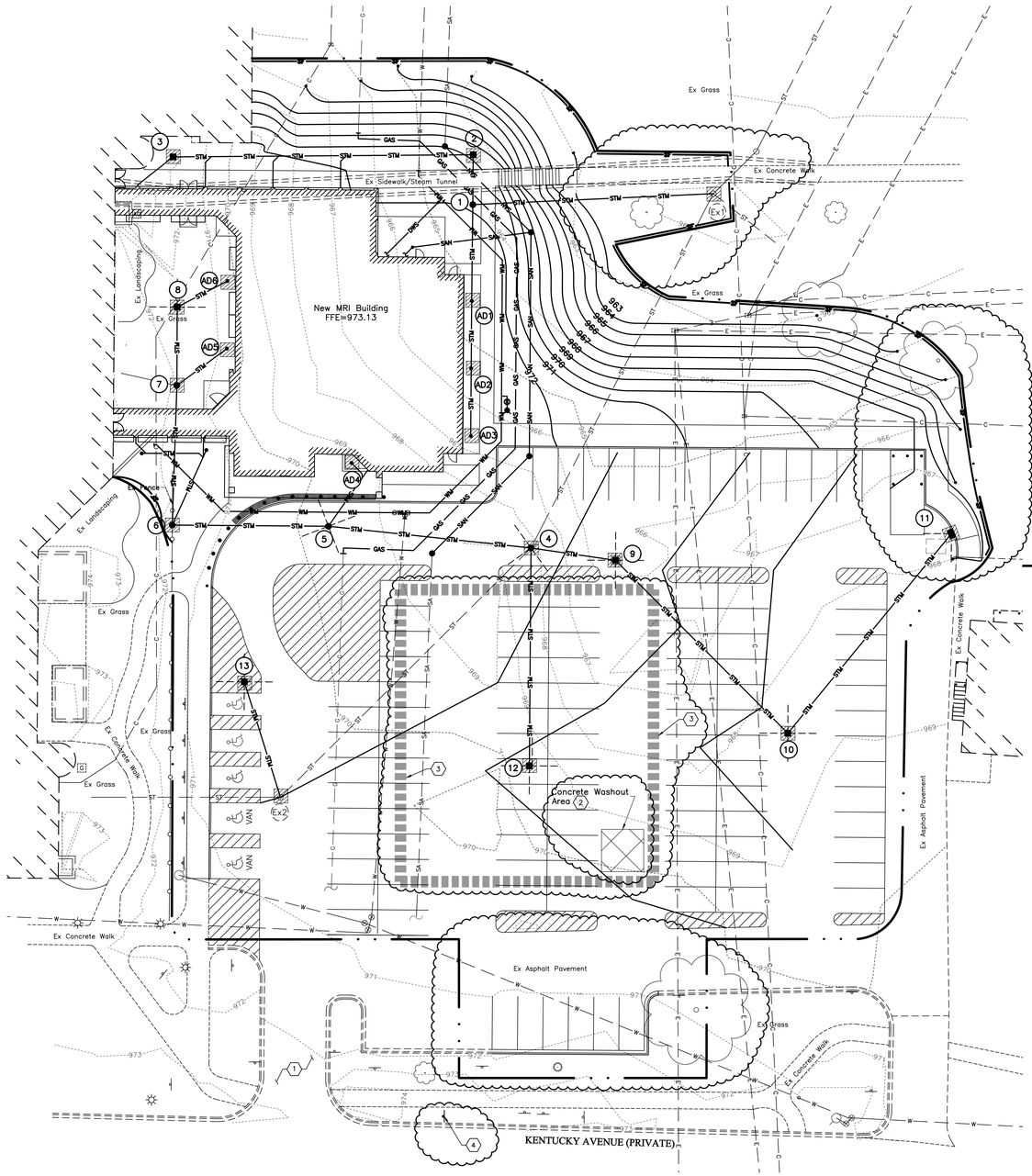

GRAPHIC SCALE

0 10 20 40

1 inch = 20 feet

LEGEND

- Area Drain
- Manhole
- Catch Basin
- Sign
- Sediment Fence
- Inlet Protection
- Concrete Washout Area (2)
- Limits of Work/Grading/ Seeding Limits

CODED NOTES

1. Existing asphalt entrance to be used as construction entrance.
2. Final location of concrete washout area to be determined by Contractor.
3. Staging area shown for general reference. Provide construction staging plan to COTR for approval prior to beginning work.
4. Provide construction entrance sign per detail C/GS2-04. Provide a second sign on the opposite side of Kentucky Avenue facing eastbound traffic in advance of the construction entrance. Final location of signs to be coordinated with COTR.

SEDIMENT AND EROSION CONTROL NOTES

MAINTENANCE: It is the Contractor's responsibility to maintain the sedimentation and erosion control features on this project. Any sediment or debris which has reduced the efficiency of a control shall be removed immediately. Should a structure or feature become damaged, the contractor shall repair or replace at no additional cost to the COTR.

INSPECTIONS:
The Contractor shall provide qualified personnel to conduct site inspections ensuring proper functionality of the erosion and sedimentation controls. All erosion and sedimentation controls are to be inspected once per every seven calendar days or within 24 hours of a .5" storm event or greater. Records of the site inspections shall be kept and made available to jurisdictional agencies if requested.

CONTRACTORS RESPONSIBILITIES:
Details have been provided on the plans in an effort to help the Contractor provide erosion and sedimentation control. The details shown on the plan shall be considered a minimum. Additional or alternate details may be found in the O.D.N.R. Manual "Rainwater and Land Development." The Contractor shall be solely responsible for providing necessary and adequate measures for proper control of erosion and sediment runoff from the site along with proper maintenance and inspection in compliance with the NPDES General Permit for Storm Discharges Associated with Construction Activity.

The Contractor shall provide a schedule of operations to the COTR. The schedule should include a sequence of the placement of the sedimentation and erosion control measures that provides for continual protection of the site throughout the earth moving activities.

Prior to Construction Operations in a particular area, all sedimentation and erosion control features shall be in place. Field adjustments with respect to locations and dimensions may be made by the COTR and the Ohio EPA.

The Contractor shall place inlet protection for the sedimentation control immediately after construction of the catch basins or inlets which are not tributary to a sediment basin or dam.

It may become necessary to remove portions of sedimentation controls during construction to facilitate the grading operations in certain areas. However, the controls shall be replaced upon completion of grading or during any inclement weather.

The Contractor shall be responsible to ensure that off-site tracking of sediments by vehicles and equipment is minimized. All such off-site sediment shall be cleaned up a minimum of twice daily and as directed by COTR.

The Contractor shall be responsible to ensure that no solid or liquid waste is discharged into storm water runoff. Untreated sediment-laden runoff shall not flow off of site without being directed through a control practice. Concrete trucks will not be allowed to wash out or discharge surplus concrete into or along-side rivers, streams, or creeks or into natural or man-made channels or swales leading thereto. Concrete wash water and surplus concrete shall be confined to approved areas; after solidifying, these waste materials shall be removed from the site.

TEMPORARY AND PERMANENT SEEDING

The limits of seeding and mulching are as shown within the plan as indicated by the limits of disturbance. All areas not designated to be seeded shall remain under natural ground cover. Those areas disturbed outside the seeding limits shall be seeded and mulched at the Contractor's expense.

TEMPORARY SEEDING: Any area which will be left dormant (undisturbed) for more than 21 days shall be seeded within 7 days of terminated work. Disturbed areas within 50 feet of a stream, first order or larger, shall be stabilized within 2 days of inactivity. Temporary seeding consists of seedbed preparation and application of seed, fertilizer, and water. Soil test is recommended to determine proper application rate of fertilizer and if lime is necessary.

Fertilizer 12-12-12	12 lb/1000 sq. ft.
Straw Mulch	2 tons/acre
Water	300 G/1000 sq. ft.

TEMPORARY SEEDING

SEEDING DATES	SPECIES	lb./1000 sq. ft.	Per acre
March 1 to November 1	Oats	3	4 bushel
	Tall Fescue	1	40 lb.
	Annual Ryegrass	1	40 lb.
	Perennial Ryegrass	1	40 lb.
	Tall Fescue	1	40 lb.
	Annual Ryegrass	1	40 lb.
November 1 to March 1	Use mulch only, sodding practices or dormant seeding		
NOTE: Other approved seed species may be substituted.			

PERMANENT SEEDING: Any area that is at final grade shall be seeded within 7 days of terminated work. Permanent seeding consists of seedbed preparation and application of seed, fertilizer, and water. Soil test is recommended to determine proper application rate of fertilizer and if lime is necessary. Ideal conditions for permanent seeding is March 1-May 31 and August 1-September 30.

PERMANENT SEEDING

SEED MIX	SEEDING RATE lb/acre	SEEDING RATE lb/1000 sq.ft.	NOTES
GENERAL USE			
Creeping Red Fescue	20-40	1/2-1	
Domestic Ryegrass	10-20	1/4-1/2	
Kentucky Bluegrass	10-20	1/4-1/2	
Tall Fescue	40	1	
Dwarf Fescue	40	1	
NOTE: Other approved seed species may be substituted.			

SITE NARRATIVE

PLAN DESIGNER: EMH&T, Inc.
5500 New Albany Road
Columbus, Ohio 43054
Phone: (614) 775-4500
Fax: (614) 775-4800

DEVELOPER/ OWNER/ SITE CONTACT: Dayton VAMC
4100 West Third Street
Dayton, OH 45428
Contact: Mark Permelia
Phone: (937) 268-6511 x2810
Email: mark.permelia@va.gov

PROJECT DESCRIPTION: This site is an existing medical campus including hospital and accessory use buildings with asphlat parking lots and circulation drives. The disturbed area is 1.7± acres. The proposed development is construction of a new addition that will house an MRI unit, waiting rooms and circulation corridors. The site development includes new site walks, storm sewers, a sanitary sewer service, waterlines, circulation drives and parking lots. Storm water runoff is collected by a series of catch basins and area drains and flows into the VA's existing storm water management pond.

RECEIVING STREAM: Great Miami River

ADJACENT AREAS: The site is surrounded by other areas of the Dayton VA medical campus.

SOILS: Per the Montgomery County Soils Map: The eastern approximately one third of the site consists of soil type; EmB, Eldean-Urban Land Complex, 2 to 6 percent slopes. The majority of the remainer of the site consists of soil type; WeA, Wea Silt Loam, 0 to 2 percent slopes which has a high sand and gravel content.

GRADING REQUIREMENTS: The existing site condition drains primarily to the center of the site and then north via an existing storm sewer system. The proposed development will utilize the same storm sewer system, but will add more structures for drainage. The paved surfaces of the site are sloped at generally 1 to 5 percent. The grass covered areas will be sloped from 1 percent to a maximum of 4H:1V.

EROSION AND SEDIMENT MEASURES: Sediment fence and storm sewer inlet protection will be installed to increase sediment control efficiency. Disturbed areas resulting from construction activities will be stabilized according to the temporary and permanent seeding requirements.

PERMANENT STABILIZATION: The site will be stabilized by the use of seeding or sodding in overlot areas.

MAINTENANCE: All erosion control devices are to be inspected by the construction superintendent daily and after significant rainfalls. Any damaged facilities are to be replaced/repaired immediately.

CONSTRUCTION SEQUENCE:
1. Establish a designated construction entrance/exit.
2. Install perimeter sediment fence and any inlet protection required for existing storm sewer structures.
3. Clear the existing vegetation and commence with demolition work and rough grading.
4. Install permanent storm sewer with inlet protection.
5. Install utilities and sewers. Provisions for inlet protection shall be established as referenced by the details shown on sheet GS2-04.
6. Construct the curbs, parking areas, and access drives.
7. Backfill the curbs, fine grade, and stabilize.
8. Finish the construction of the building.
9. Fine grade and stabilize the disturbed areas.
10. Upon permanent stabilization of the site, remove the sediment fence and inlet protection.

SCHEDULE: The Contractor shall provide a schedule of operations to COTR. Sedimentation and erosion control features shall be placed in accordance with this schedule.

DESIGNER/ENGINEER
CAD OPERATOR
QAQC/CHECKER

Revisions	Date
Issued For Bid	02/28/2012
Pre Bid Amendment	05/10/2012

EMH&T
Evans, Mechwart, Hambleton & Tilton, Inc.
Engineers • Surveyors • Planners • Scientists
5500 New Albany Road, Columbus, OH 43054
Phone: 614.775.4500 Toll Free: 888.775.3648
emht.com

STATE OF OHIO
CHRISTOPHER M. FLEMING
E-64019
REGISTERED PROFESSIONAL ENGINEER
Professional Seal

Revised By:

Drawing Title: SEDIMENT & EROSION CONTROL PLAN
SCALE: 1"=20'-0"

Approved: Project Manager: MARK PERMELIA
Approved: Service Chief: GARY ABREU

Project Title: OPEN MRI SITE PREP
Building Number: 335
Checked: EMH&T
Drawn:
Location: 4100 WEST THIRD STREET DAYTON, OH 45428

Date: 02/28/2012
Project No. 552-CSI-101
Drawing No. GS2-03

VAMC. DAYTON
VA Department of Veterans Affairs

VA FORM 08-6231, OCT 1978

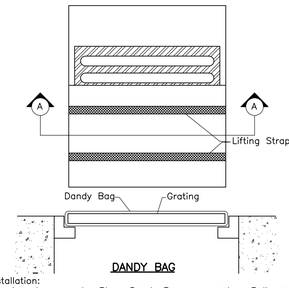

DANDY BAG

Installation:
Stand grate on end. Place Dandy Bag over grate. Roll grate over so that open end is up. Pull up slack. Tuck flap in. Be sure end of grate is completely covered by flap or Dandy Bag will not fit properly. Holding handles, carefully place Dandy Bag with grate inserted into catch basin frame so that red dot on the top of the Dandy Bag is visible.

Maintenance:
With a stiff bristle broom or square point shovel, remove silt & other debris from surface after each event.

Install At Structures: 1, 2, 3, 4, 6, 7, 8, 9, 10, 11, 12, 13

A DETAIL
INLET PROTECTION (No Scale)

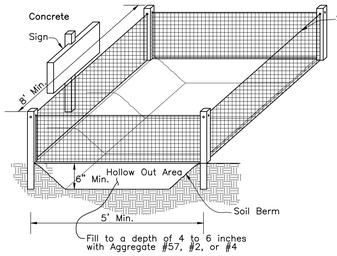

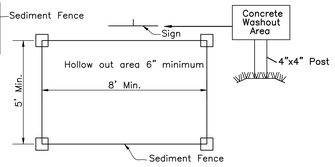

PLAN VIEW

Notes

1. Concrete trucks shall utilize areas to washout trucks.
2. Accumulated concrete shall be removed from the site and disposed of properly.
3. As an alternate, contractor shall use a roll off box with liner.
4. Coordinate the location with COTR.

B DETAIL
CONCRETE WASHOUT AREA (No Scale)

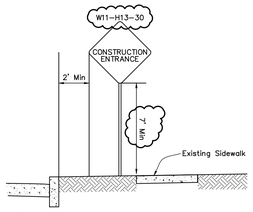

Note:
1. Signs to be installed in advance of entrance.

C DETAIL
CONSTRUCTION ENTRANCE SIGN (No Scale)

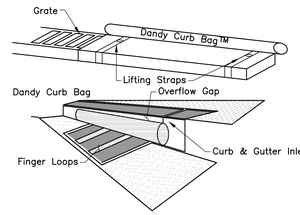

Installation Note:
1. Stand grate on end. Slide the Dandy Curb Bag on with Dam on top of the grate. Pull all excess down. Lay unit on its side. Carefully tuck flap in. Press Velcro strips together. Install the unit making sure front edge of grate is inserted in frame first then lower back into place. Press Velcro dots together which are located under lifting straps. This insures straps remain flush with gutter.

Maintenance Note:
1. With a stiff bristle broom or square point shovel, remove silt and other debris off surface after each event.

D DETAIL
DANDY CURB BAG SEDIMENT FILTER (No Scale)

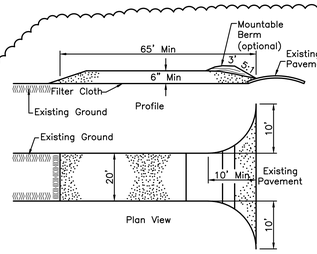

Construction Specifications

1. Stone Size – Use 2" Stone, or Reclaimed or Recycled Concrete Equivalent.
2. Length – 65' Min.
3. Thickness – not Less than Six (6) Inches.
4. Width – Twenty (20) Foot Minimum, but not Less than the Full Width at Points where Ingress or Egress Occurs.
5. Filter Cloth – will be Placed Over the Entire Area Prior to Placing of Stone.
6. Surface Water – All Surface Water Flowing or Diverted Toward Construction Entrances shall be Piped Across the Entrance. If Piping is Impractical, a Mountable Berm with 5:1 Slopes will be Permitted. Cost of Pipe shall be Included in the Price Bid for the Stabilized Construction Entrance.
7. Maintenance – The Entrance shall be Maintained in a Condition which will Prevent Tracking or Flowing of Sediment onto Public Right–of–Way. This may Require Periodic Top Dressing with Additional Stone as conditions Demand and Repair and/or Cleanout of any Measures used to Trap Sediment. All Sediment Spilled, Dropped, Washed or Tracked onto Public Rights–of–Way must be Removed Immediately.
8. Washing – Wheels shall be Cleaned to Remove Sediment Prior to Entrance onto Public Right–of–Ways. When Washing is Required, it shall be Done on an Area Stabilized with Stone and which Drains into an Approved Sediment Trapping Device.
9. Periodic Inspection and Needed Maintenance shall be Provided After Each Rain.

E DETAIL
STABILIZED CONSTRUCTION ENTRANCE (No Scale)

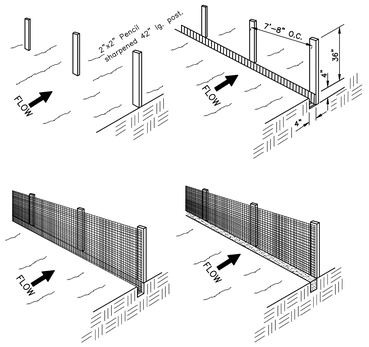

Silt Fence: This sediment barrier utilizes standard strength or extra strength synthetic filter fabrics. It is designed for situations in which only sheet or overland flows are expected.

General Notes:

1. The height of a silt fence shall not exceed 36–inches (higher fences may impound volumes of water sufficient to cause failure of the structure).
2. The filter fabric shall be purchased in a continuous roll cut to the length of the barrier to avoid the use of joints. When joints are necessary, filter cloth shall be spliced together only at a support post, with a minimum of a 6 inch overlap, and securely sealed.
3. Posts shall be spaced a maximum of 10 feet apart at the barrier location and driven securely into the ground (minimum of 12–inches). When extra strength fabric is used without the wire support fence, post spacing shall not exceed 6 feet.
4. A trench shall be excavated approximately 4–inches wide and 4 inches deep along the line of posts and upslope from the barrier.
5. When standard strength filter fabric is used, a wire mesh support fence shall be fastened securely to the upslope side of the posts using heavy duty wire staples at least 1–inch long, tie wires or hog rings. The wire shall extend into the trench a minimum of 2–inches and shall not extend more than 36–inches above the original ground surface.
6. The standard strength filter fabric shall be stapled or wired to the fence, and 8–inches of the fabric shall be extended into the trench. The fabric shall not extend more than 36–inches above the original ground surface. Filter fabric shall not be stapled to existing trees.
7. When extra strength filter fabric and closer post spacing are used, the wire mesh support fence may be eliminated. In such a case, the filter fabric is stapled or wired directly to the posts with all other provisions of Item No. 6 applying.
8. The trench shall be backfilled and soil compacted over the filter fabric.
9. Silt fences shall be removed when they have served their useful purpose, but not before the upslope area has been permanently stabilized.

Maintenance Notes:

1. Silt fences and filter barriers shall be inspected immediately after each rainfall and at least daily during prolonged rainfall. Any required repairs shall be made immediately. Should the fabric on a silt fence or filter barrier decompose or become ineffective prior to the end of the expected usable life and the barrier is still necessary, the fabric shall be replaced promptly.
2. Sediment deposits should be removed after each storm event. They must be removed when deposits reach approximately one–half the height of the barrier.
3. Any sediment deposits remaining in place after the silt fence or filter barrier is no longer required shall be dressed to conform with the existing grade, prepared and seeded.

F DETAIL
SEDIMENT FENCE DETAIL (No Scale)

DESIGNER/ENGINEER
CAD OPERATOR
QAQC/CHECKER

Revisions	Date
Issued For Bid	02/28/2012
Pre Bid Amendment	05/10/2012

EMH&T
Evans, Mechwart, Hambleton & Tilton, Inc.
Engineers • Surveyors • Planners • Scientists
5500 New Albany Road, Columbus, OH 43054
Phone: 614.775.4500 Toll Free: 888.775.3648
emht.com

STATE OF OHIO
CHRISTOPHER M. FLEMING
E–64019
REGISTERED PROFESSIONAL ENGINEER
Professional Seal

Revised By:
– – –

Drawing Title: SEDIMENT & EROSION CONTROL DETAILS	SCALE: NONE
Approved: Project Manager: MARK PERMELIA	
Approved: Service Chief: GARY ABREU	
Project Title: OPEN MRI SITE PREP	
Building Number: 335	Checked: EMH&T / Drawn:
Location: 4100 WEST THIRD STREET DAYTON, OH 45428	
Date: 02/28/2012	
Project No.: 552–CSI–101	
Drawing No.: GS2-04	

VAMC, DAYTON
VA Department of Veterans Affairs

VA FORM 08–6231, OCT 1978

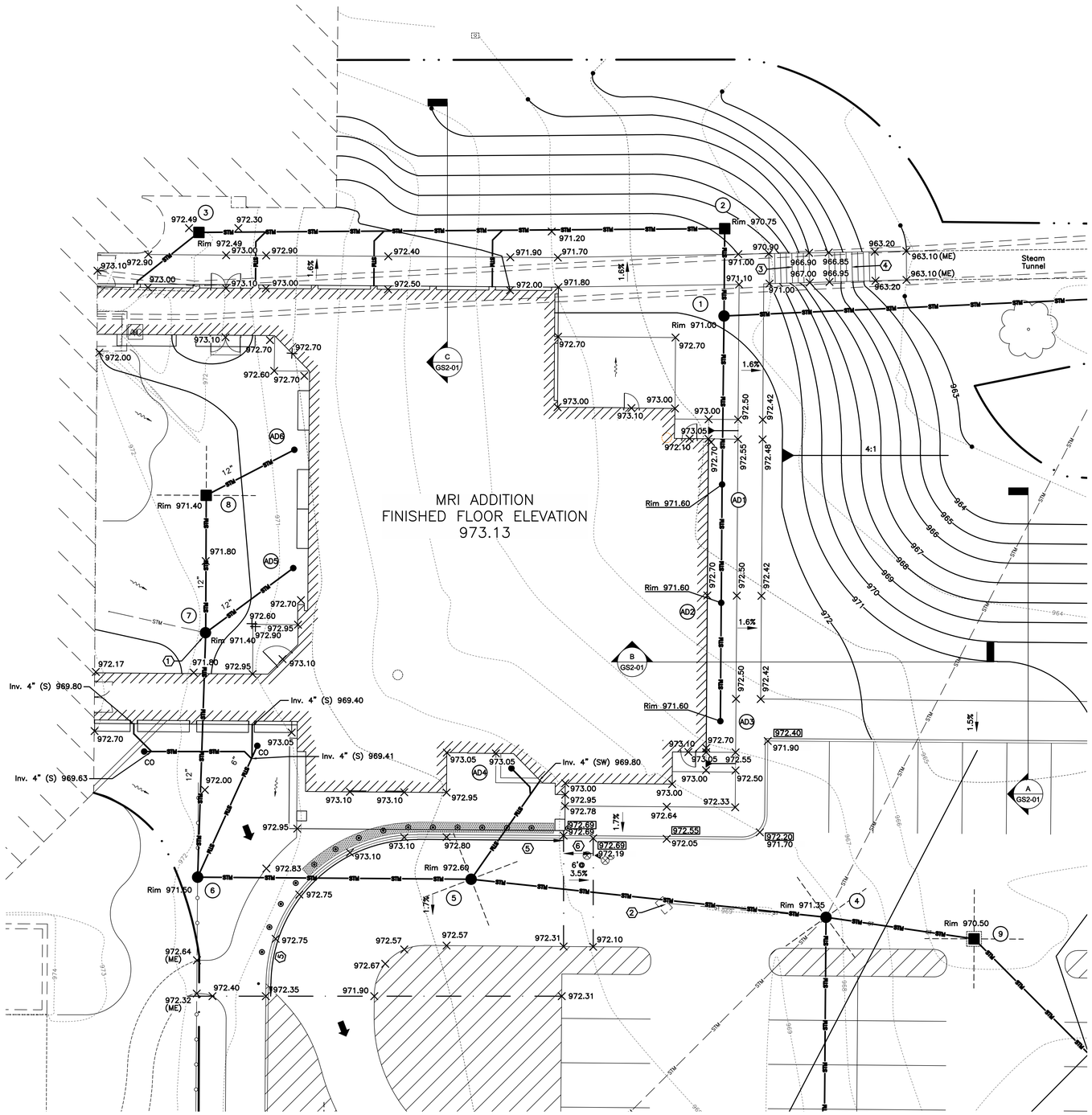

GRAPHIC SCALE

0 5 10 20

1 inch = 10 feet

GENERAL NOTES

1. All dimensions and spot elevations are to face of building, face of curb and edge of pavement, unless otherwise noted.
2. Provide minimum 2'-6" cover on all storm sewers and underdrains. Slope underdrains to nearest storm structure.
3. Provide 6 inches of topsoil and seed on all areas disturbed by construction. Per specification section Temporary and Permanent Seeding, page GS2-03.
4. Support utilities exposed during excavation.
5. Protect existing pavement, utilities and all other site features to remain. Replace any damaged to the satisfaction of the COTR at no additional cost.
6. Export all excess soils offsite in accordance with local codes.
7. Extend underdrains to nearest storm structure.

CODED NOTES

1. Expose existing storm prior to ordering any storm sewer structures on this run from structure #4 to #8. Provide elevation of existing sewer to the Engineer for confirmation of profile. Refer to general note #4 this sheet.
2. Remove existing curb inlet and 12-inch storm sewer to structure #4. Refer to Demolition Plan.
3. 8 Risers @ 6"Hx14"W
4. 8 Risers @ 5½"Hx14"W
5. Flush Curb
6. Transition to Full Height Curb

LEGEND

EXISTING

- Building
- Curb
- Sidewalk
- Edge of Pavement
- Waterline
- Valve
- Fire Hydrant
- Sanitary Sewer
- Sanitary Manhole
- Storm Sewer
- Storm Manhole
- Storm Catch Basin
- Storm Curb Inlet
- Communications
- Communications Manhole
- Electric
- Electric Manhole
- AC Unit
- Light Pole
- Gas Meter
- Sign
- Bollard
- Trees
- Benchmark
- Fence

PROPOSED

- Propose Building
- Limits of Work/Grading/Seeding Limits
- Contour
- Water Valve
- Domestic Water Service
- Storm Sewer
- Water Main
- Sanitary Sewer
- Gas Main
- Area Drain
- Manhole
- Catch Basin
- Cleanout
- Sign
- Match Existing
- Slope/Grading line
- Grade Break
- Spot Elevation
- Top of Curb Elevation
- Bottom of Curb Elevation
- Flow Arrow Slope to Drain
- Major Flood Routing
- Remove Existing Utility

BENCH MARKS

All bench marks and elevations shown upon this plan are based on the (NAVD88) North American Vertical Datum of 1988.

BENCH MARKS

BM #	DESCRIPTION	NORTHING	EASTING	ELEVATION
1	Chiseled X on north rim of sanitary manhole located 85 feet northeast of the northeast corner of the existing building and 100 feet north of north edge of concrete sidewalk.	639765.28	1472688.82	961.89
2	Chiseled square on the southeast corner of concrete light pole base located on the northeast corner of Kentucky Drive and entrance to lot "A".	639335.12	1472581.68	973.89

DESIGNER/ENGINEER
CAD OPERATOR
QAQC/CHECKER

Revisions	Date
Issued For Bid	02/28/2012
Pre Bid Amendment	05/10/2012

EMH&T
Evans, Mechwart, Hambleton & Tilton, Inc.
Engineers • Surveyors • Planners • Scientists
5500 New Albany Road, Columbus, OH 43054
Phone: 614.775.4500 Toll Free: 888.775.3648
emht.com

STATE OF OHIO
CHRISTOPHER M. FLEMING
E-64019
REGISTERED PROFESSIONAL ENGINEER
Professional Seal

Revised By:

Drawing Title: DETAILED GRADING	Project Title: OPEN MRI SITE PREP
Approved: Project Manager: MARK PERMELIA	Building Number: 335
Approved: Service Chief: GARY ABREU	Location: 4100 WEST THIRD STREET DAYTON, OH 45428

Checked: EMH&T
Drawn:

Date: 02/28/2012
Project No. 552-CSI-101
Drawing No. GS2-05

VAMC, DAYTON
VA Department of Veterans Affairs

VA FORM 08-6231, OCT 1978

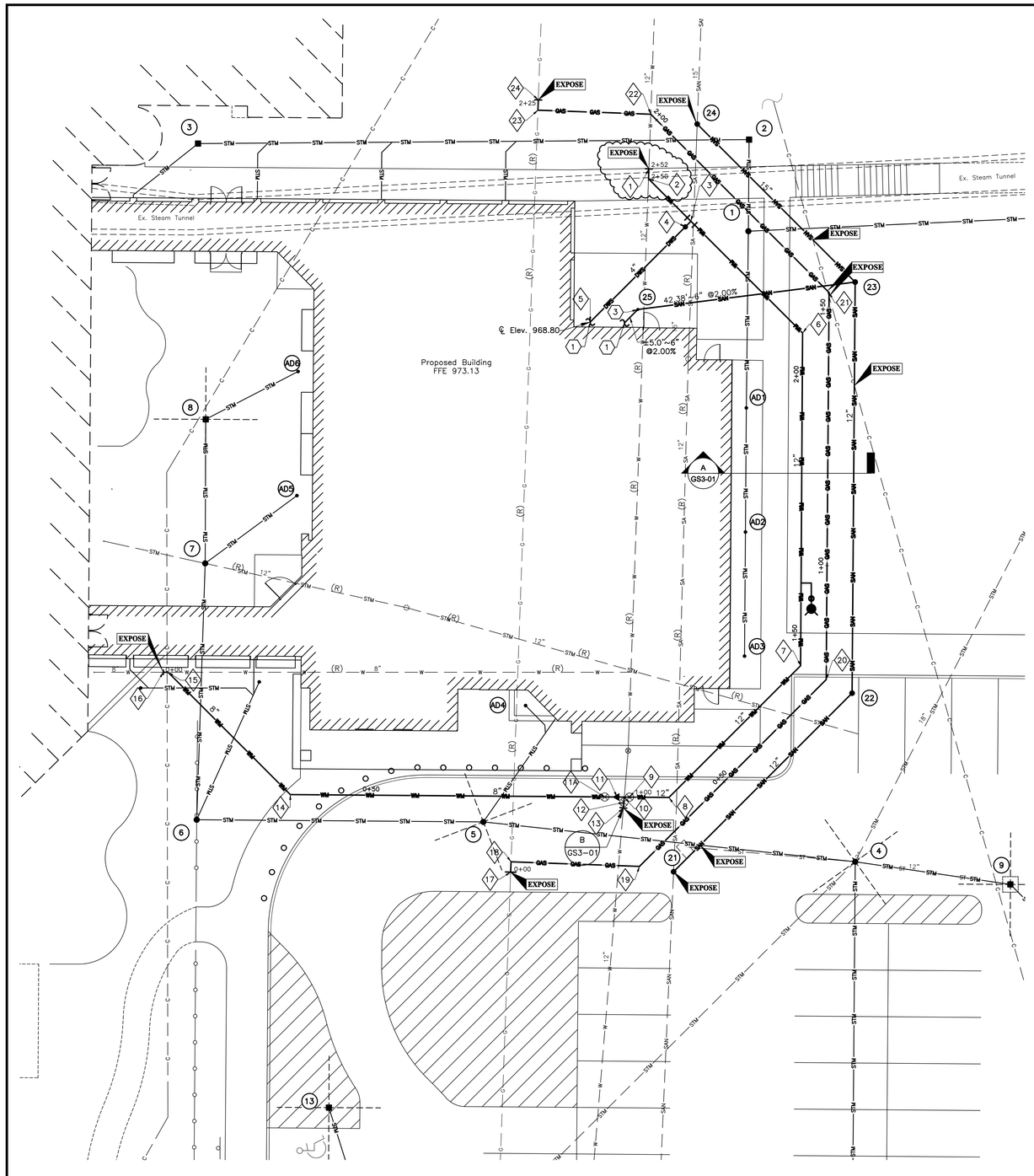

GENERAL NOTES

1. Dimensions and coordinates are to the center of manholes and catch basins, centerline of pipes, from face of curb, edge of pavement and face of building.
2. Where potential grade conflicts might occur with existing utilities and locations noted thus, **EXPOSE** uncover existing utilities sufficiently in advance of ordering materials and laying pipe or duct and provide the COTR the location and elevation of said utility so the COTR can determine if any adjustments are necessary.
3. Expose existing Sanitary Sewer prior to ordering any structures and provide the COTR the location and elevation of said existing utility so COTR can determine if any adjustments are necessary.
4. Completely fill utilities to be abandoned in place (AB) with Type I fill. Refer to Specification Section 31 20 00.
5. Maintain a minimum of 4'–6" cover (to top of pipe) over all waterlines.
6. Refer to site grading plan for storm sewer work.
7. Support and protect all utilities exposed during construction
8. Adjust castings and valve boxes to finished grades. Refer to grading plans for elevation.
9. Site lighting and electrical work shown for coordination only. Refer to electrical plans for layout and details. Coordinate work with site electrical contractor.
10. Utilities noted thus (REC) are shown on drawings in approximate locations based on field visits, record drawings provided by the Owner. Expose and determine exact size and location prior to beginning work.
11. Refer to sheet GS3–02 for water and sanitary profiles.
12. The Contractor is responsible for the investigation, location, support, protection, and restoration of all existing utilities and appurtenances whether shown on these plans or not. The Contractor shall expose all utilities or structures prior to construction to verify the vertical and horizontal effect on the proposed construction.
13. Notify Owner 14 days prior to any utility shutdowns.
14. Protect existing pavement, utilities and all other site features to remain. Replace any damaged to the satisfaction of the Owner at no additional cost.
15. Saw cut existing pavement full depth. Provide clean straight edges where new pavement meets existing pavement.
16. Provide temporary by–pass pumping for sanitary and storm sewers as necessary to maintain service at all times during construction. By–pass pumping shall be adequately sized to provide service with no degradation to the adjacent buildings.

CODED NOTES

1. Extend utilities to 5'–0" outside building and cap and mark for final connection by plumbing contractor. Refer to plumbing drawings for connections to building systems. Coordinate locations and elevation with plumbing contractor.
2. Not Used
3. Sanitary Sewer Clean Out (Structure #25). Rim=973.00
4. Provide cap and thrust block.
5. Connect to existing service line. Confirm size and location prior to beginning work.
6. Valve with Heavy Duty Valve Box

LEGEND

EXISTING

- Building
- Curb
- Sidewalk
- Edge of Pavement
- Waterline
- Valve
- Fire Hydrant
- Sanitary Sewer
- Sanitary Manhole
- Storm Sewer
- Storm Manhole
- Storm Catch Basin
- Storm Curb Inlet
- Underground Communications
- Communications Manhole
- Underground Electric
- Electric Manhole
- AC Unit
- Light Pole
- Gas Meter
- Sign
- Bollard
- Trees
- Benchmark
- Fence
- Steam Tunnel
- Gas Main

PROPOSED

- Storm Sewer
- Water Main
- Sanitary Sewer
- Domestic Water Service
- Gas Main
- Remove Utility
- Valve with Heavy Duty Valve Box
- Area Drain
- Manhole
- Catch Basin

WATER COORDINATES

REF PNT NUMBER	ITEM	ANGLE	STATION	NORTHING	EASTING
1	Connect to Existing Water Main		2+52.00	639666.0227	1472676.0702
2	45° Bend	44°39'34"	2+50.14	639664.0934	1472676.2033
3	12"x12"x4" Tee		2+38.55	639658.8245	1472687.1434
4	4" Valve w/ Heavy Duty Valve Box		2+38.55	639657.7470	1472686.0659
5	End 4" Water Service		2+38.55	639636.4005	1472664.7194
6	45° Bend	45°20'26"	2+07.99	639640.1241	1472705.8438
7	45° Bend	44°39'34"	1+43.65	639569.8857	1472705.4700
8	45° Bend	45°25'38"	1+07.64	639544.4599	1472679.9535
9	12" Valve w/ Heavy Duty Valve Box		0+99.99	639544.5169	1472672.3172
10	12"x12"x12" Tee		0+98.99	639544.5243	1472671.3180
11	12"x8" Reducer		0+97.59	639544.5348	1472669.9173
11A	8" Valve w/ Heavy Duty Valve Box		0+95.20	639544.5526	1472667.5274
12	12" Valve w/ Heavy Duty Valve Box		0+98.91	639543.1703	1472671.2045
13	Connect to Existing 12" Water Main		0+98.83	639542.4300	1472671.1428
14	45° Bend	44°34'22"	0+34.38	639545.0060	1472606.7046
15	45° Bend	45°00'00"	0+00.92	639568.6647	1472583.0459
16	Connect to Existing Water Main		0+00.00	639568.6647	1472582.1319

GAS COORDINATES

STRUCTURE		ANGLE	NORTHING	EASTING
17	Connect to Existing Gas Main		639530.0080	1472649.3319
18	90° Bend	90°00'00"	639532.0067	1472649.4035
19	45° Bend	47°03'00"	639531.1175	1472674.2453
20	45° Bend	44°34'22"	639567.2526	1472710.3804
21	45° Bend	45°25'38"	639642.1007	1472710.9384
22	45° Bend	42°57'00"	639676.5926	1472676.4464
23	90° Bend	90°00'00"	639677.3744	1472654.6069
24	Connect to Existing Gas Main		639679.3731	1472654.6784

SANITARY STRUCTURE COORDINATES

STRUCTURE	NORTHING	EASTING
21	639530.0907	1472680.8528
22	639564.6255	1472715.3875
23	639644.1299	1472715.9802
24	639674.6858	1472685.4243
25	639638.8325	1472673.9343

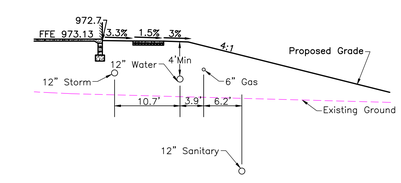

A TYPICAL SECTION 1"=10"

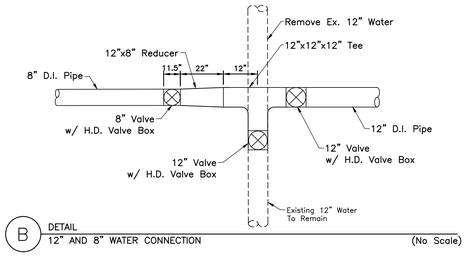

B DETAIL
12" AND 8" WATER CONNECTION (No Scale)

DESIGNER/ENGINEER
CAD OPERATOR
QAQC/CHECKER

Revisions	Date
Issued For Bid	02/28/2012
Pre Bid Amendment	05/10/2012

EMH&T
Evans, Mechwart, Hambleton & Tilton, Inc.
Engineers • Surveyors • Planners • Scientists
5500 New Albany Road, Columbus, OH 43054
Phone: 614.775.4500 Toll Free: 888.775.3648
emht.com

STATE OF OHIO
CHRISTOPHER M. FLEMING
E–64019
REGISTERED PROFESSIONAL ENGINEER
Professional Seal

Revised By:
– – –

Drawing Title: UTILITY PLAN

Project Title: OPEN MRI SITE PREP

Date: 02/28/2012

Project No. 552–CSI–101

Approved: Project Manager: MARK PERMELIA

Building Number: 335

Checked: EMH&T

Drawn:

Approved: Service Chief: GARY ABREU

Location: 4100 WEST THIRD STREET DAYTON, OH 45428

Drawing No. GS3-01

VAMC, DAYTON

Department of Veterans Affairs

VA FORM 08–6231, OCT 1978

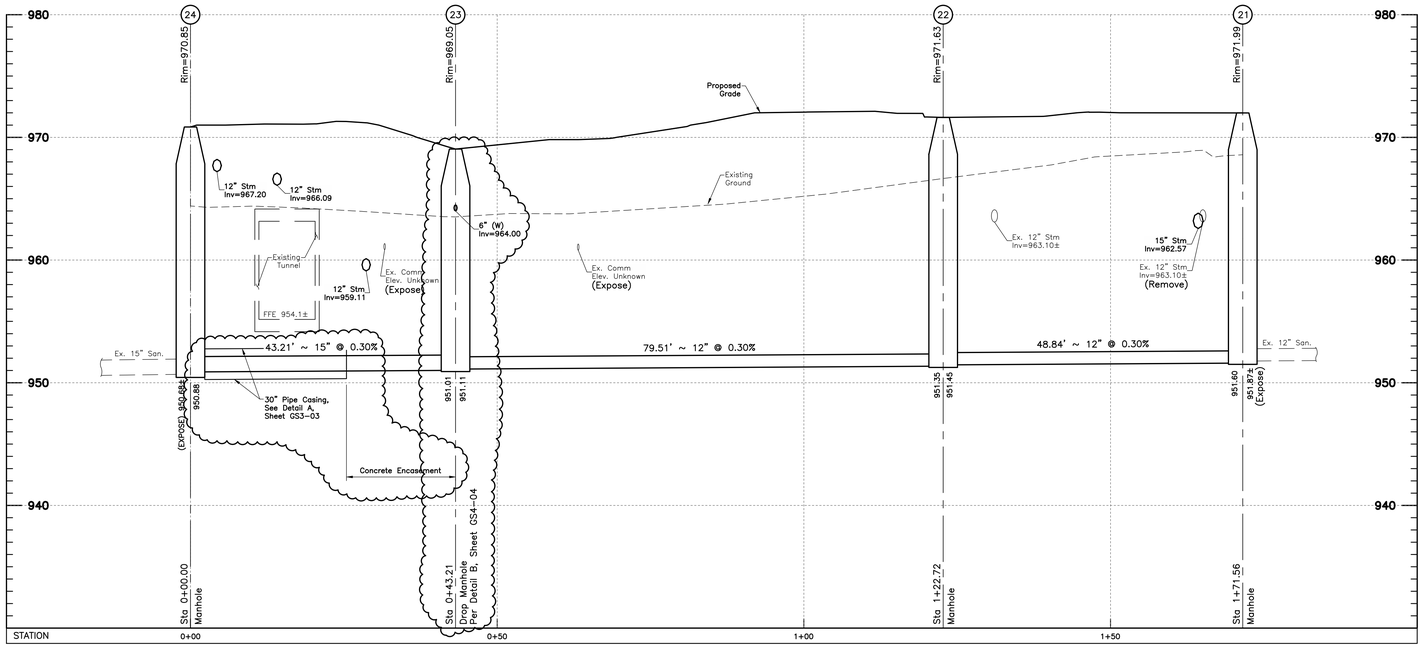

SANITARY PROFILE 21-24
Horizontal Scale: 1" = 10'
Vertical Scale: 1"=5'

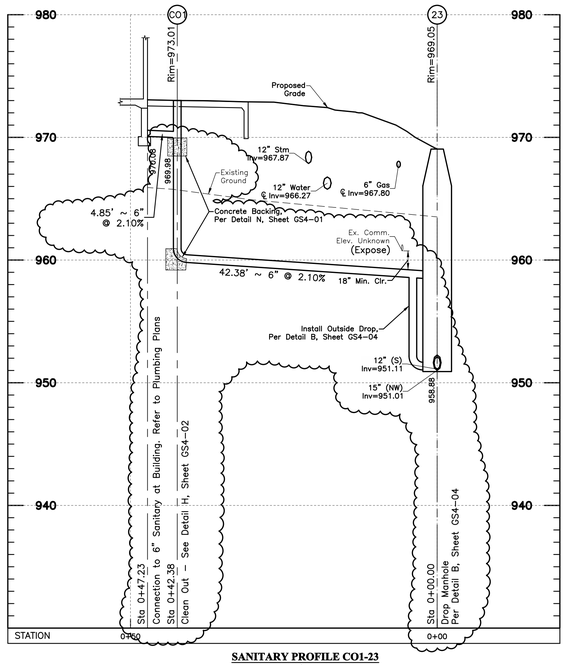

SANITARY PROFILE CO1-23
Horizontal Scale: 1" = 10'
Vertical Scale: 1"=5'

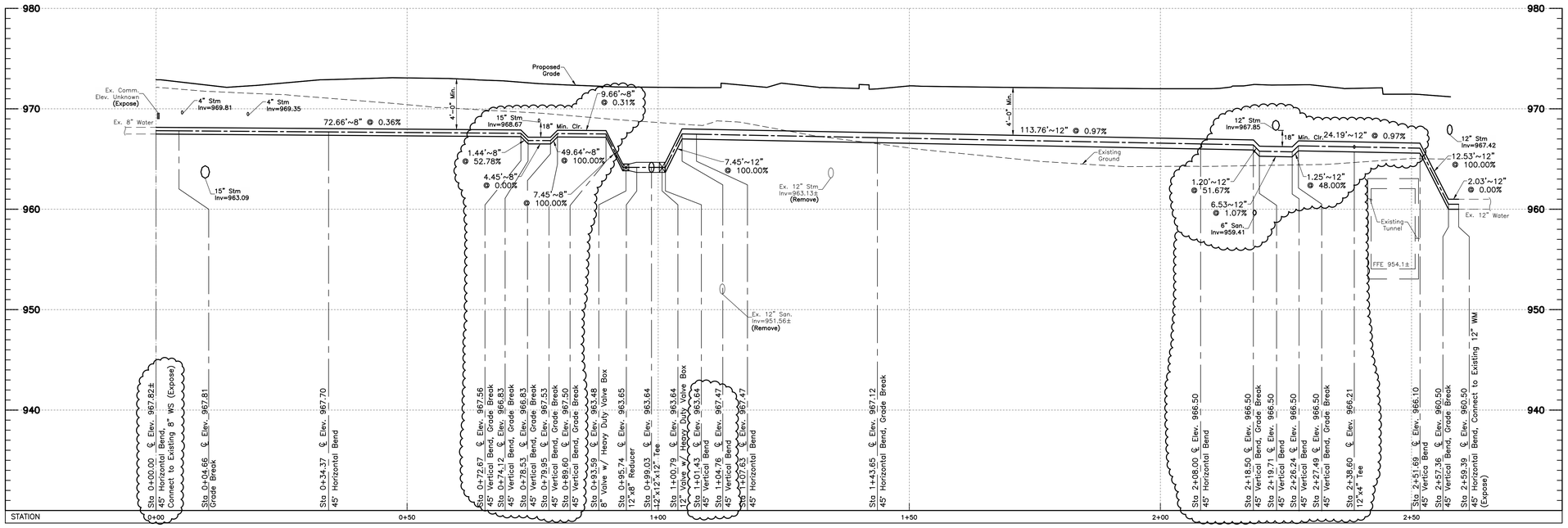

WATER PROFILE 0+00 TO 2+59.39
Horizontal Scale: 1" = 10'
Vertical Scale: 1"=5'

DESIGNER/ENGINEER
CAD OPERATOR
QAQC/CHECKER

Revisions	Date
Issued For Bid	02/28/2012
Pre Bid Amendment	05/10/2012

EMH&T
Evans, Mechwart, Hambleton & Tilton, Inc.
Engineers • Surveyors • Planners • Scientists
5500 New Albany Road, Columbus, OH 43054
Phone: 614.775.4500 Toll Free: 888.775.3648
emht.com

STATE OF OHIO — CHRISTOPHER M. FLEMING E-64019 — REGISTERED PROFESSIONAL ENGINEER
Professional Seal

Revised By:

Drawing Title: UTILITY PROFILES
SCALE: NTS

Approved: Project Manager: MARK PERMELIA
Approved: Service Chief: GARY ABREU

Project Title: OPEN MRI SITE PREP
Building Number: 335
Checked: EMH&T
Drawn:
Location: 4100 WEST THIRD STREET DAYTON, OH 45428

Date: 02/28/2012
Project No. 552-CSI-101
Drawing No. GS3-02

VAMC, DAYTON
VA Department of Veterans Affairs

VA FORM 08-6231, OCT 1978

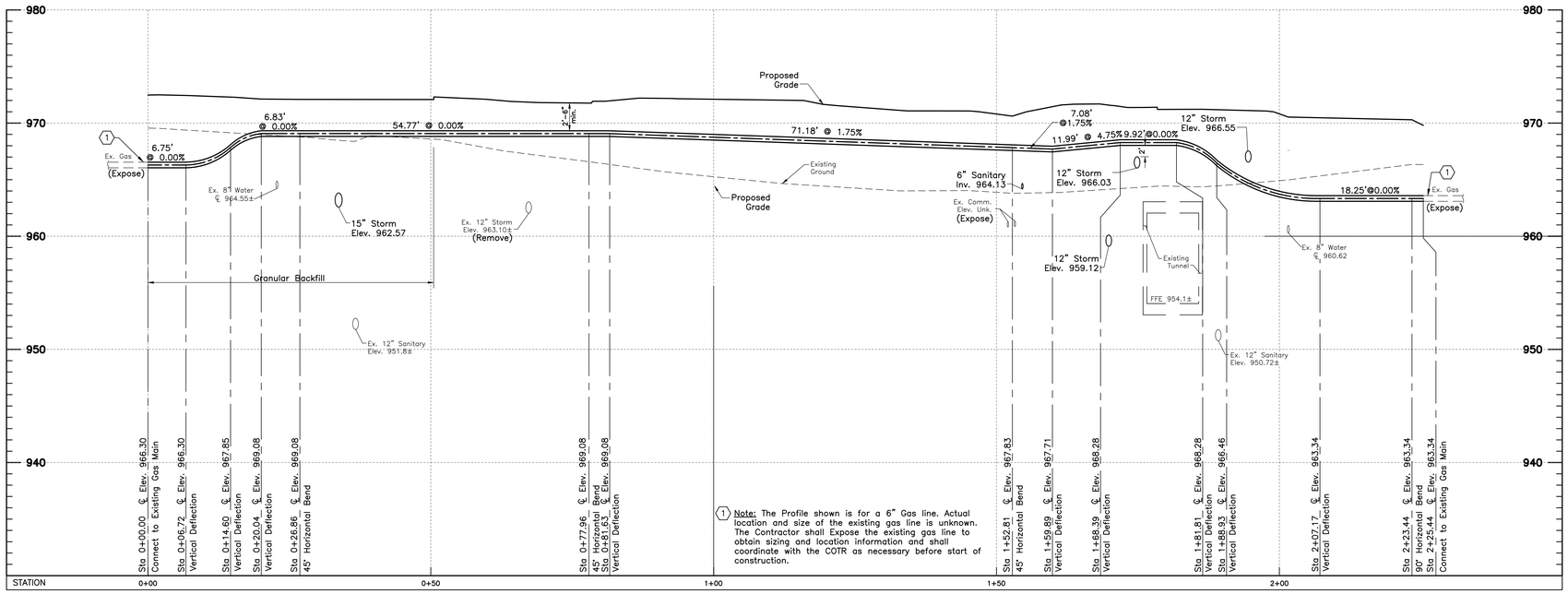

1 Note: The Profile shown is for a 6" Gas line. Actual location and size of the existing gas line is unknown. The Contractor shall Expose the existing gas line to obtain sizing and location information and shall coordinate with the COTR as necessary before start of construction.

GAS PROFILE 0+00 TO 2+25.44
Horizontal Scale: 1" = 10'
Vertical Scale: 1"=5'

Notes:

1. All Backfill shall be per Section 31 20 00, unless otherwise noted on profile.
2. Maintain 12" minimum vertical clearance between gas and all other utilities.

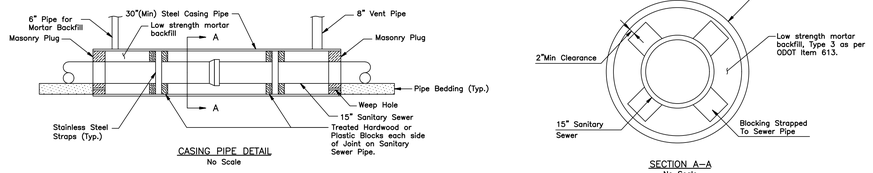

CASING PIPE DETAIL
No Scale

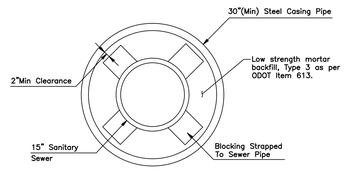

SECTION A–A
No Scale

Notes

1. Weld all casing pipe joints.
2. Blocking to be 6" long banded to each length of pipe, 6'–0" c/c. Allow 2" minimum clearance between blocks and casing pipe.
3. Provide steel casing pipe meeting ASTM Specifications 35,000 PSI yield strength and 60,000 PSI tensile strength, or approved equal, to serve as a casing for the sanitary main. Install casing pipe within the limits and at the location shown on the plans. Coat the casing pipe per the manufacturer's recommendations for Coal Tar Epoxy coating. Repair damage to the coating per the manufacturer's recommendations. Provide steel casing pipe with a minimum wall thickness of 0.375 inches unless otherwise approved by the COTR.
4. Place the casing pipe using industry standards for driving or tunneling methods. Properly size and locate boring pits based on existing field conditions, including all utilities. Repair and damages that result from the installation of the casing pipe at no additional cost to the COTR. Prior to installing the casing pipe, submit a plan of means and methods for the installation of the casing pipe.

A DETAIL
CASING PIPE
(No Scale)

DESIGNER/ENGINEER
CAD OPERATOR
QAQC/CHECKER

Revisions	Date
Issued For Bid	02/28/2012
Pre Bid Amendment	05/10/2012

EMH&T
Evans, Mechwart, Hambleton & Tilton, Inc.
Engineers • Surveyors • Planners • Scientists
5500 New Albany Road, Columbus, OH 43054
Phone: 614.775.4500 Toll Free: 888.775.3648
emht.com

STATE OF OHIO
CHRISTOPHER M. FLEMING
E-64019
REGISTERED PROFESSIONAL ENGINEER
Professional Seal

Revised By:

Drawing Title: UTILITY PROFILES
SCALE: NTS
Approved: Project Manager: MARK PERMELIA
Approved: Service Chief: GARY ABREU

Project Title: OPEN MRI SITE PREP
Building Number: 335
Checked: EMH&T
Drawn:
Location: 4100 WEST THIRD STREET DAYTON, OH 45428

Date: 02/28/2012
Project No. 552–CSI–101
Drawing No. GS3-03

VAMC, DAYTON
VA Department of Veterans Affairs

VA FORM 08–6231, OCT 1978

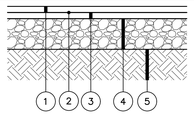

1. ODOT Item 448, 1 1/2" Asphalt Concrete Surface Course, PG 64-22
2. ODOT Item 407, Tack Coat, Applied At A Rate Of 0.10 Gal. Per Sq. Yd.
3. ODOT Item 448, 2 3/4" Asphalt Concrete Intermediate Course, Type 2, PG 64-22
4. ODOT Item 304, 8" Aggregate Base
5. ODOT Item 204, Compacted Subgrade

NOTES

1. Pavement design to be verified by geotechnical engineer prior to construction

A DETAIL
LIGHT DUTY ASPHALT PAVEMENT SECTION (NO SCALE)

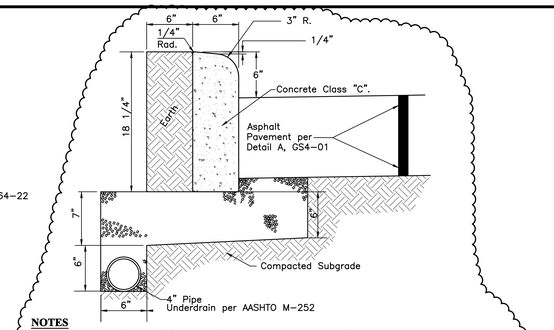

NOTES

1. All exposed surfaces of Concrete Curb shall have a broom finish, unless placed by a curb machine.
2. If the bottom of the subgrade is more than 7" below the bottom of the curb, the underdrain shall be adjusted to keep the top of the underdrain at least 2" below the subbase.
3. Subgrade compaction shall be completed before underdrain installation.
4. When curb and gutter inlet is installed, the top of the bonnet shall be the same as the top of curb elevation. The edge of pavement elevation shall be 3/8" higher than the grate wherever they meet/touch.
5. For replacement work, the curb shall be removed at an existing joint or no closer than 5' from and existing joint.
6. 1/2" Expansion material will be installed behind the curb when a concrete, walk, drive, or other concrete item is adjoining it.

B DETAIL
STRAIGHT 18" CURB (NO SCALE)

NOT USED

C DETAIL
(No Scale)

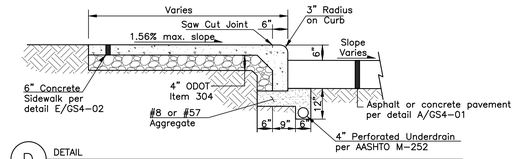

D DETAIL
FULL HEIGHT COMBINATION CONCRETE CURB & SIDEWALK (No Scale)

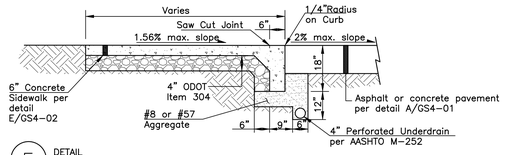

E DETAIL
FLUSH COMBINATION CONCRETE CURB & SIDEWALK (No Scale)

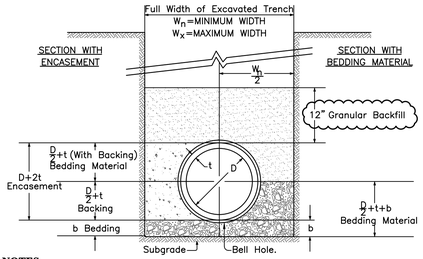

NOTES

1. Sections Symmetrical about ℄.
2. *Dimensions are expressed in inches.
3. Backing or Encasement to be per specification 03 30 00.

Small Diameters b = 4"		
D*	W_n*	W_x*
6	24	48
8	27	48
10	30	48
12	32	48
15	36	50
18	40	53
21	44	57
24	48	60
27	52	64

Mid Diameters b = 6"		
D*	W_n*	W_x*
30	57	67
33	61	71
36	64	74
42	71	81
48	78	88
54	87	95
60	96	102
66	105	127

Large Diameters b = 6"		
D*	W_n*	W_x*
72	116	134
78	123	141
84	130	148
90	136	155
96	143	162
102	151	169
108	160	176

F DETAIL
BACKFILL – RIGID PIPE (NO SCALE)

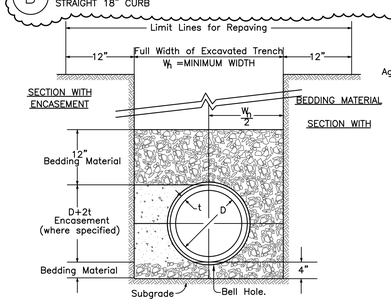

NOTES

1. Sections Symmetrical about ℄.
2. Dimensions are expressed in inches.
3. Encasement to be Class "A" Concrete, per specification section 03 30 00

D*	W_n*	D*	W_n*
6	30	24	48
8	30	27	52
10	30	30	56
12	32	36	64
15	36	42	72
18	40	48	80
21	44		

*Inches

G DETAIL
BACKFILL – FLEXIBLE PIPE (NO SCALE)

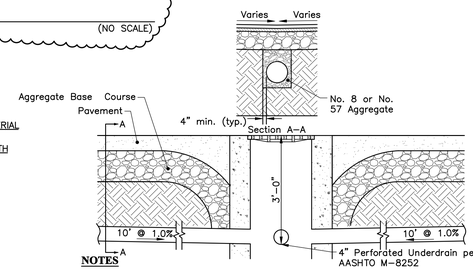

NOTES

1. The Contractor shall initially set the top of casting for an inlet structure within the paved areas to the elevation of the intermediate pavement course, Item 402.
2. Prior to final paving of surface course, Item 402, the Contractor shall adjust the top of casting to finish pavement grade.
3. Extend 4" underdrains 10'-0" in each direction as shown on grading plan. Minimum.
4. The Perforated Pipe shall be protected from heavy traffic after installation prior to placement of proposed pavement.

H DETAIL
TYPICAL SECTION FOR STRUCTURES WITHIN PAVEMENT (NO SCALE)

NOT USED

I DETAIL
(NO SCALE)

NOT USED

J DETAIL
(NO SCALE)

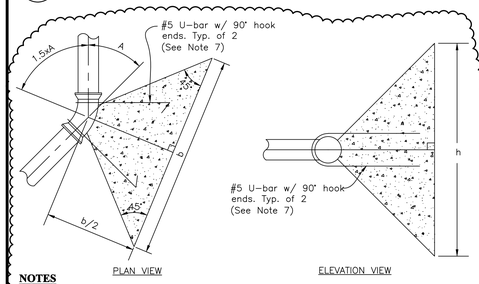

NOTES

1. Bearing surface should, where possible, be placed against undisturbed soil. Where it is not possible, the fill between the bearing surface and undisturbed soil must be compacted to the allowable soil bearing pressure of 3000 psf.
2. Thrust blocks are designed based on 3000 psf allowable soil bearing pressure and 225 psi pipe pressure.
3. Thrust blocks are designed per NFPA 24, 1995 Edition design standards. Thrust forces were calculated using Table A-8-6.2 of NFPA 24.
4. Due to varying field conditions these drawings in no way insure the performance of the pipe joints. The installation and guarantee remain the sole responsibility of the Contractor.
5. Rebar, where required, shall be 60 ksi steel with epoxy coating or other owner approved coating to protect from corrosion.
6. Concrete shall be Class C or G per CMSC, Item 499.
7. Rebar shall be placed in vertical sag bends only.

CONCRETE BACKING REQUIRED								
Bend Angle (A)	90° Bend		45° Bend		22.5° Bend		11.25° Bend	
Pipe Dia.	h	b	h	b	h	b	h	b
6"	2'-0"	3'-0"	1'-6"	2'-3"	1'-1"	1'-7"	0'-9"	1'-2"
8"	2'-7"	3'-11"	1'-11"	2'-11"	1'-4"	2'-1"	1'-0"	1'-6"
10"	3'-3"	4'-10"	2'-4"	3'-7"	1'-8"	2'-6"	1'-2"	1'-10"
12"	3'-10"	5'-9"	2'-10"	4'-3"	2'-0"	3'-0"	1'-5"	2'-2"

K DETAIL
THRUST BLOCK FOR HORIZONTAL BENDS AND VERTICAL SAG BENDS (NO SCALE)

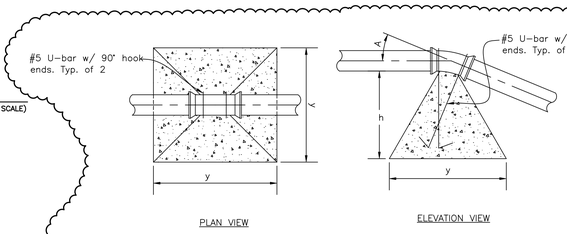

NOTES

1. Bearing surface should, where possible, be placed against undisturbed soil. Where it is not possible, the fill between the bearing surface and undisturbed soil must be compacted to the allowable soil bearing pressure of 3000 psf.
2. Thrust blocks are designed based on 3000 psf allowable soil bearing pressure and 225 psi pipe pressure.
3. Thrust blocks are designed per NFPA 24, 1995 Edition design standards. Thrust forces were calculated using Table A-8-6.2 of NFPA 24.
4. Due to varying field conditions these drawings in no way insure the performance of the pipe joints. The installation and guarantee remain the sole responsibility of the Contractor.
5. Rebar, where required, shall be 60 ksi steel with epoxy coating or other owner approved coating to protect from corrosion.
6. Concrete shall be Class C or G per CMSC, Item 499.

CONCRETE BACKING REQUIRED																	
Bend Angle (A)	90° Bend			45° Bend			22.5° Bend			11.25° Bend							
Pipe Dia.	h	y	Vol. (C.F.)	h	y	Vol. (C.F.)	h	y	Vol. (C.F.)	h	y	Vol. (C.F.)					
6"	4'-6"	9'-0"	119	3'-10"	7'-4"	64	2'-11"	5'-10"	33	2'-4"	4'-0"	17					
8"	5'-5"	0'-10"	205	4'-5"	8'-10"	111	3'-6"	7'-0"	57	2'-10"	5'-8"	29					
10"	6'-2"	12'-4"	308	5'-0"	10'-0"	167	4'-0"	8'-0"	85	3'-3"	6'-6"	43					
12"	6'-11"	13'-10"	435	5'-10"	11'-4"	236	4'-6"	9'-0"	120	3'-7"	7'-2"	61					

L DETAIL
THRUST BLOCK FOR VERTICAL OVER BENDS (NO SCALE)

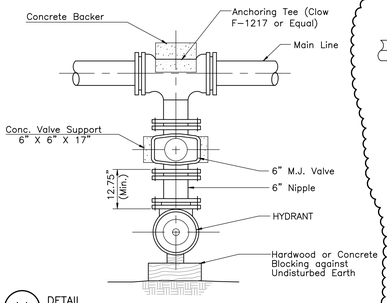

M DETAIL
HYDRANT (NO SCALE)

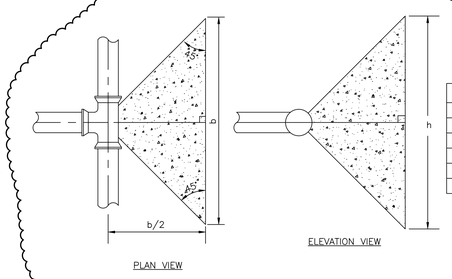

CONCRETE BACKING REQUIRED		
Tee or Plug		
Pipe Dia.	h	b
6"	1'-8"	2'-6"
8"	2'-3"	3'-4"
10"	2'-8"	4'-1"
12"	3'-3"	4'-10"

NOTES

1. Bearing surface should, where possible, be placed against undisturbed soil. Where it is not possible, the fill between the bearing surface and undisturbed soil must be compacted to the allowable soil bearing pressure of 3000 psf.
2. Thrust blocks are designed based on 3000 psf allowable soil bearing pressure and 225 psi pipe pressure.
3. Thrust blocks are designed per NFPA 24, 1995 Edition design standards. Thrust forces were calculated using Table A-8-6.2 of NFPA 24
4. Due to varying field conditions these drawings in no way insure the performance of the pipe joints. The installation and guarantee remain the sole responsibility of the Contractor.
5. Concrete shall be Class C or G per CMSC, Item 499.

N DETAIL
THRUST BLOCK FOR TEES AND PLUGS (NO SCALE)

DESIGNER/ENGINEER
CAD OPERATOR
QAQC/CHECKER

Revisions	Date
Issued For Bid	02/28/2012
Pre Bid Amendment	05/10/2012

EMH&T
Evans, Mechwart, Hambleton & Tilton, Inc.
Engineers • Surveyors • Planners • Scientists
5500 New Albany Road, Columbus, OH 43054
Phone: 614.775.4500 Toll Free: 888.775.3648
emht.com

STATE OF OHIO
CHRISTOPHER M. FLEMING
E-64019
REGISTERED PROFESSIONAL ENGINEER
Professional Seal

Revised By:

Drawing Title: DETAILS
SCALE: NTS

Approved: Project Manager: MARK PERMELIA

Approved: Service Chief: GARY ABREU

Project Title: OPEN MRI SITE PREP

Building Number: 335

Checked: EMH&T

Drawn:

Location: 4100 WEST THIRD STREET DAYTON, OH 45428

Date: 02/28/2012

Project No. 552-CSI-101

Drawing No. GS4-01

VAMC, DAYTON

VA Department of Veterans Affairs

VA FORM 08-6231, OCT 1978

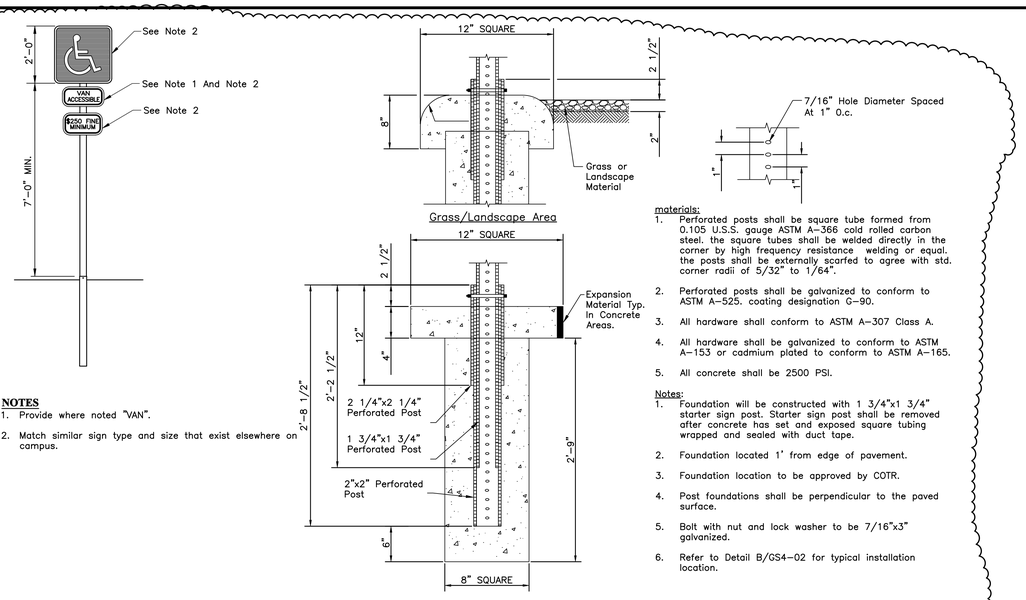

NOTES

1. Provide where noted "VAN".
2. Match similar sign type and size that exist elsewhere on campus.

materials:

1. Perforated posts shall be square tube formed from 0.105 U.S.S. gauge ASTM A-366 cold rolled carbon steel. the square tubes shall be welded directly in the corner by high frequency resistance welding or equal. the posts shall be externally scarfed to agree with std. corner radii of 5/32" to 1/64".
2. Perforated posts shall be galvanized to conform to ASTM A-525. coating designation G-90.
3. All hardware shall conform to ASTM A-307 Class A.
4. All hardware shall be galvanized to conform to ASTM A-153 or cadmium plated to conform to ASTM A-165.
5. All concrete shall be 2500 PSI.

Notes:

1. Foundation will be constructed with 1 3/4"x1 3/4" starter sign post. Starter sign post shall be removed after concrete has set and exposed square tubing wrapped and sealed with duct tape.
2. Foundation located 1' from edge of pavement.
3. Foundation location to be approved by COTR.
4. Post foundations shall be perpendicular to the paved surface.
5. Bolt with nut and lock washer to be 7/16"x3" galvanized.
6. Refer to Detail B/GS4-02 for typical installation location.

A DETAIL
TYPICAL SIGN POST AND HANDICAP SIGN (NO SCALE)

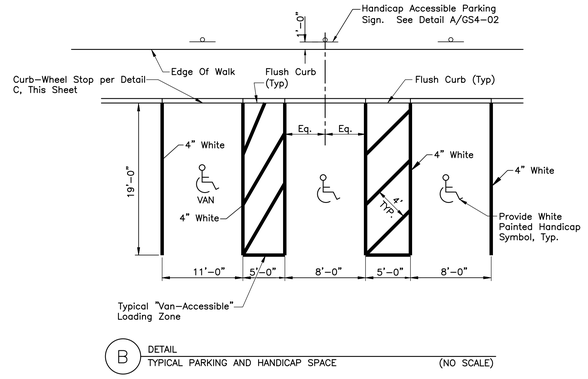

B DETAIL
TYPICAL PARKING AND HANDICAP SPACE (NO SCALE)

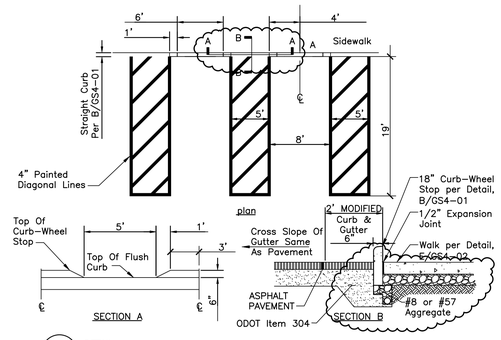

C DETAIL
COMBINATION CURB-WHEEL STOP (NO SCALE)

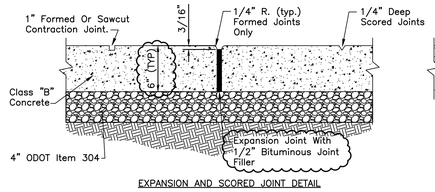

EXPANSION AND SCORED JOINT DETAIL

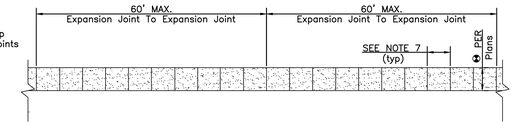

PLAN

NOTES

1. Expansion joints shall be provided where sidewalk abuts concrete driveways, curb or other adjacent structures.
2. One-half inch bituminous joint filler shall be installed at expansion joint locations and shall extend the full depth of the concrete.
3. 1" Deep contraction joints shall be placed at intervals of approximately 15' or at a spacing that matches the adjacent curb.
4. Formed contraction joints shall be finished with a tool having a 1/4" radius.
5. Scored Joints shall be 1/4" deep and spaced at 6' [1829mm] or equal to sidewalk width or match scored joints of adjacent curb.
6. Concrete shall be finished by means of a float, steel trowelled and broomed with a fine brush in a transverse direction.
7. Where sidewalk abuts building, refer to Structural Drawings for turn-down slab and connection details.

E DETAIL
CONCRETE SIDEWALK (NO SCALE)

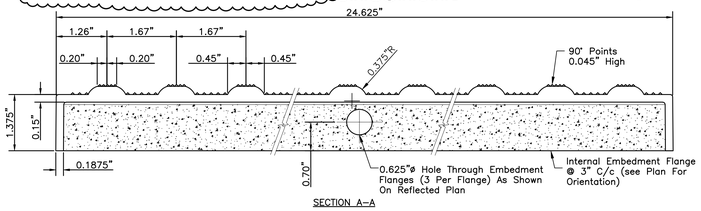

SECTION A–A

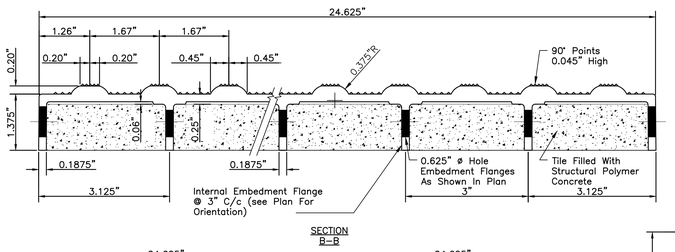

SECTION B–B

DETECTABLE WARNING NOTES

1. The Detectable Warning Strip Must Cover The Entire Width Of The Ramp Opening, Excluding The Wings.
2. All Domes Must Be Aligned In The Direction Of Travel.

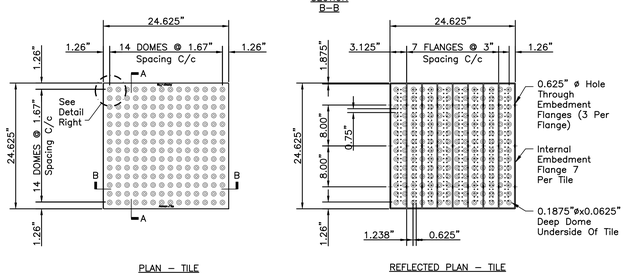

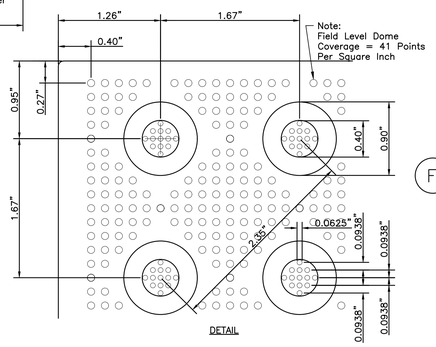

D DETAIL
TRUNCATED DOME TACTILE – WARNING STRIP (NO SCALE)

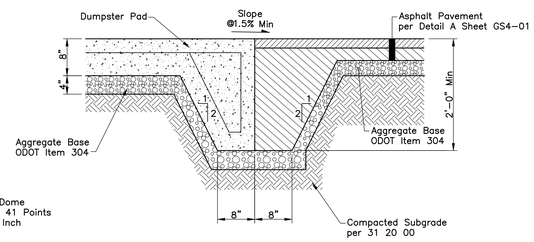

NOTE

1. Contractor shall provide turndown anywhere asphalt and concrete pavement meet.

F DETAIL
CONCRETE DUMPSTER PAD/ASPHALT TURNDOWN (No Scale)

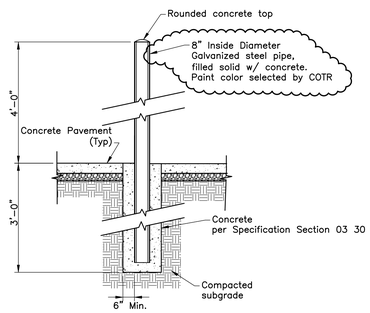

G DETAIL
PIPE BOLLARD DETAIL (No Scale)

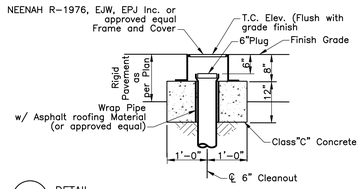

H DETAIL
CLEANOUT CASTING DETAIL (IN PAVEMENT) (No Scale)

DESIGNER/ENGINEER
CAD OPERATOR
QAQC/CHECKER

Revisions	Date
Issued For Bid	02/28/2012
Pre Bid Amendment	05/10/2012

EMH&T
Evans, Mechwart, Hambleton & Tilton, Inc.
Engineers • Surveyors • Planners • Scientists
5500 New Albany Road, Columbus, OH 43054
Phone: 614.775.4500 Toll Free: 888.775.3648
emht.com

STATE OF OHIO
CHRISTOPHER M. FLEMING
E-64019
REGISTERED PROFESSIONAL ENGINEER
Professional Seal

Revised By:

Drawing Title: DETAILS (SCALE: NTS)	Project Title: OPEN MRI SITE PREP
Approved: Project Manager: MARK PERMELIA	Building Number: 335 / Checked: EMH&T / Drawn:
Approved: Service Chief: GARY ABREU	Location: 4100 WEST THIRD STREET DAYTON, OH 45428
Date: 02/28/2012	Project No.: 552-CSI-101
Drawing No.: GS4-02	

VAMC, DAYTON
VA Department of Veterans Affairs

VA FORM 08-6231, OCT 1978

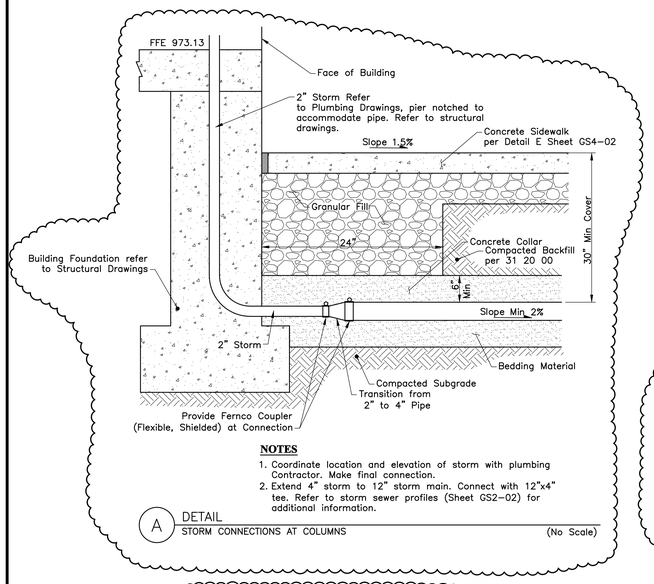

NOTES

1. Coordinate location and elevation of storm with plumbing Contractor. Make final connection.
2. Extend 4" storm to 12" storm main. Connect with 12"x4" tee. Refer to storm sewer profiles (Sheet GS2-02) for additional information.

A DETAIL
STORM CONNECTIONS AT COLUMNS (No Scale)

NOT USED

B DETAIL
(No Scale)

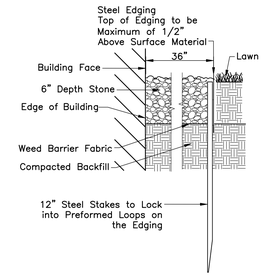

NOTE

1. Provide 1 ½" to 3 ½" diameter smooth river rock. Rock color per detail plans on Sheet GS1-01.
2. Install stone once adjacent grass areas are established.
3. Any sediment and clayey/silty material in stone should be removed immediately.

C DETAIL
36" WIDE STONE MOW STRIP (No Scale)

NEW BUILDING SIGN

LOCATION: Adjacent to new building. confirm final location with COTR.

NEW BUILDING DIRECTIONAL SIGN

LOCATION: Adjacent to main road, south of parking lot. Confirm final location with COTR.

UPDATE EXISTING CAMPUS WAYFINDING SIGNAGE

LOCATION: Typical of (3) locations. Confirm signs to be altered with COTR.

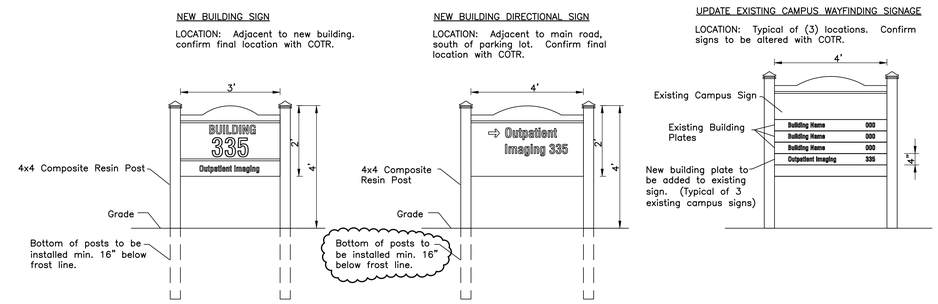

NOTES

1. All dimensions are approximate. Confirm dimensions with existing campus signage.
2. Select sign, accent, font colors and font to match existing campus signage.

F DETAIL
EXTERIOR SIGN (No Scale)

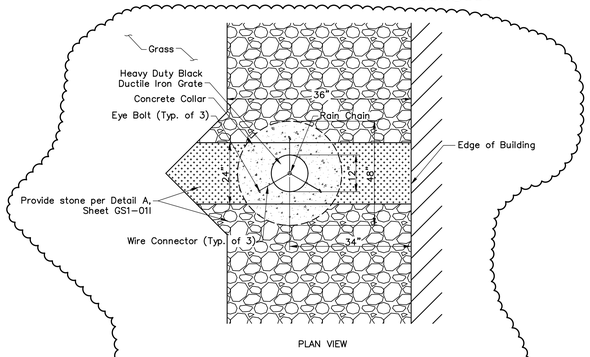

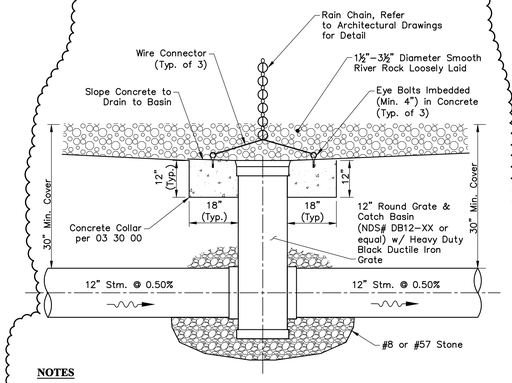

NOTES

1. Provide silt fence at each structure until adjacent grass is established and stone is installed.
2. Refer to sheet Detail A, Sheet GS1-01 for river rock color detail.
3. Concrete color shown in plan view for location of area drain. Backfill entire area drain with river rock to finish grades per grading plan.

D DETAIL
AREA DRAIN (No Scale)

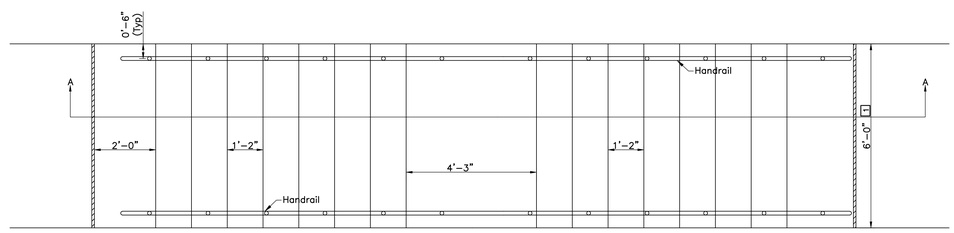

Plan View

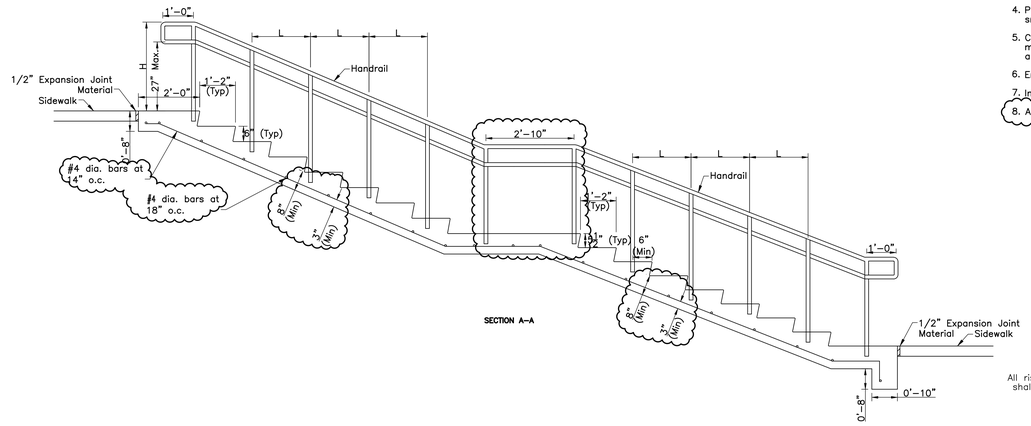

SECTION A-A

NOTES

1. TYPE A: Fabricate hand railing and stair posts from nominal size 1 ½" diameter 0.145" wall thickness steel pipe meeting the requirements of the Specification for Welded and Seamless Steel Pipe ASTM A 53 Standard Weight. Schedule Number 40, or aluminum pipe meeting the requirements of the Specification for Aluminum-Alloy Pipe ASTM B 241, 6063 T6 ASA, Schedule Number 40.
2. Galvanize steel handrails and stair posts after fabrication, as specified in ASTM A 123. Field weld splices for steel railing. Re-galvanize areas on which the spelter coating has been damaged, as specified in AASHTO M 36, Section 24. Metalizing process or repair under the direction of the COTR with stick-form galvanizing repair compound meeting Federal Specification O-G-93.
3. Install one handrail to each side of the stairs (two total), facing up, unless otherwise shown on the plans.
4. Provide splices for aluminum railing with internal sleeves, and after welding, be smooth and water tight.
5. Cast-in-place or set stair posts in sockets filled with 1:3 proportioned cement mortar. Provide a heavy coating of asphalt varnish or coal-tar pitch paint (both inside and outside) to the portion of aluminum stair posts set into concrete or mortar.
6. Embed the stair posts a minimum depth 4".
7. Install stair posts and handrails free of burrs, or sharp projections.
8. All railing dimensions are from the ℄ of pole.

LEGEND

H ≈ 34" min., 35" max.
R ≈ 5¼" or 6"
T ≈ 14"
[1] Interior panel lengths are equal. The upper and lower panel lengths may vary. Panel lengths are not to exceed 3'-0".
[1] Unless shown otherwise on the plans.

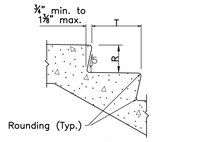

NOSING DETAIL
All risers shall be of equal height and all treads shall be of equal depths on any set of stairs.

E DETAIL
STAIR DETAIL (No Scale)

DESIGNER/ENGINEER
CAD OPERATOR
QAQC/CHECKER

Revisions	Date
Issued For Bid	02/28/2012
Pre Bid Amendment	05/10/2012

EMH&T
Evans, Mechwart, Hambleton & Tilton, Inc.
Engineers • Surveyors • Planners • Scientists
5500 New Albany Road, Columbus, OH 43054
Phone: 614.775.4500 Toll Free: 888.775.3648
emht.com

STATE OF OHIO
CHRISTOPHER M. FLEMING
E-64019
REGISTERED PROFESSIONAL ENGINEER
Professional Seal

Revised By:

Drawing Title: DETAILS (SCALE: NTS)	Project Title: OPEN MRI SITE PREP
Approved: Project Manager: MARK PERMELIA	Building Number: 335 / Checked: EMH&T / Drawn:
Approved: Service Chief: GARY ABREU	Location: 4100 WEST THIRD STREET DAYTON, OH 45428
Date: 02/28/2012	Project No. 552-CSI-101
Drawing No. GS4-03	VAMC, DAYTON

Department of Veterans Affairs

VA FORM 08-6231, OCT 1978

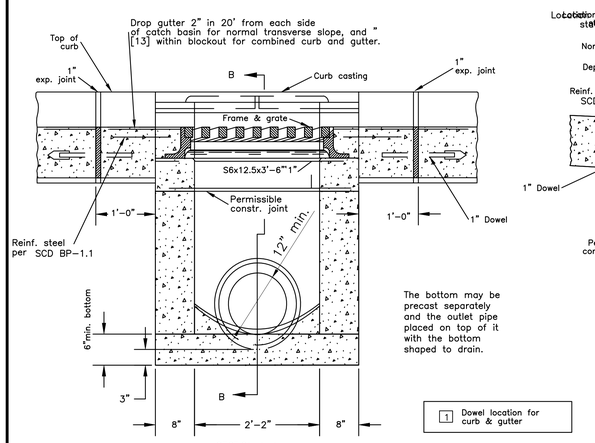

SECTION A–A

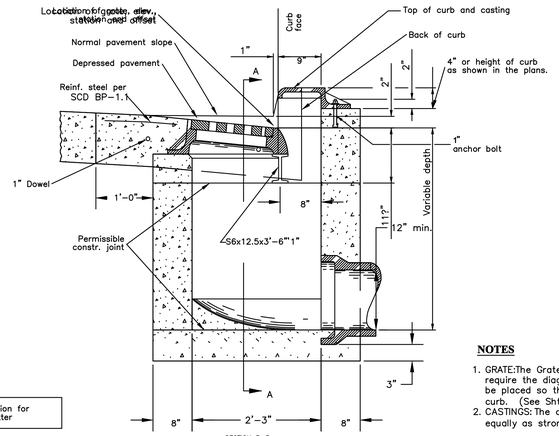

SECTION B–B
WITH CURB
(2" DEPRESSION)

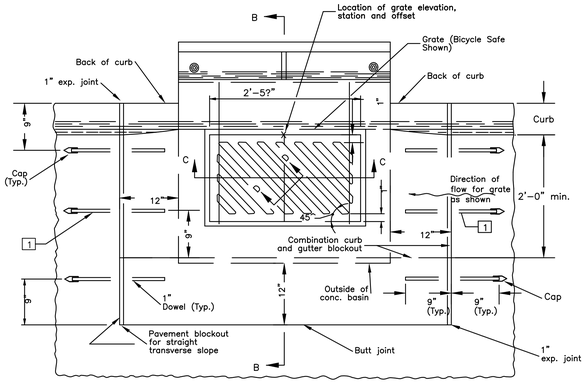

PLAN OF CATCH BASIN AND PAVEMENT JOINTS
(For SECTIONS C–C and D–D, see Sht. 2/2)

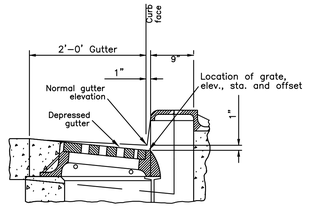

SECTION B–B
WITH CURB & GUTTER
(1" DEPRESSION)

CATCH BASIN No. 3A

NOTES

1. GRATE:The Grate "V" shall be provided unless the plans specifically require the diagonal grate. If the diagonal grate is specified, it shall be placed so that the diagonal bars direct drainage flow toward the curb. (See Sht. 2/2.)
2. CASTINGS: The design shall be essentially the same CASTINGS: and equally as strong as those shown. Minimum weight [mass]:

   Curb Casting . . . . . 170 lbs. [77 kg]
   Standard Grate . . . . 127 lbs. [57 kg],
   Frame . . . . . 320 lbs. [145 kg], and
   Grate "V" . . . . . 105 lbs. [47 kg].

3. Lighter weight frames and grates that meet the requirements of CMS 711.14 may also be provided. Grate openings and dimensions shall not differ from those shown unless otherwise shown in the plans. The following text shall be cast into the top of the curb casting:

   "DUMP NO WASTE" and "DRAINS TO WATERWAY"

   Text shall be printed in bold, capital letters with a minimum height of *f*". See example on Plan (Sht. 2/2). "WATERWAY" may be substituted with "STREAM", "RIVER","LAKE", etc. Actual placement and logo may vary per manufacturer.
4. BEARING AREAS: The frame and grate shall be so fitted and finished as to provide a firm and even seat. No projections shall exist on bearing areas of either casting, and the grate shall seat in its frame without rocking.
5. WALLS: When used in place of concrete, brick side walls shall be 8" [200] nominal thickness.
6. PRECAST CONSTRUCTION: Permitted, except for the apron. Concrete shall meet the requirement of CMS 706.13. Precast walls shall have a minimum thickness of 6" [150] and reinforcing shall be suf–ficient to permit shipping and placement without damage. The wall thickness reduction shall be from the outside.
7. MINIMUM DEPTH: The minimum depth is per the cover requirements for that pipe type.

1: OPENINGS: Any pipe openings greater than 4" [100] from the outside of the pipe to the structure require the Engineer's approval. Fill all voids per CMS 604.

2: DOWELS: Four 1"x18" [25x450] dowels are required for concrete pavement or gutter blockout. See SCD BP–2.2 for dowel details.

10. BLACKOUT: Blockouts shall be paved with Class C concrete in PCC pavement or gutter and paid for as a part of the pavement or gutter with no de– duction in pavement, curb or gutter quantities because of the castings. A Class C concrete apronthe size of the 2'–0" [600] gutter shall be cast–in–place in asphalt pavement (no dowels required) with the cost included in the catch basin bid price. No deduction to be made in curb quantities.
11. PAYMENT: All materials and labor, including excavation and backfilling, shall be paid for under Item 604– Catch Basin, No. 3A.

A DETAIL
CURB & GUTTER INLET (ODOT CATCH BASIN NO. 3A, STD DWG CB–2.2)

(No Scale)

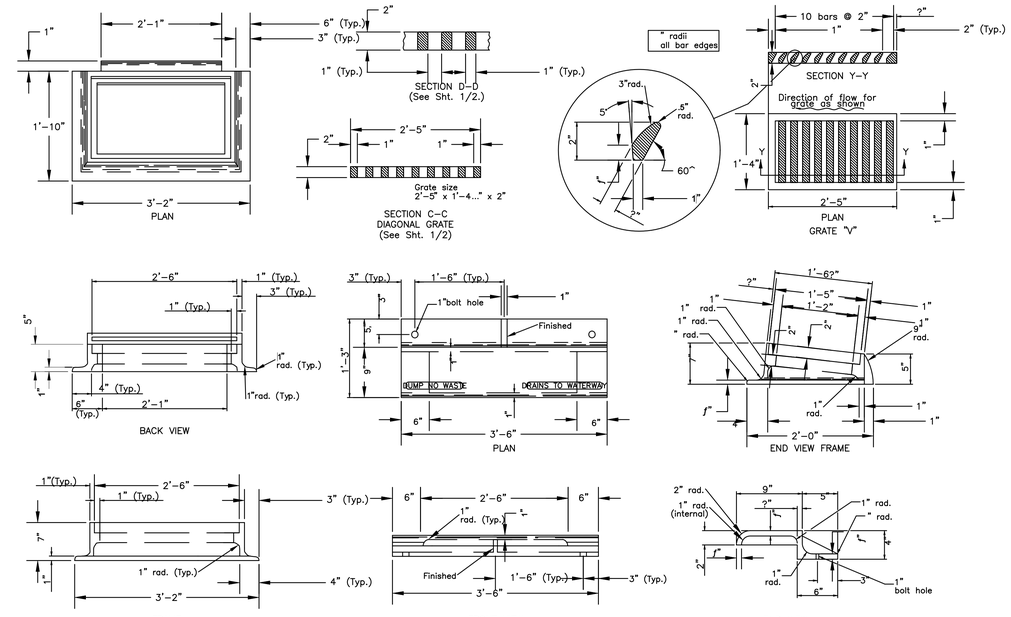

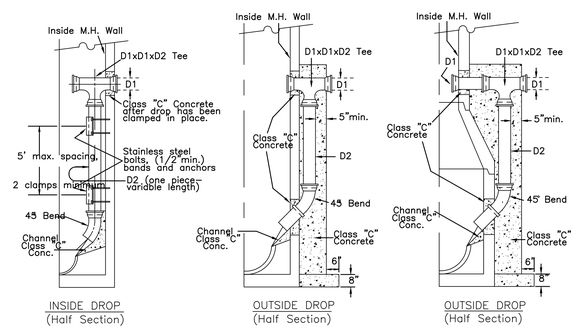

NOTES

1. Drop is required when invert differential is 24 inches or greater.
2. Height of drop pipe is to be as shown on the plans or will be determined at the time of construction.
3. All work and materials required to construct the inside or outside drop should be included for payment under Item 604, Manholes, or Item 901, Pipe Sewers Complete In Place.
4. Where called for, and unless otherwise required by the plans, the Outside Drop will be constructed with new manholes.
5. Materials for the Tee, Drop Pipe and Bend shall be of one type and be one of the following– Inside Drop: Cast Iron, or PVC. Outside Drop: C.I. Soil, Vit. Sewer, or PVC.
6. Outside Drop pipes require a 5" thick(minimum) Class "C" Concrete encasement on three sides of pipe and tied to manhole wall with 5/8"–"U" rods x 6" long @ 12".
7. Inside Drop may be used on new construction provided that 60" base and riser sections are used.

Pipe Diameter	
D1	D2
8"	8"
10"	8"
12"	8"
15"	10"
18"	10"
21"	12"
24"	12"

B DETAIL
DROP MANHOLE

(No Scale)

DESIGNER/ENGINEER
CAD OPERATOR
QAQC/CHECKER

Revisions	Date
Issued For Bid	02/28/2012
Pre Bid Amendment	05/10/2012

EMH&T
Evans, Mechwart, Hambleton & Tilton, Inc.
Engineers • Surveyors • Planners • Scientists
5500 New Albany Road, Columbus, OH 43054
Phone: 614.775.4500 Toll Free: 888.775.3648
emht.com

STATE OF OHIO
CHRISTOPHER M. FLEMING
E–64019
REGISTERED PROFESSIONAL ENGINEER
Professional Seal

Revised By:
– – –

Drawing Title: DETAILS
SCALE: NTS

Approved: Project Manager: MARK PERMELIA
Approved: Service Chief: GARY ABREU

Project Title: OPEN MRI SITE PREP
Building Number: 335
Checked: EMH&T
Drawn:
Location: 4100 WEST THIRD STREET, DAYTON, OH 45428

Date: 02/28/2012
Project No. 552–CSI–101
Drawing No. GS4-04

VAMC, DAYTON
VA Department of Veterans Affairs

VA FORM 08–6231, OCT 1978

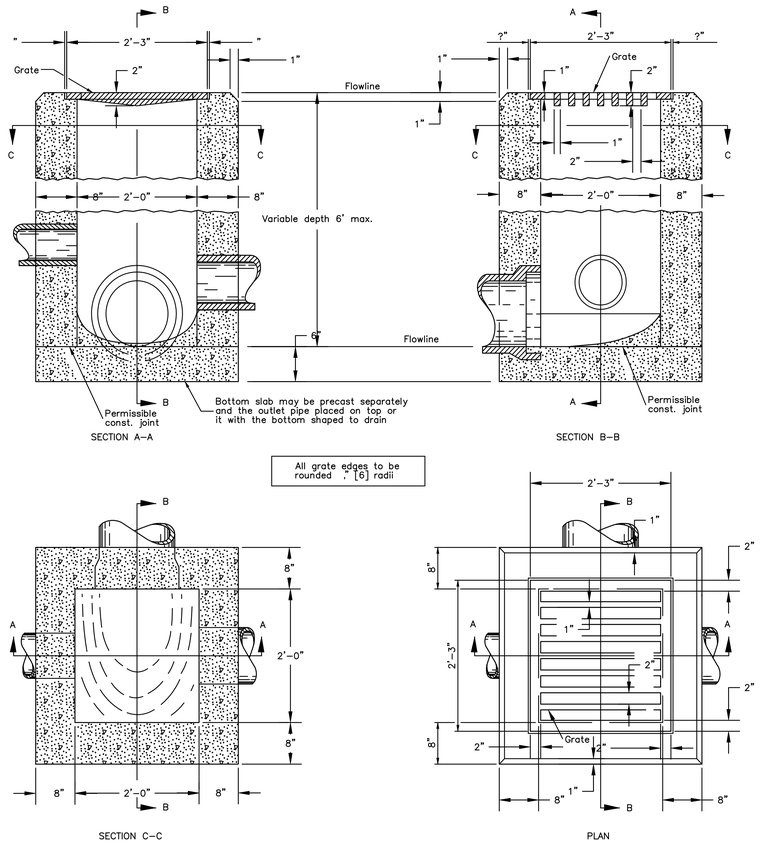

NOTES

1. GRATE: The design shall be essentially the same and equally as strong as the one shown (see Construction Information table), or meet the requirements of CMS 711.14. Grate openings and dimensions shall not differ from those shown here unless otherwise shown in the plans.
2. If necessary, bicycle safe grates shall be specified in the plans. Bicycle safe grates shall be Neenah No. R-4859-C or East Jordan No. 5110 Type M3 or approved equals.
3. As of January 1, 2003, the following text shall be cast into the top of the grate:

   "DRAINS TO WATERWAY" and "DUMP NO WASTE"

   Text shall be printed in bold, capital letters with a minimum height of ". "WATERWAY" may be substituted with "STREAM", "RIVER", "LAKE", etc. Actual placement and logo may vary per manufacturer.
4. Brick or cast-in-place walls have a nominal thickness of 8". Precast walls shall have a minimum thickness of 6" and be reinforced sufficiently to permit shipping and handling without damage.
5. Cast-in-place concrete is to be Class C. All precast concrete shall meet the requirements of CMS 706.13 and marked with the catch basin number.
4. If a precast base is used, it shall be set deep enough so that the top can be placed on the base to provide the grate elevation specified in the plans. Layers of brick shall not be used to adjust the top elevation.
5. When given on the plans, location and elevation are at the top center of the grate. When side openings are provided, the elevation shall be at the flow line of the side inlet.
6. The minimum depth of CB No. 2-2B shall be the outside diameter (O.D.) of the outlet pipe plus 4".
7. Grate elevation is to be placed 4" to 6" below normal ditch returning to normal 10' to 15' each side of inlet.
8. Any pipe openings greater than 4" [100] from the outside of the pipe to the structure require the Engineer's approval. Fill all voids per CMS 604.
9. All materials and labor, including excavation and backfilling, shall be paid for under Item 604 - Catch Basin, No. 2-2B.

CONSTRUCTION INFORMATION
Minimum weight of grate, 120 lbs.

CATCH BASIN	OUTLET PIPE SIZE
2-2A	12" to 21"
2-2B	12" to 21"

A DETAIL
STANDARD 2X2 CATCH BASIN (ODOT CATCH BASIN 2-2B, STD DWG CB-1.1) (No Scale)

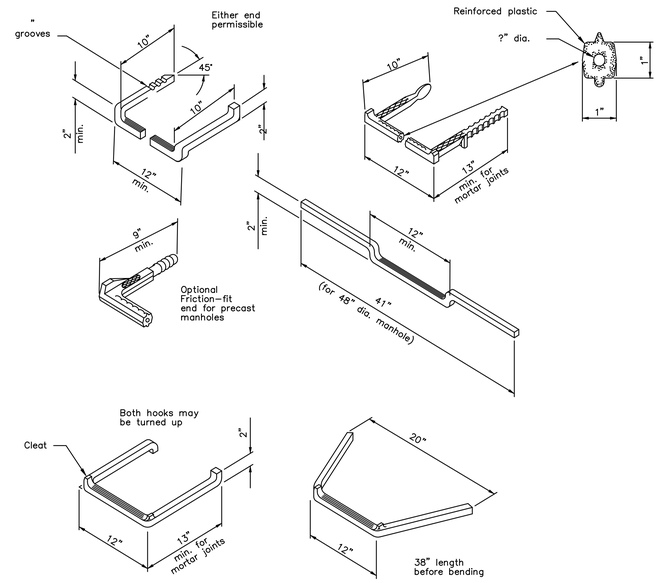

Steps shall have a minimum cross sectional dimension of 1" for ferrous metal f for aluminum.

STEP DETAILS

NOTES

1. Manhole No. 1 is for sewers 30" [760] diameter or less. The design shown is for brick construction with every sixth course a stretcher course. The 6" [150] bottom may be precast or cast-in-place concrete. The bottom channel section shall be built with concrete and lined with split pipe or brick, except curved channels may be formed in the concrete.
2. Precast solid concrete radial blocks or cast-in-place concrete reinforced with #4 bars on 12" centers both vertically and horizontally, may be used with a wall thickness of 6" or greater.
3. Precast manholes detailed on SCD MH-1.2 may be used in lieu of the design shown, unless otherwise specified in the plans.
4. When specified on the plans, the drop shall be constructed as shown on SCD MH-3.1 or per Detail B/GS4-05.
5. Covers for sanitary sewers shall be without the pick and vent holes shown here and shall include a sealing gasket affixed to the bearing surface. Bolt-down covers shall not be used unless specified in the plans.
6. The frame and cover shall meet CMS 711.14 requirements or be a heavy design (475 lbs. min. total weight) when the manhole is placed within the limits of the pavement or shoulder. Otherwise, the light design (275 lbs. min.) may be used. Tearing areas shall be finished smooth and fitted so as to provide a firm and even seat for all portions of the cover in the frame. Each cover shall seat in its frame without rocking and shall be marked as a matched frame and cover before delivery to the project. The base of the frame shall be set in a full bed of Portland cement mortar and adjusted to conform to the finished pavement or shoulder elevation and slope. Castings meeting CMS 604 requirements and designed essentially the same and equally as strong as those shall be provided.
7. Steps shall conform to the material requirements of CMS 604. All steps shall have a depressed tread or a 1/2" [13] minimum cleat height at the ends.
8. Steps installed in fresh concrete shall be embedded to a minimum depth of 4" [100]. Steps installed in mortar joints shall be embedded to a minimum depth or 7".
9. Friction-fit steps meeting the requirements of CMS 711.31 with rebar may be used in precast manholes. The receiving holes for friction-fit steps shall not penetrate the manhole walls.
10. The Engineer may require the contractor to test load a maximum of one step per manhole to a proof load of 400 lbs in direct pull. The equipment and method used shall meet the approval of the Engineer. If the selected step fails the pullout test, the remaining steps in that manhole shall also be tested. All steps not passing the pullout test shall be removed and a new step installed and tested to the satisfaction of the Engineer. Cost of testing shall be incidental to the unit price bid for the manhole.

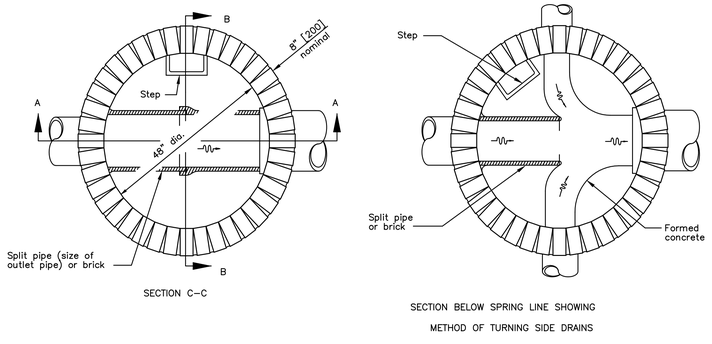

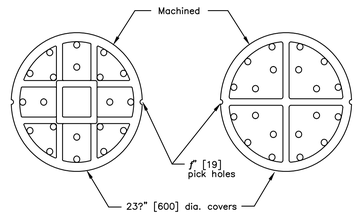

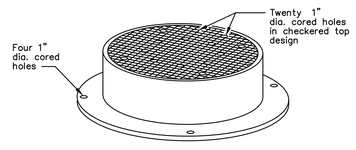

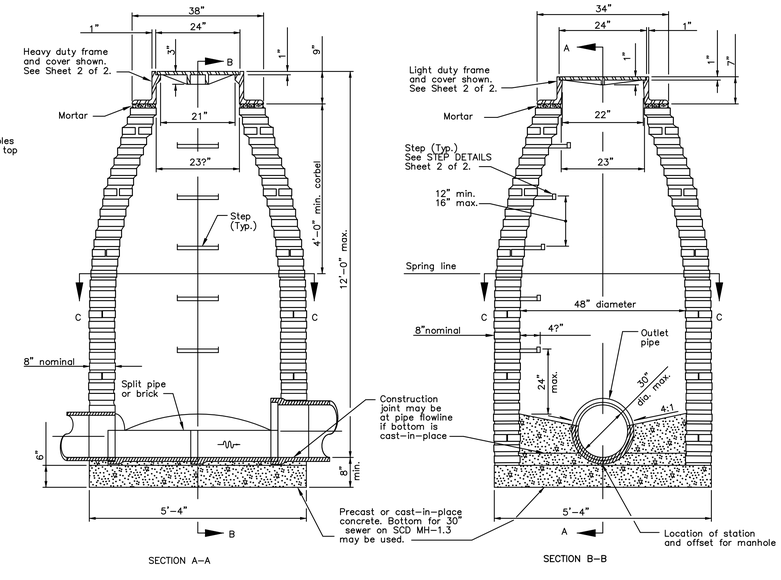

B DETAIL
MANHOLE (ODOT MANHOLE NO. 1, STD DWG MH-1.1) (No Scale)

DESIGNER/ENGINEER
CAD OPERATOR
QAQC/CHECKER

Revisions	Date
Issued For Bid	02/28/2012
Pre Bid Amendment	05/10/2012

EMH&T
Evans, Mechwart, Hambleton & Tilton, Inc.
Engineers • Surveyors • Planners • Scientists
5500 New Albany Road, Columbus, OH 43054
Phone: 614.775.4500 Toll Free: 888.775.3648
emht.com

STATE OF OHIO — CHRISTOPHER M. FLEMING E-64019 — REGISTERED PROFESSIONAL ENGINEER
Professional Seal

Revised By: ---

Drawing Title: DETAILS
SCALE: NTS

Project Title: OPEN MRI SITE PREP

Date: 02/28/2012
Project No. 552-CSI-101

Approved: Project Manager: MARK PERMELIA
Building Number: 335
Checked: EMH&T
Drawn:
Approved: Service Chief: GARY ABREU
Location: 4100 WEST THIRD STREET DAYTON, OH 45428
Drawing No. GS4-05

VAMC, DAYTON
VA Department of Veterans Affairs

VA FORM 08-6231, OCT 1978

GENERAL STRUCTURAL NOTES

GENERAL

1. THE STRUCTURE IS DESIGNED TO BE SELF-SUPPORTING AND STABLE AFTER THE BUILDING IS FULLY COMPLETED. IT IS SOLELY THE CONTRACTOR'S RESPONSIBILITY TO DETERMINE ERECTION PROCEDURE AND SEQUENCE AND TO INSURE THE SAFETY OF THE BUILDING AND ITS COMPONENT PARTS DURING ERECTION. THIS INCLUDES THE ADDITION OF WHATEVER SHORING, SHEETING, TEMPORARY BRACING, GUYS OR TIEDOWNS WHICH MIGHT BE NECESSARY. SUCH MATERIAL SHALL REMAIN THE CONTRACTOR'S PROPERTY AFTER COMPLETION OF THE PROJECT.
2. IT IS SOLELY THE CONTRACTOR'S RESPONSIBILITY TO FOLLOW ALL APPLICABLE SAFETY CODES AND REGULATIONS DURING ALL PHASES OF CONSTRUCTION.
3. MECHANICAL EQUIPMENT LOADS, OPENINGS AND STRUCTURE IN ANY WAY RELATED TO MECHANICAL REQUIREMENTS ARE SHOWN FOR BIDDING PURPOSES ONLY. CONTRACTOR SHALL OBTAIN APPROVAL OF MECHANICAL AND OTHER TRADES BEFORE PROCEEDING WITH SUCH PORTION OF THE WORK. EXCESS COST RELATED TO VARIATION IN MECHANICAL REQUIREMENTS TO BE BORNE BY MECHANICAL CONTRACTOR.
4. SHOULD ANY OF THE DETAILED INSTRUCTIONS SHOWN ON THE PLANS CONFLICT WITH THE GENERAL STRUCTURAL NOTES, THE SPECIFICATIONS OR WITH EACH OTHER, THE STRICTEST PROVISION SHALL GOVERN.
5. GOVERNING CODE: 2007 OHIO BUILDING CODE.
6. DESIGN LOADS:

FLOOR LIVE LOADS: (WITH REDUCTIONS PER 1607.9 WHERE APPLICABLE)
- FUTURE FLOOR — 80 PSF

ROOF LIVE LOADS: (IN ACCORDANCE WITH 1607.11)
- FLAT ROOFS — 20 PSF

SNOW LOADS: (IN ACCORDANCE WITH 1608)
- GROUND SNOW LOAD (Pg) — 20 PSF
- FLAT ROOF SNOW LOAD (Pf) — 22 PSF
- SNOW EXPOSURE FACTOR (Ce) — 1.0
- SNOW LOAD IMPORTANCE FACTOR (Is) — 1.1
- THERMAL FACTOR (Ct) — 1.0

WIND LOADS: (IN ACCORDANCE WITH 1609)
- BASIC WIND SPEED (V) — 90 MPH
- WIND IMPORTANCE FACTOR (Iw) — 1.15
- EXPOSURE CATEGORY — EXPOSURE C
- INTERNAL PRESSURE COEFFICIENT (Gcpi) — +/- 0.18

SEISMIC LOADS: (IN ACCORDANCE WITH 1613)
- SEISMIC USE GROUP — III
- SEISMIC IMPORTANCE FACTOR (Ie) — 1.25
- Ss — 0.186
- S1 — 0.069
- SITE CLASS — D
- Sds — 0.198
- Sd1 — 0.110
- SEISMIC DESIGN CATEGORY — B
- SEISMIC FORCE RESISTING SYSTEM — OTHER STEEL SYSTEMS
- DESIGN BASE SHEAR (V) — 36 (Kips)
- SEISMIC RESPONSE COEFFICIENT (Cs) — 0.065
- RESPONSE MODIFICATION FACTOR (R) — 3
- ANALYSIS PROCEDURE: — EQUIVALENT LATERAL FORCE

SPECIAL LOADS:
- RETAINING WALLS: (1610.1) — 40 PCF
- INTERIOR PARTITIONS: (1607.13) — 5 PSF
- HANDRAILS: (1607.7) — 50 PLF

REINFORCED CONCRETE

1. MATERIALS:
   A. SPECIFICATIONS: IN GENERAL, COMPLY WITH ACI-301-99, "SPECIFICATIONS FOR STRUCTURAL CONCRETE FOR BUILDINGS".
   B. STRUCTURAL CONCRETE:

CLASS	LOCATION	f'c (psi)
I	FOOTINGS, PIERS, GRADE BEAMS, CAISSONS	3,000
II	INTERIOR SLABS ON GRADE, AND ALL INTERIOR CONCRETE NOT OTHERWISE IDENTIFIED	3,500
III	EXTERIOR SLABS ON GRADE, SITE CONCRETE, RETAINING WALLS, AND ALL EXTERIOR CONCRETE NOT OTHERWISE IDENTIFIED	4,000 (W/AIR)
IV	BACKFILL BELOW FOOTINGS	1,500

   C. ALL DEFORMED REINFORCING BARS: FY = 60,000 PSI.
2. FIELD MANUAL: PROVIDE AT LEAST ONE COPY OF THE ACI FIELD REFERENCE MANUAL, SP-15 IN THE FIELD OFFICE AT ALL TIMES.
3. CONTINGENCIES:
   A. PROVIDE LEAN CONCRETE (CLASS IV) UNDER FOUNDATIONS FOR ACCIDENTAL OVER EXCAVATION, SOFT SPOTS, AND TRENCHES.
4. FOOTINGS, PIERS, WALLS:
   A. DOWELS IN FOOTINGS TO MATCH VERTICAL PIER OR WALL REINFORCING.
   B. PROVIDE CORNER BARS AT WALL AND FOOTING CORNERS TO MATCH HORIZONTAL REINFORCING. MINIMUM LENGTH OF EACH LEG - 36 BAR DIAMETERS.
5. SPLICES:
   A. LAP SPLICE REINFORCING BARS AS SCHEDULED. MINIMUM LAP = 36 DIAMETERS.
6. CONSTRUCTION JOINTS:
   A. CONSTRUCTION JOINTS PERMITTED ONLY WHERE SHOWN OR AS APPROVED BY THE STRUCTURAL ENGINEER.
7. WEDGE ANCHORS AND CHEMICAL ANCHORS:
   A. MINIMUM EMBEDMENT FOR WEDGE ANCHORS SHALL BE 7 BOLT DIAMETERS, UNLESS DESIGNATED OTHERWISE.
   B. MINIMUM EMBEDMENT FOR EPOXY ANCHORS SHALL BE 9 BOLT DIAMETERS, UNLESS DESIGNATED OTHERWISE.

MASONRY

1. MATERIALS:
   A. CONCRETE BLOCK: ASTM C90 (HOLLOW AND SOLID), f'm = 1,500 PSI
   B. MORTAR: TYPE S, MINIMUM COMPRESSIVE STRENGTH = 1,800 PSI
   C. BOND BEAM AND CORE FILL: ASTM C476, COARSE TYPE
   D. JOINT REINFORCING: STANDARD LADDER TYPE, 9 GA., MILL GALVANIZED FINISH
2. MISCELLANEOUS:
   A. PROVIDE SOLID OR GROUT-FILLED CMU FOR ALL BELOW-GRADE FOUNDATION WALLS.
   B. FILL CORE SOLID AROUND CAST-IN ANCHOR BOLTS.
   C. PROVIDE SOLID CMU OR SOLIDLY FILLED HOLLOW CMU AT ALL EPOXY ANCHOR AND WEDGE ANCHOR LOCATIONS. EXTEND SOLID AREA AT LEAST 8" IN ALL DIRECTIONS FROM CENTER OF ANCHOR.
   D. HOLLOW MASONRY UNITS TO BE LAID WITH FULL MORTAR COVERAGE ON HORIZONTAL AND VERTICAL FACE SHELLS. WEBS SHALL ALSO BE BEDDED IN ALL COURSES OF PIERS, AND PILASTERS, AND IN THE STARTING COURSE ON FOOTINGS, AND WHEN ADJACENT TO CELLS OR CAVITIES TO BE REINFORCED OR FILLED WITH CONCRETE OR GROUT. SOLID UNITS TO BE LAID WITH FULL HEAD AND BED JOINTS.
   E. PROVIDE HORIZONTAL JOINT REINFORCING AT 8" O.C. BELOW GRADE, 16" O.C. ABOVE GRADE, UNLESS NOTED OTHERWISE.
   F. MINIMUM EMBEDMENT FOR WEDGE ANCHORS SHALL BE 7 BOLT DIAMETERS, UNLESS DESIGNATED OTHERWISE. MINIMUM EMBEDMENT FOR EPOXY ANCHORS SHALL BE 9 BOLT DIAMETERS, UNLESS DESIGNATED OTHERWISE.
   G. WHERE HOLLOW MASONRY UNITS ARE USED ABOVE HOLLOW MASONRY UNITS OF A DIFFERENT THICKNESS, PROVIDE A CONTINUOUS COURSE OF SOLID MASONRY AT LEAST 8" HIGH BELOW THE TRANSITION.
   H. LAP SPLICE REINFORCING BARS AS SCHEDULED. MINIMUM LAP = 48 BAR DIAMETERS.
   I. ALL GROUTING OF MASONRY WALLS SHALL BE BY THE LOW-LIFT GROUTING METHOD (MAXIMUM LIFT HEIGHT 5'-0"), UNLESS CLEAN-OUTS AND INSPECTIONS ARE PROVIDED.

STRUCTURAL STEEL

3. MATERIALS:
   A. STRUCTURAL STEEL WIDE FLANGE SHAPES: ASTM A992, Fy = 50 KSI
   B. STRUCTURAL STEEL CHANNELS, PLATES, ANGLES, ETC.: ASTM A36, Fy = 36 KSI
   C. HIGH STRENGTH BOLTS: ASTM A325 OR A490
   D. ANCHOR BOLTS: ASTM F1554, GRADE 36, UNLESS NOTED OTHERWISE
   E. ELECTRODES: SERIES E70
   F. STRUCTURAL TUBING: ASTM A500, GRADE B, Fy = 46 KSI
   G. STRUCTURAL PIPES: ASTM A53, TYPE E OR S, GRADE B, Fy = 35 KSI
   H. SHEAR STUDS: ASTM A108, Fy = 60 KSI
   I. DEFORMED BAR ANCHORS: ASTM A496, Fy = 70 KSI
4. SPECIFICATIONS: WELDING PERSONNEL AND PROCEDURES ARE TO BE QUALIFIED PER AWS D1.1. UNLESS SPECIFICALLY SHOWN OTHERWISE, DESIGN, FABRICATION AND ERECTION TO BE GOVERNED BY THE LATEST REVISIONS OF:
   A. AISC SPECIFICATION FOR THE DESIGN, FABRICATION AND ERECTION OF STRUCTURAL STEEL FOR BUILDINGS.
   B. AISC CODE OF STANDARD PRACTICE.
   C. STRUCTURAL WELDING CODE, AWS D1.1 OF THE AMERICAN WELDING SOCIETY.
   D. SPECIFICATIONS FOR STRUCTURAL JOINTS USING ASTM A325 OR A490 BOLTS.
5. CONNECTIONS:
   A. FIELD CONNECTIONS ARE TO BE BOLTED, EXCEPT AS INDICATED OTHERWISE. SHOP CONNECTIONS MAY BE WELDED OR BOLTED. CONNECTIONS ARE TO BE DESIGNED BY THE FABRICATOR TO DEVELOP EITHER THE FULL STRENGTH OF THE MEMBER OR THE FORCES SHOWN ON THE PLANS (WHICHEVER GOVERNS), WITH A MINIMUM REACTION OF 6 KIPS. FOLLOW INSTRUCTIONS ON DRAWINGS FOR GENERAL ARRANGEMENT OR PARTICULAR DETAILS.
6. COATINGS:
   A. DO NOT PAINT STEEL OR ANCHOR BOLTS WHICH WILL BE ENCASED IN CONCRETE OR MASONRY, OR ANY STEEL WHICH IS SCHEDULED TO RECEIVE SPRAY-APPLIED OR INTUMESCENT-MASTIC FIREPROOFING.
   B. ALL BELOW-GRADE STEEL (INCLUDING ANCHOR BOLTS, NUTS, WASHERS, BASE PLATES, AND THE BELOW-GRADE PORTION OF COLUMNS) WHICH IS NOT FULLY ENCASED IN CONCRETE SHALL RECEIVE A FIELD-APPLIED COAT OF ASPHALT-MASTIC PAINT.
7. MISCELLANEOUS:
   A. PROVIDE HOLES FOR OTHERS. IF OPENING IS NOT SHOWN ON THE STRUCTURAL DRAWINGS, OBTAIN PRIOR APPROVAL.
   B. STEEL SUPPORTING OR CONNECTING TO MECHANICAL AND OTHER EQUIPMENT AND ROOF OPENINGS AS SHOWN ON ARCHITECTURAL, MECHANICAL AND/OR ON STRUCTURAL DRAWINGS IS SHOWN FOR BIDDING PURPOSES ONLY. CONTRACTOR SHALL RECONCILE EXACT SIZE AND LOCATION WITH MECHANICAL AND OTHER REQUIREMENTS BEFORE PROCEEDING WITH HIS WORK.
   C. GROUT UNDER BEARING PLATES TO BE NON-SHRINKING TYPE. EXPOSED GROUT SHALL BE NON-METALLIC.
   D. STEEL BELOW GRADE TO BE PROTECTED BY A MINIMUM OF 3" OF CONCRETE, 4" OF SOLID MASONRY, OR A FIELD-APPLIED COAT OF ASPHALT-MASTIC PAINT.
   E. PROVIDE HEAVY WASHER AT ALL ANCHOR BOLTS.
   F. FINISH ENDS OF ALL COLUMNS, STIFFENERS AND ALL OTHER MEMBERS IN DIRECT BEARING.
   G. PROVIDE BOLT HOLES FOR WOOD NAILERS.
   H. STEEL IN CONTACT WITH PRESSURE-TREATED LUMBER SHALL BE PROTECTED FROM CORROSION FROM PRESERVATIVE CHEMICALS WITH A 20 MIL (MIN.) VAPOR BARRIER. BOLTS AND SCREWS THROUGH PRESSURE-TREATED LUMBER ARE TO BE HOT DIPPED GALVANIZED PER ASTM A153 WITH A MINIMUM G185 COATING OR SHALL BE STAINLESS STEEL WITH CHEMICAL COMPOSITION CONFORMING TO AISI 303/304 OR AISI 316.
   K. PROVIDE ADDITIONAL SUPPORT FOR ALL DECK OPENINGS THAT ARE EQUAL TO OR GREATER THAN 10" IN WIDTH OR DIAMETER. NOT ALL DECK OPENINGS ARE SHOWN ON THE STRUCTURAL DRAWINGS. COORDINATE SIZE AND LOCATION WITH ARCHITECTURAL, MECHANICAL, PLUMBING AND OTHER TRADES.

METAL DECK

1. MATERIALS:
   A. SHEET STEEL: ASTM A653
   B. ROOF DECK: 3" DEEP x 20 GA., WIDE RIB, GALVANIZED.
   C. COMPOSITE FLOOR DECK: 2" DEEP x 18 GA., GALVANIZED.
2. SPECIFICATIONS: WELDING PERSONNEL AND PROCEDURES ARE TO BE QUALIFIED PER AWS. DESIGN, FABRICATION, AND ERECTION TO BE GOVERNED BY THE LATEST REVISIONS OF:
   A. AISI "SPECIFICATION OF THE DESIGN OF COLD-FORMED STEEL STRUCTURAL MEMBERS."
   B. STRUCTURAL WELDING CODE, AWS D1.3 OF THE AMERICAN WELDING SOCIETY.
   C. SDI "DESIGN MANUAL FOR FLOOR DECK AND ROOF DECKS".
3. CONNECTIONS:
   A. ROOF DECK: 5/8" DIAMETER PUDDLE WELDS. RESIST A GROSS UPLIFT OF 30 PSF.
   B. COMPOSITE FLOOR DECK: 5/8" DIAMETER FUSION WELDS.
   C. SIDE LAP FASTENING: #10 SCREWS
4. FINISH:
   A. GALVANIZED: CONFORM TO ASTM A653, G60.
5. MISCELLANEOUS:
   A. UNITS ARE TO BE CONTINUOUS OVER AT LEAST THREE SPANS. WHERE FEWER THAN THREE SPANS ARE NEEDED, GAGE SHALL BE INCREASED AS REQUIRED TO OBTAIN THE SAME DESIGN STRENGTH AND THE THREE-SPAN CONDITION. END LAPS SHALL ONLY BE LOCATED OVER SUPPORTS.
   B. FIELD CUTTING TO BE PERFORMED WITH A SAW.
   C. METAL DECK SHOULD BE PROTECTED FROM CORROSION FROM PRESERVATIVE CHEMICALS IN PRESSURE-TREATED LUMBER WITH A MINIMUM 20 MIL VAPOR BARRIER. ALL FASTENERS AND CONNECTORS IN CONTACT WITH PRESSURE-TREATED LUMBER ARE TO BE HOT DIPPED GALVANIZED PER ASTM A153 AND ASTM A123 WITH A MINIMUM G185 COATING.
   D. PROVIDE ADDITIONAL SUPPORT FOR ALL DECK OPENINGS THAT ARE EQUAL TO OR GREATER THAN 10" IN WIDTH OR DIAMETER. NOT ALL DECK OPENINGS ARE SHOWN ON THE STRUCTURAL DRAWINGS. COORDINATE SIZE AND LOCATION WITH ARCHITECTURAL, MECHANICAL, PLUMBING AND OTHER TRADES.

COLD FORMED METAL FRAMING

1. MATERIALS:
   A. COLD-FORMED METAL STUDS AND JOISTS SHOWN ON THE CONTRACT DOCUMENTS ARE DESIGNATED BY "DEPTH", "SHAPE", "WIDTH", AND "THICKNESS" AS FOLLOWS:
      1) DEPTH: 362 = 3-5/8"; 600 = 6"; 800 = 8"; ETC.
      2) SHAPE: S = C-SHAPE; T = TRACK; U = CHANNEL
      3) WIDTH: 125 = 1-1/4"; 162 = 1-5/8"; 200 = 2"; ETC.
      4) THICKNESS: -18 (25 GA.); -33 (20 GA.); -43 (18 GA.); -54 (16 GA.); -68 (14 GA.)
      EXAMPLE: 600 S 162 -54 = 6" C-SHAPE, 1 5/8" FLANGE, 16 GA.
   B. ALL 18 GA AND LIGHTER STUDS TO BE 33 KSI MATERIAL; ALL 16 GA AND HEAVIER STUDS TO BE 50 KSI MATERIAL.
   C. ALL TRACKS AND ACCESSORIES: FY = 33 KSI MINIMUM.
2. SPECIFICATIONS: WELDING PERSONNEL AND PROCEDURES ARE TO BE QUALIFIED PER AWS. DESIGN, FABRICATION, AND ERECTION TO BE GOVERNED BY LATEST REVISIONS OF:
   A. AISI "SPECIFICATION OF THE DESIGN OF COLD-FORMED STEEL STRUCTURAL MEMBERS."
   B. STRUCTURAL WELDING CODE, AWS D1.3 OF THE AMERICAN WELDING SOCIETY.
3. CONNECTIONS:
   A. FIELD CONNECTIONS MAY BE EITHER WELDED OR SCREWED, EXCEPT AS SPECIFICALLY DETAILED OTHERWISE.
   B. WELD SIZE TO BE 1/8" WITH AWS TYPE 6013 OR 7014 ROD.
   C. EXCEPT AS NOTED OTHERWISE, MECHANICAL FASTENERS TO BE SELF TAPPING #10-16 SCREWS.
4. FINISH:
   A. ALL MATERIAL TO BE GALVANIZED COATED IN ACCORDANCE WITH ASTM A525 G-60.
   B. TOUCH-UP FIELD WELDS WITH ZINC RICH PAINT.
5. MISCELLANEOUS:
   A. ALL FIELD CUTTING TO BE PERFORMED WITH A SAW.
   B. TRACKS TO BE SECURELY ANCHORED TO SUPPORTING STRUCTURE WITH WELD OR SCREW AT EACH SIDE OF TRACKS.
   C. PROVIDE HORIZONTAL BRIDGING AT 48" O.C. MAX. FOR ALL STUD WALLS, UNLESS NOTED OTHERWISE.
   D. EACH MEMBER OF MULTIPLE MEMBER COLUMNS SHALL BE SCREWED TOGETHER USING FULL-HEIGHT TRACKS AND #10 SCREWS AT 12" O.C. ALTERNATELY, MULTIPLE MEMBER COLUMNS MAY BE WELDED TOGETHER WITH A 1" WELD AT 18" ON CENTER, EACH SIDE, EACH PIECE, FOR THE FULL LENGTH OF THE COLUMN.

STATEMENT OF SPECIAL INSPECTION REQUIREMENTS

PROJECT NAME: DAYTON VA - OPEN MRI ADDITION
PROJECT NUMBER: 11267

ITEM / FREQUENCY	SCOPE	NAME OF TESTING/INSPECTION AGENCY (TO BE COMPLETED BY OWNER OR CONSTRUCTION MANAGER)

SOILS AND FOUNDATIONS
(COORDINATE WITH SPEC. SECTION 31 00 00)

SHALLOW FOUNDATIONS ______
PERIODIC — INSPECT SOILS BELOW FOOTINGS FOR ADEQUATE BEARING CAPACITY AND CONSISTENCY WITH GEOTECHNICAL REPORT. INSPECT REMOVAL OF UNSUITABLE MATERIAL AND PREPARATION OF SUBGRADE PRIOR TO PLACEMENT OF CONTROLLED FILL.

CONTROLLED STRUCTURAL FILL ______
CONTINUOUS — PERFORM SIEVE TESTS AND MODIFIED PROCTOR TEST OF EACH SOURCE OF FILL MATERIAL. INSPECT PLACEMENT, LIFT THICKNESS, AND COMPACTION OF CONTROLLED FILL. TEST DENSITY OF EACH LIFT OF FILL BY NUCLEAR METHODS. VERIFY EXTENT AND SLOPE OF FILL PLACEMENT. THIS REQUIREMENT MAY BE WAIVED FOR FILL PLACEMENTS LESS THAN 12" DEEP.

DEEP FOUNDATIONS ______
CONTINUOUS — MONITOR INSTALLATION OF DRILLED PIER FOUNDATIONS. VERIFY PIER DIAMETER, LENGTHS, EMBEDMENT INTO BEDROCK, AND SUITABILITY OF END BEARING STRATA.

CAST-IN-PLACE CONCRETE
(COORDINATE WITH SPEC. SECTION 03 30 00)

MIX DESIGN ______
PERIODIC — REVIEW CONCRETE BATCH TICKETS AND VERIFY COMPLIANCE WITH APPROVED MIX DESIGN. VERIFY THAT WATER ADDED AT THE SITE DOES NOT EXCEED THAT ALLOWED BY THE MIX DESIGN.

MATERIAL CERTIFICATION ______
PERIODIC — VERIFY THAT MATERIALS COMPLY WITH THOSE SPECIFIED.

REINFORCEMENT INSTALLATION ______
PERIODIC — INSPECT SIZE, SPACING, COVER, POSITIONING, AND GRADE OF REINFORCING STEEL. VERIFY THAT REINFORCING BARS ARE FREE OF FORM OIL OR OTHER DELETERIOUS MATERIALS. INSPECT BAR LAPS AND MECHANICAL SPLICES. VERIFY THAT BARS ARE ADEQUATELY TIED AND SUPPORTED ON CHAIRS OR BOLSTERS.

ANCHORS AND EMBEDS ______
PERIODIC — INSPECT SIZE, POSITIONING, AND EMBEDMENT OF ANCHOR RODS, WELD PLATES, AND ALL OTHER CAST-IN EMBEDDED ITEMS. INSPECT CONCRETE PLACEMENT AND CONSOLIDATION AROUND ANCHORS.

CONCRETE PLACEMENT ______
PERIODIC — INSPECT PLACEMENT OF CONCRETE. VERIFY THAT CONCRETE CONVEYANCE AND DEPOSITING AVOIDS SEGREGATION OR CONTAMINATION. VERIFY THAT CONCRETE IS PROPERLY CONSOLIDATED.

CONCRETE SAMPLING AND TESTING ______
CONTINUOUS — TEST CONCRETE COMPRESSIVE STRENGTH, SLUMP, AIR CONTENT, AND TEMPERATURE.

CURING AND PROTECTION ______
PERIODIC — INSPECT CURING, COLD-WEATHER PROTECTION, AND HOT-WEATHER PROTECTION PROCEDURES.

MASONRY
(COORDINATE WITH SPEC. SECTION 04 00 00)

MIXING OF MORTAR AND GROUT ______
PERIODIC — INSPECT PROPORTIONING, MIXING, AND RETEMPERING OF MORTAR AND GROUT.

INSTALLATION OF MASONRY ______
PERIODIC — INSPECT SIZE, LAYOUT, BONDING, AND PLACEMENT OF MASONRY UNITS.

MORTAR JOINTS ______
PERIODIC — INSPECT CONSTRUCTION OF MORTAR JOINTS INCLUDING TOOLING AND FILLING OF HEAD JOINTS.

REINFORCEMENT INSTALLATION ______
PERIODIC — INSPECT PLACEMENT, POSITIONING, AND LAPPING OF REINFORCING STEEL.

GROUTING OPERATIONS ______
CONTINUOUS — INSPECT PLACEMENT AND CONSOLIDATION OF GROUT. INSPECT MASONRY CLEAN-OUTS FOR HIGH-LIFT GROUTING.

WEATHER PROTECTION ______
PERIODIC — INSPECT COLD-WEATHER PROTECTION AND HOT-WEATHER PROTECTION PROCEDURES. VERIFY THAT WALL CAVITIES ARE PROTECTED AGAINST PRECIPITATION.

ANCHORS AND TIES ______
PERIODIC — INSPECT SIZE, LOCATION, SPACING, AND EMBEDMENT OF DOWELS, ANCHORS, AND TIES.

STRUCTURAL STEEL
(COORDINATE WITH SPEC. SECTION 05 12 00)

FABRICATION FACILITY IS TO BE A MEMBER OF THE AMERICAN INSTITUTE OF STEEL CONSTRUCTION (AISC).

BEARING-TYPE BOLTING ______
INSPECT INSTALLATION AND TIGHTENING OF BEARING-TYPE HIGH-STRENGTH BOLTS.

SLIP-CRITICAL BOLTING ______
CONTINUOUS — VERIFY PROPER TIGHTENING SEQUENCE FOR SLIP-CRITICAL BOLTED CONNECTIONS. VERIFY THAT SPLINES HAVE SEPARATED FROM TENSION CONTROL BOLTS.

MINOR WELDING ______
PERIODIC — VERIFY SIZE AND LENGTH, AND VISUALLY INSPECT ALL SINGLE-PASS FILLET WELDS NOT EXCEEDING 5/16 INCH IN SIZE.

MAJOR WELDING ______
CONTINUOUS — VERIFY SIZE AND LENGTH, INSPECT PRE-HEAT, POST-HEAT, AND SURFACE PREPARATION BETWEEN PASSES, AND ULTRASONICALLY TEST ALL FILLET WELDS EXCEEDING 5/16 INCH IN SIZE, ALL MULTI-PASS FILLET WELDS, AND ALL PARTIAL AND COMPLETE PENETRATION GROOVE WELDS.

SHEAR CONNECTORS ______
CONTINUOUS — INSPECT SIZE, NUMBER, POSITIONING, AND WELDING OF SHEAR CONNECTORS. INSPECT STUDS FOR FULL 360 DEGREE FLASH. RING-TEST ALL SHEAR CONNECTORS WITH A 3 LB HAMMER. BEND TEST ALL QUESTIONABLE STUDS TO 15 DEGREES.

STRUCTURAL DETAILS ______
PERIODIC — INSPECT STEEL FRAME FOR COMPLIANCE WITH STRUCTURAL DRAWINGS, INCLUDING BRACING, MEMBER CONFIGURATION, AND CONNECTION DETAILS.

METAL DECK
(COORDINATE WITH SPEC. SECTION 05 31 00)

FABRICATION FACILITY IS TO BE A MEMBER OF THE STEEL DECK INSTITUTE (SDI).

MEMBER PROPERTIES ______
PERIODIC — VERIFY DECK TYPE, GAGE, AND FINISH.

ERECTED MEMBERS ______
PERIODIC — INSPECT WELDING AND SIDE-LAP FASTENING OF METAL ROOF AND FLOOR DECK.

COLD-FORMED STEEL FRAMING
(COORDINATE WITH SPEC. SECTION 05 40 00)

MEMBER SIZES ______
PERIODIC — VERIFY SIZE, GAGE, AND TYPE OF STUDS AND JOISTS.

FRAMING DETAILS ______
PERIODIC — VERIFY ALIGNMENT, SPACING, AND GENERAL ARRANGEMENT OF COLD-FORMED METAL FRAMING. VERIFY THE PROPER USE OF SLIDE CLIPS AND DEFLECTION TRACKS.

ABBREVIATIONS

AB	ANCHOR BOLT
ALUM	ALUMINUM
ARCH	ARCHITECTURAL
BFB	BOTTOM FLANGE BRACE
BLDG	BUILDING
BM	BEAM
CFMF	COLD-FORMED METAL FRAMING
CJ	CONTROL OR CONSTRUCTION JOINT
CLR	CLEAR
CM	CONSTRUCTION MANAGER
CMU	CONCRETE MASONRY UNIT
COL	COLUMN
CONC	CONCRETE
CONT	CONTINUOUS
COORD	COORDINATE
CY	CUBIC YARD
DBL	DOUBLE
DEMO	DEMOLISH OR DEMOLITION
DET	DETAIL
DIA	DIAMETER
DIAG	DIAGONAL
DIM	DIMENSION
DWG	DRAWING
EA	EACH
EJ	EXPANSION JOINT
EW	EACH WAY
EXP	EXPANSION
FDN	FOUNDATION
FIN	FINISH OR FINISHED
FLR	FLOOR
FTG	FOOTING
FRTW	FIRE-RETARDANT TREATED WOOD
FV	FIELD VERIFY
GA	GAGE
GALV	GALVANIZE
GC	GENERAL CONTRACTOR
HC	HOLLOW CORE
HORIZ	HORIZONTAL
ID	INSIDE DIAMETER
IF	INSIDE FACE
INT	INTERIOR
JST	JOIST
JT	JOINT
L	ANGLE
LLH	LONG LEG HORIZONTAL
LLV	LONG LEG VERTICAL
MAS	MASONRY
MAX	MAXIMUM
MIN	MINIMUM
MTL	METAL
N	NORTH
NA	NOT APPLICABLE
NIC	NOT IN CONTRACT
NOM	NOMINAL
NTS	NOT TO SCALE
OC	ON CENTER
OD	OUTSIDE DIAMETER
OH	OVERHEAD
OPP	OPPOSITE
OPNG	OPENING
OSB	ORIENTED STRAND BOARD
PC	PRECAST
PEMB	PRE-ENGINEERED METAL BUILDING
PERP	PERPENDICULAR
PSI	POUNDS PER SQUARE INCH
PSF	POUNDS PER SQUARE FOOT
REINF	REINFORCING OR REINFORCED
SCH	SCHEDULE
SECT	SECTION
SF	SQUARE FOOT
SL	SLOPED
SPEC	SPECIFICATIONS
SQ	SQUARE
SS	STAINLESS STEEL
STD	STANDARD
SY	SQUARE YARD
SYM	SYMMETRICAL
T/	TOP OF
T&B	TOP AND BOTTOM
TEMP	TEMPORARY
T&G	TONGUE AND GROOVE
T&S	TEMPERATURE AND SHRINKAGE
TYP	TYPICAL
UN	UNLESS NOTED
UNO	UNLESS NOTED OTHERWISE
VB	VAPOR BARRIER
VERT	VERTICAL
W	WIDE FLANGE
W/O	WITHOUT
WT	WEIGHT
WWF	WELDED WIRE FABRIC
YD	YARD

REINFORCING CLEARANCES/COVER
(#3 - #11 BARS)

EXPOSURE CONDITION	MIN. COVER U.N.O.	TOLERANCE
CAST AGAINST AND PERMANENTLY EXPOSED TO EARTH	3"	-3/8", + 1"
EXPOSED TO EARTH OR WEATHER: #5 AND SMALLER BARS #6 AND LARGER BARS	 1 1/2" 2"	 -1/4", +1/2" -1/4", +1/2"
NOT EXPOSED TO WEATHER OR IN CONTACT WITH GROUND: SLABS, WALLS, BEAMS, COLUMNS, PIERS - TO TIES & STIRRUPS	 3/4" 1 1/2"	 -1/4", +3/8" -1/4", +1/2"

"-" INDICATES TOLERANCE DECREASE TOWARDS MEMBER FACE.
"+" INDICATES AWAY FROM MEMBER FACE

LAP SPLICE SCHEDULE FOR MASONRY REINFORCING

MARK	6" CMU	8" CMU	10" CMU	12" CMU
#4	24"	24"	24"	24"
#5	31"	30"	30"	30"
#6	60"	43"	39"	39"
#7	-	59"	46"	46"
#8	-	*91"	*70"	60"
#9	-	-	*90"	*73"

1. * INDICATES LAP LENGTH GREATER THAN MAXIMUM ALLOWABLE HEIGHT OF 5'-0" FOR LOW-LIFT GROUTING.
2. APPLICABLE ONLY TO BARS CENTERED IN GROUT CORE.
3. APPLICABLE ONLY FOR 60 KSI STEEL AND ASTM C90 BLOCK.

LAP SPLICE SCHEDULE FOR CONCRETE REINFORCING
3,000 psi CONCRETE
UNCOATED REINFORCING BARS

BAR SIZE	3/4" CLR. (TOP BARS / OTHER BARS)	1 1/2" CLR. AND GREATER (TOP BARS / OTHER BARS)
#4	37" / 28"	37" / 28"
#5	46" / 36"	46" / 36"
#6	56" / 43"	56" / 43"
#7	90" / 69"	81" / 62"
#8	111" / 85"	93" / 71"
#9	134" / 103"	104" / 80"
#10	162" / 124"	118" / 90"
#11	190" / 146"	131" / 100"

LAP SPLICE SCHEDULE FOR CONCRETE REINFORCING
4,000 psi CONCRETE
UNCOATED REINFORCING BARS

BAR SIZE	3/4" CLR. (TOP BARS / OTHER BARS)	1 1/2" CLR. AND GREATER (TOP BARS / OTHER BARS)
#4	32" / 25"	32" / 25"
#5	40" / 31"	40" / 31"
#6	48" / 37"	48" / 37"
#7	78" / 60"	70" / 54"
#8	96" / 74"	80" / 62"
#9	116" / 90"	90" / 70"
#10	140" / 108"	102" / 78"
#11	164" / 126"	113" / 87"

1. TOP BARS / OTHER BARS — TOP BARS DEFINED AS HORIZONTAL WITH MORE THAN 12" OF CONCRETE CAST BELOW THE BAR.
2. BAR SPACING TO BE A MINIMUM OF THREE DIAMETERS UNLESS NOTED OR SCHEDULED OTHERWISE.
3. APPLICABLE ONLY FOR 60ksi STEEL AND NORMAL WEIGHT CONCRETE.
4. IN LIEU OF LAP SPLICING, BARS MAY BE SPLICED BY MECHANICAL MEANS WHICH DEVELOP 125% OF THE BAR'S SPECIFIED YIELD STRENGTH.

PROJECT # 11267
DESIGNED BY SNF
DRAWN BY CAD
CHECKED BY SRM

DOCUMENT STATUS
- [ ] CD REVIEW
- [x] BIDDING
- [ ] PERMIT
- [ ] CONSTRUCTION

DESIGNER/ENGINEER ______
CAD OPERATOR ______
QA/QC CHECKER ______

Revisions	Date
ISSUED FOR BID	02/28/2012
PRE-BID AMENDMENT	05/10/2012

JEZERINAC GEERS & Associates, Inc.
CONSULTING STRUCTURAL ENGINEERS
5640 Frantz Road • Dublin, Ohio 43017
614-766-0066 • Fax 614-766-1223

STATE OF OHIO — STANLEY N. FULLER — E-67148 — REGISTERED PROFESSIONAL ENGINEER
Professional Seal

Revised By:

Drawing Title: GENERAL STRUCTURAL NOTES
SCALE: 3/4"=1'-0"

Project Title: OPEN MRI SITE PREP

Date: 02/28/2012
Project No. 552-CSI-101

Approved: Project Manager — RANDI FIORINA
Building Number: 335
Checked: JGA
Drawn: CAD
Drawing No. S1-01

Approved: Service Chief — GARY ABREU
Location: 4100 WEST THIRD STREET DAYTON, OH 45428

VAMC, DAYTON
VA Department of Veterans Affairs

VA FORM 08-6231, OCT 1978

\\SERVER\Project Files\2011\11267 - VA Dayton Addition\S1-01.dwg, 5/7/2012 11:51:07 AM

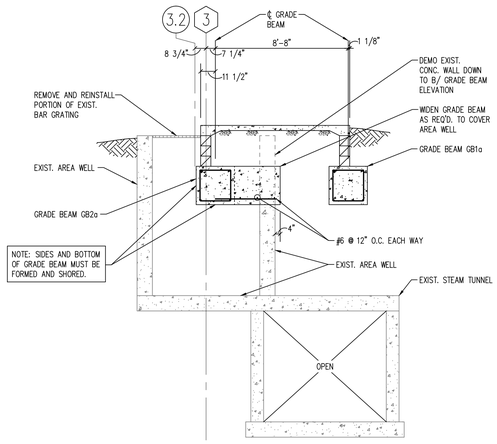

SECTION 1
1/4" = 1'-0"

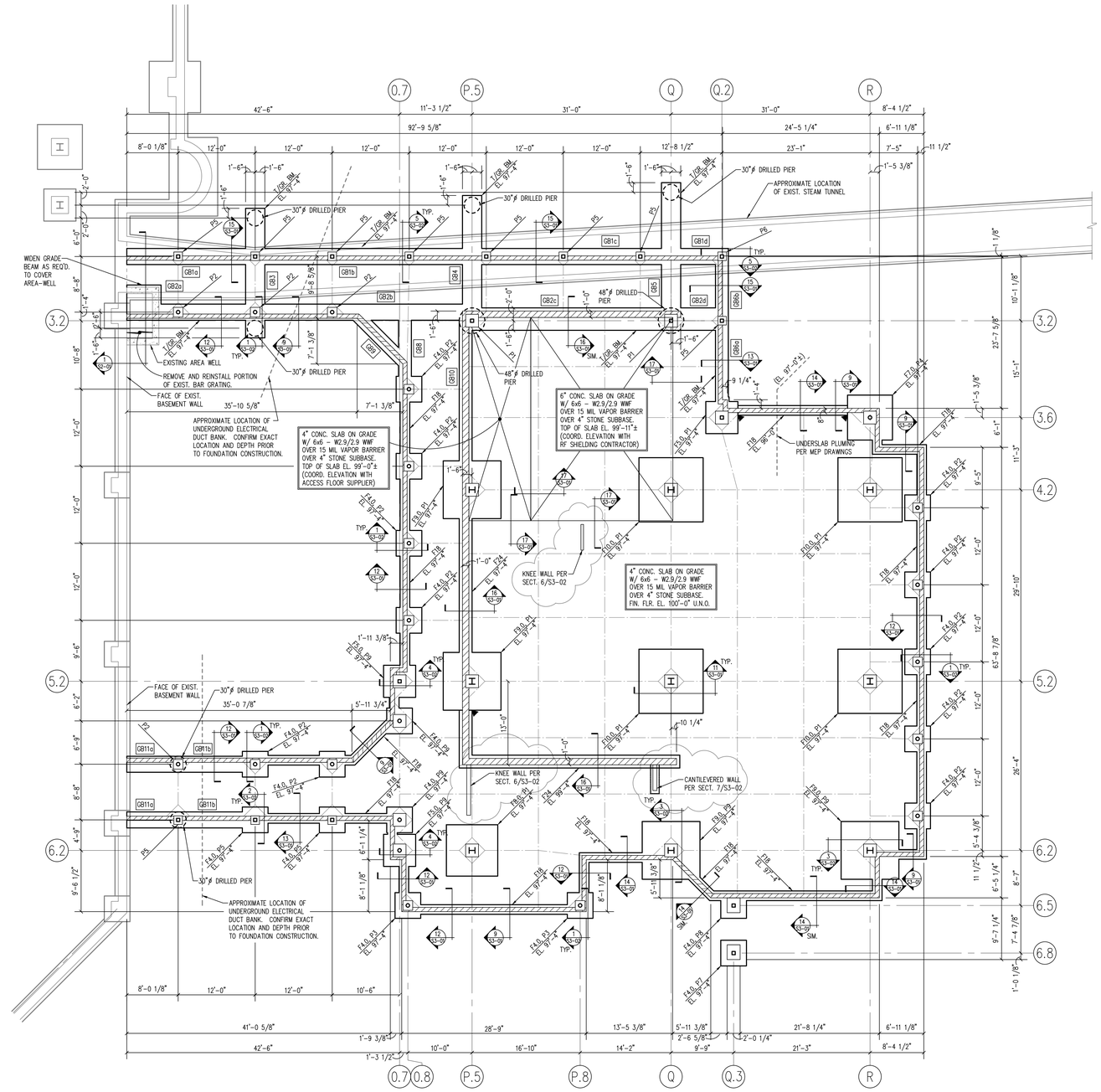

FOUNDATION PLAN

1/8" = 1'-0"

NORTH

FOOTING SCHEDULE		
MARK	SIZE	REINFORCING
F18	1'-6" WD. x 12" DP.	(2) #5 CONT.
F24	2'-0" WD. x 12" DP.	(3) #5 CONT.
F4.0	4'-0" SQ. x 12" DP.	(4) #5 E.W.
F5.0	5'-0" SQ. x 12" DP.	(5) #5 E.W.
F6.0	6'-0" SQ. x 16" DP.	(6) #6 E.W.
F7.0	7'-0" SQ. x 16" DP.	(7) #6 E.W.
F8.0	8'-0" SQ. x 20" DP.	(8) #6 E.W.
F9.0	9'-0" SQ. x 20" DP.	(9) #6 E.W.
F10.0	10'-0" SQ. x 20" DP.	(10) #6 E.W.

FOUNDATION NOTES

1. ▼ INDICATES FOOTING STEP PER SECTION 1/S3-01. STEP AT A RATIO NOT TO EXCEED ONE VERTICAL TO TWO HORIZONTAL.
2. ( ) INDICATES APPROXIMATE INVERT DEPTH OF UNDERGROUND UTILITIES. COORDINATE THE LOCATION AND DEPTH OF ALL UNDERGROUND MECHANICAL, ELECTRICAL, PLUMBING, AND/OR CIVIL WORK PRIOR TO CONSTRUCTION. NOT ALL UNDERGROUND UTILITIES ARE SHOWN ON THE STRUCTURAL DRAWINGS. FOUNDATIONS BUILT PRIOR TO THE INSTALLATION OF UNDERGROUND UTILITIES SHALL BE STEPPED OR DROPPED COMPLETELY BELOW THE UTILITY DEPTH PER SECTION 2/S3-01. WHERE UNDERGROUND UTILITIES ARE IN PLACE PRIOR TO FOUNDATION CONSTRUCTION, THEY SHALL BE ENCASED PER SECTION 3/S3-01. SEE SECTION 4/S3-01 FOR TRENCH EXCAVATION AND UTILITY PLACEMENT REQUIREMENTS FOR WORK THAT IS LAID ADJACENT TO FOOTINGS.
3. INDICATES EXISTING BUILDING CONSTRUCTION BASED ON ORIGINAL BUILDING PLANS. THE ACTUAL EXISTING BUILDING CONDITIONS, INCLUDING DIMENSIONS, ELEVATIONS, ETC., SHALL BE VERIFIED PRIOR TO CONSTRUCTION OR FABRICATION OF ANY MATERIAL BY CONTRACTOR PERFORMING WORK IN EXISTING AREAS. REPORT ANY DISCREPANCIES TO ARCHITECT IMMEDIATELY. DO NOT REMOVE EXISTING LOAD-BEARING WALLS, COLUMNS, OR ANY SUCH STRUCTURE WITHOUT THE PRIOR APPROVAL OF THE ARCHITECT. WHERE NEW STRUCTURE IS TO BE INSTALLED, PROVIDE SHORING AND BRACING AS REQUIRED TO PROPERLY SUPPORT THE REMAINING STRUCTURE UNTIL THE NEW STRUCTURE IS IN PLACE AND PROPERLY BRACED.
4. INDICATES SLAB CONTROL/CONSTRUCTION JOINT PER SECTION 7/S3-01. CONTROL JOINTS ARE TO BE LOCATED IN AREAS SHOWN AT A SPACING NOT TO EXCEED 12'-0" O.C. UNLESS DIMENSIONED OTHERWISE. DISTANCE BETWEEN SLAB CONSTRUCTION JOINTS SHALL NOT EXCEED 100 FEET IN ANY DIRECTION. COORDINATE CONTROL JOINT LAYOUT WITH ARCHITECTURAL FLOOR FINISH REQUIREMENTS.
5. DESIGN SOIL BEARING PRESSURE FOR SPREAD FOOTINGS = 2500 PSF. DESIGN ROCK BEARING PRESSURE FOR DRILLED PIERS = 30,000 PSF. ASSUME ALL DRILLED PIERS BEAR ON SOUND BEDROCK AT ELEVATION EL. 75'-0" FOR BIDDING PURPOSES ONLY. INFORMATION IS BASED ON GEOTECHNICAL EXPLORATION REPORT BY CTL ENGINEERING, INC. DATED FEBRUARY 9, 2012. REFERENCE THIS REPORT FOR ANY ADDITIONAL REQUIRED SOIL REMEDIATION PRIOR TO FOUNDATION AND/OR SLAB-ON-GRADE CONSTRUCTION. PLACE NO CONCRETE PRIOR TO INSPECTION AND APPROVAL OF BEARING SURFACES BY SOILS ENGINEER.
6. KEEP FOUNDATIONS FREE OF WATER AT ALL TIMES. REPLACE WEAKENED SOIL WITH LEAN CONCRETE OR FLOWABLE FILL.
7. ELEVATIONS SHOWN ON FOOTINGS INDICATE ELEVATION AT TOP OF FOOTING. REFERENCE ELEVATION/TOP OF CONCRETE SLAB ELEVATION AS NOTED ON PLANS. COORDINATE ABSOLUTE ELEVATION OF TOP OF SLAB WITH SITE DRAWINGS.
8. PROVIDE CORNER BARS AT ALL FOOTING AND CONCRETE WALL INTERSECTIONS PER SECTION 5/S3-01. PROVIDE CONTROL AND CONSTRUCTION JOINTS IN CAST-IN-PLACE CONCRETE WALLS PER SECTION 6/S3-01.
9. SEE SECTION 8/S3-01 FOR TYPICAL NEW-TO-EXISTING SLAB TRANSITION.
10. SEE SECTION 9/S3-01 FOR TYPICAL INTERIOR TO EXTERIOR SLAB ON GRADE CONSTRUCTION AT DOOR OPENINGS.
11. SEE SHEET S3-03 FOR GRADE BEAM SCHEDULE AND DRILLED CAISSON REINFORCING DETAILS.
12. SEE SHEET S5-01 FOR COLUMN SCHEDULE.
13. SEE SHEET S1-01 FOR GENERAL STRUCTURAL INFORMATION.

DESIGNER/ENGINEER ____
CAD OPERATOR ____
QAQC/CHECKER ____

Revisions	Date
ISSUED FOR BID	02/28/2012
PRE-BID AMENDMENT	05/10/2012

JEZERINAC GEERS & Associates, Inc.
CONSULTING STRUCTURAL ENGINEERS
5640 Frantz Road • Dublin, Ohio 43017
614-766-0066 • Fax 614-766-1223

STATE OF OHIO — STANLEY N. FULLER #E-67148 — REGISTERED PROFESSIONAL ENGINEER
Professional Seal

Revised By: ___

Drawing Title	Project Title	Date
FOUNDATION PLAN SCALE: 1/8"=1'-0"	OPEN MRI SITE PREP	02/28/2012
Approved: Project Manager RANDI FIORINA	Building Number 335 / Checked JGA / Drawn CAD	Project No. 552-CSI-101
Approved: Service Chief GARY ABREU	Location 4100 WEST THIRD STREET DAYTON, OH 45428	Drawing No. S2-01

VAMC, DAYTON — Department of Veterans Affairs

VA FORM 08-6231, OCT 1978

\\SERVER\Project Files\2011\11267 - VA Dayton Addition\S2-01.dwg, 5/7/2012 11:36:55 AM

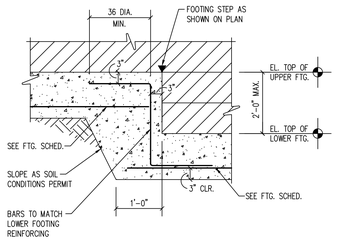

TYPICAL FOOTING STEP

SECTION 3/4" = 1'-0" (1)

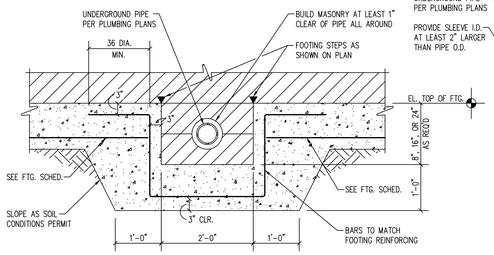

TYPICAL FOOTING TRENCH FOR UNDERGROUND PLUMBING

SECTION 3/4" = 1'-0" (2)

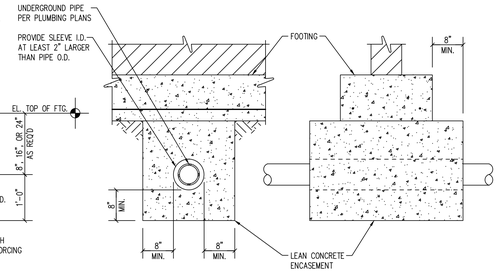

TYPICAL PLUMBING UNDER FOOTING

SECTION 3/4" = 1'-0" (3)

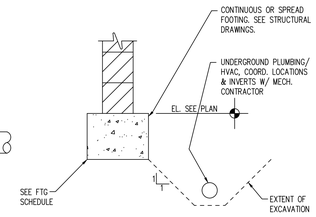

TYPICAL EXCAVATION CLEARANCE REQUIREMENTS

SECTION 3/4" = 1'-0" (4)

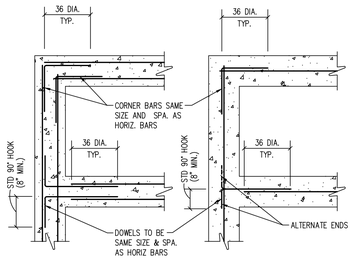

TYP. CORNER BARS FOR CONCRETE WALL AND FOOTING CONSTRUCTION

SECTION 3/4" = 1'-0" (5)

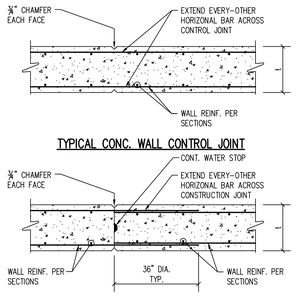

TYPICAL CONC. WALL CONTROL JOINT

TYPICAL CONC. WALL CONSTRUCTION JOINT

NOTE:
CONTROL/CONSTRUCTION JOINTS ARE TO BE LOCATED AT A TYPICAL SPACING OF 30 TIMES THE WALL THICKNESS (t) AND 15 TIMES THE WALL THICKNESS FROM ALL CORNERS.

SECTION 3/4" = 1'-0" (6)

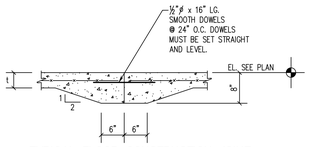

TYPICAL FLOOR CONSTRUCTION JOINT

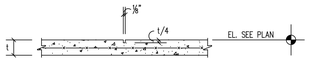

TYPICAL FLOOR CONTROL JOINT

SECTION 3/4" = 1'-0" (7)

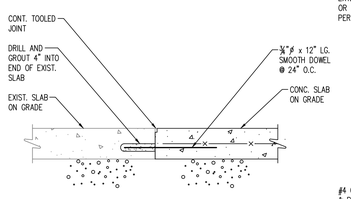

TYPICAL NEW-TO-EXISTING SLAB TRANSITION

SECTION 1 1/2" = 1'-0" (8)

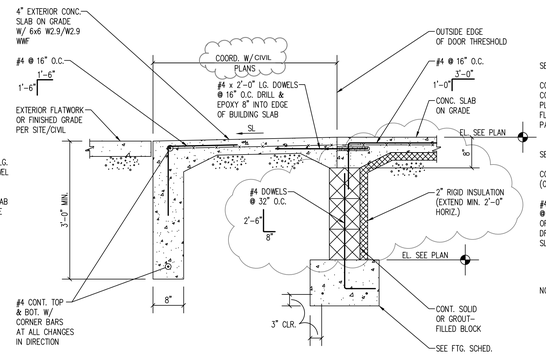

TYPICAL INTERIOR-TO-EXTERIOR SLAB TRANSITION

SECTION 3/4" = 1'-0" (9)

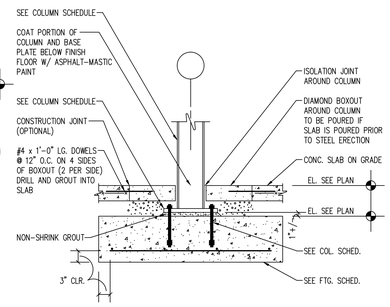

SECTION 3/4" = 1'-0" (10)

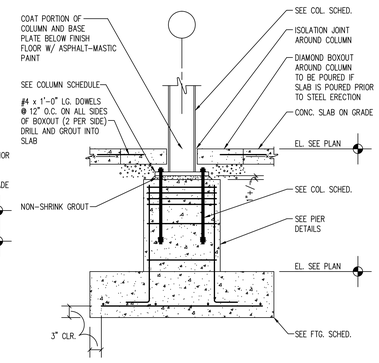

SECTION 3/4" = 1'-0" (11)

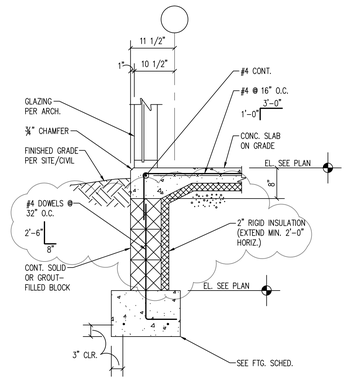

SECTION 3/4" = 1'-0" (12)

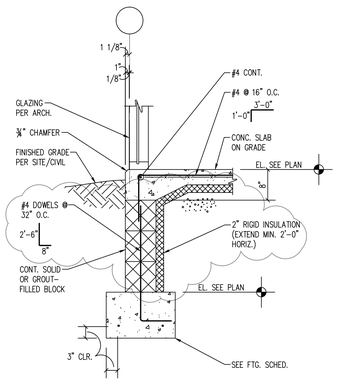

SECTION 3/4" = 1'-0" (13)

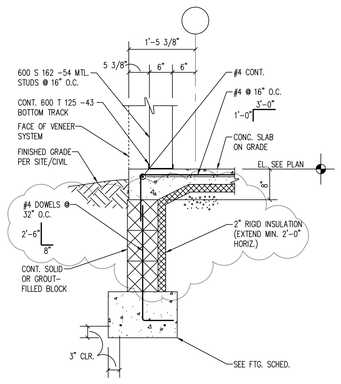

SECTION 3/4" = 1'-0" (14)

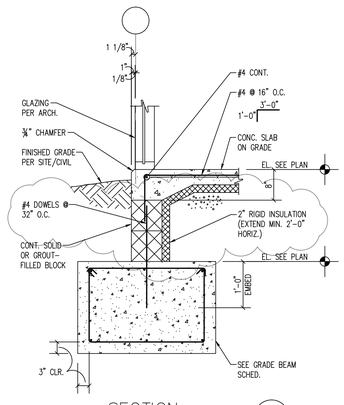

SECTION 3/4" = 1'-0" (15)

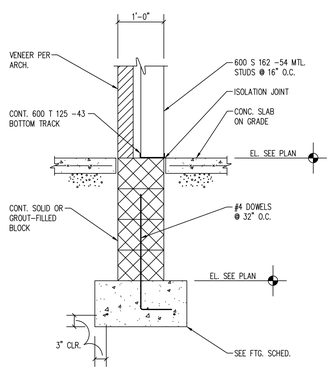

SECTION 3/4" = 1'-0" (16)

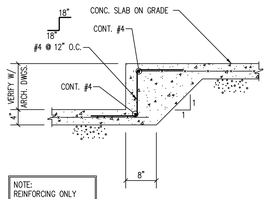

NOTE:
REINFORCING ONLY REQUIRED IF SLAB DEPRESSION IS GREATER THAN 2".

SECTION 3/4" = 1'-0" (17)

DESIGNER/ENGINEER
CAD OPERATOR
QAQC/CHECKER

Revisions	Date
ISSUED FOR BID	02/28/2012
PRE-BID AMENDMENT	05/10/2012

JEZERINAC GEERS & Associates, Inc.
CONSULTING STRUCTURAL ENGINEERS
5640 Frantz Road • Dublin, Ohio 43017
614-766-0066 • Fax 614-766-1223

STATE OF OHIO — STANLEY N. FULLER #E-67148 — REGISTERED PROFESSIONAL ENGINEER

Professional Seal

Revised By:

Drawing Title: FOUNDATION DETAILS
SCALE: 3/4"=1'-0"

Project Title: OPEN MRI SITE PREP

Date: 02/28/2012

Project No. 552-CSI-101

Approved: Project Manager: RANDI FIORINA

Building Number: 335 | Checked: JGA | Drawn: CAD

Drawing No. S3-01

Approved: Service Chief: GARY ABREU

Location: 4100 WEST THIRD STREET DAYTON, OH 45428

VAMC, DAYTON — VA Department of Veterans Affairs

VA FORM 08-6231, OCT 1978

\\SERVER\Project Files\2011\11267 - VA Dayton Addition\S3-01.dwg, 5/7/2012 11:39:48 AM

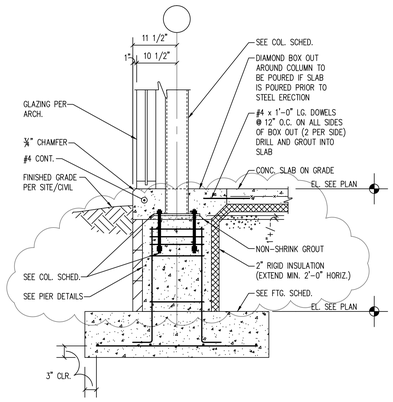

SECTION 1
3/4" = 1'-0"

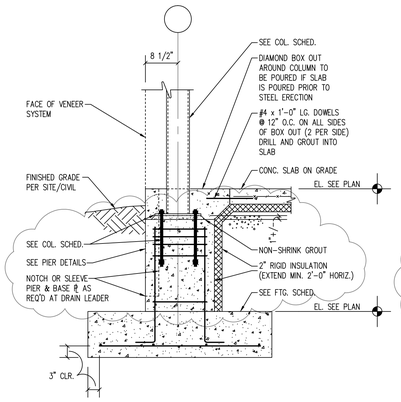

SECTION 2
3/4" = 1'-0"

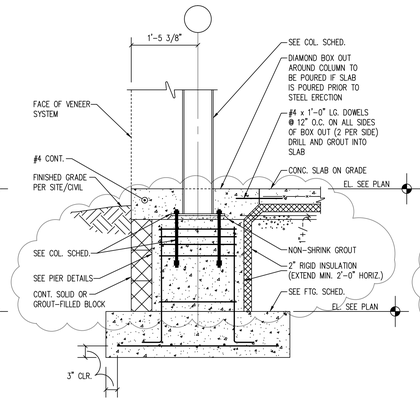

SECTION 3
3/4" = 1'-0"

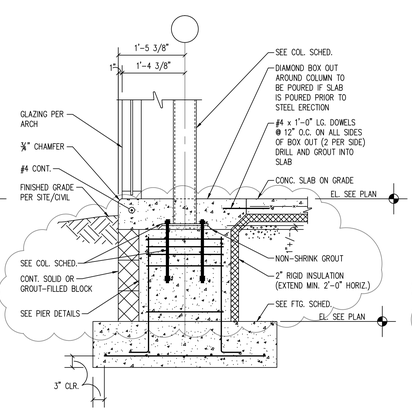

SECTION 4
3/4" = 1'-0"

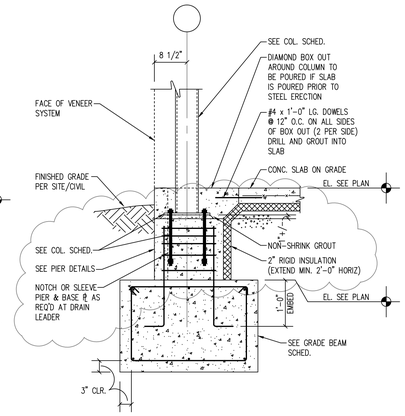

SECTION 5
3/4" = 1'-0"

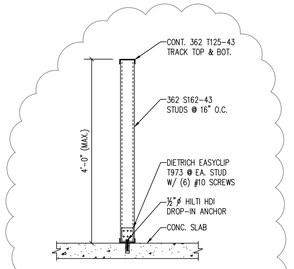

TYPICAL KNEE WALL

SECTION 6
3/4" = 1'-0"

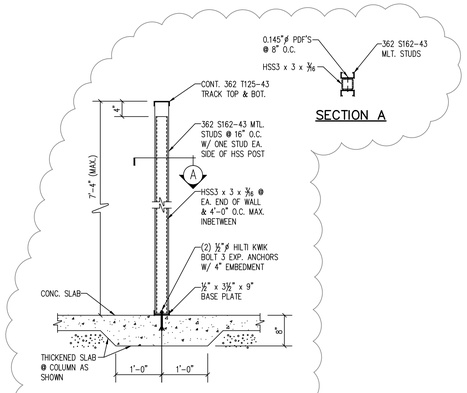

TYPICAL CANTILEVERED WALL

SECTION 7
3/4" = 1'-0"

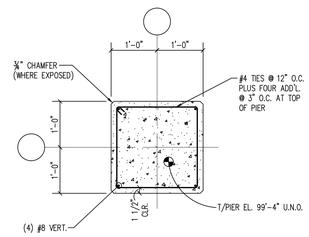

PIER P1

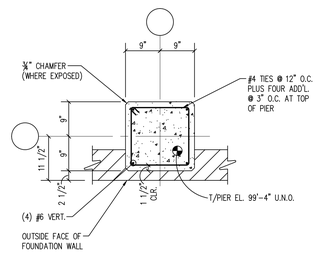

PIER P2

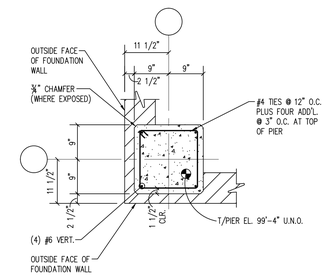

PIER P3

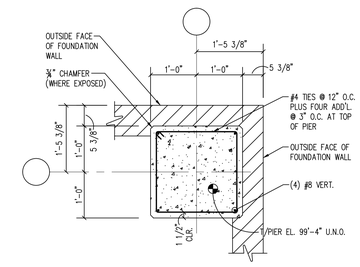

PIER P4

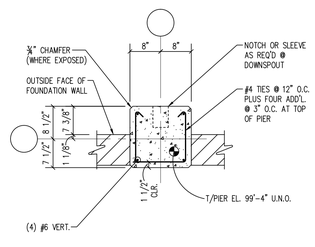

PIER P5

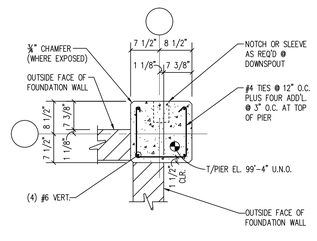

PIER P6

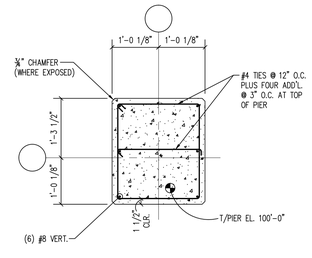

PIER P7

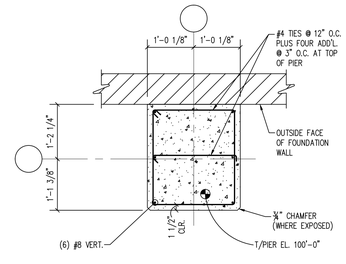

PIER P8

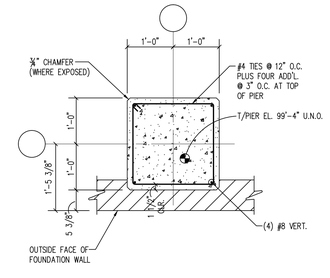

PIER P9

DESIGNER/ENGINEER
CAD OPERATOR
QAQC/CHECKER

Revisions	Date
ISSUED FOR BID	02/28/2012
PRE-BID AMENDMENT	05/10/2012

JEZERINAC GEERS & Associates, Inc.
CONSULTING STRUCTURAL ENGINEERS
5640 Frantz Road • Dublin, Ohio 43017
614-766-0066 • Fax 614-766-1223

STATE OF OHIO — STANLEY N. FULLER #E-47148 — REGISTERED PROFESSIONAL ENGINEER
Professional Seal

Revised By:
– – –

Drawing Title: FOUNDATION PIERS
SCALE: 3/4"=1'-0"
Project Title: OPEN MRI SITE PREP
Date: 02/28/2012
Project No.: 552-CSI-101
Approved: Project Manager: RANDI FIORINA
Building Number: 335
Checked: JGA
Drawn: CAD
Approved: Service Chief: GARY ABREU
Location: 4100 WEST THIRD STREET DAYTON, OH 45428
Drawing No.: S3-02

VAMC, DAYTON
VA Department of Veterans Affairs

VA FORM 08-6231, OCT 1978

\\SERVER\Project Files\2011\1267 - VA Dayton Addition\S3-02.dwg, 5/7/2012 11:41:12 AM

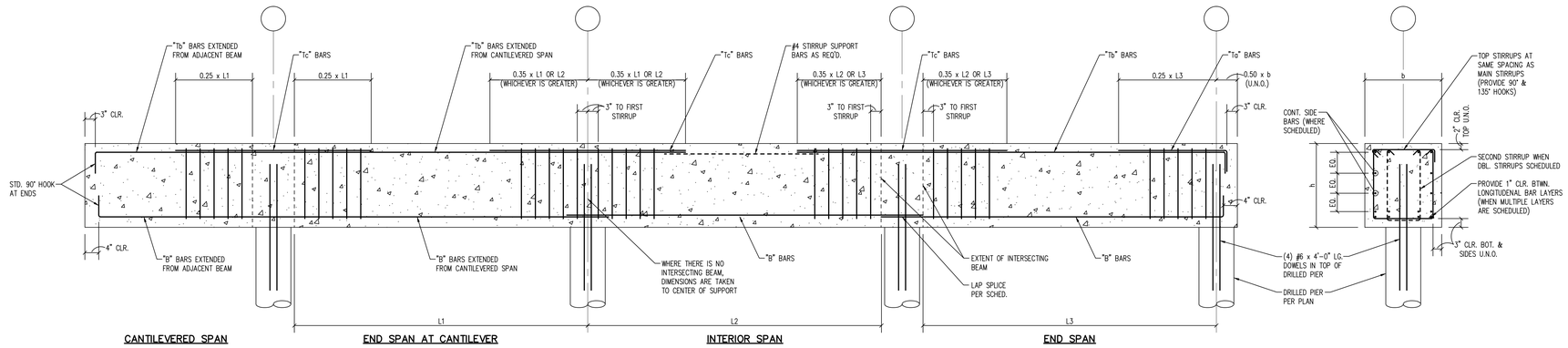

GRADE BEAM SCHEDULE

ABBREVIATIONS

FAB = FROM ADJACENT BEAM
DBL. = DOUBLE TIES
S.F. = SPREAD FOOTING
D.P. = DRILLED PIER

MARK	b	h	REINFORCING STEEL								REMARKS
			LOC.	BOTTOM "B"	TOP "Ta"	TOP "Tb"	TOP "Tc"	STIRRUPS SIZE	STIRRUPS SPACING	SIDE BARS	
GB1a	30"	30"	EXIST.	(2) #8		(6) #8		#4	CONT. @ 12"	(2) #4	3" CLR. TOP 4" CLR. BOT.
			GB3					#4	CONT. @ 12"		
GB1b	30"	30"	GB3	(4) #8		FAB		#4	CONT. @ 12"	(2) #4	3" CLR. TOP 4" CLR. BOT.
			P.5					#4	CONT. @ 12"		
GB1c	30"	30"	P.5	(4) #8		(4) #8		#4	CONT. @ 12"	(2) #4	3" CLR. TOP 4" CLR. BOT.
			Q					#4	CONT. @ 12"		
GB1d	30"	30"	Q	(4) #8		FAB		#4	CONT. @ 12"	(2) #4	3" CLR. TOP 4" CLR. BOT.
			Q.2					#4	CONT. @ 12"		
GB2a	30"	30"	EXIST.	(2) #8		(6) #8		#4	CONT. @ 12"	(2) #4	3" CLR. TOP 4" CLR. BOT.
			GB3					#4	CONT. @ 12"		
GB2b	30"	30"	GB3	(4) #8		FAB		#4	CONT. @ 12"	(2) #4	3" CLR. TOP 4" CLR. BOT.
			P.5					#4	CONT. @ 12"		
GB2c	42"	30"	P.5	(6) #8		(11) #8		#4	CONT. @ 12"	(2) #4	3" CLR. TOP 4" CLR. BOT.
			Q					#4	(16) @ 8" O.C., CONT. @ 12"		
GB2d	42"	30"	Q	(6) #8		FAB		#4	CONT. @ 8"	(2) #4	3" CLR. TOP 4" CLR. BOT.
			Q.2					#4	CONT. @ 8"		
GB3	36"	30"	D.P.	(8) #8		(2) #8		#4	CONT. @ 5" (TO GB2)	(2) #4	
			D.P.					#4	CONT. @ 12" (TO GB2)		
GB4	36"	30"	3.2	(6) #8		(2) #8		#4	CONT. @ 12"	(2) #4	
			D.P.					#4	CONT. @ 12"		
GB5	36"	30"	3.2	(6) #8		(2) #8		#4	CONT. @ 12"	(2) #4	
			D.P.					#4	CONT. @ 12"		
GB6a	24"	30"	3.6	(3) #8	(2) #8			#4	CONT. @ 12"	(2) #4	
			3.2				(3) #8	#4	CONT. @ 12"		
GB6b	24"	30"	3.2	(3) #8			FAB	#4	CONT. @ 12"	(2) #4	
			GB1d		(2) #8			#4	CONT. @ 12"		
GB8	24"	30"	S.F.	(3) #8		(2) #8		#4	CONT. @ 12"	(2) #4	
			GB2b					#4	CONT. @ 12"		
GB9	24"	30"	GB2b	(3) #8		(2) #8		#4	CONT. @ 12"	(2) #4	4" CLR. TOP 5" CLR. BOT.
			GB8					#4	CONT. @ 12"		
GB10	24"	30"	S.F.	(4) #8		(2) #8		#4	CONT. @ 12"	(2) #4	
			3.2					#4	CONT. @ 12"		
GB11a	30"	30"	EXIST.	(2) #8		(4) #8		#4	CONT. @ 12"	(2) #4	3" CLR. TOP 4" CLR. BOT.
			D.P.					#4	CONT. @ 12"		
GB11b	30"	30"	D.P.	(4) #8		FAB		#4	CONT. @ 12"	(2) #4	3" CLR. TOP 4" CLR. BOT.
			S.F.					#4	CONT. @ 12"		

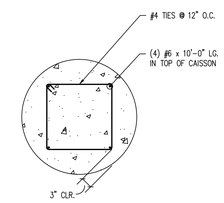

30"ø CAISSON

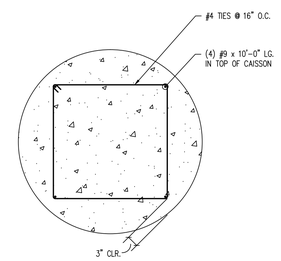

48"ø CAISSON

DESIGNER/ENGINEER
CAD OPERATOR
QAQC/CHECKER

Revisions	Date
ISSUED FOR BID	02/28/2012
PRE-BID AMENDMENT	05/10/2012

JEZERINAC GEERS & Associates, Inc.
CONSULTING STRUCTURAL ENGINEERS
5640 Frantz Road • Dublin, Ohio 43017
614-766-0066 • Fax 614-766-1223

STATE OF OHIO — STANLEY N. FULLER #E-47148 — REGISTERED PROFESSIONAL ENGINEER
Professional Seal

Revised By:

Drawing Title: GRADE BEAM SCHEDULE
SCALE: 3/4"=1'-0"

Project Title: OPEN MRI SITE PREP

Date: 02/28/2012
Project No.: 552-CSI-101

Approved: Project Manager: RANDI FIORINA
Building Number: 335
Checked: JGA
Drawn: CAD

Approved: Service Chief: GARY ABREU
Location: 4100 WEST THIRD STREET DAYTON, OH 45428

Drawing No.: S3-03

VAMC, DAYTON
Department of Veterans Affairs

VA FORM 08-6231, OCT 1978

\\SERVER\Project Files\2011\11267 - VA Dayton Addition\S3-03.dwg, 5/7/2012 11:51:21 AM

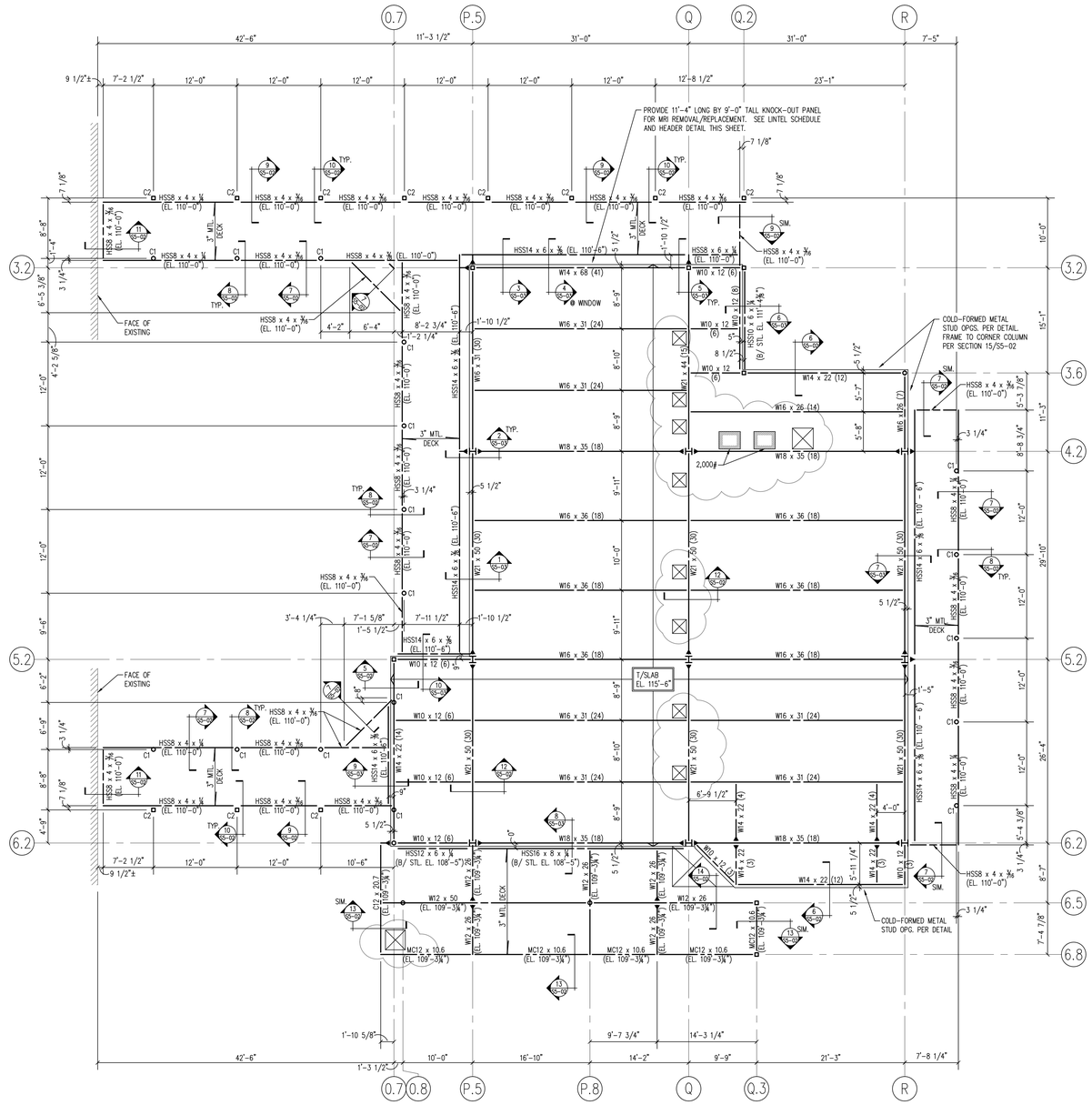

ROOF FRAMING PLAN

1/8" = 1'-0"

NORTH

TYPICAL COLD-FORMED METAL STUD HEADER

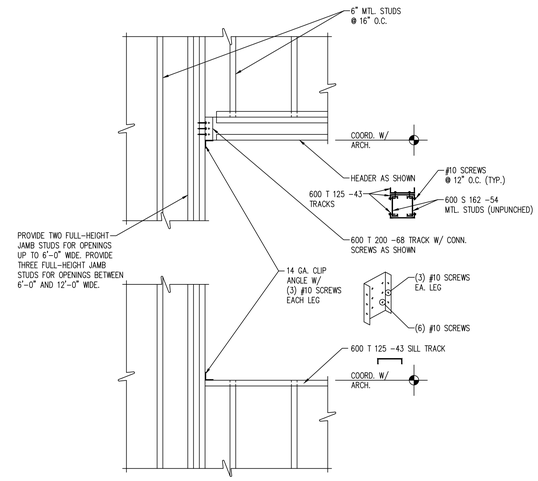

1. PROVIDE COLD-FORMED METAL HEADERS IN ALL EXTERIOR WALL OPENINGS WHETHER SPECIFICALLY NOTED ON DRAWINGS OR NOT.
2. THIS DETAIL ONLY APPLIES TO ROUGH OPENINGS UP TO 12'-0" WIDE.

BRICK LINTEL SCHEDULE

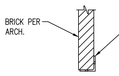

SPAN	SIZE
TO 6'-0"	L4 x 4 x 5/16
6'-0" TO 12'-0"	L6 x 4 x 5/16 LLV

BRICK LINTEL NOTES

1. FURNISH AND INSTALL ALL LOOSE LINTELS REQUIRED FOR ALL OPENINGS IN BRICK, WHETHER SPECIFICALLY NOTES ON DRAWINGS OR NOT.
2. ALL LINTELS AT EXTERIOR LOCATIONS OR OTHERWISE SUBJECT TO WEATHER OR CORROSIVE ATMOSPHERE SHALL BE GALVANIZED.
3. PROVIDE 6" MINIMUM BEARING EACH END.
4. PROVIDE TOW LAYERS OF 20-MIL POLYETHYLENE PLASTIC SHEET BELOW ALL LINTEL BEARINGS AND CAULK FACE JOINT.

FRAMING NOTES

1. DESIGN LOADS:

FUTURE FLOOR	80 PSF
FLAT ROOF LIVE	20 PSF
FLAT ROOF SNOW	22 PSF + DRIFT

2. ROOF CONSTRUCTION:

   5-1/4" LIGHTWEIGHT CONC. SLAB W/ 6x6-W2.9/W2.9 WWF ON 2" x 18 GA. COMPOSITE METAL DECK. SEE SECTION 1/S5-01 FOR TYPICAL ATTACHMENT TO SUPPORTING STRUCTURE.

   3" x 20 GA DEEP RIB METAL DECK. SEE SECTION 2/S5-01 FOR TYPICAL ATTACHMENT TO SUPPORTING STRUCTURE.

3. ☒ INDICATES DECK OPENING. DETERMINE EXACT SIZE AND LOCATION FROM ARCHITECTURAL AND MECHANICAL DRAWINGS. NOT ALL OPENINGS ARE SHOWN ON THE STRUCTURAL DRAWINGS. SEE SECTIONS 3/S5-01 AND 4/S5-01 FOR FRAMING OF ALL OPENINGS EQUAL TO OR GREATER THAN 10" SQUARE. ADDITIONAL FRAMING IS NOT REQUIRED FOR OPENINGS LESS THAN 10" SQUARE.
4. ▶—— INDICATES MOMENT CONNECTION PER DETAIL 5/S5-01 (COLUMN TO BEAM) OR DETAIL 6/S5-01 (BEAM TO BEAM).
5. ( ) INDICATES NUMBER OF 3/4" DIAM. x 3-1/2" LG. HEADED STUDS. SEE DETAILS 1/S5-02 AND 2/S5-02 FOR STUD PLACEMENT AND SECTION 3/S5-02 FOR FLOOR FINISHING REQUIREMENTS.
6. < > INDICATES UNFACTORED BEAM REACTION IN KIPS. FABRICATOR TO PROVIDE CONNECTION ADEQUATE TO SUPPORT LOAD GIVEN. WHERE REACTIONS ARE NOT GIVEN, DESIGN NON-COMPOSITE BEAM CONNECTIONS FOR 50% OF THE UNIFORM LOAD CAPACITY LISTED IN THE THIRTEENTH EDITION AISC MANUAL, TABLE 3-6. COMPOSITE BEAM CONNECTIONS SHALL BE DESIGNED FOR 70% OF THE UNIFORM LOAD CAPACITY.
7. WT# INDICATES SUPPORTED MECHANICAL LOADS. COORDINATE FINAL SIZE, WEIGHT, LOCATION, AND OPENING REQUIREMENTS WITH MECHANICAL CONTRACTOR. TOLERANCE FOR LOCATION OF ACTUAL UNIT IS 3 FEET IN ANY DIRECTION FROM WHERE SHOWN ON THE STRUCTURAL DRAWINGS. PROVIDE SUPPORT FRAME PER SECTION 7/S5-01.
8. ▨ INDICATES EXISTING BUILDING CONSTRUCTION BASED ON ORIGINAL BUILDING DRAWINGS AND LIMITED FIELD INVESTIGATION. EXISTING CONDITIONS, DIMENSIONS, ELEVATIONS, ETC. SHALL BE FIELD VERIFIED PRIOR TO CONSTRUCTION OR FABRICATION OF ANY MATERIAL BY CONTRACTOR PERFORMING WORK IN EXISTING AREAS. REPORT ANY DISCREPANCIES TO ARCHITECT. DO NOT CUT OR REMOVE ANY STRUCTURE, INCLUDING WALLS, COLUMNS, OR ANY SUCH STRUCTURE WITHOUT THE PRIOR APPROVAL OF THE ARCHITECT. WHERE NEW STRUCTURE IS TO BE INSTALLED, PROVIDE SHORING AND BRACING AS REQUIRED TO PROPERLY SUPPORT THE REMAINING STRUCTURE UNTIL THE NEW STRUCTURE IS IN PLACE AND PROPERLY BRACED.
9. TOP OF STRUCTURAL STEEL AT ROOF SLAB = EL. 115'-0 3/4". SEE PLAN FOR TOP OF STEEL ELEVATION AT OTHER LOCATIONS. REFERENCE ELEVATION 100'-0" = TOP OF FIRST FLOOR SLAB ON GRADE.
10. CAMBER IS NOT REQUIRED IN STEEL BEAMS UNLESS INDICATED BY "C= ".
11. SEE SHEET S5-01 FOR COLUMN SCHEDULE.
12. SEE SHEET S1-01 FOR GENERAL STRUCTURAL INFORMATION.

DESIGNER/ENGINEER ____
CAD OPERATOR ____
QAQC/CHECKER ____

Revisions	Date
ISSUED FOR BID	02/28/2012
PRE-BID AMENDMENT	05/10/2012

JEZERINAC GEERS & Associates, Inc.
CONSULTING STRUCTURAL ENGINEERS
5640 Frantz Road • Dublin, Ohio 43017
614-766-0066 • Fax 614-766-1223

STATE OF OHIO — STANLEY N. FULLER #E-67148 — REGISTERED PROFESSIONAL ENGINEER

Professional Seal

Revised By:

Drawing Title	Project Title	Date
ROOF FRAMING PLAN SCALE: 1/8"=1'-0"	OPEN MRI SITE PREP	02/28/2012
Approved: Project Manager RANDI FIORINA	Building Number 335 / Checked JGA / Drawn CAD	Project No. 552-CSI-101
Approved: Service Chief GARY ABREU	Location 4100 WEST THIRD STREET DAYTON, OH 45428	Drawing No. **S4-01**

VAMC, DAYTON — Department of Veterans Affairs

VA FORM 08-6231, OCT 1978

\\SERVER\Project Files\2011\11267 - VA Dayton Addition\S4-01.dwg, 5/7/2012 11:45:19 AM

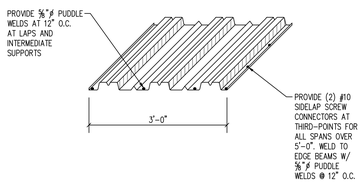

TYPICAL 2" COMP. MTL. DECK ATTACHMENT

SECTION 1 — 3/4" = 1'-0"

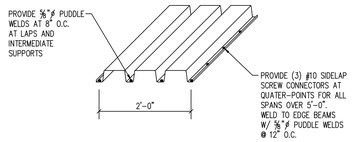

TYPICAL 3" MTL. DECK ATTACHMENT

SECTION 2 — 3/4" = 1'-0"

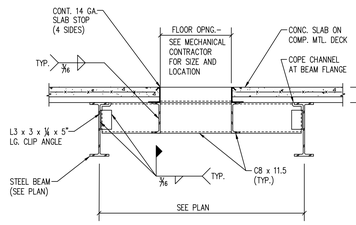

TYPICAL FLOOR OPENING

SECTION 3 — 3/4" = 1'-0"

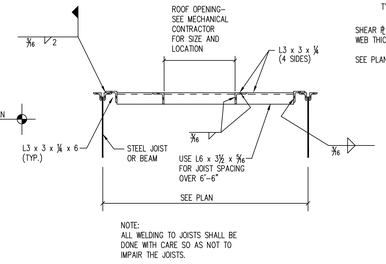

TYPICAL ROOF OPENING

SECTION 4 — 3/4" = 1'-0"

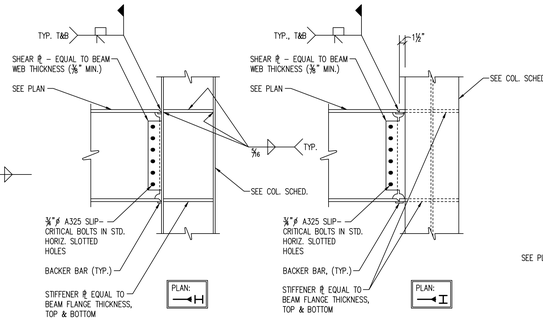

TYPICAL BEAM-TO-COLUMN MOMENT CONNECTION

SECTION 5 — 3/4" = 1'-0"

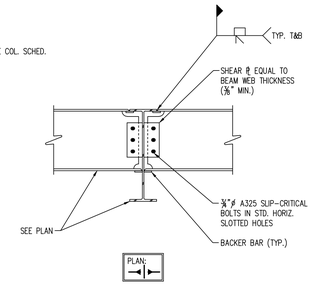

TYPICAL BEAM-TO-BEAM MOMENT CONNECTION

SECTION 6 — 3/4" = 1'-0"

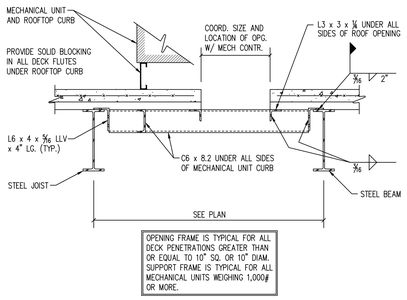

TYPICAL MECHANICAL UNIT SUPPORT AND ROOF OPENING FRAMING

SECTION 7 — 3/4" = 1'-0"

COLUMN SCHEDULE

MARK / ELEVATION	MARK "C1"	MARK "C2"	0.8-6.5 P.8-6.5	Q.3-6.8 Q.3-6.5	0.7-5.2 P.5-3.2 Q.2-3.2 Q-3.2 Q.2-3.6	0.7-6.2 R-3.6	P.5-6.2 Q-6.2 R-6.2 P.5-4.2 Q-4.2 R-4.2	P.5-5.2 Q-5.2 R-5.2
HIGH ROOF TOP OF SLAB EL. 115'-6"						1'-6" TYP.		
LOW ROOF EL. SEE PLAN								
EL. 100'-0"	6"ø X-STR. PIPE	HSS8 x 6 x 3/8	6"ø X-STR. PIPE	HSS8 x 6 x 3/8	HSS8 x 6 x 3/8	6"ø X-STR. PIPE	W10 x 88	W10 x 88
BOTTOM OF BASE PLATE	EL. 99'-5"	EL. 99'-5"	EL. 99'-5"	EL. 100'-1"	EL. 99'-5"	EL. 99'-5"	EL. 99'-5"	EL. 99'-5"
BASE PLATE TYPE	B	A	B	A	A	B	C	C
BASE PLATE SIZE (t x b x d)	3/4" x 14" x 14"	3/4" x 14" x 14"	3/4" x 14" x 14"	3/4" x 14" x 14"	1" x 14" x 14"	1" x 14" x 14"	2" x 20" x 20"	2" x 20" x 20"
ANCHOR BOLT QTY. & SIZE	(4) 1"ø W/ 22" EMBED.	(4) 1"ø W/ 22" EMBED.	(4) 1"ø W/ 22" EMBED.	(4) 1"ø W/ 22" EMBED.	(4) 1"ø W/ 22" EMBED.	(4) 1"ø W/ 22" EMBED.	(6) 1½"ø W/ 22" EMBED.	(6) 1½"ø W/ 22" EMBED.

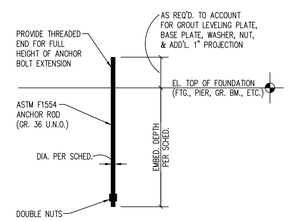

TYPICAL ANCHOR BOLT

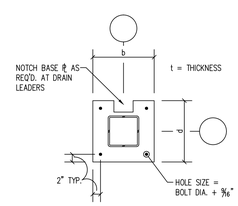

BASE PLATE TYPE A

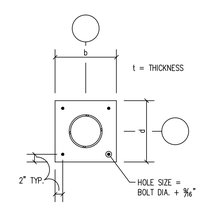

BASE PLATE TYPE B

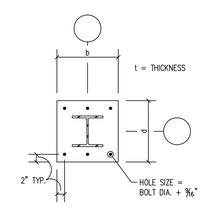

BASE PLATE TYPE C

DESIGNER/ENGINEER ____
CAD OPERATOR ____
QAQC/CHECKER ____

Revisions	Date
ISSUED FOR BID	02/28/2012
PRE-BID AMENDMENT	05/10/2012

JEZERINAC GEERS & Associates, Inc.
CONSULTING STRUCTURAL ENGINEERS
5640 Frantz Road • Dublin, Ohio 43017
614-766-0066 • Fax 614-766-1223

STATE OF OHIO — STANLEY N. FULLEN #E-67148 — REGISTERED PROFESSIONAL ENGINEER

Professional Seal

Revised By:

Drawing Title: FRAMING DETAILS
SCALE: 3/4"=1'-0"

Project Title: OPEN MRI SITE PREP

Date: 02/28/2012
Project No. 552-CSI-101

Approved: Project Manager: RANDI FIORINA

Building Number: 335 | Checked: JGA | Drawn: CAD

Approved: Service Chief: GARY ABREU

Location: 4100 WEST THIRD STREET DAYTON, OH 45428

Drawing No. **S5-01**

VAMC, DAYTON — VA Department of Veterans Affairs

VA FORM 08-6231, OCT 1978

\\SERVER\Project Files\2011\11267 - VA Dayton Addition\S5-01.dwg, 5/7/2012 11:51:32 AM

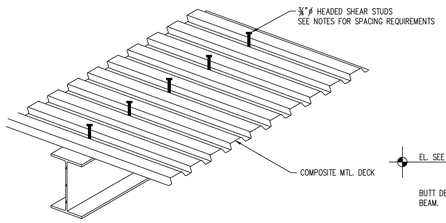

1.) ALL HEADED SHEAR STUDS ARE TO BE ¾"ø x 3½" HIGH AFTER WELDING TO MEMBERS.

2.) PLACE SHEAR STUDS IN ONE ROW ON MEMBER CENTERLINE WHENEVER POSSIBLE. DO NOT EXCEED 2 ROWS OF STUDS SIDE BY SIDE.

3.) THE TOTAL NUMBER OF SHEAR STUDS SHOWN ON PLAN ARE TO BE SPACED EQUALLY ALONG THE LENGTH OF THE MEMBER OR BETWEEN CONNECTED ELEMENTS WHERE MULTIPLE STUD DESIGNATIONS ARE GIVEN. STUDS ARE TO BE A MINIMUM OF 4½" ON CENTER AND A MAXIMUM OF 36" ON CENTER.

4.) SHEAR STUDS PLACED SIDE BY SIDE ARE TO BE A MINIMUM OF 3" ON CENTER.

5.) LOCATE FIRST STUD 6" MINIMUM OR 12" MAXIMUM FROM END OF MEMBER.

SECTION 1 — 3/4" = 1'-0"

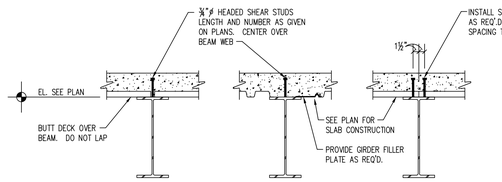

1 ROW STUDS DECK PERPEN. TO BEAM — 1 ROW STUDS DECK PARALLEL TO BEAM — 2 ROW STUDS

TYPICAL COMPOSITE BEAM DETAIL

SECTION 2 — 3/4" = 1'-0"

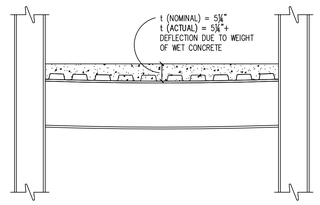

CONTRACTOR NOTE: BEAMS & GIRDERS WILL DEFLECT UNDER THE WEIGHT OF WET CONCRETE. FLOOR IS TO BE FINISHED TO A THEORETICAL LEVEL. ADDITIONAL CONCRETE REQUIRED SHALL BE INCLUDED IN BID PRICE.

SECTION 3 — 3/4" = 1'-0"

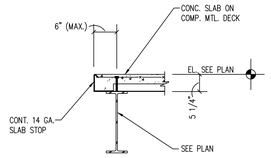

TYPICAL SLAB EDGE

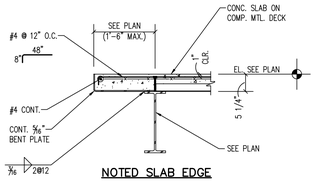

NOTED SLAB EDGE

SECTION 4 — 3/4" = 1'-0"

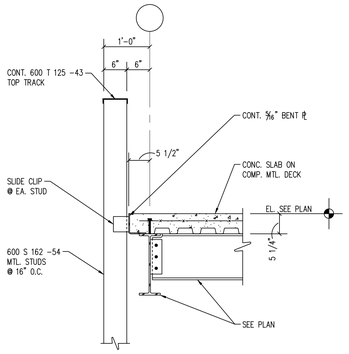

SECTION 5 — 3/4" = 1'-0"

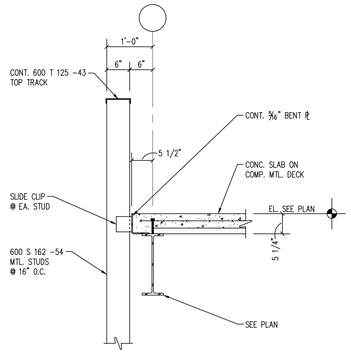

SECTION 6 — 3/4" = 1'-0"

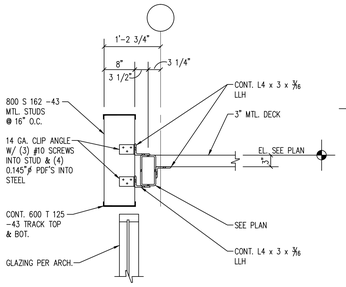

SECTION 7 — 3/4" = 1'-0"

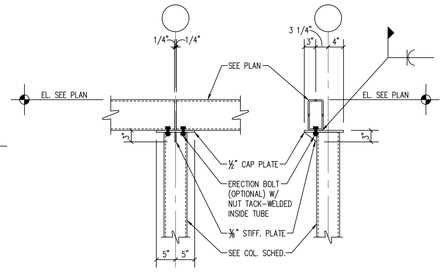

SECTION 8 — 3/4" = 1'-0"

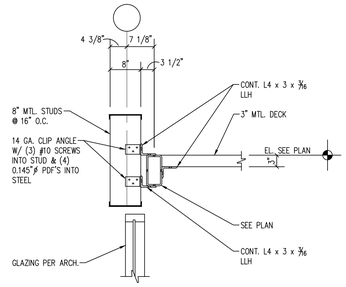

SECTION 9 — 3/4" = 1'-0"

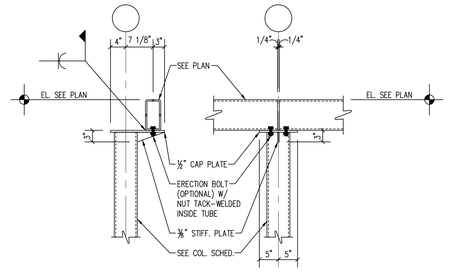

SECTION 10 — 3/4" = 1'-0"

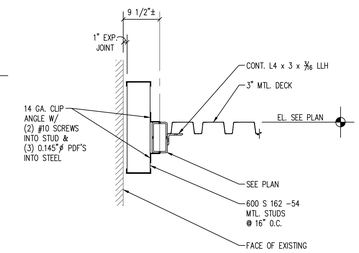

SECTION 11 — 3/4" = 1'-0"

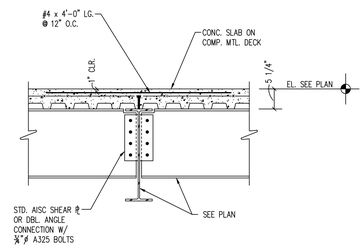

TYPICAL SLAB REINFORCING OVER GIRDER

SECTION 12 — 3/4" = 1'-0"

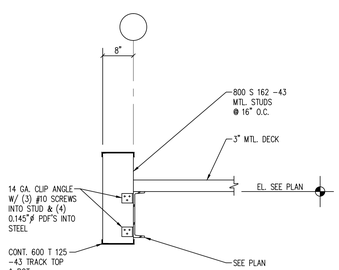

SECTION 13 — 3/4" = 1'-0"

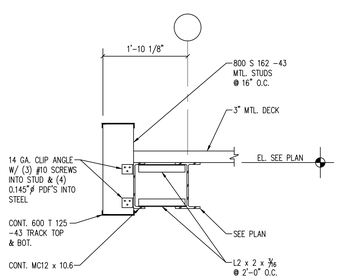

SECTION 14 — 3/4" = 1'-0"

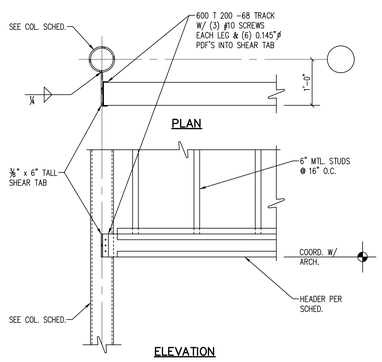

ELEVATION

SECTION 15 — 3/4" = 1'-0"

DESIGNER/ENGINEER ____
CAD OPERATOR ____
QAQC/CHECKER ____

Revisions	Date
ISSUED FOR BID	02/28/2012
PRE-BID AMENDMENT	05/10/2012

JEZERINAC GEERS & Associates, Inc.
CONSULTING STRUCTURAL ENGINEERS
5640 Frantz Road • Dublin, Ohio 43017
614-766-0066 • Fax 614-766-1223

STATE OF OHIO — STANLEY N. FULLER #E-67148 — REGISTERED PROFESSIONAL ENGINEER
Professional Seal

Revised By: ___

Drawing Title: FRAMING DETAILS — SCALE: 3/4"=1'-0"
Project Title: OPEN MRI SITE PREP
Date: 02/28/2012
Project No. 552-CSI-101
Approved: Project Manager: RANDI FIORINA
Building Number: 335 — Checked: JGA — Drawn: CAD
Drawing No. S5-02
Approved: Service Chief: GARY ABREU
Location: 4100 WEST THIRD STREET DAYTON, OH 45428
VAMC, DAYTON — VA Department of Veterans Affairs

VA FORM 08-6231, OCT 1978

\\SERVER\Project Files\2011\11267 - VA Dayton Addition\S5-02.dwg, 5/7/2012 11:51:41 AM