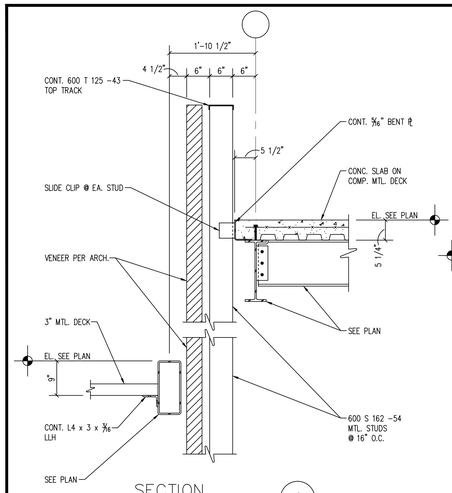

SECTION 1
3/4" = 1'-0"

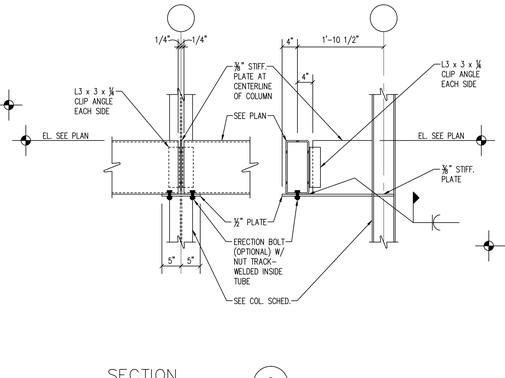

SECTION 2
3/4" = 1'-0"

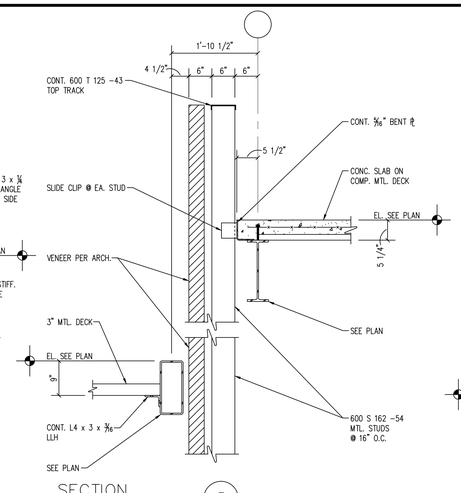

SECTION 3
3/4" = 1'-0"

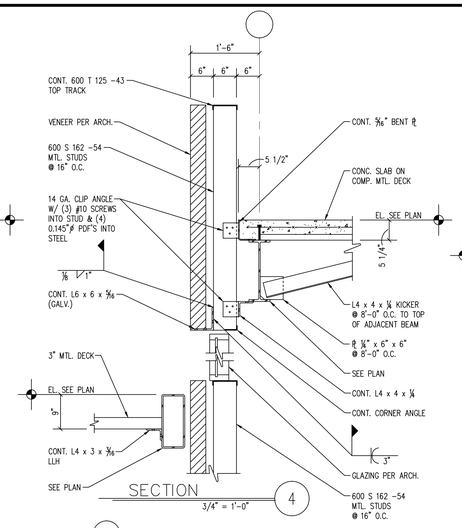

SECTION 4
3/4" = 1'-0"

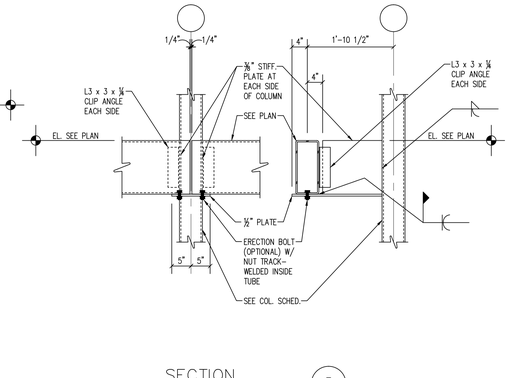

SECTION 5
3/4" = 1'-0"

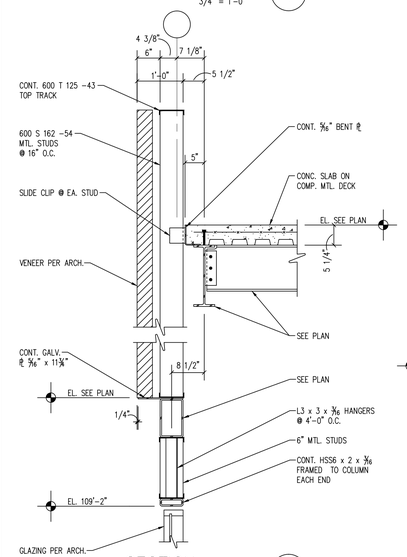

SECTION 6
3/4" = 1'-0"

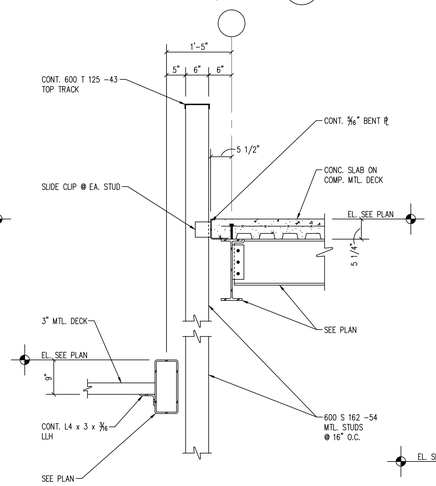

SECTION 7
3/4" = 1'-0"

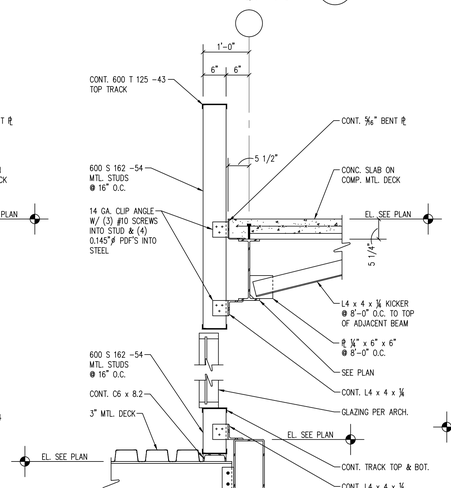

SECTION 8
3/4" = 1'-0"

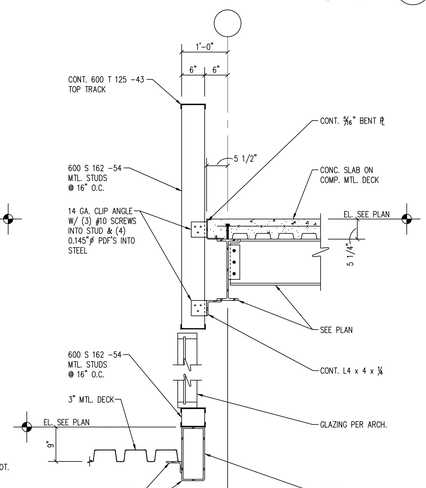

SECTION 9
3/4" = 1'-0"

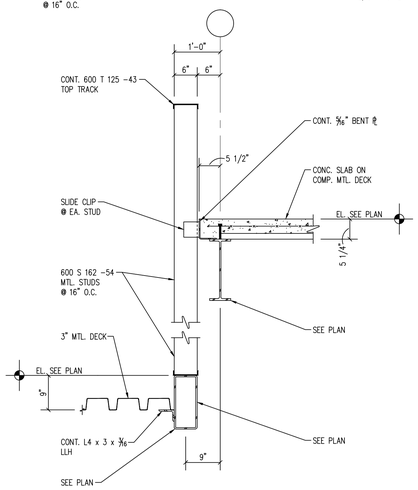

SECTION 10
3/4" = 1'-0"

DESIGNER/ENGINEER
CAD OPERATOR
QAQC/CHECKER

Revisions	Date
ISSUED FOR BID	02/28/2012
PRE-BID AMENDMENT	05/10/2012

JEZERINAC GEERS & Associates, Inc.
CONSULTING STRUCTURAL ENGINEERS
5640 Frantz Road • Dublin, Ohio 43017
614-766-0066 • Fax 614-766-1223

STATE OF OHIO — STANLEY N. FULLER #E-67148 — REGISTERED PROFESSIONAL ENGINEER
Professional Seal

Revised By:
– – –

Drawing Title: FRAMING DETAILS
SCALE: 3/4"=1'-0"

Project Title: OPEN MRI SITE PREP

Date: 02/28/2012
Project No. 552-CSI-101

Approved: Project Manager: RANDI FIORINA
Approved: Service Chief: GARY ABREU

Building Number: 335
Checked: JGA
Drawn: CAD

Location: 4100 WEST THIRD STREET DAYTON, OH 45428

Drawing No. **S5-03**

VAMC, DAYTON
VA Department of Veterans Affairs

VA FORM 08-6231, OCT 1978

\\SERVER\Project Files\2011\11267 - VA Dayton Addition\S5-03.dwg, 5/7/2012 11:51:51 AM

ABBREVIATIONS

A	ADDEUNDUM
ACD	ACCESS DOOR
AFF	ABOVE FINISHED FLOOR
AG	ACCESS GROMMET
ALT	ALTERNATE
ALUM	ALUMINUM
AP	ACCESS PANEL
APC	ACOUSTIC PANEL CEILING
APPROX	APPROXIMATE(LY)
ARCH	ARCHITECT
AVG	AVERAGE
B&B	BALLED & BURLAPPED
BC	BOTTOM OF CURB
BCS	BASE CASSETTE STORAGE
BL	BORROWED LITE
BLDG	BUILDING
BLKG	BLOCKING
BM	BEAM
BN	BULLNOSE
BOT	BOTTOM
BP	BASE PLATE
BSMT	BASEMENT
BW	BOTTOM OF WALL
CC	CUBICAL CURTAIN
C/C	CENTER TO CENTER
CAB	CABINET
CAL	CALIPER
CB	CATCH BASIN
CCT	CUBICLE CURTAIN TRACK
CEMBD	CEMENT BOARD
CFCI	CONTRACTOR FURNISHED, CONTRACTOR INSTALLED
CG	CORNER GUARD
CH	COAT HOOK
CHL	CHANNEL
CIP	CAST-IN-PLACE (CONCRETE)
CJ	CONTROL JOINT
CKBD	CHALKBOARD
CLG	CEILING
CM	CONSTRUCTION MANAGER
CMU	CONCRETE MASONRY UNIT
CO	CLEANOUT
COL	COLUMN
CONC	CONCRETE
CONST	CONSTRUCTION
CONT	CONTINUOUS
CONTR	CONTRACTOR
CORR	CORRIDOR
COTR	
CR	CHART RACK
CRT	COMPUTER TERMINAL
CSWK	CASEWORK
CT	CERAMIC TILE
CTB	COUNTERTOP BRACE
CTSK	COUNTERSUNK
CU	CUBIC
CW	COLD WATER
D	DOOR BASE CABINET
DBL	DOUBLE
DD	DRAWER/DOOR BASE CABINET
DEPT	DEPARTMENT
DET	DETAIL
DF	DRINKING FOUNTAIN
DFB	DRAWER/FILE BASE CABINET
DIA	DIAMETER
DIAG	DIAGONAL
DIM	DIMENSION
DN	DOWN
DO	DRAWER/OPEN
DP	DEEP
DPR	DRAPERY ROD
DR	DOOR
DRS	DOOR(S) SLIDING
DS	DOWNSPOUT
DWG	DRAWING
EA	EACH
ED	EQUAL DRAWERS
EJ	EXPANSION JOINT
EL	ELEVATION
ELEC	ELECTRIC(AL)
ELEV	ELEVATOR
EM	EMERGENCY POWER
EMER	EMERGENCY
EP	ELECTRICAL PANEL
EQ	EQUAL
EQPT	EQUIPMENT
EWC	ELECTRIC WATER COOLER
EX	EXISTING
EXP	EXPANSION
EXT	EXTERIOR
F	FILLER PIECE-¾"MIN-2½"MAX
FA	FIRE ALARM
FAA	FIRE ALARM ANNUNCIATOR
FB	FILM BIN
FD	FLOOR DRAIN
FDA	FREE DRAINING AGGREGATE
FDN	FOUNDATION
FDR	FILE DRAWER W/HANGING FOLDER RACK
FDV	FIRE DEPARTMENT VALVE
FE	FINISHED END
FEB	FIRE EXTINGUISHER BRACKET
FEC	FIRE EXTINGUISHER CABINET
FH	FIRE HYDRANT
FHC	FIRE HOSE CABINET
FIN	FINISH
FIXT	FIXTURE
FLR	FLOOR
FP	FOOT PEDAL VALVE (BY PLUMBING)
FRG	FIRE RESISTANT GLAZING
FRTW	FIRE RETARTDANT TREATED WOOD
FT	FOOT (FEET)
FTG	FOOTING
FURR	FURRING
FUT	FUTURE
FVC	FIRE VALVE CABINET
FZR	FREEZER
GA	GAUGE
GAL	GALLON
GALV	GALVANIZED
GB	GRAB BAR
GC	GENERAL CONTRACT(OR)
GD	GLASS DOOR CABINET
GL	GLASS
GR	GRADE
GYP	GYPSUM
GYPBD	GYPSUM BOARD
H	HIGH
HB	HOSE BIB
HD	DOOR WALL CABINET
HDCP	HANDICAP(PED)
HGT	HEIGHT
HORZ	HORIZONTAL
HP	HIGH POINT
HR	HANDRAIL
HVAC	HEATING, VENTILATION, AIR CONDITIONING
HW	HOT WATER
HZ	OPEN CABINET WITH HORIZONTAL SLOTS
ID	INSIDE DIAMETER
IN	INCH
INSUL	INSULATION
INT	INTERIOR
IP	IRON PIPE
IVT	IV TRACK
JAN	JANITOR
JC	JANITOR CLOSET
JT	JOINT
KBS	KEYBOARD SHELF
KOP	KNOCK OUT PANEL
KS	KNEE SPACE
LAB	LABORATORY
LAM	LAMINATE
LAV	LAVATORY
LB	POUND
LF	LINEAR FEET
LG	LONG
LGT	LIGHT
LLH	LONG LEG HORIZONTAL
LLV	LONG LEG VERTICAL
LP	LOW POINT
LVR	LOUVER
M	MIRROR
MAS	MASONRY
MATL	MATERIAL(S)
MAX	MAXIMUM
MC	MICROWAVE CABINET
ME-	MEDICAL EQUIPMENT
MECH	MECHANICAL
MEP	MECHANICAL, ELECTRICAL, PLUMBING
MEZZ	MEZZANINE
MF	MOBILE DRAWER/FILE CABINET
MFR	MANUFACTURER
MH	MAN HOLE
MIN	MINIMUM
MISC	MISCELLANEOUS
MKBD	MARKERBOARD
MO	MASONRY OPENING
MS	MONITOR SHELF
MTD	MOUNTED
MTL	METAL
NC	NURSE CALL
NEG	NEGATIVE
NIC	NOT IN CONTRACT
NL	NARCOTICS LOCKER (ELECTRICAL CONNECTIONS REQUIRED)
NLWL	NARCOTICS LOCKER WARNING LIGHT
NO	NUMBER
NOM	NOMINAL
NTS	NOT TO SCALE
O	OPEN FACE CABINET
O/O	OUT TO OUT
OA	OVERALL
OC	ON CENTER
OD	OUTSIDE DIAMETER
OFCI	OWNER FURNISHED, CONTRACTOR INSTALLED
OFOI	OWNER FURNISHED, OWNER INSTALLED
OH	OVERHEAD
OPNG	OPENING
OPP	OPPOSITE
OSC	OPEN SINK CABINET
OV	OPEN CABINET W/VERTICAL SLOTS
OZ	OUNCE
PD	PENCIL DRAWER
PLAM	PLASTIC LAMINATE
PLAS	PLASTER
PLBG	PLUMBING
PLYWD	PLYWOOD
POS	POSITIVE
PP	POWER POLE
PR	PAIR
PS	PEDESTAL SUPPORT PANEL
PTD	PAINTED
PTN	PARTITION
PTS	PNEUMATIC TUBE STATION
PTW	PRESERVATIVE TREATED WOOD
PVC	POLYVINYL CHLORIDE
PVMT	PAVEMENT
QT	QUARRY TILE
R	RISER
RB	REMOVABLE RACK
R/W	RIGHT OF WAY
RD	ROOF DRAIN
REF	REFERENCE
REFR	REFRIGERATOR
REINF	REINFORCE(MENT)
REQD	REQUIRED
RES	RESILIENT
REV	REVISION
RM	ROOM
RO	ROUGH OPENING
S	SINK
SB	SINK BASE CABINET
SC	STORAGE CABINET
SCH	SCHEDULE
SCT	SHOWER CURTAIN TRACK
SD	SOAP DISPENSER
SDC	SLIDING DOOR CABINET
SE	SHOWER SEAT
SECT	SECTION
SF	SQUARE FOOT(FEET)
SHL	SHELF
SHT	SHEET
SI	SQUARE INCH
SIM	SIMILAR
SN	SANITARY NAPKIN DISPENSER
SND	SANITARY NAPKIN DISPOSAL
SPB	SPECIMEN BOX
SPD	SRPEAD
SPEC	SPECIFICATION(S)
SPR	SPRINKLER(S)
SQ	SQUARE
SR	SHOWER ROD
SS	SOLID SURFACING
ST	STREET
STA	STATION
STC	SOUND TRANSMISSION COEFFICIENT
STD	STANDARD
STL	STEEL
STO	STORAGE
STR	STRUCTURE
STSTL	STAINLESS STEEL
SUSP	SUSPENDED/SUSPENSION
SY	SQUARE YARD
SYM	SYMMETRICAL
T	TREAD
T&G	TONGUE AND GROOVE
TB	TOWEL BAR
TC	TOP OF CURB
TD	TOWEL DISPENSER
TEMP	TEMPORARY
TERR	TERRAZZO
TKBD	TACKBOARD
TL	TASK LIGHT
TLT	TOILET
TOS	TOP OF STEEL
TPD	TOILET PAPER HOLDER or DISPENSER
TR	TRASH RECEPTACLE
TRANS	TRANSFORMER
TS	TACK SURFACE
TV	TELEVISION
TW	TOP OF WALL
TYP	TYPICAL
UC	UNDERCOUNTER
UL	UNDERWRITERS LABORATORIES
UNO	UNLESS NOTED OTHERWISE
VCT	VINYL COMPOSITION TILE
VERT	VERTICAL
VEST	VESTIBULE
VIF	VERIFY IN FIELD
VIN	VINYL
VP	VISION PANEL
VPLAS	VENEER PLASTER
VT	VERTICAL PIGEON HOLE SLOTS
W	WIRE PASS THROUGH COVER
W/	WITH
W/O	WITHOUT
WD	WOOD
WGT	WEIGHT
WP	WALL PROTECTION
WR	WARDROBE CABINET
WS	WIRE SHELVING
WSCT	WAINSCOT
WWF	WELDED WIRE FABRIC
YD	YARD DRAIN / YARD (UNIT)

MATERIAL INDICATIONS/SECTION

EARTH
FREE DRAINING AGGREGATE
CAST IN PLACE CONCRETE
PRECAST CONCRETE
BRICK
CONCRETE MASONRY UNIT
METAL (SMALL SCALE)
METAL (LARGE SCALE)
WOOD (ROUGH) CONTINUOUS
WOOD (ROUGH) NON-CONTINUOUS
WOOD (FINISHED)
PLYWOOD
PARTICLE BOARD
INSULATION (BATT)
INSULATION (RIGID)
INSULATION (SPRAYED)
EXISTING CONSTRUCTION
SHAFT WALL
ACOUSTICAL CEILING TILE /PANEL
FIRESTOP MATERIAL

GRAPHIC SYMBOLS

SECTION NUMBER
SHEET NUMBER
SECTION NUMBER (SAME SHEET)
ELEVATION NUMBER
SHEET NUMBER
ELEVATION NUMBER (SAME SHEET)
ENLARGED PLAN/DETAIL NUMBER
SHEET NUMBER
ENLARGED PLAN/DETAIL NUMBER (SAME SHEET)
SHEET NUMBER (MATCH LINE)
NEW COLUMN GRID LINE DESIGNATION
EXISTING COLUMN GRID LINE DESIGNATION
DATUM LINE
CODED NOTE NUMBER
ADDITIONAL NOTE-SPECIFIC TO THE DESIGNATED PARTITION
PARTITION TYPE NUMBER
CHANGE ORDER (C.O.) OR, ADDENDUM (A) OR, SUPPLEMENTAL INSTRUCTIONS (S.I.)
REVISION ISSUE NUMBER
MEDICAL EQUIPMENT (ME-) NUMBER
HIDDEN, FUTURE, OR EXISTING TO BE REMOVED
ANGLE OTHER THAN 90°
BENCH MARK
STARTING POINT
SIGNAGE
FIRE HYDRANT
TEST BORING
UTILITY POLE
PROPERTY LINE
SECURITY FENCE
WOOD FENCE
EXISTING CONTOUR
NEW CONTOUR
EXISTING ELEVATION
NEW ELEVATION
LIGHT STANDARD

SYMBOLS

℄	CENTER LINE	#	POUND OR NUMBER
&	AND	@	AT
∠	ANGLE	±	PLUS OR MINUS
Ø	DIAMETER	⅊	PLATE OR PROPERTY LINE

WALL LEGEND

TYPICAL INTERIOR WALL
BORROWED LIGHT (VISION PANEL)
CASED OPENING
BI FOLD
RECESSED ITEM
LOUVER
POCKET
ACCORDIAN
SLIDING

DOOR LEGEND

NEW DOOR (TYPICAL)
DOUBLE ACTING
180° SWING
DUTCH
EXISTING TO BE REMOVED
EXISTING TO REMAIN
PAIR WITH SIDE FRAME
DOUBLE EGRESS
DOUBLE EGRESS WITH SIDE FRAME

GENERAL PROJECT NOTES

1. CONTRACTOR SHALL VERIFY EXISTING CONDITIONS BEFORE START OF CONSTRUCTION. EXISTING BUILDING INFORMATION IS BASED ON ORIGINAL CONSTRUCTION DRAWINGS (PROVIDED BY THE VA) AND IS NOT INTENDED TO REPRESENT AS-BUILT CONDITIONS. CONTRACTORS SHALL BE RESPONSIBLE FOR FIELD VERIFYING ALL EXISTING DIMENSIONS AND CONDITIONS. SITE INFORMATION IS BASED ON SURVEY COMPLETED BY EMH&T, DATED 2012 AND REFLECTS THE MOST CURRENT SITE INFORMATION AVAILABLE. REPORT ANY DISCREPANCIES TO THE COTR BEFORE THE START OF CONSTRUCTION.
2. DO NOT SCALE DRAWINGS. IF DIMENSIONS CANNOT BE OBTAINED BASED ON DRAWING INFORMATION, CONSULT COTR FOR CLARIFICATION.
3. ALL DIMENSIONS ARE TO FINISHED FACE OF WALL AND COLUMN CENTER LINE UNO. WHERE DISCREPANCIES OCCUR BETWEEN FLOOR PLANS, DETAILS AND LARGE SCALE PLANS, CONSULT COTR FOR CLARIFICATION. WHERE DISCREPANCIES OCCUR BETWEEN ARCHITECTURAL DRAWINGS AND ENGINEERING DRAWINGS, CONSULT COTR FOR CLARIFICATION.
4. SEE LIFE SAFETY PLANS FOR LOCATION OF RATED PARTITIONS AND FULL HEIGHT NON-RATED PARTITIONS. CONSTRUCTION SHALL BE PER TYPICAL NON-BEARING TYPE P-1A (U.N.O.) AND SHALL EXTEND AND BE ANCHORED TO FLOOR DECK ABOVE.
5. ALL PARTITIONS SCHEDULE TO RECEIVE ACCOUSTICAL INSULATION SHALL EXTEND AND BE ANCHORED TO FLOOR DECK ABOVE (THIS INCLUDES WALLBOARD AND ACOUSTICAL INSULATION).
6. ALL FULL HGT. PARTITIONS TO HAVE ACOUSTIC SEALANT AT BOTTOM PLATE AND TOP PLATE.
7. ALL DOOR FRAMES TO BE HOLLOW METAL (U.N.O.)
8. SHADED AREAS ON DRAWINGS, IN GENERAL, INDICATE EXISTING CONSTRUCTION TO REMAIN.
9. REFER TO THE L SERIES DRAWINGS FOR SHEET INDEX, ABBREVIATIONS, GRAPHIC SYMBOLS, AND INTERIOR PARTITION TYPES.
10. REFER TO LS SERIES DRAWINGS FOR PARTITION TYPES, FIRE RATED ASSEMBLIES, SMOKE COMPARTMENTS AND APPLICABLE CODE DATA.
11. REFER TO FLOOR PLANS FOR DOOR SCHEDULE.
12. REFER TO A4 SERIES DRAWINGS FOR DOOR AND BORROWED LIGHT ELEVATIONS AND DETAILS.
13. REFER TO A5 SERIES DRAWINGS FOR ARCHITECTURAL WOODWORK ELEVATIONS AND DETAILS.
14. REFER TO A6 SERIES DRAWINGS FOR TYPICAL MOUNTING HEIGHTS AND DETAILS.
15. ALL FIRE RATED PARTITION INTERSECTIONS WITH NON-RATED OR LOWER RATED PARTITIONS WILL CONTINUE THROUGH THE INTERSECTION. SEE DETAIL 9/A6-04.
16. ALL WOOD BLOCKING SHALL BE FIRE RETARDANT TREATED (FRTW). ALL WOOD BLOCKING IN EXTERIOR ENCLOSURE CONSTRUCTION SHALL ALSO BE PRESERVATIVE TREATED (PTW).
17. ARCHITECTURAL DRAWINGS DO NOT NECESSARILY SHOW ALL FRAMING/STRUCTURAL COMPONENTS.
18. ALL MATERIALS AND INFORMATION NOTED ON ANY OF THE WALL SECTIONS OR DETAILS APPLY TO ALL OTHER SECTIONS AND DETAILS WHERE SIMILAR CONDITIONS OCCUR WHETHER NOTED OR NOT.
19. PROVIDE ALL TRANSITION STRIPS AND TERMINATION STRIPS AS REQUIRED AT CHANGE IN FLOOR MATERIAL AND/OR COLOR TO ASSURE SMOOTH TRANSITION OF FINISHES. PROVIDE TRANSITION AT CENTERLINE OF DOORS WHERE POSSIBLE, UNO.
20. REFER TO PROJECT MANUAL AND A7 SERIES DRAWINGS FOR SCHEDULE OF FINISHES AND ROOM FINISH SCHEDULE FOR FINISH SYSTEM SCHEDULE & MATERIAL COLOR SCHEDULE. FINISHES NOTED ARE GENERAL FINISHES FOR ROOMS. ADDITIONAL FINISHES AND ACCENTS MAY BE REQUIRED AS PER DETAILS, PROJECT MANUAL, ELEVATIONS, AND ADDITIONAL NOTES.
21. CEILING AND SOFFIT HEIGHTS ARE SHOWN ON THE ARCHITECTURAL REFLECTED CEILING PLANS.
22. EQUIPMENT SHOWN AS DASHED IN PLAN OR ELEVATION IS VV (VA FURNISHED, VA INSTALLED). SEE DRAWINGS AND PROJECT MANUAL FOR ADDITIONAL INFORMATION. CONTRACTOR TO COORDINATE INSTALLATION REQUIREMENTS. CONTRACTOR TO PROVIDE BLOCKING FOR MISCELLANEOUS EQUIPMENT AND FURNISHINGS.
23. PROVIDE A WOOD DOOR AND STEEL FRAME WITH THREE HINGES PER LEAF, LOCKSET, DOOR CLOSER AND DOOR STOP FOR DOORS NOT SCHEDULED.
24. INSTALL SUPPLEMENTARY FRAMING, METAL BLOCKING / STRAPPING AND BRACING AS REQUIRED FOR SUPPORT OF FIXTURES, EQUIPMENT, TOILET ACCESSORIES, FURNISHINGS AND SIMILAR CONSTRUCTION.
25. PROVIDE FIRE AND/OR SMOKE DAMPERS AT ALL LOCATIONS REQUIRED BY LAW IN MECHANICAL DUCTWORK THAT PENETRATES FIRE/SMOKE WALLS.
26. ALL WORK SHALL BE PERFORMED IN ACCORDANCE WITH NFPA, ADAAG, LOCAL STATE AND FEDERAL CODES AND ORDINANCES THAT GOVERN PROJECT LOCATION AND THE LATEST EDITION OF THE NATIONAL ELECTRIC CODE.
27. PROVIDE TEMPORARY DUST PARTITIONS AND TEMPORARY EXIT CORRIDORS AND ROUTING SAFETY DEVICES COORDINATED WITH LOCAL CODE OFFICIALS. NOTE: TO COMPLY WITH VA I.L.S.M. AND SAFETY PLAN.
28. CONTRACTOR SHALL MAINTAIN ALL SPRAY-ON FIREPROOFING (NEW AND EXISTING) APPLIED TO ALL STRUCTURAL STEEL/ELEMENTS TO ACHIEVE THE REQUIRED FIRE RATINGS. CONTRACTOR TO PATCH ANY DISTURBED AREAS CREATED BY CONSTRUCTION.
29. CONTRACTOR SHALL MAINTAIN FIRE/SMOKE RATING OF ALL PENETRATIONS THROUGH EXISTING RATED WALLS/FLOORS/CEILINGS. SEAL ALL WALL/FLOOR/CEILING PENETRATIONS WITH APPROPRIATE UL LISTED MATERIALS WHICH MEET OR EXCEED EXISTING WALL/FLOOR/CEILING RATING.
30. CONTROL JOINTS IN WALLBOARD PARTITIONS SHALL BE LOCATED WHERE:
    A. A PARTITION OR FURRING ABUTS A STRUCTURAL ELEMENT, DISSMILAR MALL OR CEILING.
    B. A CEILING ABUTS A STRUCTURAL ELEMENT, DISSLILAR WALL OR PARTITION OR OTHER VERTICAL PENETRATION.
    C. A PARTITION OR FURRING RUN EXCEEDS 30'-0". IF THERE IS A DOOR OPENING IN THE 30'-0" RUN, LOCATE THE CONTROL JOINT AT BOTH SIDES OF THE JAMB FROM THE HEAD OF DOOR TO THE TOP OF THE PARTITION.
27. REVIEW MEDICAL CENTER'S ADMINISTRATIVE POLICY FOR "INTERIM LIFE SAFETY MEASURES" (ILSM) PRIOR TO START OF WORK. THESE REQUIREMENTS SHALL BE INCORPORATED INTO ALL CONSTRUCTION WORK FOR THE DURATION OF THE PROJECT. SEE PROJECT MANUAL SECTION 01 00 00.
28. POST SIGNAGE FOR ILSM LEVEL WITH ALL APPLICABLE MEASURES, CONSTRUCTION NOTICES AND PROJECT COORDINATOR'S NAME WITH PHONE NUMBER AND EMERGENCY CALL LIST.
29. EXISTING FIRE SUPPRESSION SYSTEM SHALL REMAIN OPERATIONAL THROUGHOUT ALL PHASES OF THE WORK.
30. WHEN SUSPECTED HAZARDOUS MATERIALS ARE ENCOUNTERED, DO NOT DISTURB THE MATERIALS. CONTACT COTR FOR TESTING AND ABATEMENT.
31. COORDINATE BUILDING ACCESS AND MATERIAL DELIVERY WITH COTR. REFER TO PROJECT MANUAL AND DRAWINGS FOR ADDITIONAL INFORMATION.
32. PROVIDE STRUCTURAL STUDS @ 16" O.C. ANCHORED TO STRUCTURE ABOVE AND BELOW DIRECTLY BEHIND THE WALL BRACKET, PLATE OR HANGER STRIP FOR ALL SCHEDULED AND VA FURNISHED WALL HUNG ITEMS AND WHERE SPECIFIED BY MANUFACTURERS RECOMMENDATIONS FOR INSTALLATION (INCLUDING, BUT NOT LIMITED TO TVs, MONITORS, CABINETS, SHELVES, TACK/MARKERBOARDS, ETC.). WHERE THE STRUCTURAL STUD CANNOT BE EXACTLY SO LOCATED, OR THE DIMENSIONS OF THE ITEM REQUIRE MORE THEN ONE SUCH STUD, PROVIDE 6" 16 GA. CONTINIOUS HORIZONTAL STEEL STRAPPING THE FULL LENGTH OF THE ITEM TO BE HUNG @ 2'-0" O.C. VERTICALLY, SPANNING AND MECHANICALLY FASTENED TO ADJACENT STRUCTURAL STUDS SET THE FULL LENGTH OF THE WALL HUNG ITEM APART.

NOTE:

MRI MACHINE IS TO BE FURNISHED BY THE VA AND INSTALLED BY THE VA OR VA'S VENDOR. THE CONTRACTOR SHALL COORDINATE ALL ASSOCIATED WORK WITH THE VA AND THE CONTRACT DOCUMENTS, SHALL PROTECT AND SECURE THE VA EQUIPMENT ITEMS ON THE SITE, AND SHALL ADVISE THE COTR OF ANY DAMAGE OR DEFICIENCIES ASSOCIATED WITH THE EQUIPMENT ITEMS PRIOR TO THEIR INSTALLATION. THE CONTRACTOR SHALL COORDINATE HIS WORK WITH EACH SUPPLIER OF VA FURNISHED EQUIPMENT AND THE INSTALLING ENTITY.

DESIGNER/ENGINEER DLL
CAD OPERATOR JG,TK,CK
QA/QC/CHECKER RDB

Revisions	Date
ISSUED FOR BID	02/28/2012
PRE-BID AMENDMENT	05/10/2012

DesignLevel
455 Arden Road Columbus, OH 43214 p. 614.267.6603
www.DesignLeveLarchitecture.com
planning interior design architecture

© Copyright 2012

STATE OF OHIO ROBERT D. BARGA 07459 REGISTERED ARCHITECT
Professional Seal

Revised By:

Drawing Title: LEGEND SHEET
SCALE: NOT-TO-SCALE
Project Title: OPEN MRI SITE PREP
Date: 02-28-2012
Project No. 552-CSI-101
Approved: Project Manager: RANDI FIORINA
Building Number: 335
Checked: DESIGNLEVEL
Drawn:
Approved: Service Chief: GARY ABREU
Location: 4100 WEST THIRD STREET DAYTON, OH 45428
Drawing No. L1

VAMC, DAYTON
VA Department of Veterans Affairs

VA FORM 08-6231, OCT 1978

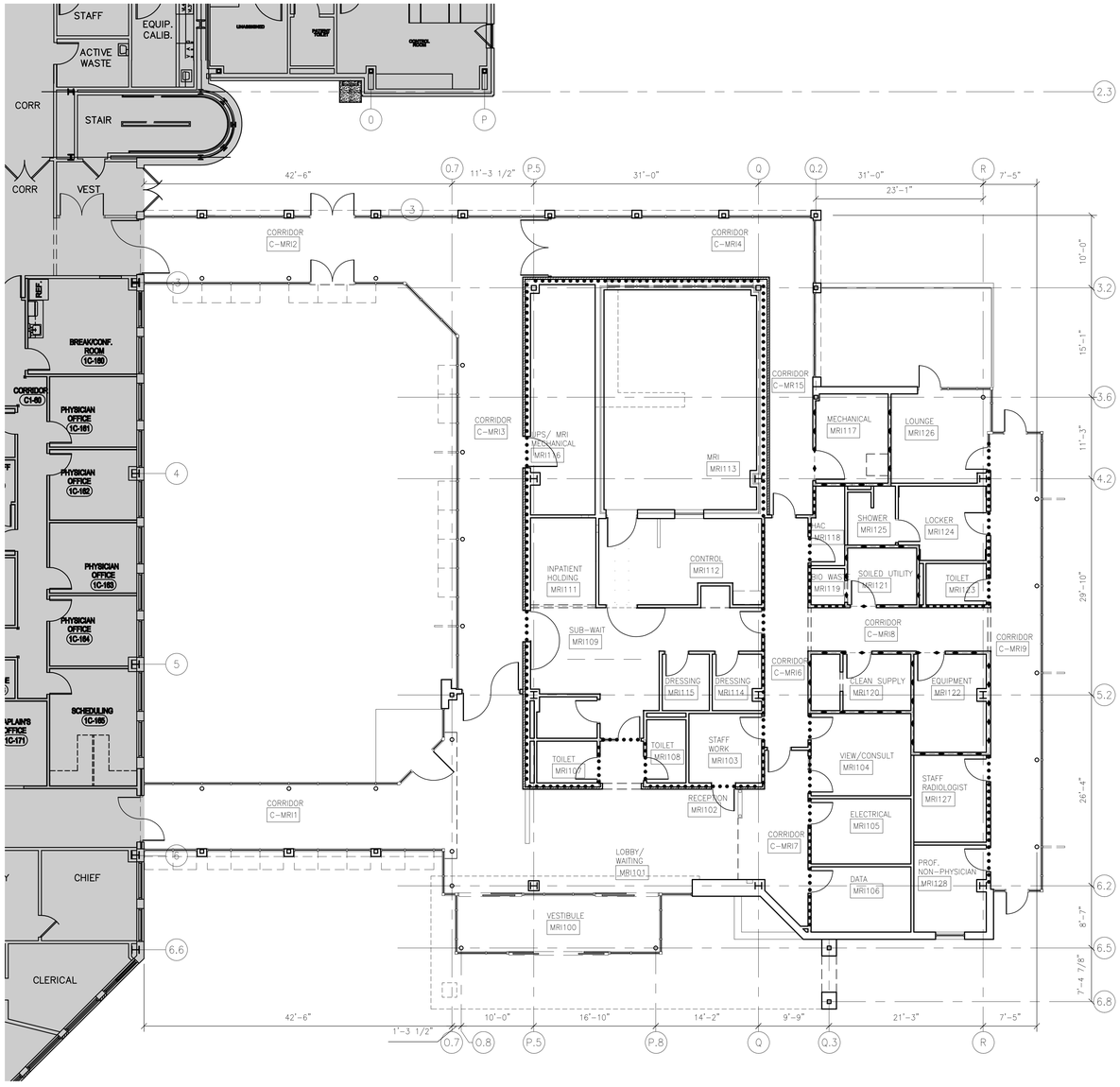

1 LIFE SAFETY PLAN

1/8"=1'-0"

CODE DATA INFORMATION

1. **PROJECT TITLE:** 11028 DOVA OPEN MRI SITE PREP
2. **ZONING CLASSIFICATION:**
3. **TYPE OF WORK** (circle all that apply)
   - **A. New Structure** [Yes] No
   - **B. Addition** [Yes] No
     - Fire Wall: Yes [No]
   - **C. Alteration** Yes No
     - Article 34 Yes No
   - **D. Change of Use** Yes [No]
     - Entire Structure Yes No
     - Partial Yes No
     - Previous Use
     - Previous Use Group
4. **EXISTING STRUCTURE ANALYSIS:**
   - **A. Occupancy Description** Hospital — Use Group I-2
   - **B. Type of Construction** IBC 1A/NFPA Type I (442)
   - **C. Occupant Load - Exiting Information - Area of Renovation/Alteration**

	Floor Area	Occupant Load	Egress Capacity	No. of Exits
Basement				
1st				
2nd				
3rd				
4th & Above				

   - **D. Allowable maximum floor area**
     - Does the above include increases for
       - excess frontage? Yes No
       - total sprinklers? Yes No
   - **E. Number of stories above grade:** 9 — **Height**
     - Is there a Basement? Yes No
     - Total stories including Basements: 10
   - **F. Fire Protection Systems**
     - Limited Sprinkler System: Yes [No]
     - Full Automatic Sprinkler System: [Yes] No
     - Standpipe System: Yes No
     - Smoke Control/Removal System: Yes [No]
     - Unlimited Area Building: [Yes] No
   - **G. Fire Alarm Systems**
     - Fire Alarm System: [Yes] No
     - Automatic Fire Detection Systems: [Yes] No
   - **H. Accessible to the Disabled:** Yes No
     - If No, state exception:
5. **NEW STRUCTURE ANALYSIS:**
   - **A. Occupancy Description** Hospital — **Use Group** I-2
   - **B. Mixed Use:** Yes [No]
     - If Yes:
       - Non-separated Use [Yes] No
       - Separated Uses Yes No
       - Separate Buildings Yes No
   - **C. Type of Construction** IBC 1B/NFPA Type II (222)
   - **D. Fire Resistive Construction**

			Fire Test Design Numbers
Exterior Bearing Walls	0	hr.	
Fire Walls	NA	hr.	
Floor/Ceiling	2	hr.	D907
Roof/Ceiling	1	hr.	P801
Columns/Bearing Walls	1 & 2	hr.	1 hr Roof/Ceiling X634 2 hr Floor/Ceiling X771
Exit Enclosures	NA	hr.	
Shafts	NA	hr.	
Corridors	0	hr.	
Tenant Separation	NA	hr.	

   - **E. Occupant Load - Exiting Information**

	Floor Area	Occupant Load	Egress Capacity	No. of Exits
Basement				
1st	6,586	27.4 @240 factor	720	4
2nd				
3rd				
4th & Above				

   - **F. Allowable maximum floor area** — Maximum travel distance to Exit 50'/200' Allowable
     - (If Mixed Use building, proceed to "G" below.)
   - **G. Ratio of Mixed Uses per Floor:**

Floor Area	Mixed Uses?		Mixed Use Types	Separated Uses		Sum of Ratios
Basement	Yes	No		Yes	No	
1st	Yes	No		Yes	No	
2nd	Yes	No		Yes	No	
3rd	Yes	No		Yes	No	
4th & Above	Yes	No		Yes	No	

   - **H. Does "F" or "G" above include increases for:**
     - Excess frontage? Yes No
     - Total sprinklers? [Yes] No
   - **I. Number of stories above grade:** 1 — **Height** 15'-6"
     - Is there a Basement? No
     - Total stories including Basements: 1
   - **J. Fire Protection Systems**
     - Limited Sprinkler System: Yes No
     - Full Automatic Sprinkler System: [Yes] No
     - Standpipe System: Yes No
     - Smoke Control/Removal System: Yes No
     - Unlimited Area Building: [Yes] No
   - **K. Fire Alarm Systems**
     - Fire Alarm System: [Yes] No
     - Automatic Fire Detection System: [Yes] No
   - **L. Horizontal Exits** Yes No
   - **M. Structural Loads:** Roof Live 20 PSF; Roof Dead 25 PSF; Floor Live 80 PSF; Floor Dead 70 PSF; Snow Load 22 PSF; Wind Speed 90 MPH; Soil Bearing Pressure 2500 PSF
   - **H. Accessible to the Disabled:** [Yes] No
     - If No, state exception:
6. **SPECIAL REQUIREMENTS/REMARKS:** Existing Structure conforms to provisions within NFPA Chapter 19.
   1 hr smoke barrier establishes addition as separate smoke compartment.
   Existing Structure conforms to provisions of IBC 403. IBC 403.3 allows a 1 hr fire rating reduction from 1A to 1B.

Format Developed by the Ohio Design Professionals and Code Analysts, Inc.

1

CONSTRUCT TO EQUIVALNCY COMPLIANCE WITH NFPA 101.

CONSTRUCTION SHALL BE PER TYPICAL NON-BEARING TYPE P-1A (UNO).

SEE FLOOR PLANS FOR OTHER TYPE SCHEDULED PARTITIONS.

2003 IBC CODE LEGEND

- 2-HOUR FIRE BARRIER
- 1-HOUR FIRE BARRIER (Reference IBC Section 706) FULL HEIGHT CONSTRUCTION TOP AND BOTTOM SEALED PENETRATIONS SEALED
- 1-HOUR FIRE PARTITION
- 1-HOUR (MIN.) SMOKE BARRIER
- NON-RATED SMOKE PARTITION (Reference IBC Section 710) FULL HEIGHT CONSTRUCTION TOP AND BOTTOM SEALED PENETRATIONS SEALED

NON-BEARING PARTITIONS

TYPE	RATING	FIRE/STC	DESCRIPTION	CONSTRUCTION
P1A P1B	(NONE)	(FIRE) (NONE) (STC) (45-49) GA FILE NO WP1072	ONE LAYER 5/8" TYPE "X" GYPSUM BOARD EACH SIDE OF METAL STUDS @ 16" OC WITH 3 1/2" ACOUSTICAL INSULATION FRICTION FIT IN STUD SPACE A-3 5/8" STUD B-6" STUD	EXTEND SOUND RATING INTO DECK FLUTES; ACOUSTICAL SEALANT (TYP); UNDERSIDE OF STRUCTURE; DEFLECTION TRACK; CEILING LINE; (Plan View) A=4 7/8" B=7 1/4"; MTL STUD A - 3 5/8" B - 6"; ACOUSTICAL SEALANT (TYP); SCHEDULED BASE (TYP); FLOOR

NON-BEARING PARTITIONS

TYPE	RATING	FIRE/STC	DESCRIPTION	CONSTRUCTION
P2A P2B	1 HR	(FIRE) UL U465 (STC) (45-49) GA FILE NO WP1081	ONE LAYER 5/8" TYPE "X" GYPSUM BOARD EACH SIDE OF METAL STUDS 16" OC WITH 3 1/2" ACOUSTICAL INSULATION FRICTION FIT IN STUD SPACE A-3 5/8" STUD B-6" STUD	EXTEND FIRE-RATING INTO DECK FLUTES; DEFLECTION TRACK; (Plan View) A=4 7/8" B=7 1/4"; ACOUSTICAL SEALANT; UNDERSIDE OF STRUCTURE; FIRESTOP TYPE SEALANT; MTL STUD A - 3 5/8" B - 6"; SCHEDULED BASE (TYP)

NON-BEARING PARTITIONS

TYPE	RATING	FIRE/STC	DESCRIPTION	CONSTRUCTION
P3	(NONE)	(FIRE) (NONE)	ONE LAYER 5/8" TYPE "X" WATER RESISTANT GYPSUM BOARD EACH SIDE OF DOUBLE ROW OF 3 5/8" METAL STUDS 16" OC WITH 3 1/2" ACOUSTICAL INSULATION FRICTION FIT IN STUD SPACE, MAX BRACED WITH 1 5/8" METAL STUDS	1 5/8" 25 GA MTL STUD BRACING @ 1/3 POINTS; CEILING LINE; (Plan View) 6 3/4"; ACOUSTICAL SEALANT (TYP); UNDERSIDE OF STRUCTURE; DEFLECTION TRACK; 3 5/8"MTL STUD; MTL STUD BRACING; SCHEDULED BASE (TYP)

NON-BEARING PARTITIONS

TYPE	RATING	FIRE/STC	DESCRIPTION	CONSTRUCTION
P4		(FIRE) (NONE)	ONE LAYER 5/8" TYPE "X" WATER RESISTANT GYPSUM BOARD ON METAL STUDS 16" OC WITH 3 1/2" ACOUSTICAL INSULATION FRICTION FIT IN STUD SPACE	DEFLECTION TRACK; CEILING LINE; (Plan View) A=3 1/8" B=4 1/4" C=6 5/8"; SCHEDULED BASE; UNDERSIDE OF STRUCTURE; MTL STUD A - 2 1/2" B - 3 5/8" C - 6"; FLOOR; ACOUSTICAL SEALANT

DESIGNER/ENGINEER DLL
CAD OPERATOR JJ, TK, CK
CHADCHECKER RDB

Revisions	Date
ISSUED FOR BID	02/28/2012
PRE-BID AMENDMENT	05/10/2012

DesignLevel
455 Arden Road Columbus, OH 43214 p. 614.267.6603
www.DesignLeveLarchitecture.com
planning interior design architecture

© Copyright 2012

STATE OF OHIO ROBERT D. BARGA 07459 REGISTERED ARCHITECT
Professional Seal

Revised By: ---

Drawing Title: LIFE SAFETY PLAN — SCALE: 1/8"=1'-0"
Project Title: OPEN MRI SITE PREP
Date: 02-28-2012
Project No. 552-CSI-101
Approved: Project Manager: RANDI FIORINA
Building Number: 335
Checked: DESIGNLEVEL
Drawn:
Approved: Service Chief: GARY ABREU
Location: 4100 WEST THIRD STREET DAYTON, OH 45428
Drawing No. LS-01

VAMC, DAYTON — VA Department of Veterans Affairs

VA FORM 08-6231, OCT 1978

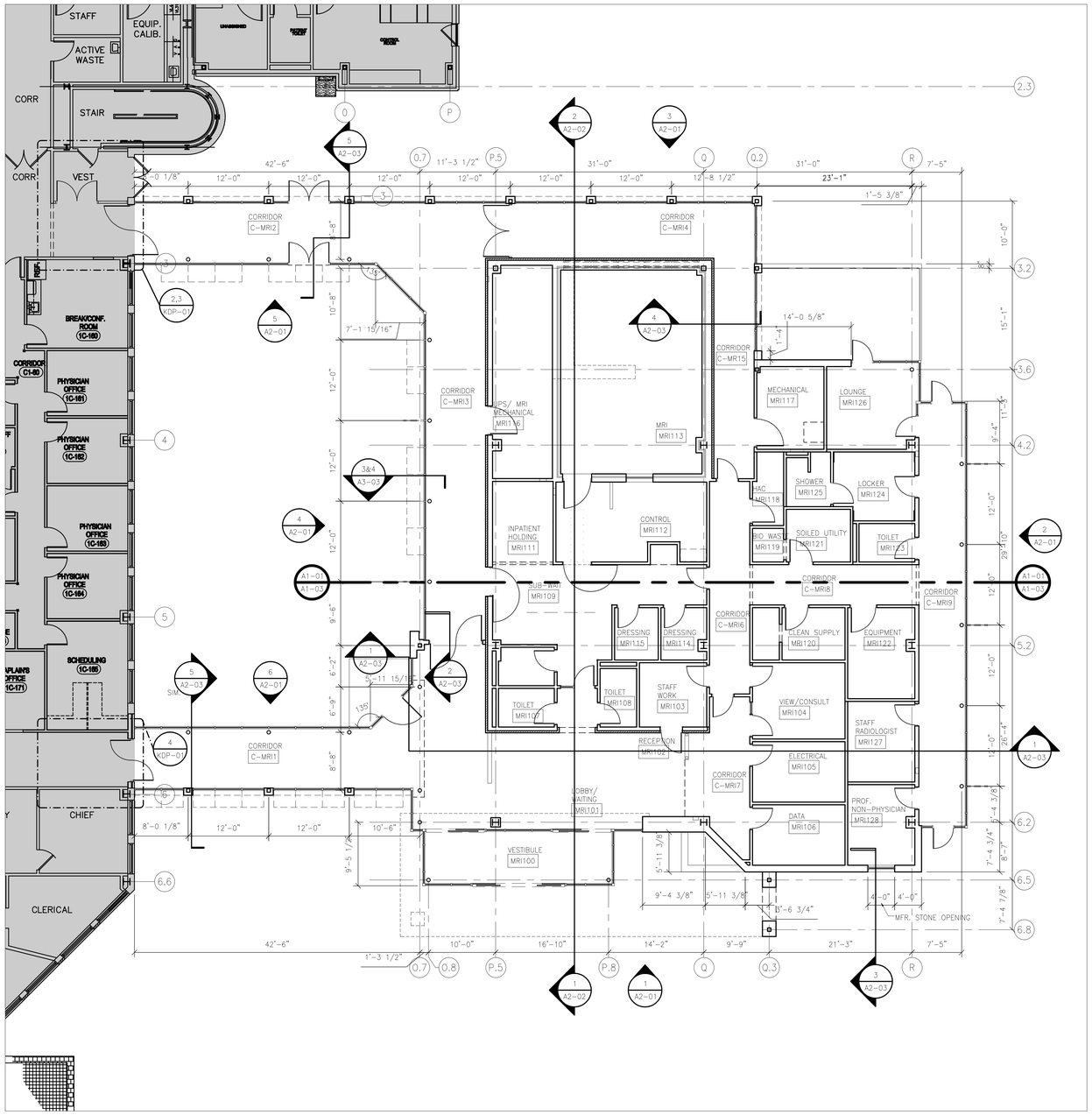

1 KEY DIMENSION PLAN

1/8"=1'-0"

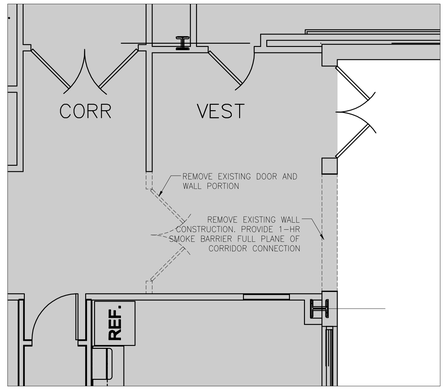

2 DEMOLITION PLAN

EXISTING VESTIBULE 1/4"=1'-0"

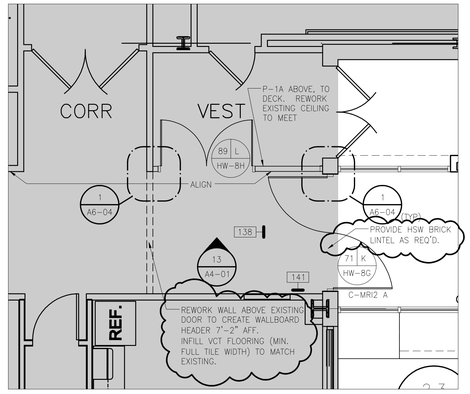

3 NEW PLAN

EXISTING VESTIBULE 1/4"=1'-0"

NOTE:
PATCH ALL FINISHES TO MATCH EXISTING AS REQ'D.

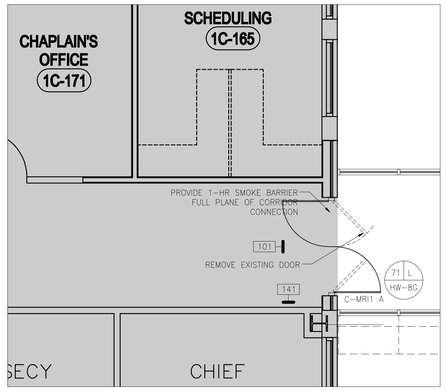

4 DEMOLITION/NEW PLAN

SOUTH CONNECTING CORRIDOR 1/4"=1'-0"

NOTE:
FINISH FLOOR 100'-0" ON ARCHITECTURAL DRAWINGS EQUALS FFE=973.13 ON C- SERIES DRAWINGS= 330 BUILDING EXISTING BUILDING FFE.

DESIGNER/ENGINEER DLL
CAD OPERATOR JG,TK,CK
QA/QC/CHECKER RDB

Revisions	Date
ISSUED FOR BID	02/28/2012
PRE-BID AMENDMENT	05/10/2012

DesignLevel
455 Arden Road Columbus, OH 43214 p. 614.267.6603
www.DesignLevelArchitecture.com
planning interior design architecture

© Copyright 2012

STATE OF OHIO ROBERT D. BARGA 07459 REGISTERED ARCHITECT
Professional Seal

Revised By:

Drawing Title: KEY DIMENSION PLAN, DEMOLITION PLAN, NEW PLAN
SCALE: 1/8"=1'-0"

Approved: Project Manager: RANDI FIORINA
Approved: Service Chief: GARY ABREU

Project Title: OPEN MRI SITE PREP

Building Number: 335
Checked: DESIGNLEVEL
Drawn:
Location: 4100 WEST THIRD STREET DAYTON, OH 45428

Date: 02-28-2012
Project No. 552-CSI-101
Drawing No. KDP-01

VAMC, DAYTON
VA Department of Veterans Affairs

VA FORM 08-6231, OCT 1978

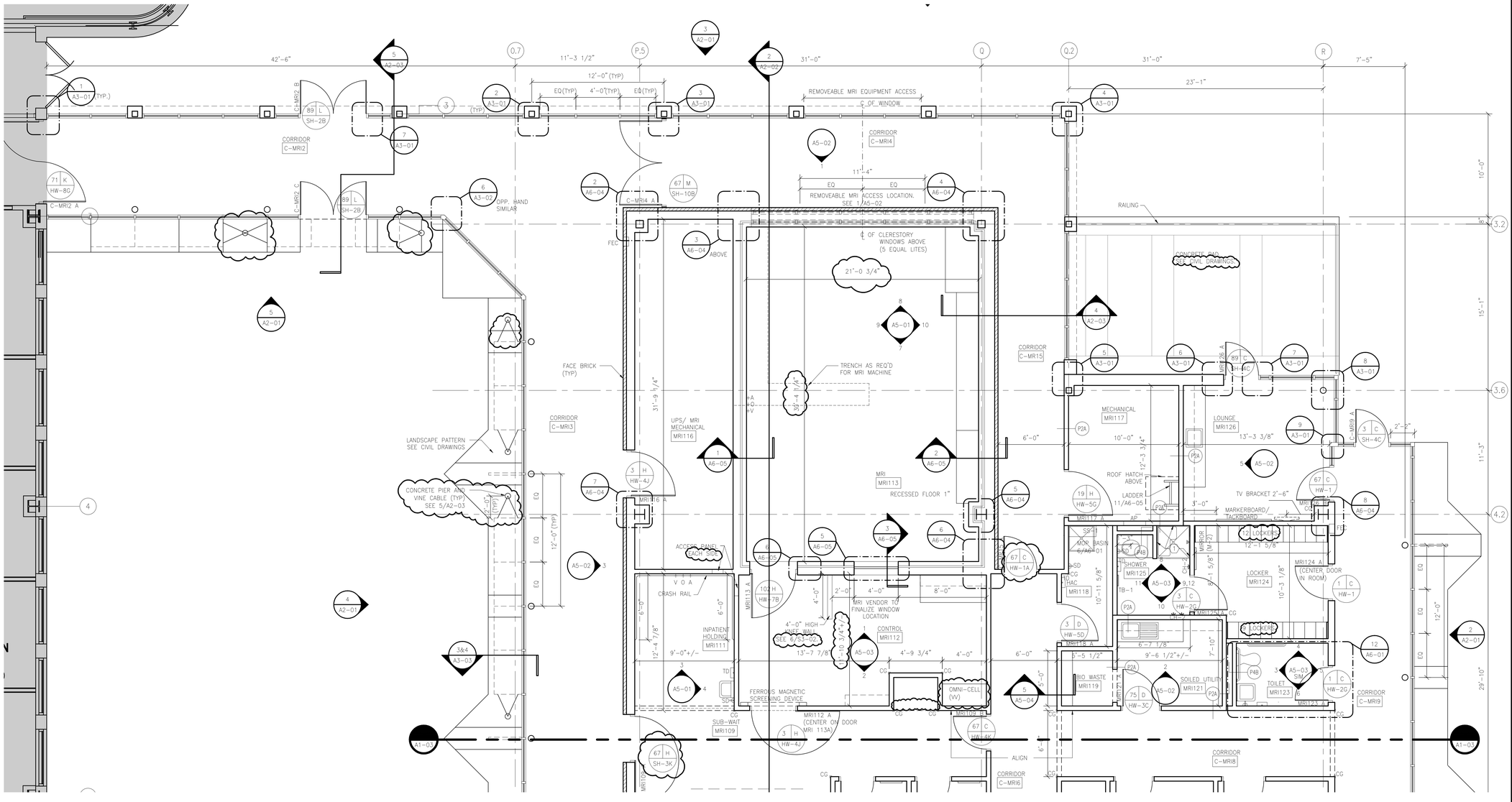

1 PARTIAL FLOOR PLAN
NORTH HALF 1/4"=1'-0"

DOOR SCHEDULE

1. PLAN INDICATION

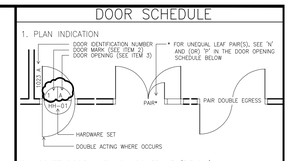

2. LOCATE DOOR MARK ON SCHEDULE (BELOW)
READ UP FOR MATERIAL
READ ACROSS FOR TYPE, GLASS LABEL, ETC.

3. DOOR OPENING SCHEDULE

A.	2'-8 x 7'-0	B.	2'-10 x 7'-0	C.	3'-0 x 7'-0
D.	3'-4 x 7'-0	E.	3'-6 x 7'-0	F.	3'-8 x 7'-0
G.	3'-10 x 7'-0	H.	4'-0 x 7'-0	J.	5'-0 x 7'-0
K.	7'-4 x 7'-0	L.	6'-0 x 7'-0	M.	7'-8 x 7'-0
N.	4'-0 x 7'-0 / 2'-0 x 7'-0			P.	9'-0" PACKAGE WIDTH

4. ALL DOORS 1 3/4 " THICK U.N.O.
5. DOOR FRAME NOTES:
   A. TYPICAL HM FRAME TO BE DOUBLE RABBITED WITH 2" FACE AND 1/2" RETURN EACH. SEE A4-01 FOR DETAILS.
6. FRG = FIRE RESISTANT GLAZING SYSTEM
7. DOOR MARK 'X'/'X' DENOTES UNEQUAL LEAVES. THE FIRST NUMBER IS THE ACTIVE LEAF.
8. LABELED, LEAD LINED DOORS WITH GLASS SHALL BE GLAZED WITH FRG AND LEADED GLASS.
9. SEE 2/KDP-01 FOR ADDITIONAL DOOR TAGS.

DOOR MARK SCHEDULE

DOOR MARK	FACING WOOD	FACING PLAM	FACING HM	FACING OTHER	TYPE	GLASS	LABEL	CONSTRUCTION OTHER THAN TYPICAL
	1	2	3	4	FL	–	–	
	5	6	7	8	FL	–	–	LEAD LINED
	9	10	11	12	FL	–	20 MIN.	
	13	14	15	16	FL	–	20 MIN.	LEAD LINED
	17	18	19	20	FL	–	45 MIN.	
	21	22	23	24	FL	–	60 MIN.	
	25	26	27	28	FL	–	90 MIN.	
	–	–	29	30	FL		3 HR.	
	31	32	33	34	FLWVP	SAFETY	–	
	35	36	37	38	FLWVP	FRG	20 MIN.	
	39	40	41	42	FLWVP	FRG	20 MIN.	LEAD LINED – SEE NOTE 8
	43	44	45	46	FLWVP	FRG	45 MIN.	
	47	48	49	50	FLWVP	FRG	60 MIN.	
	51	52	53	54	FLWVP	FRG	90 MIN.	
	55	56	57	58	FLWVP	SAFETY	–	
	59	60	61	62	FLWVP	FRG	20 MIN.	
	63	64	65	66	FLWVP	FRG	45 MIN.	
	67	68	69	70	FLHG	SAFETY	–	
	71	72	73	74	FLHG	FRG	20 MIN.	
	75	76	77	78	FLHG	FRG	45 MIN.	
	79	80	81	82	DU	–	–	
	83	84	85	86	DU	–	20 MIN.	
	–	–	87	88	DU	–	45 MIN.	
	–	–	–	89	ALGL	SAFETY	–	
	–	–	–	90	–	–	–	CASED OPENING
	91	92	93	94	FLFG	SAFETY	–	
	95	96	97	98	ALGL	SAFETY	–	AUTOMATIC ENTRANCE DOOR
	99	100	101	102				RFI DOOR
	103	104	105	106				
	107	108	109	110				
	111	112	113	114				

DOOR TYPES

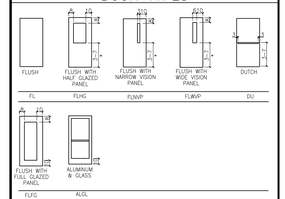

* DIMENSION IS FROM FINISH FLOOR TO BOTTOM OF VISION GLASS PANEL

ROOM DESIGNATION

PLAN INDICATION

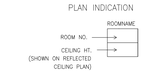

GENERAL NOTES

1. AT FACE BRICK 6" METAL STUD BACK UP WALL: PROVIDE 6" ACOUSTICAL INSULATION PER PARTITION TYPE P-1B TO METAL DECK BR'G OF 9'-9" AFF & PROVIDE R-19 EXTERIOR FRAMING INSULATION FROM 9'-9" TO TOP OF METAL STUD CONSTRUCTION.
2. SEE LIFE SAFETY PLANS FOR LOCATION OF RATED PARTITIONS AND FULL HEIGHT NON-RATED PARTITIONS. CONSTRUCTION SHALL BE PER TYPICAL NON-BEARING TYPE P-1A (U.N.O.) AND SHALL EXTEND AND BE ANCHORED TO FLOOR DECK ABOVE.
3. CG (CORNER GUARD)- SEE 7&8/A6-03.

EQUIPMENT SCHEDULE

THE FOLLOWING ABBREVIATIONS ARE USED ON THE DRAWINGS:
CC –CONTRACTOR FURNISHED / CONTRACTOR INSTALLED
VC –VA FURNISHED / CONTRACTOR INSTALLED
VV –VA FURNISHED / VA INSTALLED

(X) CODED NOTES

1. 5/8" CONCRETE BACKERBOARD @ SHOWER UNIT.

DESIGNER/ENGINEER DLL
CAD OPERATOR JC,TK,CK
QA/QC/CHECKER RDB

Revisions	Date
ISSUED FOR BID	02/28/2012
PRE-BID AMENDMENT	05/10/2012

DesignLevel
455 Arden Road Columbus, OH 43214 p. 614.267.6603
www.DesignLeveLarchitecture.com
planning interior design architecture

© Copyright 2012

STATE OF OHIO ROBERT D. BARGA 07459 REGISTERED ARCHITECT
Professional Seal

Revised By:
– – –

Drawing Title: PARTIAL FLOOR PLAN
SCALE: 1/4"=1'-0"

Project Title: OPEN MRI SITE PREP

Date: 02-28-2012
Project No. 552-CSI-101

Approved: Project Manager: RANDI FIORINA
Approved: Service Chief: GARY ABREU

Building Number: 335
Checked: DESIGNLEVEL
Drawn:

Location: 4100 WEST THIRD STREET DAYTON, OH 45428

Drawing No. A1-01

VAMC, DAYTON
VA Department of Veterans Affairs

VA FORM 08-6231, OCT 1978

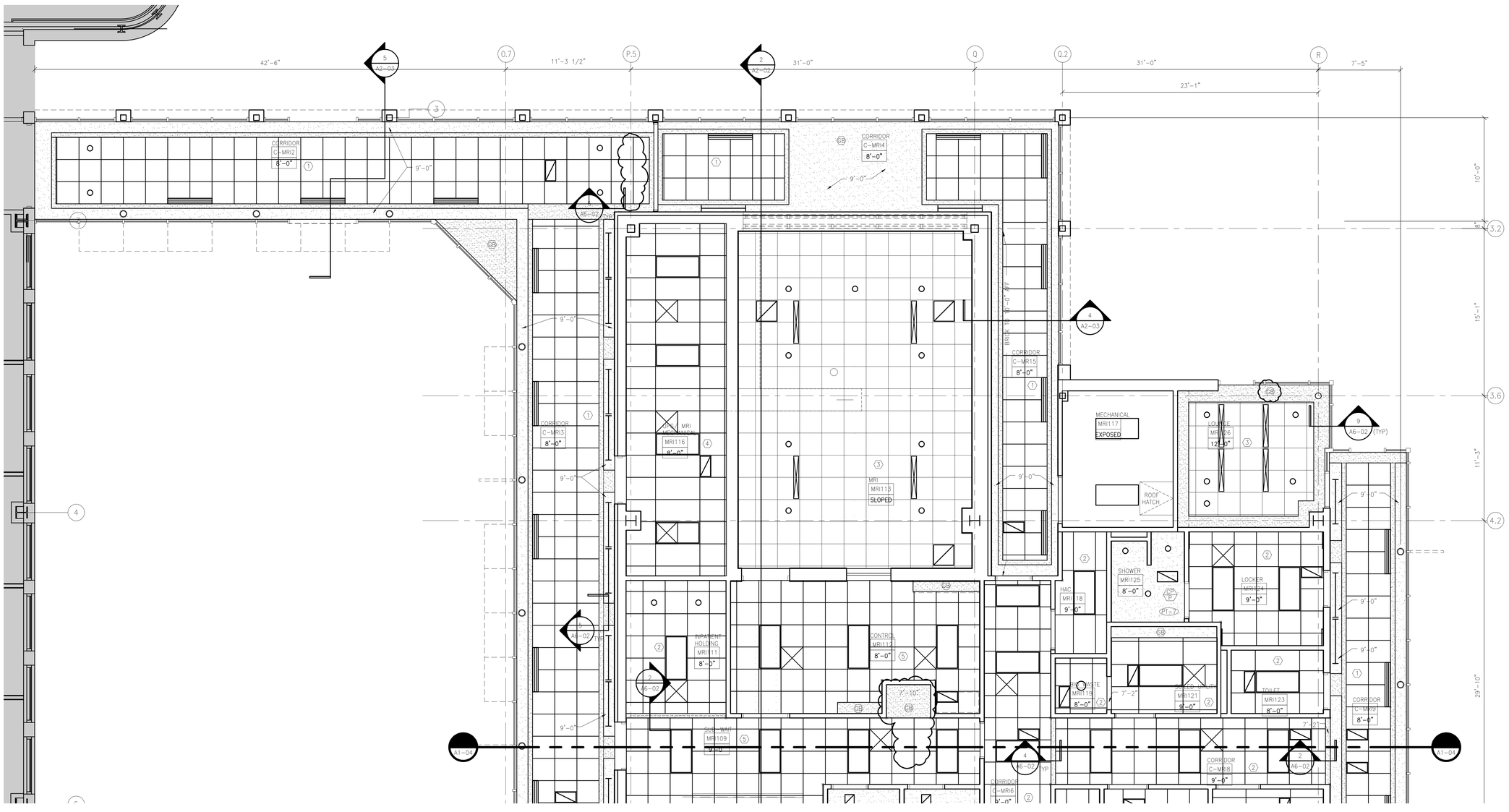

1 PARTIAL REFLECTED CEILING PLAN

NORTH HALF 1/4"=1'-0"

CEILING LEGEND

- RECESSED FLUORESCENT LIGHT FIXTURES
- SURFACE MOUNTED FLUORESCENT LIGHT FIXTURES
- AIR DIFFUSERS
- SLOT AIR DIFFUSERS
- RETURN AIR GRILLES
- ACCESS PANEL — SIZE AS NOTED
- SP SPEAKER
- REMOTE INDICATOR
- EXPOSED / CONCEALED SPRINKLER HEADS
- EXIT SIGN
- NURSE CALL DOME LIGHT
- TRACK (AS NOTED)

ACOUSTICAL CEILINGS

TYPE = ⬡ – SEE PROJECT MANUAL

START GRID HERE

FOR GRID TYPE & SIZE – SEE CEILING TYPE IN PROJECT MANUAL

MISC. CEILING FINISHES

- GB GYPSUM BOARD
- GP GYPSUM PLASTER
- EC EXPOSED CONSTRUCTION
- GP/P CEMENT PLASTER PAINTED
- EC/P EXPOSED CONSTRUCTION PAINTED
- CP CEMENT PLASTER

GENERAL REFLECTED CEILING PLAN NOTES

1. REFER TO THE PLUMBING, MECHANICAL, ELECTRICAL AND FIRE PROTECTION DRAWINGS FOR ADDITIONAL INFORMATION ON FIXTURES AND DEVICES SUSPENDED OR SURFAQE MOUNTED ON CEILINGS.
2. REFER TO THE PROJECT MANUAL FOR DETAILED PRODUCT INFORMATION.
3. ALL SPRINKLER HEADS SHALL BE SYMMETRICALLY LOCATED WITHIN A ROOM OR AREA. SPRINKLER HEADS IN CEILING TILES/PANELS SHALL BE CENTERED IN THE CEILING TILES/PANELS.
4. ALL FIXTURES AND DEVICES SHALL BE CENTERED IN CEILING TILES/ PANELS UNO.
5. THE MINIMUM CEILING TILE/PANEL IS TO BE 6" WIDE. WHERE THIS IS NOT POSSIBLE, CONTRACTOR TO CONSULT COTR FOR CLARIFICATION.
6. REFER TO E–SERIES DRAWINGS FOR LIGHTING SCHEDULES.
7. ALL ACOUSTICAL TILE/PANEL CEILINGS SHALL BE TYPE APC–1 UNO.
8. ALL 2X2 ACOUSTICAL TILE/PANEL CEILINGS SHALL USE CONCEALED GRID SUSPENSION SYSTEM, UNO.
9. LIGHTING FIXTURES ARE DIMENSIONED TO CENTERLINE OF FIXTURE UNO.
10. THE ARCHITECTURAL CEILING PLANS ARE TO BE USED FOR COORDINATION OF ALL CEILING ELEMENTS INCLUDING MECHANICAL, ELECTRICAL, PLUMBING, AND MISCELLANEOUS DEVICES. WHERE DISCREPANCIES OCCUR BETWEEN ARCHITECTURAL AND ENGINEERING DRAWINGS, CONSULT COTR FOR CLARIFICATIONS.
11. CENTER CEILING SYSTEM IN ROOM. CEILING TILE/PANEL PATTERN IS TO BE SYMMETRICAL WITHIN THE ROOM OR AREA UNO OR DIMENSIONED.
12. COORDINATE REQUIRED DIMENSIONS FOR ALL MEDICAL EQUIPMENT
13. ALL WALLBOARD AND CEMENT PLASTER CEILINGS SHALL BE PT–7, UNO.

ROOM DESIGNATION

ROOMNAME
ROOM NO. →
CEILING HT. →

EQUIPMENT SCHEDULE

THE FOLLOWING ABBREVIATIONS ARE USED ON THE DRAWINGS:

CC –CONTRACTOR FURNISHED / CONTRACTOR INSTALLED
VC –VA FURNISHED / CONTRACTOR INSTALLED
VV –VA FURNISHED / VA INSTALLED

DESIGNER/ENGINEER DLL
CAD OPERATOR JCJ,TK,CK
QA/QCHECKER RDB

Revisions	Date
ISSUED FOR BID	02/28/2012
PRE–BID AMENDMENT	05/10/2012

DesignLevel
455 Arden Road Columbus, OH 43214 p. 614.267.6603
www.DesignLeveLarchitecture.com
planning interior design architecture

© Copyright 2012

STATE OF OHIO ROBERT D. BARGA 07459 REGISTERED ARCHITECT
Professional Seal

Revised By: – – –

Drawing Title: REFLECTED CEILING PLAN PARTIAL FLOOR
SCALE: 1/4"=1'–0"

Approved: Project Manager: RANDI FIORINA

Approved: Service Chief: GARY ABREU

Project Title: OPEN MRI SITE PREP

Building Number: 335

Checked: DESIGNLEVEL

Drawn:

Location: 4100 WEST THIRD STREET DAYTON, OH 45428

Date: 02–28–2012

Project No. 552–CSI–101

Drawing No. A1-02

VAMC, DAYTON

VA Department of Veterans Affairs

VA FORM 08–6231, OCT 1978

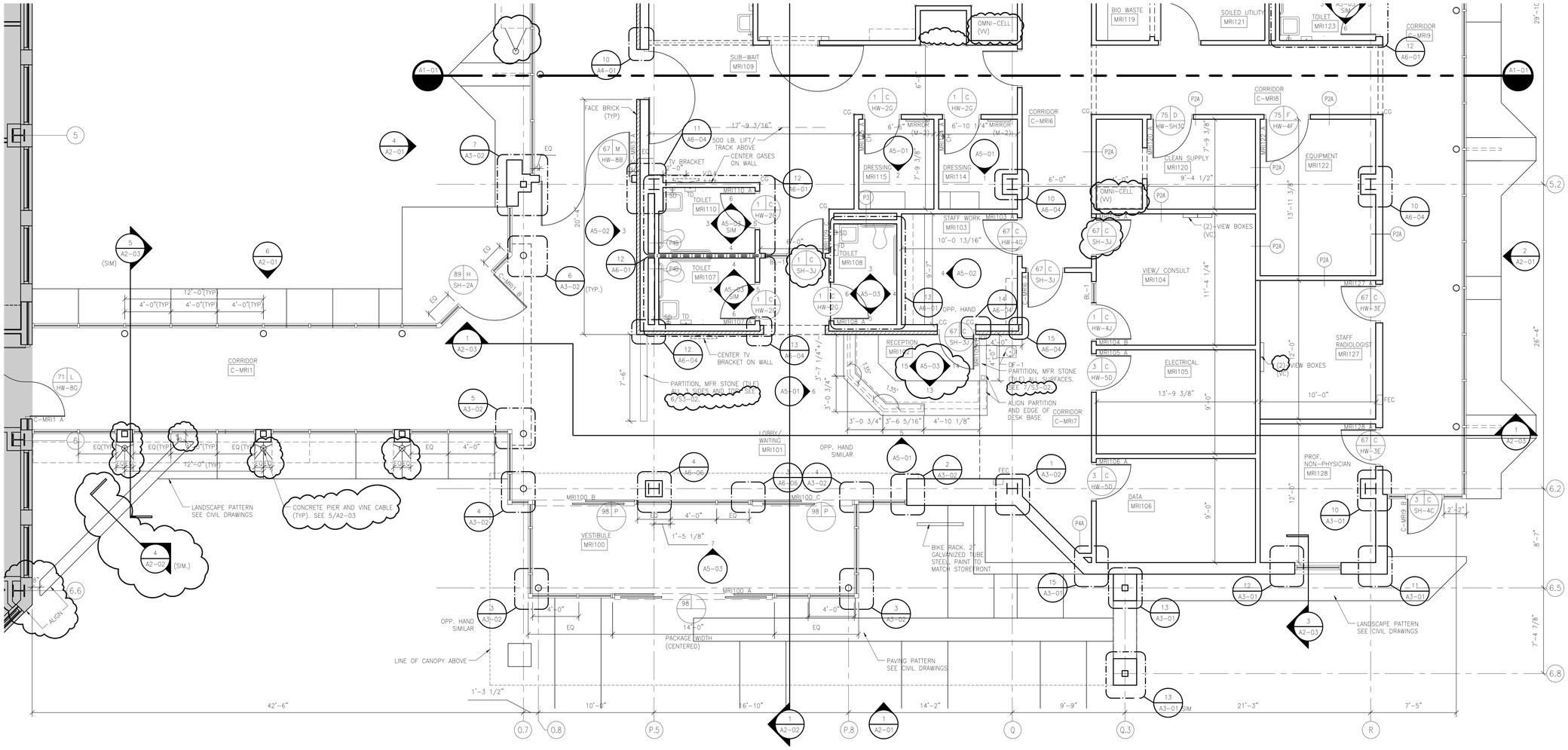

1 PARTIAL FLOOR PLAN
SOUTH HALF 1/4"=1'-0"

DOOR SCHEDULE

1. PLAN INDICATION

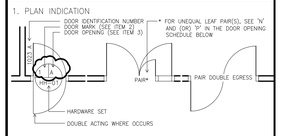

2. LOCATE DOOR MARK ON SCHEDULE (BELOW)
READ UP FOR MATERIAL
READ ACROSS FOR TYPE, GLASS LABEL, ETC.

3. DOOR OPENING SCHEDULE

A.	2–8 x 7–0	B.	2–10 x 7–0	C.	3–0 x 7–0
D.	3–4 x 7–0	E.	3–6 x 7–0	F.	3–8 x 7–0
G.	3–10 x 7–0	H.	4–0 x 7–0	J.	5–0 x 7–0
K.	7–4 x 7–0	L.	6–0 x 7–0	M.	7–8 x 7–0
N.	4–0 x 7–0 / 2–0 x 7–0			P.	9'–0" PACKAGE WIDTH

4. ALL DOORS 1 3/4 " THICK U.N.O.
5. DOOR FRAME NOTES:
   A. TYPICAL HM FRAME TO BE DOUBLE RABBITED WITH 2" FACE AND 1/2" RETURN EACH. SEE A4-01 FOR DETAILS.
6. FRG = FIRE RESISTANT GLAZING SYSTEM
7. DOOR MARK 'X'/'X' DENOTES UNEQUAL LEAVES. THE FIRST NUMBER IS THE ACTIVE LEAF.
8. LABELED, LEAD LINED DOORS WITH GLASS SHALL BE GLAZED WITH FRG AND LEADED GLASS.
9. SEE 2/KDP–01 FOR ADDITIONAL DOOR TAGS.

DOOR MARK SCHEDULE

DOOR MARK	FACING WOOD	FACING PLAST.	FACING HM	FACING OTHER	TYPE	GLASS	LABEL	CONSTRUCTION OTHER THAN TYPICAL
	1	2	3	4	FL	–	–	
	5	6	7	8	FL	–	–	LEAD LINED
	9	10	11	12	FL	–	20 MIN.	
	13	14	15	16	FL	–	20 MIN.	LEAD LINED
	17	18	19	20	FL	–	45 MIN.	
	21	22	23	24	FL	–	60 MIN.	
	25	26	27	28	FL	–	90 MIN.	
	–	–	29	30	FL		3 HR.	
	31	32	33	34	FLWVP	SAFETY	–	
	35	36	37	38	FLWVP	FRG	20 MIN.	
	39	40	41	42	FLWVP	FRG	20 MIN.	LEAD LINED – SEE NOTE 8
	43	44	45	46	FLWVP	FRG	45 MIN.	
	47	48	49	50	FLWVP	FRG	60 MIN.	
	51	52	53	54	FLWVP	FRG	90 MIN.	
	55	56	57	58	FLWVP	SAFETY	–	
	59	60	61	62	FLWVP	FRG	20 MIN.	
	63	64	65	66	FLWVP	FRG	45 MIN.	
	67	68	69	70	FLHG	SAFETY	–	
	71	72	73	74	FLHG	FRG	20 MIN.	
	75	76	77	78	FLHG	FRG	45 MIN.	
	79	80	81	82	DU	–	–	
	83	84	85	86	DU	–	20 MIN.	
	–	–	87	88	DU	–	45 MIN.	
	–	–	–	89	ALGL	SAFETY	–	
	–	–	–	90	–	–	–	CASED OPENING
	91	92	93	94	FLFG	SAFETY	–	
	95	96	97	98	ALGL	SAFETY	–	AUTOMATIC ENTRANCE DOOR
	99	100	101	102				RFI DOOR
	103	104	105	106				
	107	108	109	110				
	111	112	113	114				

DOOR TYPES

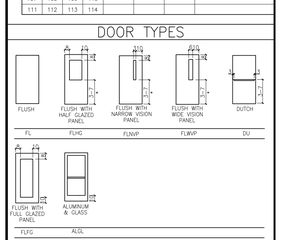

* DIMENSION IS FROM FINISH FLOOR TO BOTTOM OF VISION GLASS PANEL

ROOM DESIGNATION

PLAN INDICATION

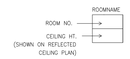

GENERAL NOTES

1. AT FACE BRICK 6" METAL STUD BACK UP WALL: PROVIDE 6" ACOUSTICAL INSULATION PER PARTITION TYPE P–1B TO METAL DECK BR'G OF 9'–9" AFF & PROVIDE R–19 EXTERIOR FRAMING INSULATION FROM 9'–9" TO TOP OF METAL STUD CONSTRUCTION.
2. SEE LIFE SAFETY PLANS FOR LOCATION OF RATED PARTITIONS AND FULL HEIGHT NON–RATED PARTITIONS. CONSTRUCTION SHALL BE PER TYPICAL NON–BEARING TYPE P–1A (U.N.O.) AND SHALL EXTEND AND BE ANCHORED TO FLOOR DECK ABOVE.
3. CG (CORNER GUARD)– SEE 7&8/A6–03.

EQUIPMENT SCHEDULE

THE FOLLOWING ABBREVIATIONS ARE USED ON THE DRAWINGS:
CC –CONTRACTOR FURNISHED / CONTRACTOR INSTALLED
VC –VA FURNISHED / CONTRACTOR INSTALLED
VV –VA FURNISHED / VA INSTALLED

DESIGNER/ENGINEER DLL
CAD OPERATOR JJ,TK,CK
QA/QC/CHECKER RDB

Revisions	Date
ISSUED FOR BID	02/28/2012
PRE–BID AMENDMENT	05/10/2012

DesignLevel
455 Arden Road Columbus, OH 43214 p. 614.267.6603
www.DesignLevelArchitecture.com
planning interior design architecture
© Copyright 2012

STATE OF OHIO ROBERT D. BARGA 07459 REGISTERED ARCHITECT
Professional Seal

Revised By:
– – –

Drawing Title: PARTIAL FLOOR PLAN
SCALE: 1/4"=1'–0"
Approved: Project Manager: RANDI FIORINA
Approved: Service Chief: GARY ABREU

Project Title: OPEN MRI SITE PREP
Building Number: 335
Checked: DESIGNLEVEL
Drawn:
Location: 4100 WEST THIRD STREET DAYTON, OH 45428

Date: 02–28–2012
Project No. 552–CSI–101
Drawing No. A1-03

VAMC, DAYTON
VA Department of Veterans Affairs

VA FORM 08–6231, OCT 1978

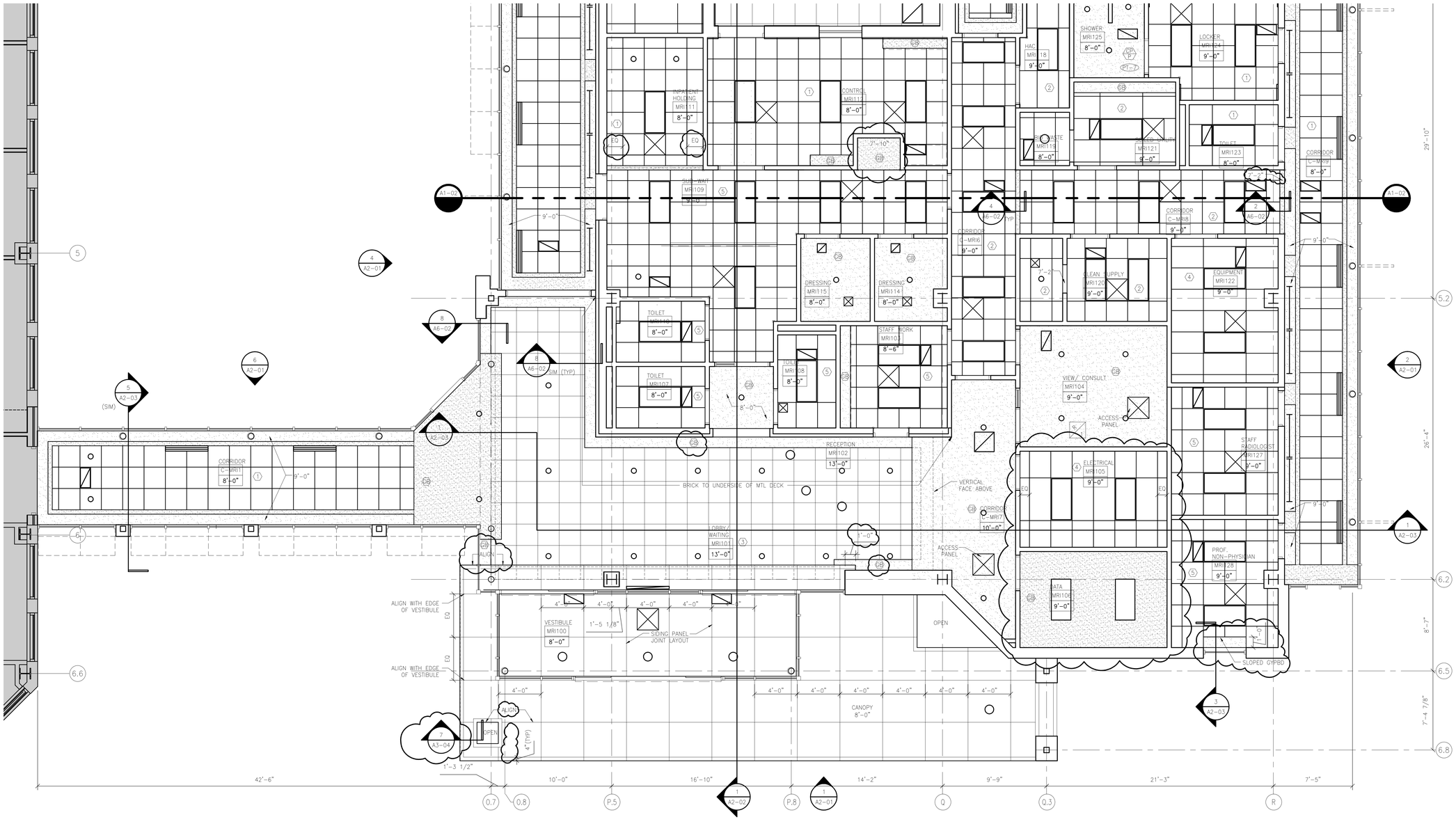

CEILING LEGEND

- RECESSED FLUORESCENT LIGHT FIXTURES
- SURFACE MOUNTED FLUORESCENT LIGHT FIXTURES
- AIR DIFFUSERS
- SLOT AIR DIFFUSERS
- RETURN AIR GRILLES
- ACCESS PANEL — SIZE AS NOTED
- SP SPEAKER
- REMOTE INDICATOR
- EXPOSED / CONCEALED SPRINKLER HEADS
- EXIT SIGN
- NURSE CALL DOME LIGHT
- TRACK (AS NOTED)

ACOUSTICAL CEILINGS

TYPE = – SEE PROJECT MANUAL

START GRID HERE

FOR GRID TYPE & SIZE – SEE CEILING TYPE IN PROJECT MANUAL

MISC. CEILING FINISHES

- GB GYPSUM BOARD
- GP GYPSUM PLASTER
- EC EXPOSED CONSTRUCTION
- CP/P CEMENT PLASTER PAINTED
- EC/P EXPOSED CONSTRUCTION PAINTED
- CP CEMENT PLASTER

GENERAL REFLECTED CEILING PLAN NOTES

1. REFER TO THE PLUMBING, MECHANICAL, ELECTRICAL AND FIRE PROTECTION DRAWINGS FOR ADDITIONAL INFORMATION ON FIXTURES AND DEVICES SUSPENDED OR SURFAQE MOUNTED ON CEILINGS.
2. REFER TO THE PROJECT MANUAL FOR DETAILED PRODUCT INFORMATION.
3. ALL SPRINKLER HEADS SHALL BE SYMMETRICALLY LOCATED WITHIN A ROOM OR AREA. SPRINKLER HEADS IN CEILING TILES/PANELS SHALL BE CENTERED IN THE CEILING TILES/PANELS.
4. ALL FIXTURES AND DEVICES SHALL BE CENTERED IN CEILING TILES/ PANELS UNO.
5. THE MINIMUM CEILING TILE/PANEL IS TO BE 6" WIDE. WHERE THIS IS NOT POSSIBLE, CONTRACTOR TO CONSULT COTR FOR CLARIFICATION.
6. REFER TO E-SERIES DRAWINGS FOR LIGHTING SCHEDULES.
7. ALL ACOUSTICAL TILE/PANEL CEILINGS SHALL BE TYPE APC-1 UNO.
8. ALL 2X2 ACOUSTICAL TILE/PANEL CEILINGS SHALL USE CONCEALED GRID SUSPENSION SYSTEM, UNO.
9. LIGHTING FIXTURES ARE DIMENSIONED TO CENTERLINE OF FIXTURE UNO.
10. THE ARCHITECTURAL CEILING PLANS ARE TO BE USED FOR COORDINATION OF ALL CEILING ELEMENTS INCLUDING MECHANICAL, ELECTRICAL, PLUMBING, AND MISCELLANEOUS DEVICES. WHERE DISCREPANCIES OCCUR BETWEEN ARCHITECTURAL AND ENGINEERING DRAWINGS, CONSULT COTR FOR CLARIFICATIONS.
11. CENTER CEILING SYSTEM IN ROOM. CEILING TILE/PANEL PATTERN IS TO BE SYMMETRICAL WITHIN THE ROOM OR AREA UNO OR DIMENSIONED.
12. COORDINATE REQUIRED DIMENSIONS FOR ALL MEDICAL EQUIPMENT.
13. ALL WALLBOARD AND CEMENT PLASTER CEILINGS SHALL BE PT-7, UNO.

ROOM DESIGNATION

ROOMNAME
ROOM NO.
CEILING HT.

EQUIPMENT SCHEDULE

THE FOLLOWING ABBREVIATIONS ARE USED ON THE DRAWINGS:

CC –CONTRACTOR FURNISHED / CONTRACTOR INSTALLED
VC –VA FURNISHED / CONTRACTOR INSTALLED
VV –VA FURNISHED / VA INSTALLED

1 PARTIAL REFLECTED CEILING PLAN
SOUTH HALF 1/4"=1'-0"

DESIGNER/ENGINEER DLL
CAD OPERATOR JG,TK,CK
QA/QC/CHECKER RDB

Revisions	Date
ISSUED FOR BID	02/28/2012
ADDENDUM 1	04/24/2012
PRE-BID AMENDMENT	05/10/2012

DesignLevel
455 Arden Road Columbus, OH 43214 p. 614.267.6603
www.DesignLeveLarchitecture.com
planning interior design architecture

© Copyright 2012

STATE OF OHIO ROBERT D. BARGA 07459 REGISTERED ARCHITECT
Professional Seal

Revised By:

Drawing Title: REFLECTED CEILING PLAN PARTIAL FLOOR
SCALE: 1/4"=1'-0"

Project Title: OPEN MRI SITE PREP

Date: 02-28-2012
Project No. 552-CSI-101

Approved: Project Manager: RANDI FIORINA
Approved: Service Chief: GARY ABREU

Building Number: 335
Checked: DESIGNLEVEL
Drawn:

Location: 4100 WEST THIRD STREET DAYTON, OH 45428

Drawing No. A1-04

VAMC, DAYTON
Department of Veterans Affairs

VA FORM 08-6231, OCT 1978

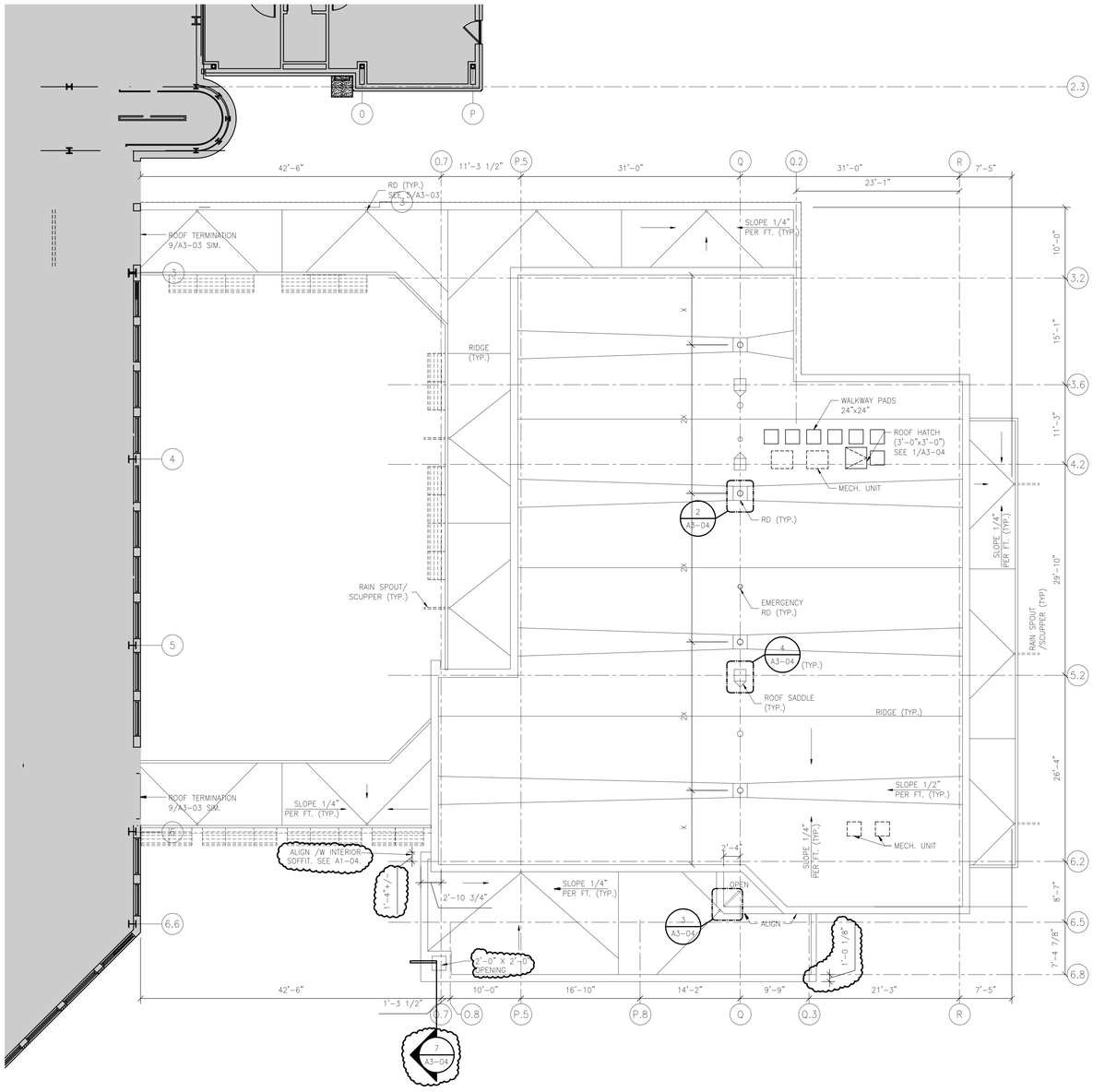

1 ROOF PLAN

1/8"=1'-0"

DESIGNER/ENGINEER DLL
CAD OPERATOR JD,TK,CK
QAQCCHECKER RDB

Revisions	Date
ISSUED FOR BID	02/28/2012
PRE-BID AMENDMENT	05/10/2012

DesignLevel
455 Arden Road Columbus, OH 43214 p. 614.267.6603
www.DesignLevelArchitecture.com
planning interior design architecture

© Copyright 2012

STATE OF OHIO ROBERT D. BARGA 07459 REGISTERED ARCHITECT

Professional Seal

Revised By:

Drawing Title: ROOF PLAN
SCALE: 1/8"=1'-0"

Project Title: OPEN MRI SITE PREP

Date: 02-28-2012

Project No. 552-CSI-101

Approved: Project Manager: RANDI FIORINA

Building Number: 335

Checked: DESIGNLEVEL

Drawn:

Approved: Service Chief: GARY ABREU

Location: 4100 WEST THIRD STREET DAYTON, OH 45428

Drawing No. A1-05

VAMC, DAYTON

VA Department of Veterans Affairs

VA FORM 08-6231, OCT 1978

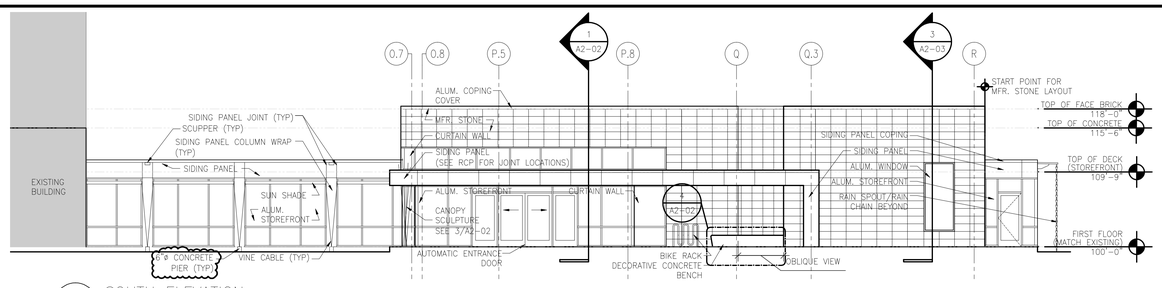

1 SOUTH ELEVATION

1/8"=1'-0"

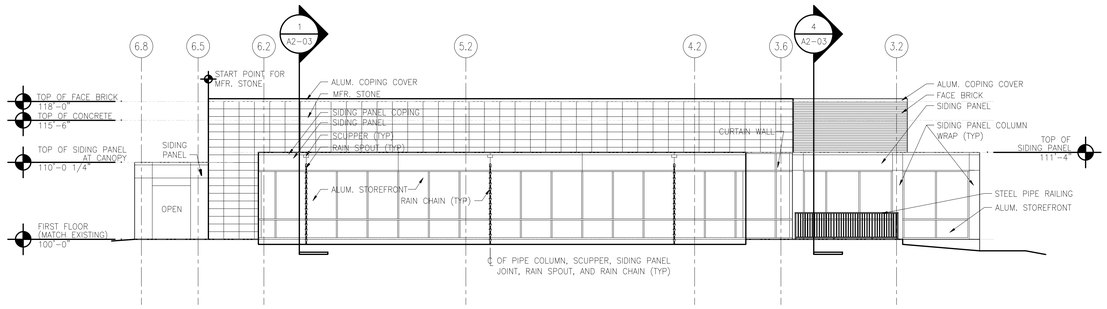

2 EAST ELEVATION

1/8"=1'-0"

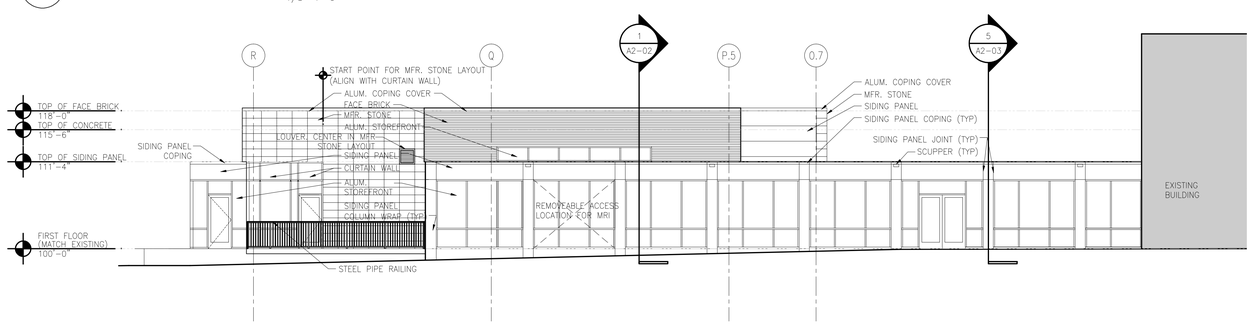

3 NORTH ELEVATION

1/8"=1'-0"

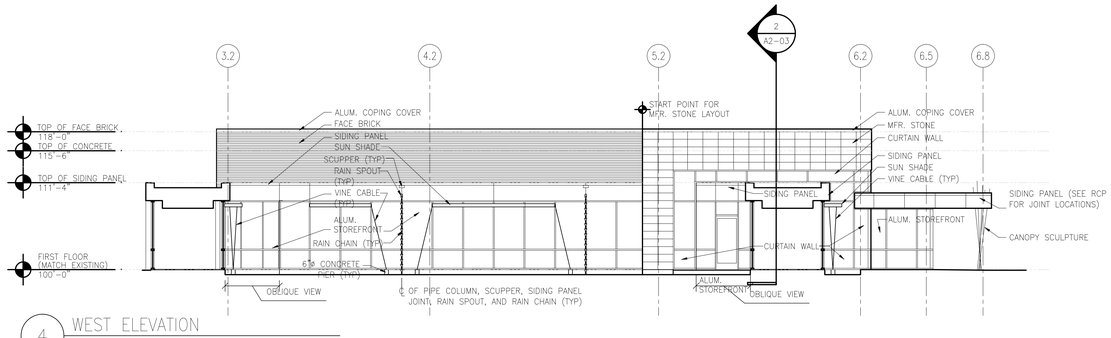

4 WEST ELEVATION

1/8"=1'-0"

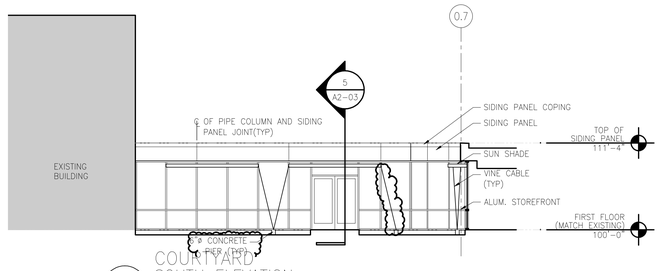

5 COURTYARD SOUTH ELEVATION

1/8"=1'-0"

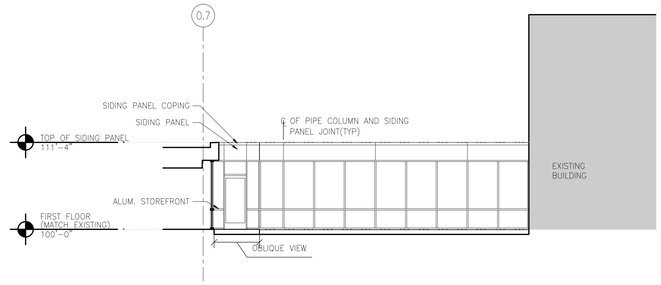

6 COURTYARD NORTH ELEVATION

1/8"=1'-0"

DESIGNER/ENGINEER DLL
CAD OPERATOR JG,TK,CK
QA/QC CHECKER RDB

Revisions	Date
ISSUED FOR BID	02/28/2012
PRE-BID AMENDMENT	05/10/2012

DesignLevel
455 Arden Road Columbus, OH 43214 p. 614.267.6603
www.DesignLeveLarchitecture.com
planning interior design architecture

© Copyright 2012

STATE OF OHIO ROBERT D. BARGA 07459 REGISTERED ARCHITECT

Professional Seal

Revised By:

Drawing Title: EXTERIOR ELEVATIONS
SCALE: 1/8"=1'-0"

Project Title: OPEN MRI SITE PREP

Date: 02-28-2012

Project No. 552-CSI-101

Approved: Project Manager: RANDI FIORINA

Building Number: 335

Checked: DESIGNLEVEL

Drawn

Approved: Service Chief: GARY ABREU

Location: 4100 WEST THIRD STREET DAYTON, OH 45428

Drawing No. A2-01

VAMC, DAYTON

VA Department of Veterans Affairs

VA FORM 08-6231, OCT 1978

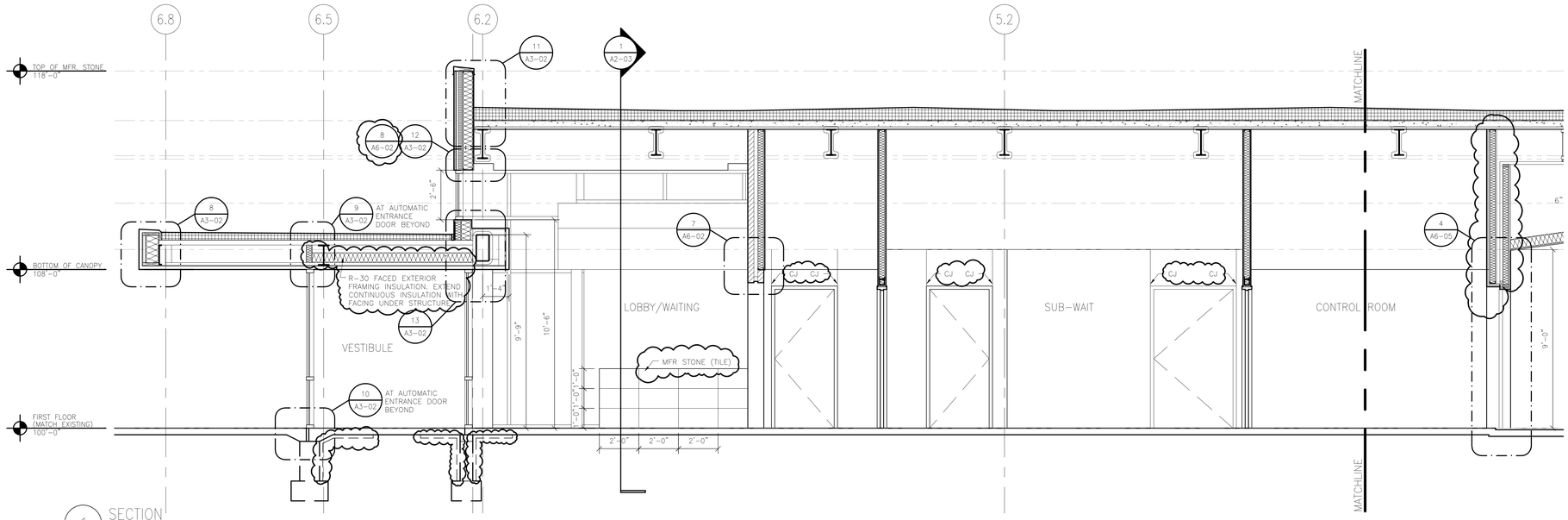

1 SECTION
NORTH/SOUTH 3/8"=1'-0"

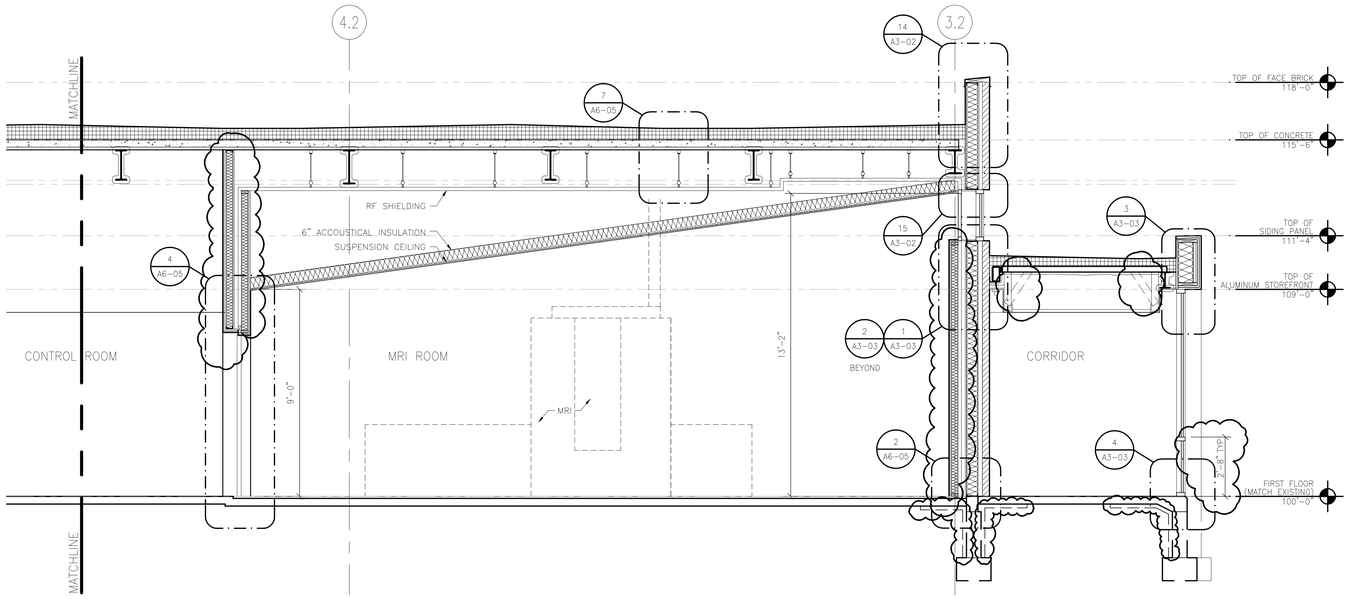

2 SECTION
NORTH/SOUTH 3/8"=1'-0"

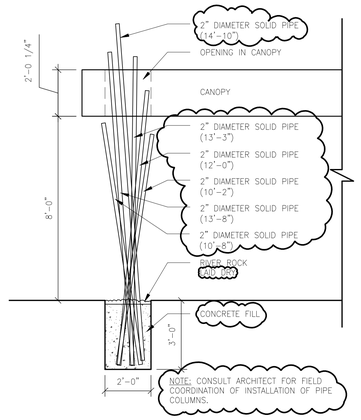

3 CANOPY SCULPTURE
3/8"=1'-0"

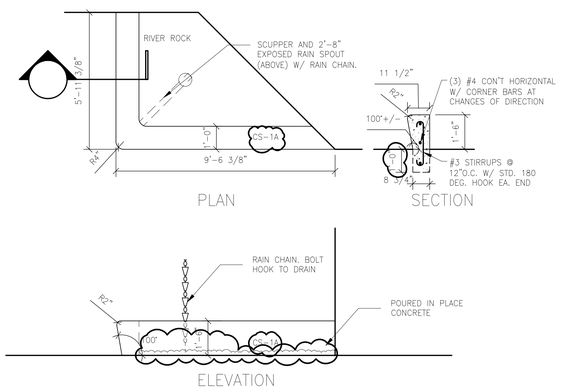

4 EXTERIOR BENCH
3/8"=1'-0"

DESIGNER/ENGINEER DLL
CAD OPERATOR JCL,TK,CK
QA/QC/CHECKER RDB

Revisions	Date
ISSUED FOR BID	02/28/2012
PRE-BID AMENDMENT	05/10/2012

DesignLevel
455 Arden Road Columbus, OH 43214 p. 614.267.6603
www.DesignLevelArchitecture.com
planning interior design architecture

© Copyright 2012

STATE OF OHIO ROBERT D. BARGA 07459 REGISTERED ARCHITECT
Professional Seal

Revised By:

Drawing Title: BUILDING SECTIONS & WALL SECTIONS
SCALE: AS NOTED

Project Title: OPEN MRI SITE PREP

Date: 02-28-2012
Project No. 552-CSI-101

Approved: Project Manager: RANDI FIORINA
Approved: Service Chief: GARY ABREU

Building Number: 335
Checked: DESIGNLEVEL
Drawn:

Location: 4100 WEST THIRD STREET DAYTON, OH 45428

Drawing No. A2-02

VAMC, DAYTON
VA Department of Veterans Affairs

VA FORM 08-6231, OCT 1978

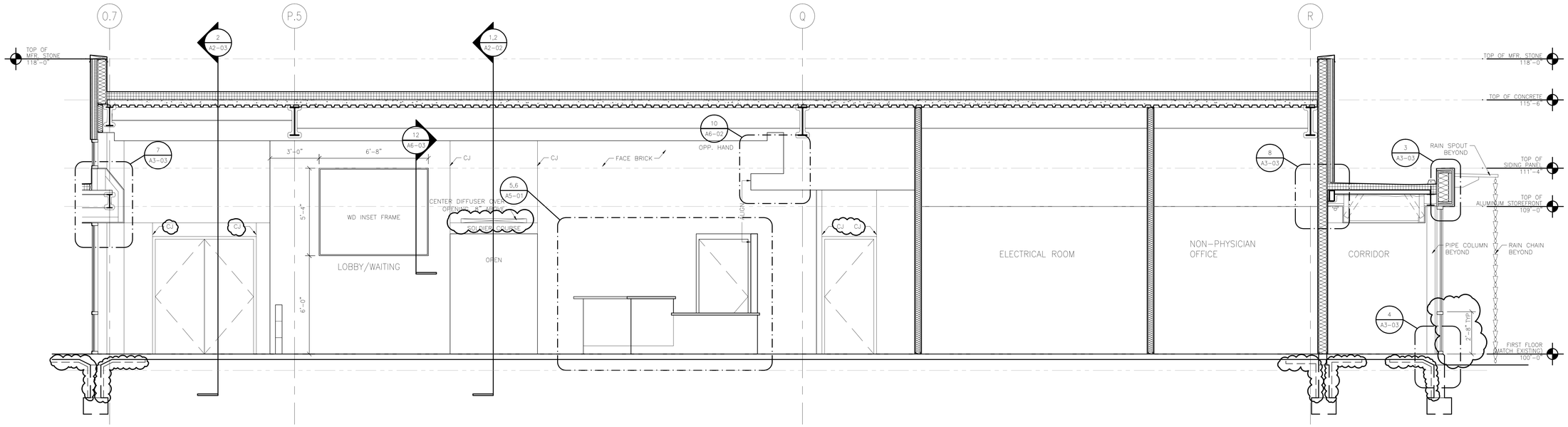

1 SECTION
EAST/WEST 3/8"=1'-0"

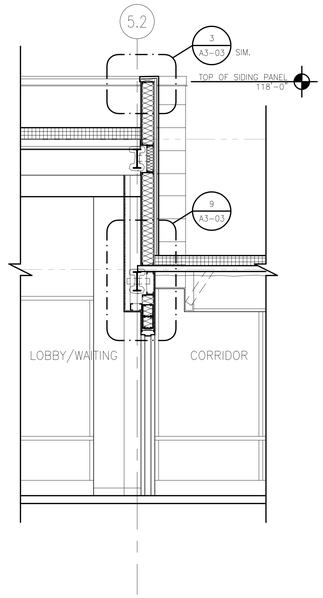

2 SECTION
NORTH WALL- LOBBY/CORRIDOR 3/8"=1'-0"

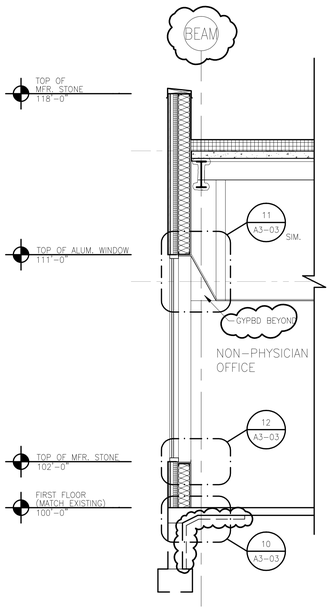

3 SECTION
SOUTH WALL- STONE PANEL 3/8"=1'-0"

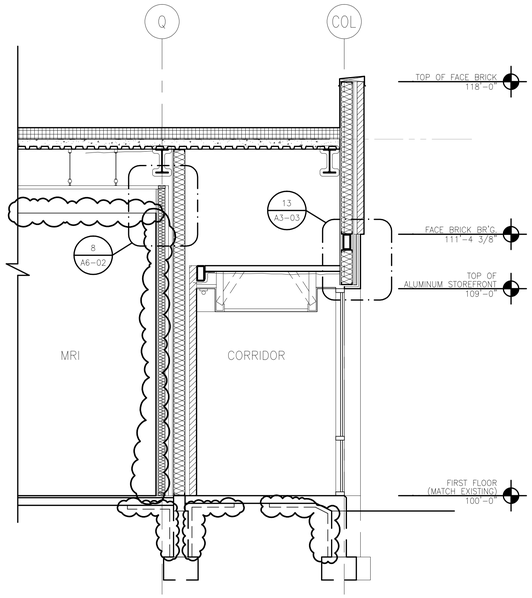

4 SECTION
THROUGH CORRIDOR C-MR15 3/8"=1'-0"

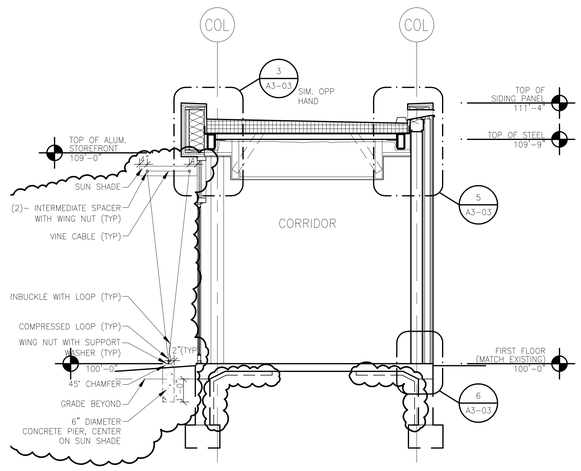

5 SECTION
THROUGH CORRIDOR C-MR12 3/8"=1'-0"

DESIGNER/ENGINEER DLL
CAD OPERATOR JG,TK,CK
QAQC/CHECKER RDB

Revisions	Date
ISSUED FOR BID	02/28/2012
PRE-BID AMENDMENT	05/10/2012

DesignLevel
455 Arden Road Columbus, OH 43214 p. 614.267.6603
www.DesignLeveLarchitecture.com
planning interior design architecture

© Copyright 2012

STATE OF OHIO ROBERT D. BARGA 07459 REGISTERED ARCHITECT
Professional Seal

Revised By:

Drawing Title: BUILDING SECTIONS & WALL SECTIONS
SCALE: AS NOTED

Project Title: OPEN MRI SITE PREP

Date: 02-28-2012
Project No.: 552-CSI-101

Approved: Project Manager: RANDI FIORINA
Building Number: 335
Checked: DESIGNLEVEL
Drawn:
Drawing No.: A2-03

Approved: Service Chief: GARY ABREU
Location: 4100 WEST THIRD STREET DAYTON, OH 45428

VAMC, DAYTON
VA Department of Veterans Affairs

VA FORM 08-6231, OCT 1978

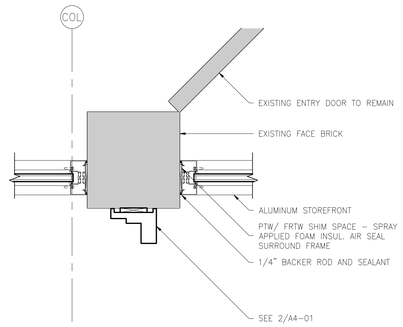

1 PLAN DETAIL
TYP. CONNECTION TO EXISTING BUILDING 1 1/2"=1'-0"

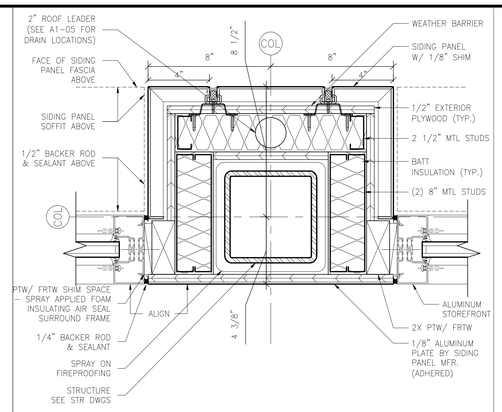

2 PLAN DETAIL
TYP. ENCLOSED COLUMN DETAIL 3"=1'-0"

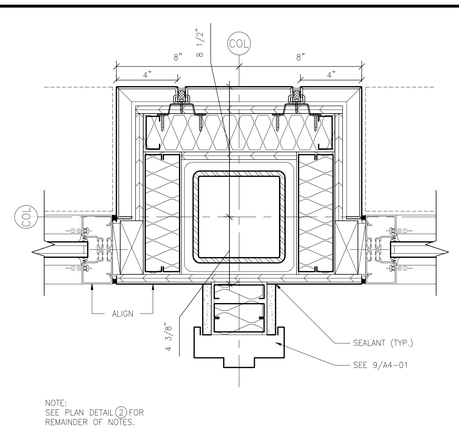

3 PLAN DETAIL
ENCLOSED COLUMN – WALL CONDITION 3"=1'-0"

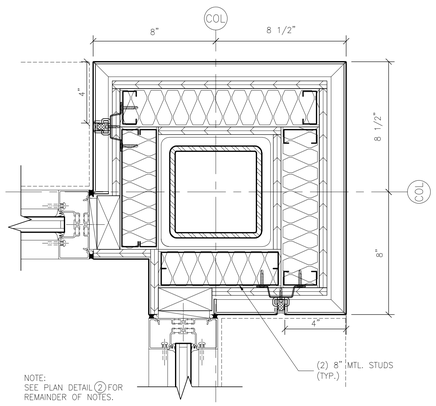

4 PLAN DETAIL
ENCLOSED COLUMN DETAIL 3"=1'-0"

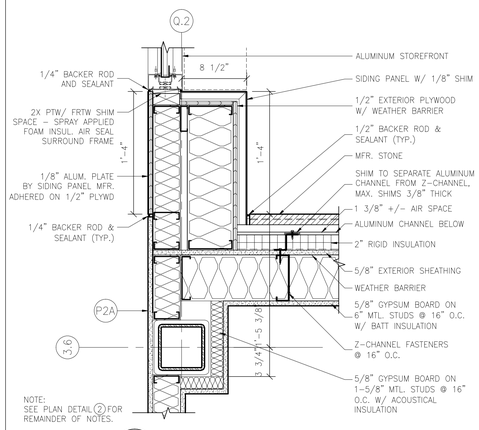

5 PLAN DETAIL
STOREFRONT MFR. STONE PANEL CONNECTION 1/2"=1'-0"

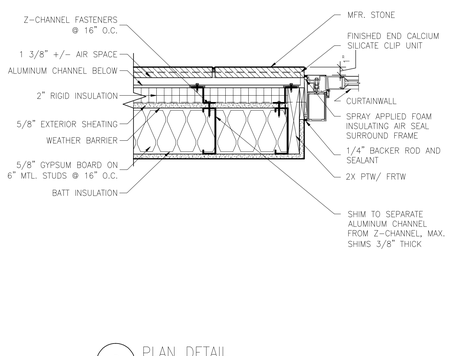

6 PLAN DETAIL
MFR. STONE PANEL AT DOOR JAMB 1 1/2"=1'-0"

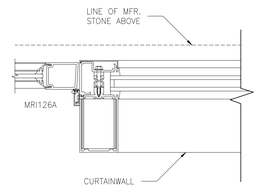

7 PLAN DETAIL
CURTAINWALL JAMB 3"=1'-0"

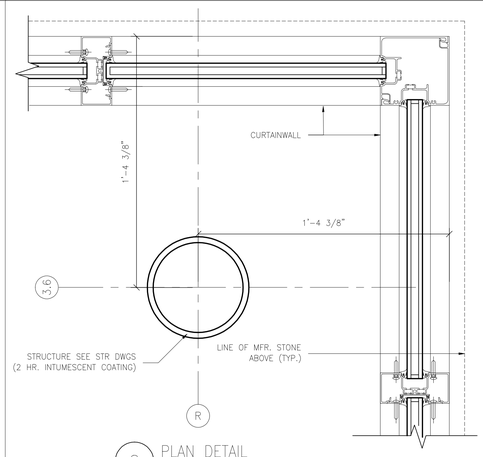

8 PLAN DETAIL
CURTAINWALL CORNER CONDITION 3"=1'-0"

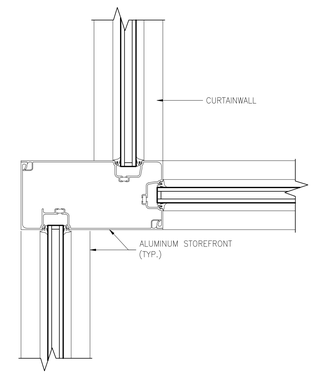

9 PLAN DETAIL
ALUMINUM CURTAINWALL/ STOREFRONT DETAIL 3"=1'-0"

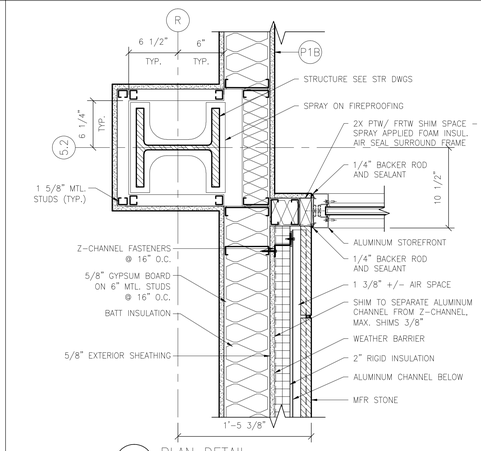

10 PLAN DETAIL
AT R AND 5.2 1 1/2"=1'-0"

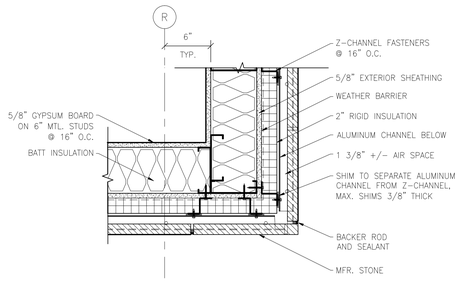

11 PLAN DETAIL
MFR. STONE PANEL CORNER 1 1/2"=1'-0"

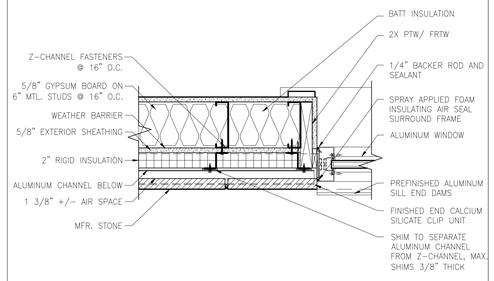

12 PLAN DETAIL
MFR. STONE PANEL WINDOW JAMB 1 1/2"=1'-0"

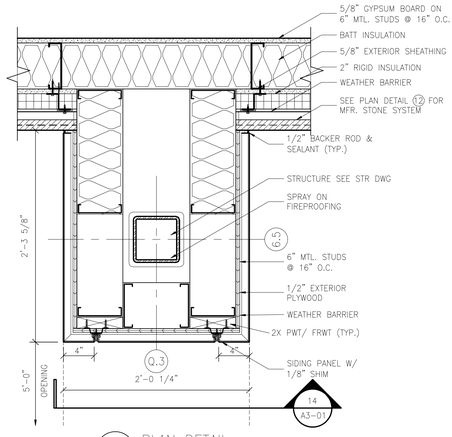

13 PLAN DETAIL
CANOPY DETAIL 1 1/2"=1'-0"

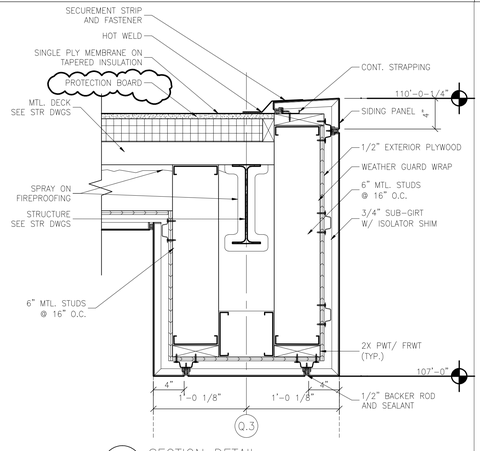

14 SECTION DETAIL
CANOPY DETAIL 1 1/2"=1'-0"

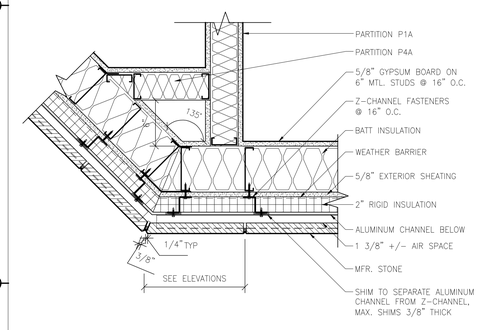

15 PLAN DETAIL
MFR. STONE PANEL CORNER 1 1/2"=1'-0"

DESIGNER/ENGINEER DLL
CAD OPERATOR JG,TK,CK
QAQC/CHECKER RDB

Revisions	Date
ISSUED FOR BID	02/28/2012
PRE-BID AMENDMENT	05/10/2012

DesignLevel
455 Arden Road Columbus, OH 43214 p. 614.267.6603
www.DesignLeveLarchitecture.com
planning interior design architecture

© Copyright 2012

STATE OF OHIO ROBERT D. BARGA 07459 REGISTERED ARCHITECT
Professional Seal

Revised By:

Drawing Title: EXTERIOR DETAILS
SCALE: AS NOTED

Project Title: OPEN MRI SITE PREP

Date: 02-28-2012
Project No. 552-CSI-101

Approved: Project Manager: RANDI FIORINA
Building Number: 335
Checked: DESIGNLEVEL
Drawn:

Approved: Service Chief: GARY ABREU
Location: 4100 WEST THIRD STREET DAYTON, OH 45428

Drawing No. A3-01

VAMC, DAYTON
VA Department of Veterans Affairs

VA FORM 08-6231, OCT 1978

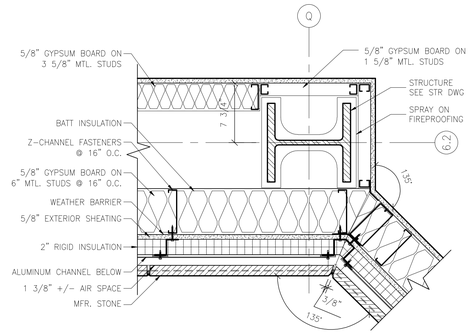

1 PLAN DETAIL
AT Q AND 6.2 — 1 1/2"=1'-0"

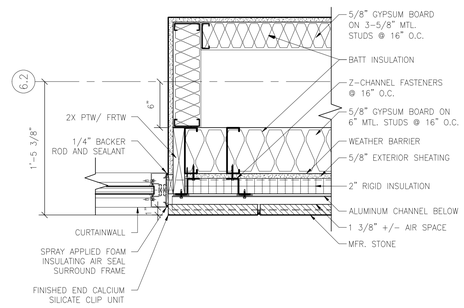

2 PLAN DETAIL
CURAIN WALL MFR. STONE PANEL CONNECTION 1/2"=1'-0"

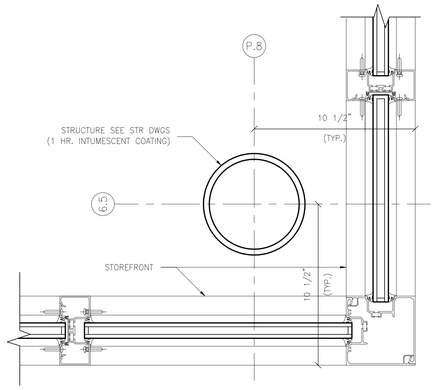

3 PLAN DETAIL
STOREFRONT CORNER CONDITION — 3"=1'-0"

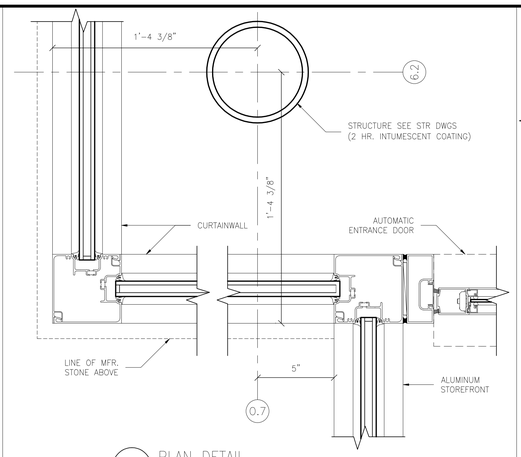

4 PLAN DETAIL
AT 0.7 AND 6.2 — 3"=1'-0"

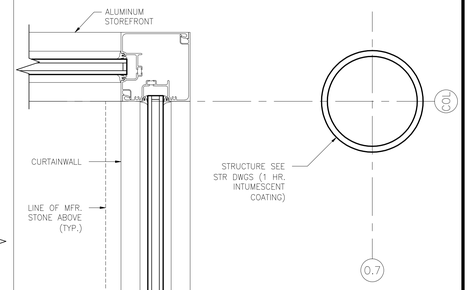

5 PLAN DETAIL
STOREFRONT OUTSIDE CORNER CONDITION — 3"=1'-0"

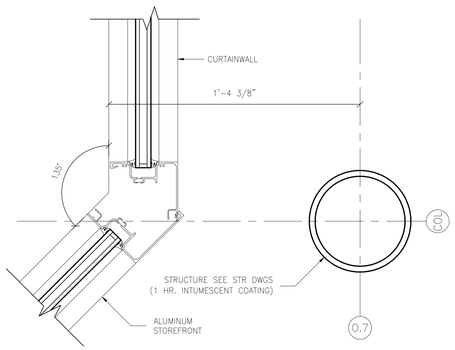

6 PLAN DETAIL
STOREFRONT DETAIL- 135 DEGREE ANGLE — 3"=1'-0"

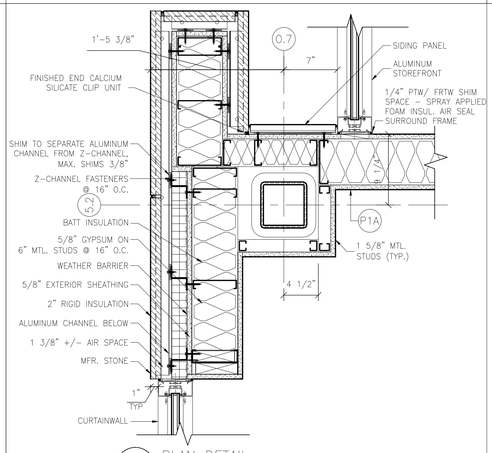

7 PLAN DETAIL
AT 0.7 AND 5.2 — 1 1/2"=1'-0"

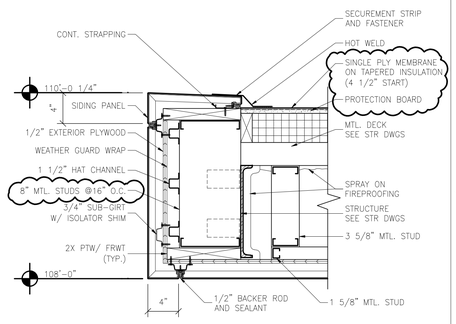

8 SECTION DETAIL
CANOPY FASCIA — 1 1/2"=1'-0"

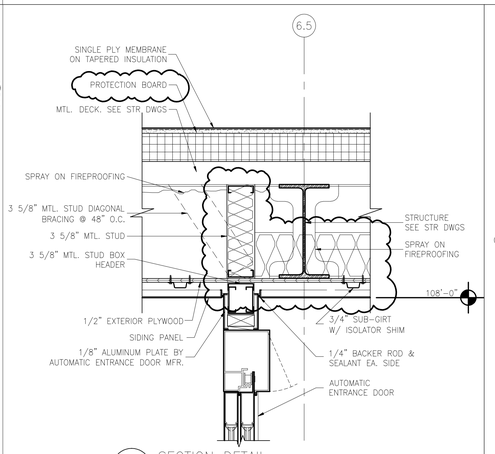

9 SECTION DETAIL
AT VESTIBULE — 1 1/2"=1'-0"

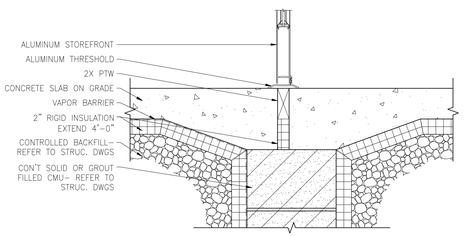

10 SECTION DETAIL
AT VESTIBULE — 1 1/2"=1'-0"

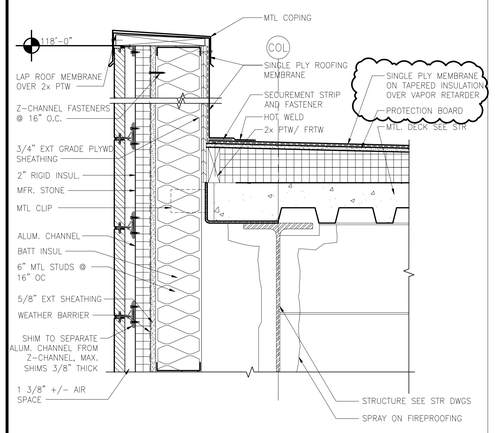

11 SECTION DETAIL
1 1/2"=1'-0"

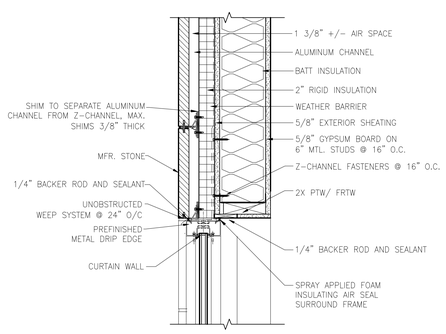

12 SECTION DETAIL
WINDOW HEAD AT STONE WALL — 1 1/2"=1'-0"

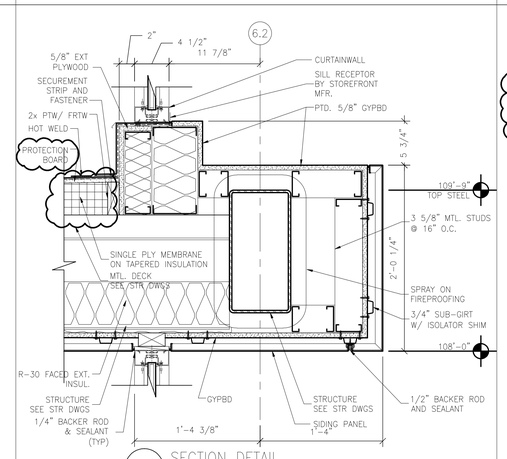

13 SECTION DETAIL
AT CANOPY — 1 1/2"=1'-0"

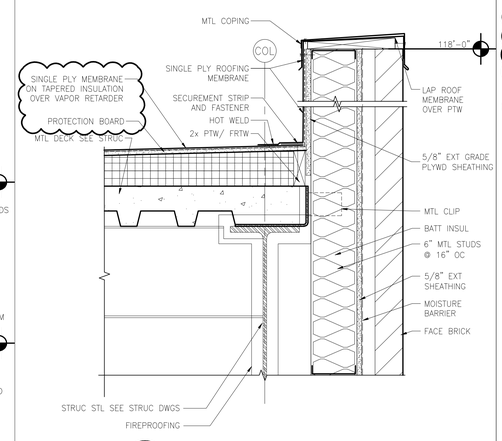

14 SECTION DETAIL
1 1/2"=1'-0"

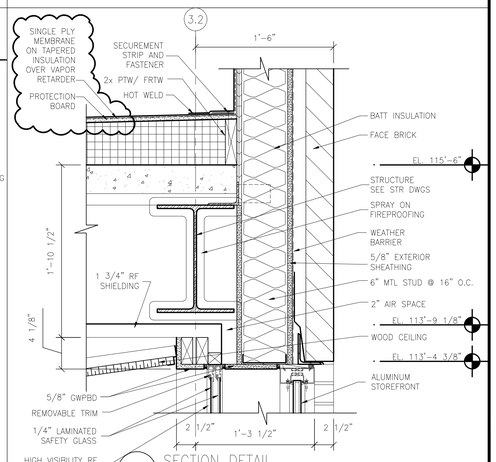

15 SECTION DETAIL
1 1/2"=1'-0"

DESIGNER/ENGINEER DLL
CAD OPERATOR JG,TK,CK
QA/QC/CHECKER RDB

Revisions	Date
ISSUED FOR BID	02/28/2012
PRE-BID AMENDMENT	05/10/2012

DesignLevel
455 Arden Road Columbus, OH 43214 p. 614.267.6603
www.DesignLeveLArchitecture.com
planning interior design architecture

© Copyright 2012

STATE OF OHIO ROBERT D. BARGA 07459 REGISTERED ARCHITECT
Professional Seal

Revised By:

Drawing Title: EXTERIOR DETAILS
SCALE: AS NOTED

Project Title: OPEN MRI SITE PREP

Date: 02-28-2012
Project No. 552-CSI-101

Approved: Project Manager: RANDI FIORINA
Building Number: 335
Checked: DESIGNLEVEL
Drawn:

Approved: Service Chief: GARY ABREU
Location: 4100 WEST THIRD STREET DAYTON, OH 45428

Drawing No. A3-02

VAMC, DAYTON
VA Department of Veterans Affairs

VA FORM 08-6231, OCT 1978

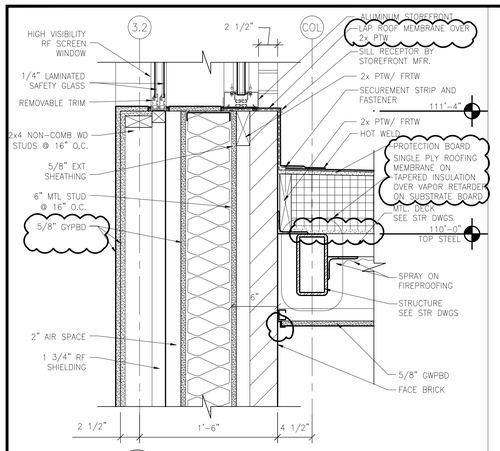

1 SECTION DETAIL
1 1/2"=1'-0"

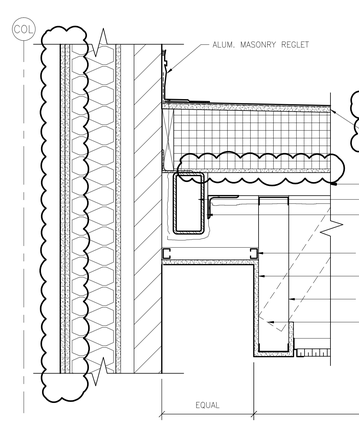

2 SECTION DETAIL
1 1/2"=1'-0"

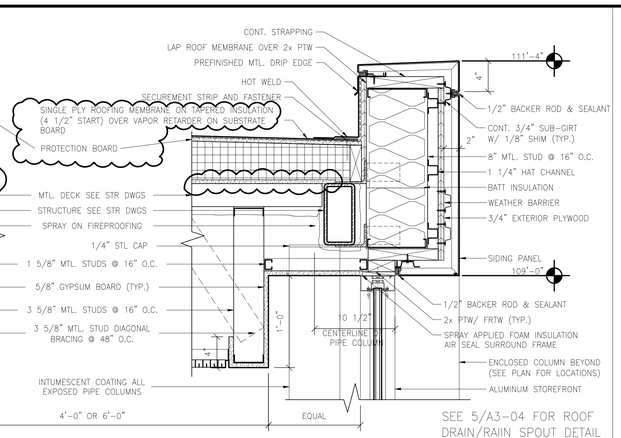

3 SECTION DETAIL
1 1/2"=1'-0"

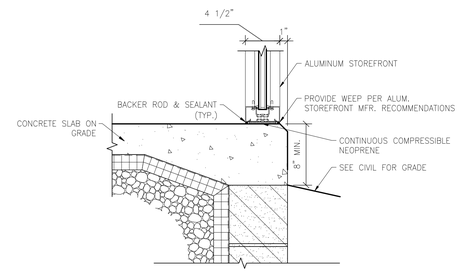

4 SECTION DETAIL
1 1/2"=1'-0"

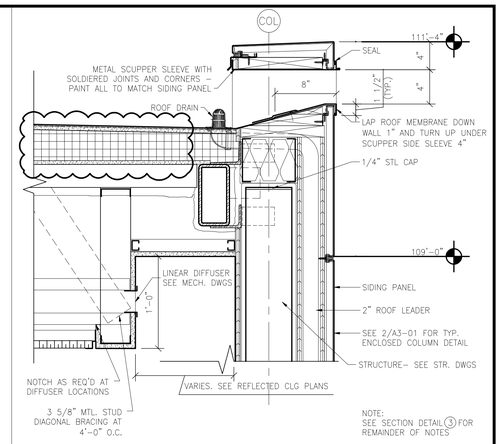

5 SECTION DETAIL–ROOF DRAIN
1 1/2"=1'-0"

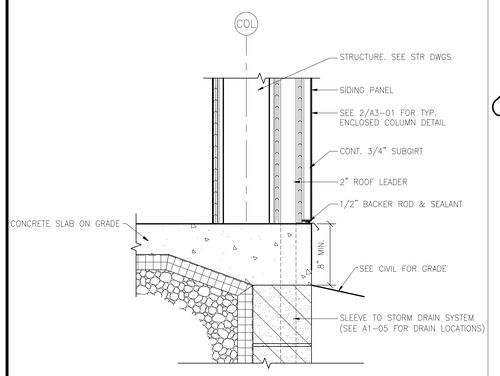

6 SECTION DETAIL–ROOF DRAIN
SILL
1 1/2"=1'-0"

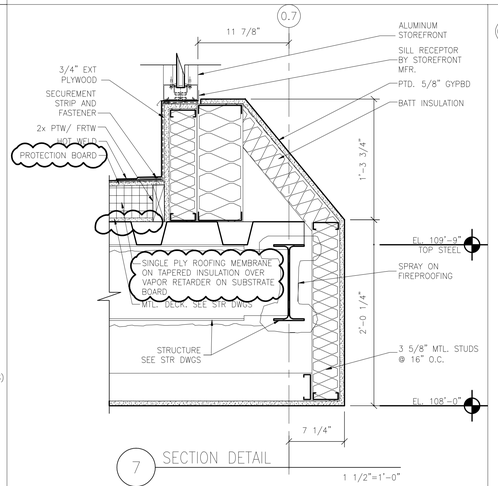

7 SECTION DETAIL
1 1/2"=1'-0"

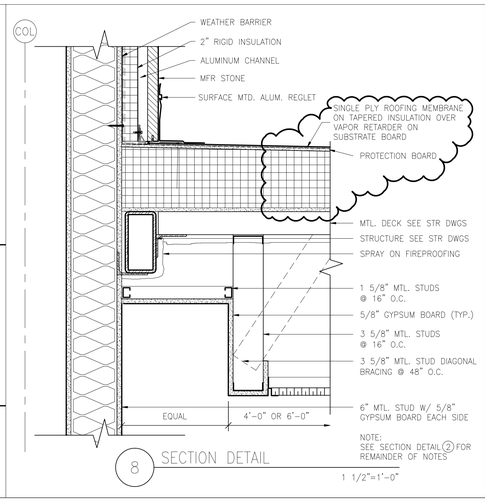

8 SECTION DETAIL
1 1/2"=1'-0"

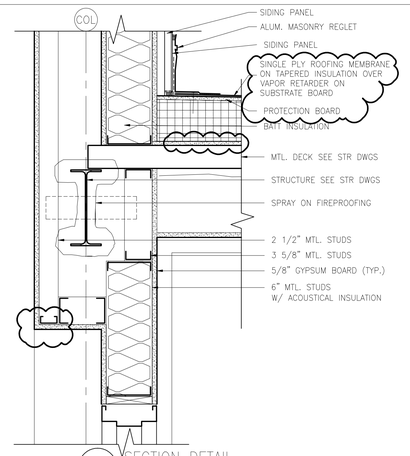

9 SECTION DETAIL
1 1/2"=1'-0"

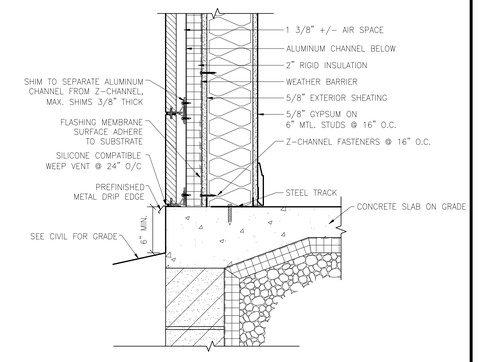

10 SECTION DETAIL
1 1/2"=1'-0"

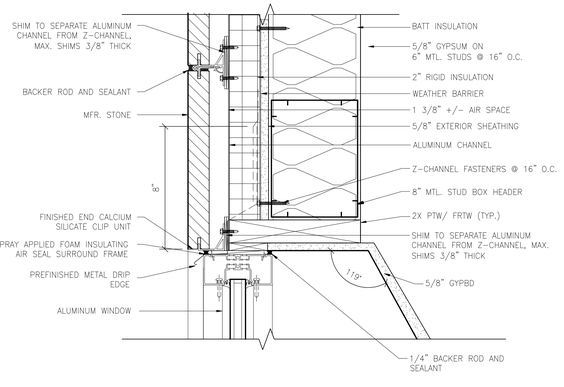

11 SECTION DETAIL
WINDOW HEAD IN MFR. STONE
3"=1'-0"

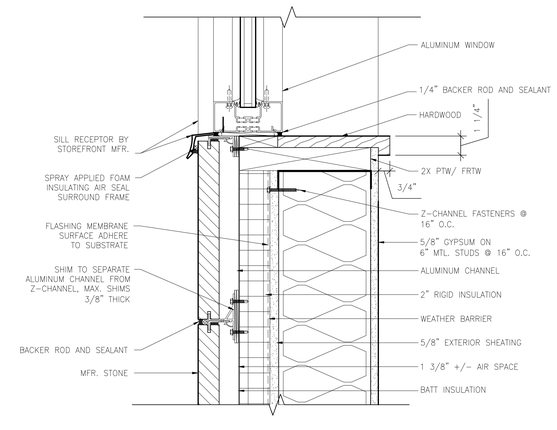

12 SECTION DETAIL
TYP WINDOW SILL IN MFR. STONE
3"=1'-0"

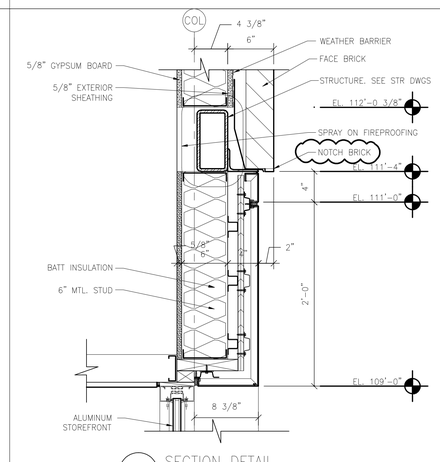

13 SECTION DETAIL
1 1/2"=1'-0"

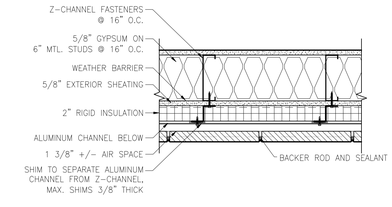

14 PLAN DETAIL
1 1/2"=1'-0"

DESIGNER/ENGINEER DLL
CAD OPERATOR JG,TK,CK
QAQC/CHECKER RDR

Revisions	Date
ISSUED FOR BID	02/28/2012
PRE-BID AMENDMENT	05/10/2012

DesignLevel
455 Arden Road Columbus, OH 43214 p. 614.267.6603
www.DesignLeveLArchitecture.com
planning interior design architecture

© Copyright 2012

STATE OF OHIO REGISTERED ARCHITECT ROBERT D. BARGA 07459
Professional Seal

Revised By:
– – –

Drawing Title: EXTERIOR DETAILS
SCALE: AS NOTED

Project Title: OPEN MRI SITE PREP

Date: 02-28-2012
Project No. 552-CSI-101

Approved: Project Manager: RANDI FIORINA
Approved: Service Chief: GARY ABREU

Building Number: 335
Checked: DESIGNLEVEL
Drawn:
Location: 4100 WEST THIRD STREET DAYTON, OH 45428

Drawing No. A3-03

VAMC, DAYTON
Department of Veterans Affairs

VA FORM 08-6231, OCT 1978

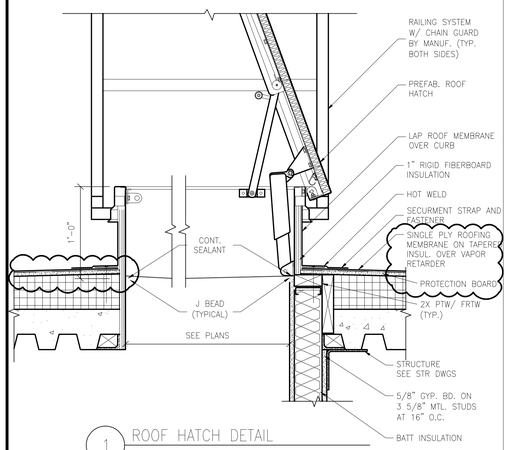

1 ROOF HATCH DETAIL
1 1/2"=1'-0"

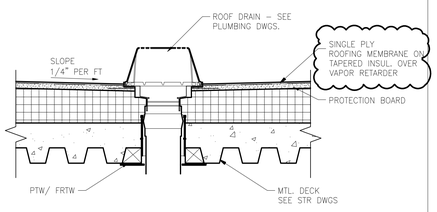

2 ROOF DRAIN DETAIL
1 1/2"=1'-0"

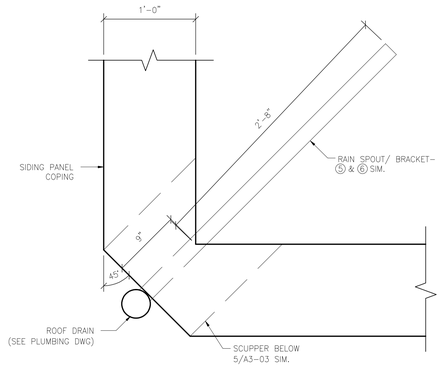

3 PLAN DETAIL
1 1/2"=1'-0"

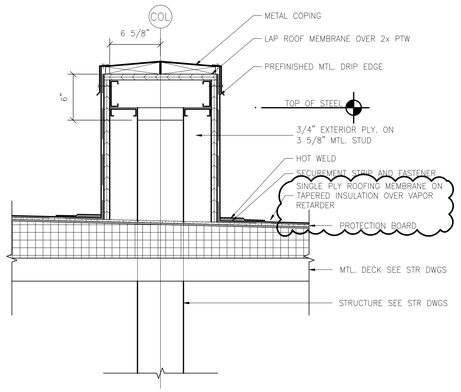

4 SECTION DETAIL
COLUMN STUB
1 1/2"=1'-0"

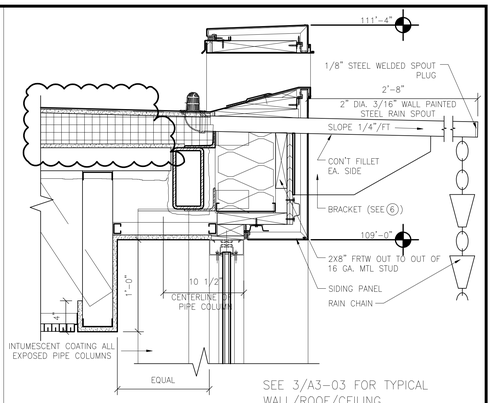

SEE 3/A3-03 FOR TYPICAL WALL/ROOF/CEILING CONSTRUCTION AND 5/A3-03 FOR TYPICAL SCUPPER CONSTRUCTION

5 RAIN SPOUT DETAIL
1 1/2"=1'-0"

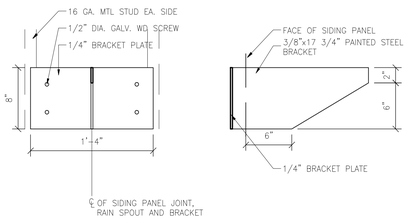

6 BRACKET DETAIL
1 1/2"=1'-0"

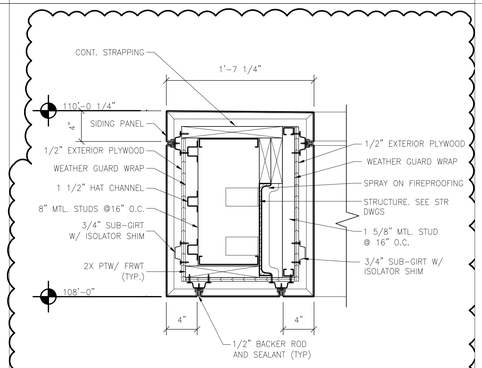

7 SECTION DETAIL
CANOPY OPENING
1 1/2"=1'-0"

DESIGNER/ENGINEER DLL
CAD OPERATOR JG,TK,CK
QA/QC/CHECKER RDB

Revisions	Date
ISSUED FOR BID	02/28/2012
PRE-BID AMENDMENT	05/10/2012

DesignLevel
455 Arden Road Columbus, OH 43214 p. 614.267.6603
www.DesignLeveLarchitecture.com
planning interior design architecture

© Copyright 2012

STATE OF OHIO ROBERT D. BARGA 07459 REGISTERED ARCHITECT
Professional Seal

Revised By: ---

Drawing Title: EXTERIOR DETAILS
SCALE: AS NOTED

Project Title: OPEN MRI SITE PREP

Date: 02-28-2012
Project No. 552-CSI-101

Approved: Project Manager: RANDI FIORINA
Approved: Service Chief: GARY ABREU

Building Number: 335
Checked: DESIGNLEVEL
Drawn:

Location: 4100 WEST THIRD STREET DAYTON, OH 45428

Drawing No. A3-04

VAMC, DAYTON
VA Department of Veterans Affairs

VA FORM 08-6231, OCT 1978

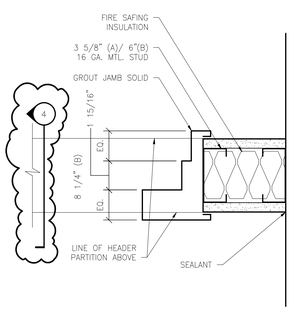

1 DOUBLE EGRESS DOOR JAMB TYPE P-1 OR P-2 PARTITION
3"=1'-0"

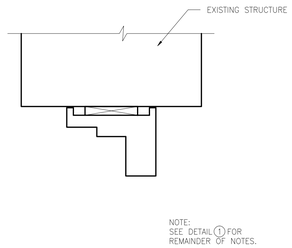

2 DOUBLE EGRESS DOOR JAMB TYPE P-1 OR P-2 PARTITION
3"=1'-0"

3 NOT USED
3"=1'-0"

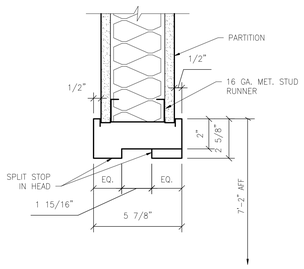

4 CORRIDOR FRAME - HEAD DETAIL TYPE P-1 OR P-2 PARTITION
3"=1'-0"

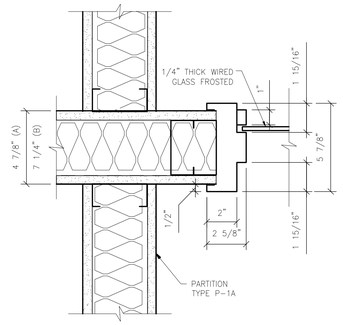

5 BORROWED LIGHT JAMB
3"=1'-0"

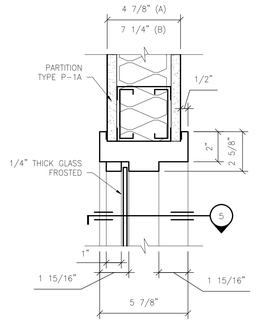

6 BORROWED LIGHT HEADER DETAIL
3"=1'-0"

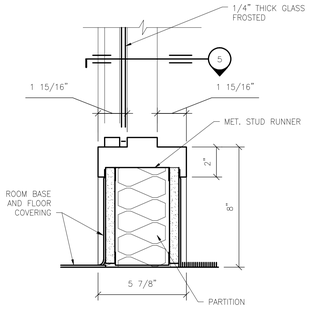

7 BORROWED LIGHT BASE DETAIL
3"=1'-0"

NOTE: ALL DOOR FRAMES TO BE HELD 6" FROM WALL ON HINGE SIDE UNLESS NOTED OTHERWISE

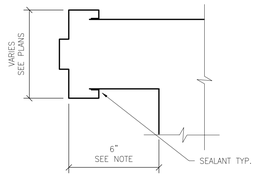

8 TYPICAL DOOR JAMB
3"=1'-0"

NOTE: HEAD DETAIL IS SIMILAR

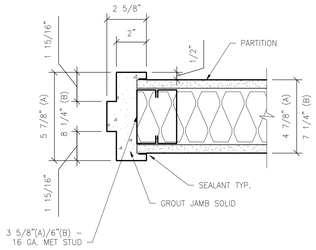

9 HOLLOW METAL DOOR JAMB PARTITION TYPES P1 OR P2
3"=1'-0"

NOTE: HEAD DETAIL IS SIMILAR

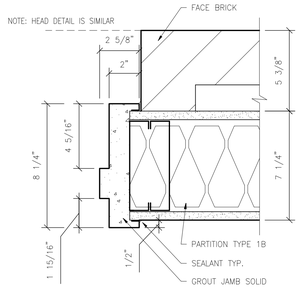

10 HOLLOW METAL DOOR JAMB AT BRICK WALL
3"=1'-0"

NOTE: HEAD DETAIL IS SIMILAR

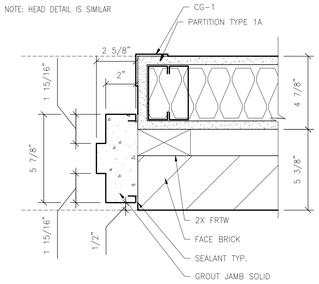

11 HOLLOW METAL DOOR JAMB AT BRICK AND STONE WALL
3"=1'-0"

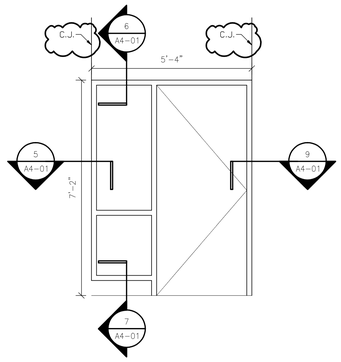

12 BL-1
1/2"=1'-0"

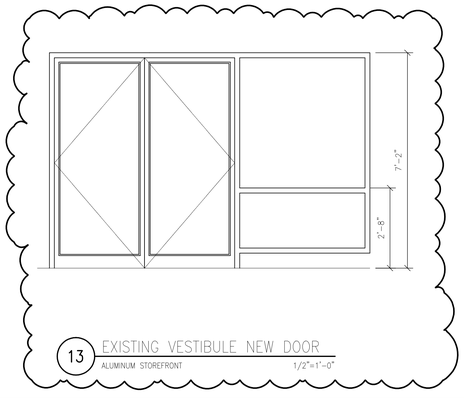

13 EXISTING VESTIBULE NEW DOOR
ALUMINUM STOREFRONT
1/2"=1'-0"

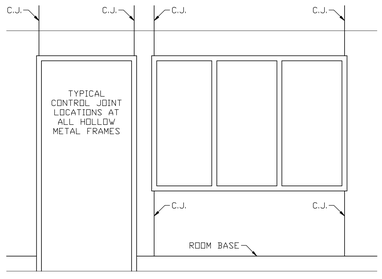

14 ELEVATION - CONTROL JOINT
1/2"=1'-0"

GENERAL NOTES

1. SEE SCHEDULE OF PARTITION TYPES ON SHEET LS-01. SEE FLOOR PLANS FOR APPLICABLE TYPES.
2. PARTITION DETAILS UTILIZING 6" STUDS WHERE SCHEDULED ARE SIMILAR TO THOSE WHERE 3 5/8" STUDS ARE SHOWN.

DESIGNER/ENGINEER DLL
CAD OPERATOR JC,TK,CK
QAQC/CHECKER RDB

Revisions	Date
ISSUED FOR BID	02/28/2012
PRE-BID AMENDMENT	05/10/2012

DesignLevel
455 Arden Road Columbus, OH 43214 p. 614.267.6603
www.DesignLeveLarchitecture.com
planning interior design architecture

© Copyright 2012

STATE OF OHIO ROBERT D. BARGA 07459 REGISTERED ARCHITECT
Professional Seal

Revised By:

Drawing Title: TYPICAL HOLLOW METAL DETAILS & BORROWED LIGHTS
SCALE: AS NOTED

Approved: Project Manager: RANDI FIORINA
Approved: Service Chief: GARY ABREU

Project Title: OPEN MRI SITE PREP
Building Number: 335
Checked: DESIGNLEVEL
Drawn:
Location: 4100 WEST THIRD STREET DAYTON, OH 45428

Date: 02-28-2012
Project No. 552-CSI-101
Drawing No. A4-01

VAMC, DAYTON
VA Department of Veterans Affairs

VA FORM 08-6231, OCT 1978

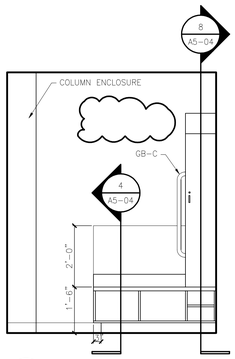

1 DRESSING ROOM 1/2"=1'-0"

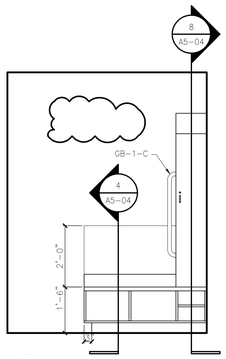

2 DRESSING ROOM 1/2"=1'-0"

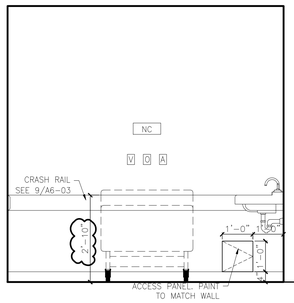

3 INPATIENT HOLDING 1/2"=1'-0"

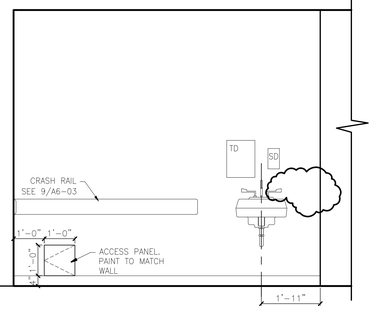

4 INPATIENT HOLDING 1/2"=1'-0"

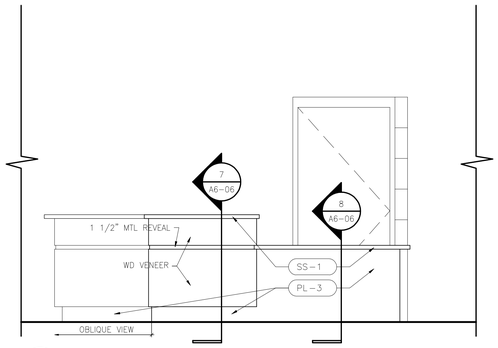

5 RECEPTION 1/2"=1'-0"

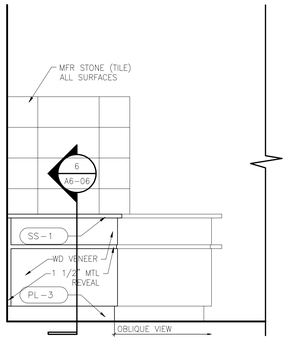

6 RECEPTION 1/2"=1'-0"

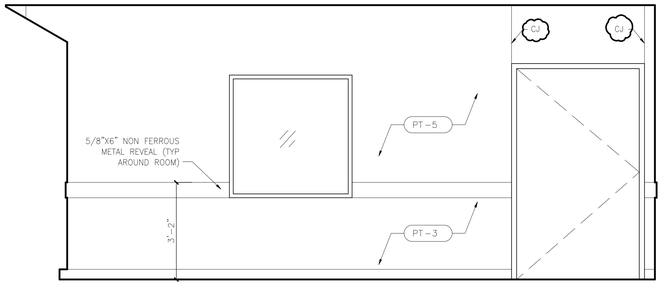

7 MRI ROOM 1/2"=1'-0"

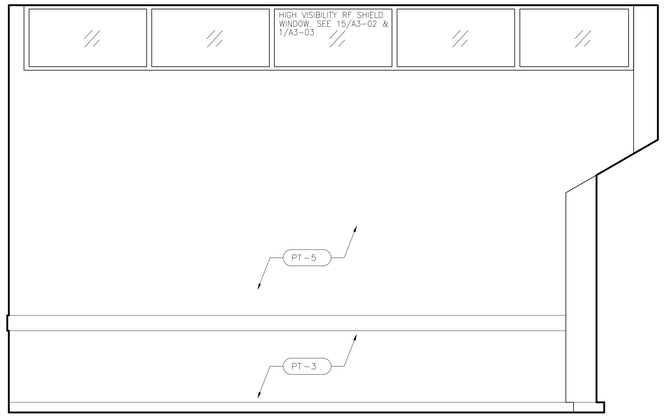

8 MRI ROOM 1/2"=1'-0"

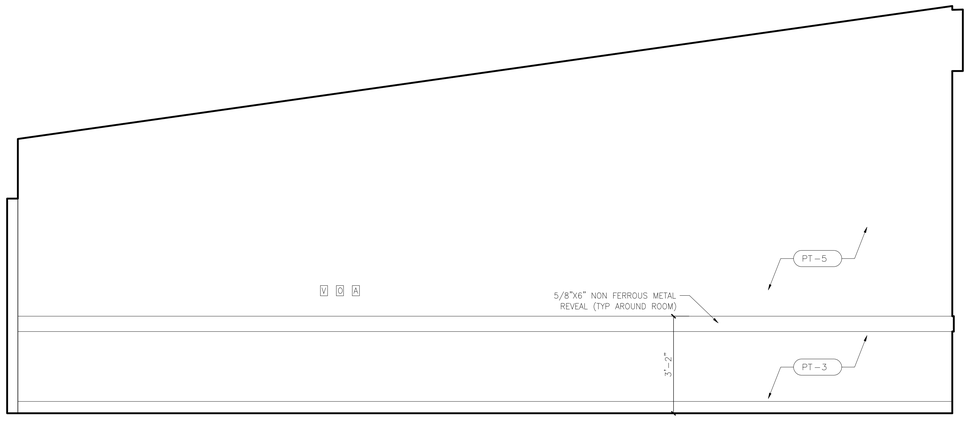

9 MRI ROOM 1/2"=1'-0"

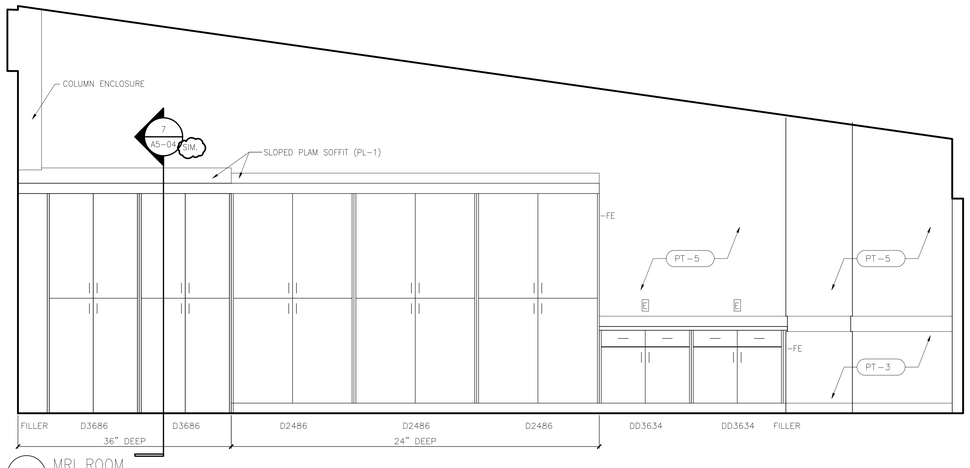

10 MRI ROOM 1/2"=1'-0"
PLASTIC LAMINATE (NON-FERROUS CONSTRUCTION)

SEE SHEET A5-01 FOR GENERAL NOTES

CABINET DESIGNATIONS / ABBREVIATIONS

THE FOLLOWING IS A MASTER LIST AND NOT ALL ITEMS MAY APPEAR IN THIS SET OF DRAWINGS. SEE ELEVATIONS AND DETAILS FOR LOCATIONS AND QUANTITIES OF ITEMS.

AG	ACCESS GROMMET
BC	BASE CASSETTE STORAGE
BP	BLANK PANEL
C	CART
CB	COUNTERTOP BRACE–SEE 3/A5–04
CCT	CUBICLE CURTAIN TRACK
CKBD	CHALKBOARD
CR	CHART RACK
CRT	COMPUTER TERMINAL
CT	COUNTERTOP – NO BACKSPLASH
D	DOOR BASE CABINET
DD	DRAWER/DOOR BASE CABINET
DFB	DRAWER/FILE BASE CABINET
DO	DRAWER/OPEN
DS	DOOR(S) SLIDING
ED	EQUAL DRAWERS
EP	EMERGENCY POWER
F	FILLER PIECE 3/4 " MIN. – 2 1/2 " MAX.
FB	FILM BIN
FD	FILE DRAWER W/ HANGING FOLDER RACK
FE	FINISHED END OR FIXED EQUIPMENT
FP	FOOT PEDAL VALVE BY PLUMBING
FV	FIELD VERIFY
GD	GLASS DOOR CABINET
HD	DOOR WALL CABINET
KBS	KEYBOARD SHELF
KS	KNEE SPACE
MC	MICROWAVE CABINET
ME–	MEDICAL EQUIPMENT BY OWNER
MF	MOBILE DRAWER/ FILE CABINET
MKBD	MARKERBOARD
MS	MONITOR SHELF
MW	MICROWAVE
NL	NARCOTICS LOCKER (ELEC. CONNECTIONS REQ'D.)
NLWL	NARCOTICS LOCKER WARNING LIGHT
O	OPEN FACE CABINET
OSC	OPEN SINK CABINET
OH	OPEN W/ HORIZONTAL SLOTS
OV	OPEN W/ VERTICAL SLOTS
PD	PENCIL DRAWER
PLLAM	PLASTIC LAMINATE
PS	PEDESTAL SUPPORT PANEL
RB	REMOVABLE RACK
REF	REFRIGERATOR
S	SINK
SB	SINK BASE
SC	STORAGE CABINET
SDC	SLIDING DOOR CABINET
SD–	SOAP DISPENSER
SHL	SHELF
SP	SPECIAL CABINET
ST, STL	STAINLESS STEEL
TD–	TOWEL DISPENSER
TS	TACK SURFACE
TL	TASK LIGHT
TKBD	TACKBOARD
UCR	UNDER COUNTER REFRIGERATOR
VT	VERTICAL PIGEON HOLE SLOTS
W	WIRE PASS THOUGH COVER
WS	WIRE SHELVING
WR	WARDROBE CABINET

SEE SHEET L–1 FOR OTHER LEGEND ABBREVIATIONS

GENERAL CASEWORK NOTES

1. REFER TO OTHER DRAWINGS AND PROJECT MANUAL FOR ADDITIONAL INFORMATION. NOT ALL EQUIPMENT IS SHOWN ON THE CASEWORK DRAWINGS.
2. SEE SHEET A6–01 FOR ADDITIONAL MOUNTING HEIGHT INFORMATION.
3. CASEWORK AND INTERIOR ELEVATIONS ARE FOR DESIGN INTENT ONLY. DO NOT SCALE THE DRAWINGS. FIELD MEASURE ALL AREAS THAT RECEIVE CASEWORK AFTER INSTALLATION OF NEW WALLS. NOTIFY RESIDENT ENGINEER OF DISCREPANCIES BETWEEN DRAWINGS AND FIELD CONDITIONS.
4. COORDINATE WITH MECHANICAL, ELECTRICAL, PLUMBING AND FIRE PROTECTION DRAWINGS FOR ADDITIONAL WALL MOUNTED ITEMS. CONTRACTORS ARE RESONSIBLE FOR ALL DEVICES WHETHER SHOWN ON CASEWORK DRAWINGS OR NOT. CONSULT RESIDENT ENGINEER CONCERNING ANY DISCREPANCIES.
5. ALL CABINETRY SHOWN HEREIN IS DESIGNED AS IF STOCK CASEWORK (WITH MODIFICATIONS) AS NOTED. IF CABINETRY IS DESIGNED AS CUSTOM MILLWORK, CERTAIN NOTATIONS, SUCH AS "FILLER", ETC. MAY NOT BE APPLICABLE.
6. WALL CABINETS 24" AND SHORTER TO INCLUDE ONE ADJUSTABLE SHELF; WALL CABINETS TALLER THAN 24" TO INCLUDE TWO ADJUSTABLE SHELVES. ALL BASE CABINETS (EXCLUDING SINK BASE) SHALL HAVE ONE ADJUSTABLE SHELF (UNO).
7. PROVIDE CONTINUOUS CLEAT ALONG COUNTERTOP BACKS AND ENDS. FASTEN COUNTERTOP TO CLEAT.
8. PROVIDE 1" RADIUS (IN PLAN) AT ALL EXPOSED COUNTERTOP CORNERS, UNLESS DETAILED OTHERWISE.
9. COORDINATE CEILING HEIGHTS SHOWN WITH FLOOR PLANS. CONSULT RESIDENT ENGINEER CONCERNING ANY DISCREPANCIES.
10. COORDINATE REQUIRED DIMENSIONS FOR ALL MEDICAL EQUIPMENT.

CABINET DESIGNATIONS LEGEND

DD2434 – FIRST TWO LETTERS–CABINET TYPE
DD2434 – FIRST TWO DIGITS–CABINET WIDTH
DD2434 – SECOND TWO DIGITS–CABINET HEIGHT

UTILITIES LEGEND

A	– AIR OUTLET	S	– LIGHT SWITCH
B	– EMERGENCY CALL –CODE BLUE	N	– NITROUS OXIDE OUTLET
		NC	– NURSE CALL
C	– COMPUTER	O	– OXYGEN OUTLET
D	– DICTAPHONE	P	– PRINTER
E	– ELECTRICAL DUPLEX RECEPTACLE	SL	– SLIDE OUTLET
	– EXISTING TO REMAIN	T	– TELEPHONE/ DATA
I	– INTERCOM	TV	– TELEVISION CABLE
J	– JUNCTION BOX	V	– VACCUUM OUTLET

PL–12 SEE A7 SERIES AND SPECIFICATIONS SECTION 09 06 00 SCHEDULE FOR FINISHES FOR MATERIAL COLOR

DESIGNER/ENGINEER DLL
CAD OPERATOR JG,TK,CK
QA/QC/CHECKER RDB

Revisions	Date
ISSUED FOR BID	02/28/2012
PRE–BID AMENDMENT	05/10/2012

DesignLevel
455 Arden Road Columbus, OH 43214 p. 614.267.6603
www.DesignLeveLArchitecture.com
planning interior design architecture

© Copyright 2012

STATE OF OHIO REGISTERED ARCHITECT ROBERT D. BARGA 07459
Professional Seal

Revised By:
– – –

Drawing Title: CASEWORK ELEVATIONS/ INTERIOR ELEVATIONS
SCALE: AS NOTED

Approved: Project Manager: RANDI FIORINA
Approved: Service Chief: GARY ABREU

Project Title: OPEN MRI SITE PREP
Building Number: 335
Checked: DESIGNLEVEL
Drawn:
Location: 4100 WEST THIRD STREET DAYTON, OH 45428

Date: 02–28–2012
Project No.: 552–CSI–101
Drawing No.: A5-01

VAMC, DAYTON
Department of Veterans Affairs
VA

VA FORM 08–6231, OCT 1978

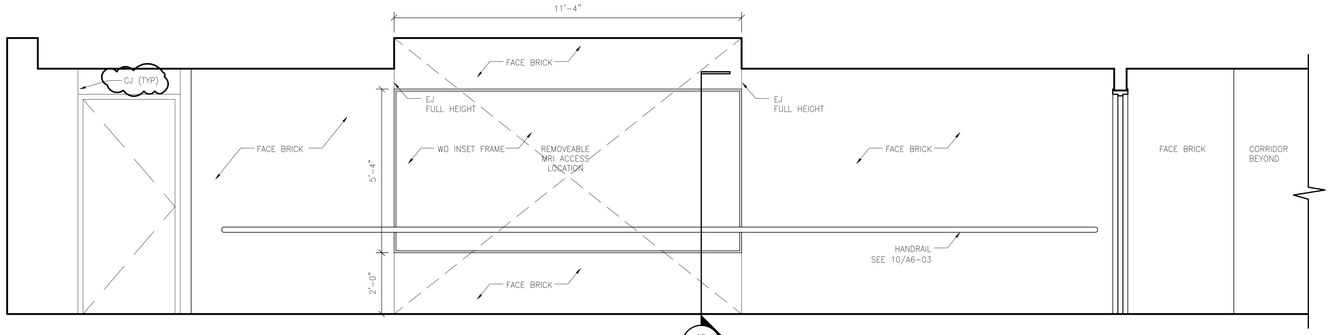

X CORRIDOR

1/2"=1'-0"

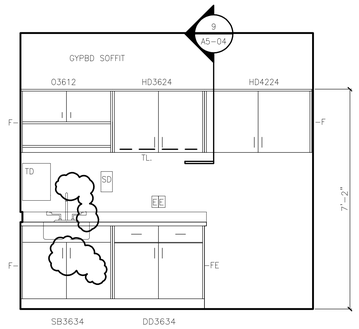

2 SOILED UTILITY

METAL CABINETS
STAINLESS STEEL COUNTERTOP W/ INTEGRAL BACKSPLASH
SINK W/ DRAINBOARD & SPILL EDGE

1/2"=1'-0"

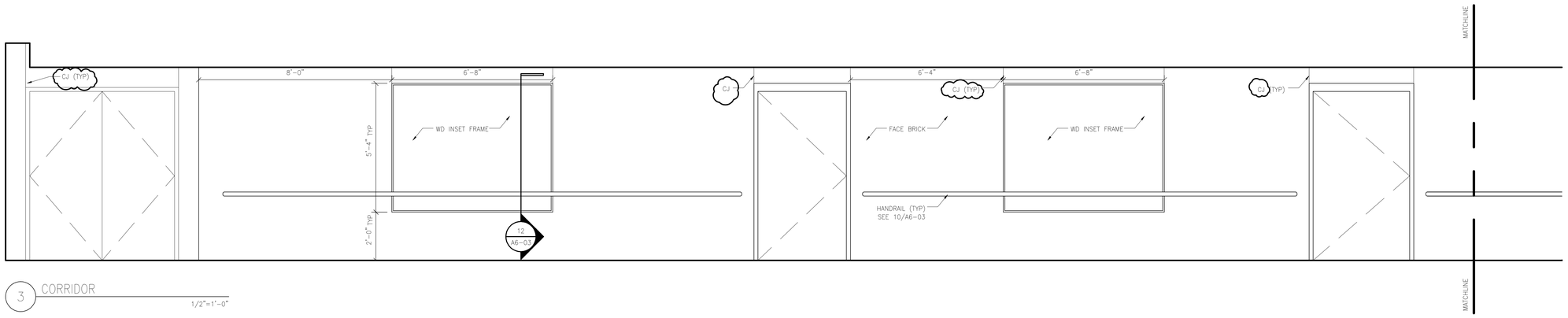

3 CORRIDOR

1/2"=1'-0"

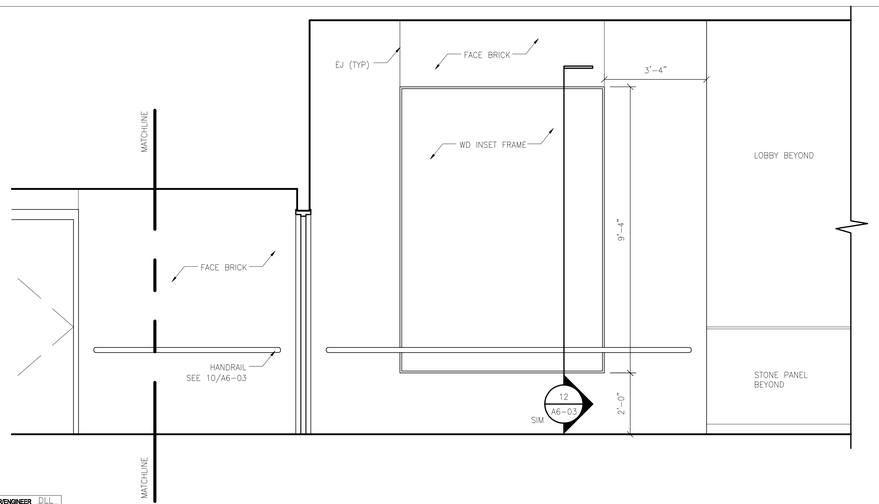

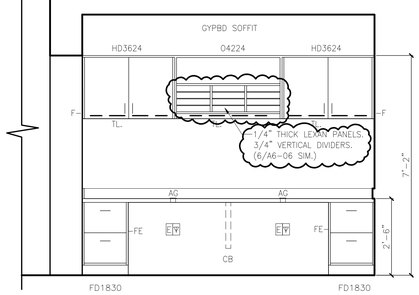

4 STAFF WORKROOM

PLASTIC LAMINATE

1/2"=1'-0"

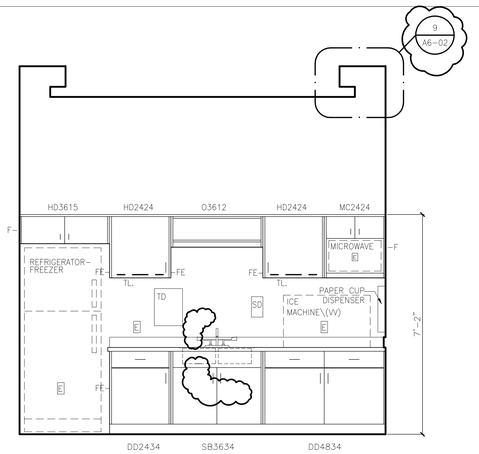

5 STAFF LOUNGE

PLASTIC LAMINATE
TOPSET COUNTERTOP

1/2"=1'-0"

SEE SHEET A5-01 FOR GENERAL NOTES

CABINET DESIGNATIONS / ABBREVIATIONS

THE FOLLOWING IS A MASTER LIST AND NOT ALL ITEMS MAY APPEAR IN THIS SET OF DRAWINGS. SEE ELEVATIONS AND DETAILS FOR LOCATIONS AND QUANTITIES OF ITEMS.

AG	ACCESS GROMMET
BC	BASE CASSETTE STORAGE
BP	BLANK PANEL
C	CART
CB	COUNTERTOP BRACE–SEE 3/A5–04
CCT	CUBICLE CURTAIN TRACK
CKBD	CHALKBOARD
CR	CHART RACK
CRT	COMPUTER TERMINAL
CT	COUNTERTOP – NO BACKSPLASH
D	DOOR BASE CABINET
DD	DRAWER/DOOR BASE CABINET
DFB	DRAWER/FILE BASE CABINET
DO	DRAWER/OPEN
DS	DOOR(S) SLIDING
ED	EQUAL DRAWERS
EP	EMERGENCY POWER
F	FILLER PIECE 3/4 " MIN. – 2 1/2 " MAX.
FB	FILM BIN
FD	FILE DRAWER W/ HANGING FOLDER RACK
FE	FINISHED END OR FIXED EQUIPMENT
FP	FOOT PEDAL VALVE BY PLUMBING
FV	FIELD VERIFY
GD	GLASS DOOR CABINET
HD	DOOR WALL CABINET
KBS	KEYBOARD SHELF
KS	KNEE SPACE
MC	MICROWAVE CABINET
ME–	MEDICAL EQUIPMENT BY OWNER
MF	MOBILE DRAWER/ FILE CABINET
MKBD	MARKERBOARD
MS	MONITOR SHELF
MW	MICROWAVE
NL	NARCOTICS LOCKER (ELEC. CONNECTIONS REQ'D.)
NLWL	NARCOTICS LOCKER WARNING LIGHT
O	OPEN FACE CABINET
OSC	OPEN SINK CABINET
OH	OPEN W/ HORIZONTAL SLOTS
OV	OPEN W/ VERTICAL SLOTS
PD	PENCIL DRAWER
PLLAM	PLASTIC LAMINATE
PS	PEDESTAL SUPPORT PANEL
RB	REMOVABLE RACK
REF	REFRIGERATOR
S	SINK
SB	SINK BASE
SC	STORAGE CABINET
SDC	SLIDING DOOR CABINET
SD–	SOAP DISPENSER
SHL	SHELF
SP	SPECIAL CABINET
ST, STL	STAINLESS STEEL
TD–	TOWEL DISPENSER
TS	TACK SURFACE
TL	TASK LIGHT
TKBD	TACKBOARD
UCR	UNDER COUNTER REFRIGERATOR
VT	VERTICAL PIGEON HOLE SLOTS
W	WIRE PASS THOUGH COVER
WS	WIRE SHELVING
WR	WARDROBE CABINET

SEE SHEET L–1 FOR OTHER LEGEND ABBREVIATIONS

GENERAL CASEWORK NOTES

1. REFER TO OTHER DRAWINGS AND PROJECT MANUAL FOR ADDITIONAL INFORMATION. NOT ALL EQUIPMENT IS SHOWN ON THE CASEWORK DRAWINGS.
2. SEE SHEET A6–01 FOR ADDITIONAL MOUNTING HEIGHT INFORMATION.
3. CASEWORK AND INTERIOR ELEVATIONS ARE FOR DESIGN INTENT ONLY. DO NOT SCALE THE DRAWINGS. FIELD MEASURE ALL AREAS THAT RECEIVE CASEWORK AFTER INSTALLATION OF NEW WALLS. NOTIFY RESIDENT ENGINEER OF DISCREPANCIES BETWEEN DRAWINGS AND FIELD CONDITIONS.
4. COORDINATE WITH MECHANICAL, ELECTRICAL, PLUMBING AND FIRE PROTECTION DRAWINGS FOR ADDITIONAL WALL MOUNTED ITEMS. CONTRACTORS ARE RESONSIBLE FOR ALL DEVICES WHETHER SHOWN ON CASEWORK DRAWINGS OR NOT. CONSULT RESIDENT ENGINEER CONCERNING ANY DISCREPANCIES.
5. ALL CABINETRY SHOWN HEREIN IS DESIGNED AS IF STOCK CASEWORK (WITH MODIFICATIONS) AS NOTED. IF CABINETRY IS DESIGNED AS CUSTOM MILLWORK, CERTAIN NOTATIONS, SUCH AS "FILLER", ETC. MAY NOT BE APPLICABLE.
6. WALL CABINETS 24" AND SHORTER TO INCLUDE ONE ADJUSTABLE SHELF; WALL CABINETS TALLER THAN 24" TO INCLUDE TWO ADJUSTABLE SHELVES. ALL BASE CABINETS (EXCLUDING SINK BASE) SHALL HAVE ONE ADJUSTABLE SHELF (UNO).
7. PROVIDE CONTINUOUS CLEAT ALONG COUNTERTOP BACKS AND ENDS. FASTEN COUNTERTOP TO CLEAT.
8. PROVIDE 1" RADIUS (IN PLAN) AT ALL EXPOSED COUNTERTOP CORNERS, UNLESS DETAILED OTHERWISE.
9. COORDINATE CEILING HEIGHTS SHOWN WITH FLOOR PLANS. CONSULT RESIDENT ENGINEER CONCERNING ANY DISCREPANCIES.
10. COORDINATE REQUIRED DIMENSIONS FOR ALL MEDICAL EQUIPMENT.

CABINET DESIGNATIONS LEGEND

DD2434 – FIRST TWO LETTERS–CABINET TYPE
DD2434 – FIRST TWO DIGITS–CABINET WIDTH
DD2434 – SECOND TWO DIGITS–CABINET HEIGHT

UTILITIES LEGEND

A	– AIR OUTLET	S	– LIGHT SWITCH
B	– EMERGENCY CALL –CODE BLUE	N	– NITROUS OXIDE OUTLET
		NC	– NURSE CALL
C	– COMPUTER	O	– OXYGEN OUTLET
D	– DICTAPHONE	P	– PRINTER
E	– ELECTRICAL DUPLEX RECEPTACLE	SL	– SLIDE OUTLET
	– EXISTING TO REMAIN	T	– TELEPHONE/ DATA
I	– INTERCOM	TV	– TELEVISION CABLE
J	– JUNCTION BOX	V	– VACCUUM OUTLET

PL–12 SEE A7 SERIES AND SPECIFICATIONS SECTION 09 06 00 SCHEDULE FOR FINISHES FOR MATERIAL COLOR

DESIGNER/ENGINEER DLL
CAD OPERATOR JLJ,K,CK
QA/QC/CHECKER RDB

Revisions	Date
ISSUED FOR BID	02/28/2012
PRE–BID AMENDMENT	05/10/2012

DesignLevel
455 Arden Road Columbus, OH 43214 p. 614.267.6603
www.DesignLeveLArchitecture.com
planning interior design architecture

© Copyright 2012

STATE OF OHIO ROBERT D. BARGA 07459 REGISTERED ARCHITECT
Professional Seal

Revised By:
– – –

Drawing Title: CASEWORK ELEVATIONS/ INTERIOR ELEVATIONS
SCALE: AS NOTED

Approved: Project Manager: RANDI FIORINA
Approved: Service Chief: GARY ABREU

Project Title: OPEN MRI SITE PREP

Building Number: 335
Checked: DESIGNLEVEL
Drawn:
Location: 4100 WEST THIRD STREET DAYTON, OH 45428

Date: 02–28–2012
Project No. 552–CSI–101
Drawing No. A5-02

VAMC, DAYTON
VA Department of Veterans Affairs

VA FORM 08–6231, OCT 1978

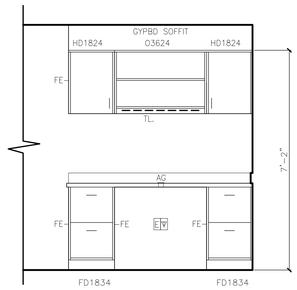

1 CONTROL ROOM
PLASTIC LAMINATE 1/2"=1'-0"

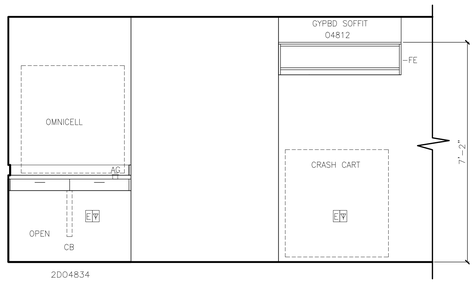

2 CONTROL ROOM
PLASTIC LAMINATE 1/2"=1'-0"

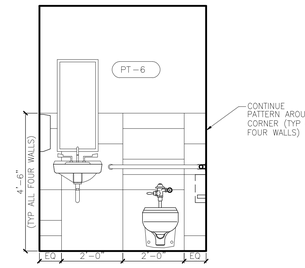

3 TOILET
1/2"=1'-0"

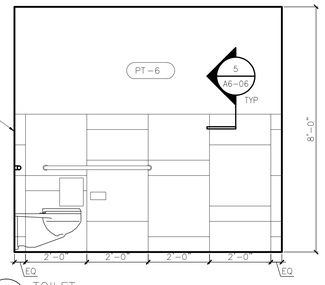

4 TOILET
1/2"=1'-0"

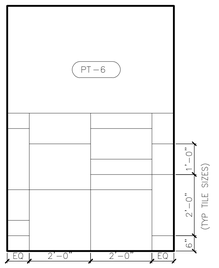

5 TOILET
1/2"=1'-0"

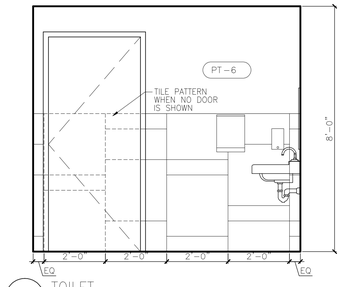

6 TOILET
1/2"=1'-0"

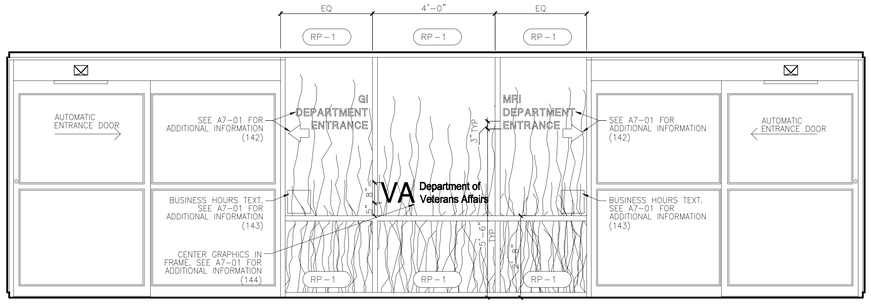

7 VESTIBULE
1/2"=1'-0"

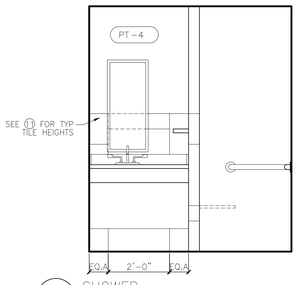

8 SHOWER
1/2"=1'-0"

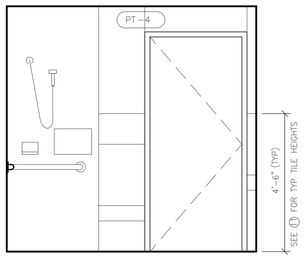

9 SHOWER
1/2"=1'-0"

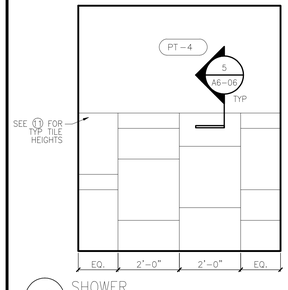

10 SHOWER
1/2"=1'-0"

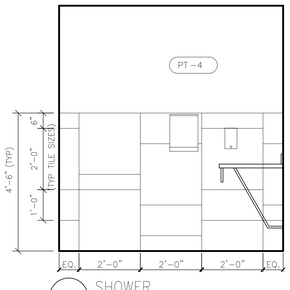

11 SHOWER
1/2"=1'-0"

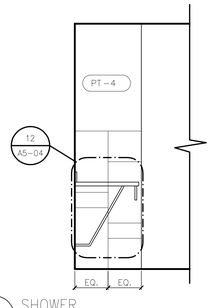

12 SHOWER
1/2"=1'-0"

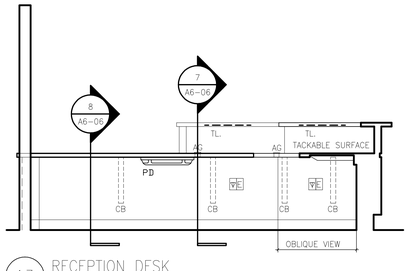

13 RECEPTION DESK
1/2"=1'-0"

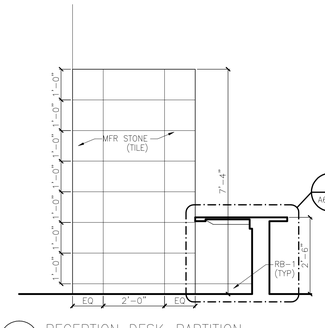

14 RECEPTION DESK-PARTITION
1/2"=1'-0"

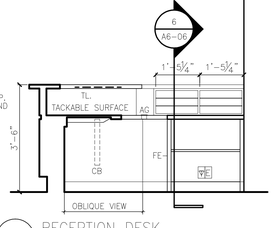

15 RECEPTION DESK
1/2"=1'-0"

SEE SHEET A5-01 FOR GENERAL NOTES

CABINET DESIGNATIONS / ABBREVIATIONS

THE FOLLOWING IS A MASTER LIST AND NOT ALL ITEMS MAY APPEAR IN THIS SET OF DRAWINGS. SEE ELEVATIONS AND DETAILS FOR LOCATIONS AND QUANTITIES OF ITEMS.

AG	ACCESS GROMMET
BC	BASE CASSETTE STORAGE
BP	BLANK PANEL
C	CART
CB	COUNTERTOP BRACE-SEE 3/A5-04
CCT	CUBICLE CURTAIN TRACK
CKBD	CHALKBOARD
CR	CHART RACK
CRT	COMPUTER TERMINAL
CT	COUNTERTOP - NO BACKSPLASH
D	DOOR BASE CABINET
DD	DRAWER/DOOR BASE CABINET
DFB	DRAWER/FILE BASE CABINET
DO	DRAWER/OPEN
DS	DOOR(S) SLIDING
ED	EQUAL DRAWERS
EP	EMERGENCY POWER
F	FILLER PIECE 3/4 " MIN. - 2 1/2 " MAX.
FB	FILM BIN
FD	FILE DRAWER W/ HANGING FOLDER RACK
FE	FINISHED END OR FIXED EQUIPMENT
FP	FOOT PEDAL VALVE BY PLUMBING
FV	FIELD VERIFY
GD	GLASS DOOR CABINET
HD	DOOR WALL CABINET
KBS	KEYBOARD SHELF
KS	KNEE SPACE
MC	MICROWAVE CABINET
ME-	MEDICAL EQUIPMENT BY OWNER
MF	MOBILE DRAWER/ FILE CABINET
MKBD	MARKERBOARD
MS	MONITOR SHELF
MW	MICROWAVE
NL	NARCOTICS LOCKER (ELEC. CONNECTIONS REQ'D.)
NLWL	NARCOTICS LOCKER WARNING LIGHT
O	OPEN FACE CABINET
OSC	OPEN SINK CABINET
OH	OPEN W/ HORIZONTAL SLOTS
OV	OPEN W/ VERTICAL SLOTS
PD	PENCIL DRAWER
PLLAM	PLASTIC LAMINATE
PS	PEDESTAL SUPPORT PANEL
RB	REMOVABLE RACK
REF	REFRIGERATOR
S	SINK
SB	SINK BASE
SC	STORAGE CABINET
SDC	SLIDING DOOR CABINET
SD-	SOAP DISPENSER
SHL	SHELF
SP	SPECIAL CABINET
ST. STL.	STAINLESS STEEL
TD-	TOWEL DISPENSER
TS	TACK SURFACE
TL	TASK LIGHT
TKBD	TACKBOARD
UCR	UNDER COUNTER REFRIGERATOR
VT	VERTICAL PIGEON HOLE SLOTS
W	WIRE PASS THOUGH COVER
WS	WIRE SHELVING
WR	WARDROBE CABINET

SEE SHEET L-1 FOR OTHER LEGEND ABBREVIATIONS

GENERAL CASEWORK NOTES

1. REFER TO OTHER DRAWINGS AND PROJECT MANUAL FOR ADDITIONAL INFORMATION. NOT ALL EQUIPMENT IS SHOWN ON THE CASEWORK DRAWINGS.
2. SEE SHEET A6-01 FOR ADDITIONAL MOUNTING HEIGHT INFORMATION.
3. CASEWORK AND INTERIOR ELEVATIONS ARE FOR DESIGN INTENT ONLY. DO NOT SCALE THE DRAWINGS. FIELD MEASURE ALL AREAS THAT RECEIVE CASEWORK AFTER INSTALLATION OF NEW WALLS. NOTIFY RESIDENT ENGINEER OF DISCREPANCIES BETWEEN DRAWINGS AND FIELD CONDITIONS.
4. COORDINATE WITH MECHANICAL, ELECTRICAL, PLUMBING AND FIRE PROTECTION DRAWINGS FOR ADDITIONAL WALL MOUNTED ITEMS. CONTRACTORS ARE RESONSIBLE FOR ALL DEVICES WHETHER SHOWN ON CASEWORK DRAWINGS OR NOT. CONSULT RESIDENT ENGINEER CONCERNING ANY DISCREPANCIES.
5. ALL CABINETRY SHOWN HEREIN IS DESIGNED AS IF STOCK CASEWORK (WITH MODIFICATIONS) AS NOTED. IF CABINETRY IS DESIGNED AS CUSTOM MILLWORK, CERTAIN NOTATIONS, SUCH AS "FILLER", ETC. MAY NOT BE APPLICABLE.
6. WALL CABINETS 24" AND SHORTER TO INCLUDE ONE ADJUSTABLE SHELF. WALL CABINETS TALLER THAN 24" TO INCLUDE TWO ADJUSTABLE SHELVES. ALL BASE CABINETS (EXCLUDING SINK BASE) SHALL HAVE ONE ADJUSTABLE SHELF (UNO).
7. PROVIDE CONTINUOUS CLEAT ALONG COUNTERTOP BACKS AND ENDS. FASTEN COUNTERTOP TO CLEAT.
8. PROVIDE 1" RADIUS (IN PLAN) AT ALL EXPOSED COUNTERTOP CORNERS, UNLESS DETAILED OTHERWISE.
9. COORDINATE CEILING HEIGHTS SHOWN WITH FLOOR PLANS. CONSULT RESIDENT ENGINEER CONCERNING ANY DISCREPANCIES.
10. COORDINATE REQUIRED DIMENSIONS FOR ALL MEDICAL EQUIPMENT.

CABINET DESIGNATIONS LEGEND

DD2434 - FIRST TWO LETTERS-CABINET TYPE
DD2434 - FIRST TWO DIGITS-CABINET WIDTH
DD2434 - SECOND TWO DIGITS-CABINET HEIGHT

UTILITIES LEGEND

A	- AIR OUTLET	$	- LIGHT SWITCH
B	- EMERGENCY CALL -CODE BLUE	N	- NITROUS OXIDE OUTLET
		NC	- NURSE CALL
C	- COMPUTER	O	- OXYGEN OUTLET
D	- DICTAPHONE	P	- PRINTER
E	- ELECTRICAL DUPLEX RECEPTACLE	SL	- SLIDE OUTLET
	- EXISTING TO REMAIN	T	- TELEPHONE/ DATA
I	- INTERCOM	TV	- TELEVISION CABLE
J	- JUNCTION BOX	V	- VACCUUM OUTLET

PL-12 SEE A7 SERIES AND SPECIFICATIONS SECTION 09 06 00 SCHEDULE FOR FINISHES FOR MATERIAL COLOR

DESIGNER/ENGINEER DLL
CAD OPERATOR JG,TK,CK
QA/QC/CHECKER RDB

Revisions	Date
ISSUED FOR BID	02/28/2012
PRE-BID AMENDMENT	05/10/2012

DesignLevel
455 Arden Road Columbus, OH 43214 p. 614.267.6603
www.DesignLeveLarchitecture.com
planning interior design architecture

© Copyright 2012

STATE OF OHIO ROBERT D. BARGA 07459 REGISTERED ARCHITECT
Professional Seal

Revised By:

Drawing Title: CASEWORK ELEVATIONS/ INTERIOR ELEVATIONS
SCALE: AS NOTED

Approved: Project Manager: RANDI FIORINA
Approved: Service Chief: GARY ABREU

Project Title: OPEN MRI SITE PREP
Building Number: 335
Checked: DESIGNLEVEL
Drawn:
Location: 4100 WEST THIRD STREET DAYTON, OH 45428

Date: 02-28-2012
Project No. 552-CSI-101
Drawing No. A5-03

VAMC, DAYTON
Department of Veterans Affairs

VA FORM 08-6231, OCT 1978

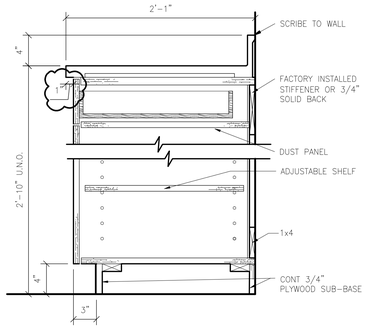

1 BASE CABINET
1 1/2" = 1'-0"

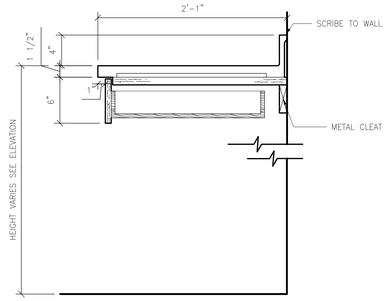

2 TYPICAL COUNTERTOP AND DRAWER
1 1/2" = 1'-0"

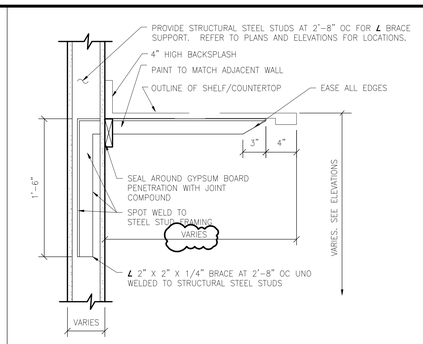

3 COUNTERTOP BRACE AT STUD PARTITION
1 1/2" = 1'-0"

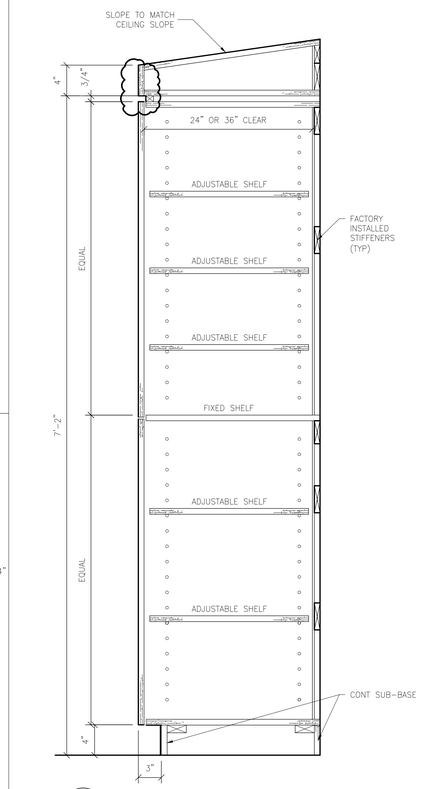

7 TALL CABINET
NOTE: 24" CLEAR TALL CABINET DRAWN (36" CLEAR TALL CABINET SIMILAR. DELETE SUB-BASE. ADJUST DOOR HEIGHTS TO FINISH 3/4" A.F.F.)
1 1/2" = 1'-0"

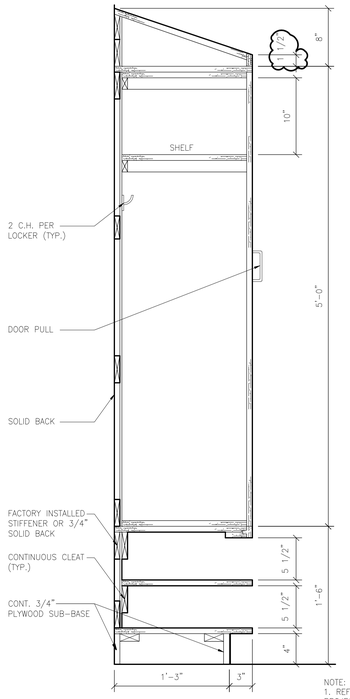

NOTE:
1. REFER TO PROJECT MANUAL FOR DETAILED CONSTRUCTION INFORMATION.
2. PL LAM ALL EXPOSED SURFACES ON 3/4" STOCK

8 CASEWORK LOCKERS / SHOE CUBBIES
DRESSING ROOM
1 1/2" = 1'-0"

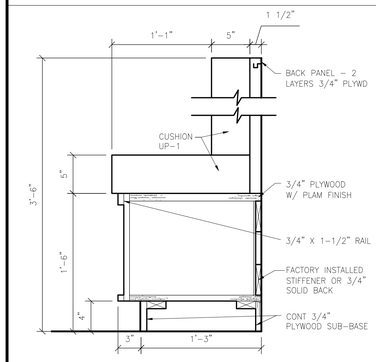

4 SECTION – BENCH
DRESSING ROOM
1 1/2" = 1'-0"

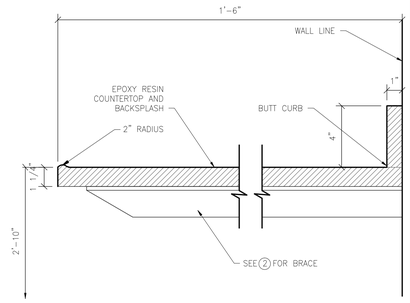

5 EPOXY RESIN COUNTERTOP
3" = 1'-0"

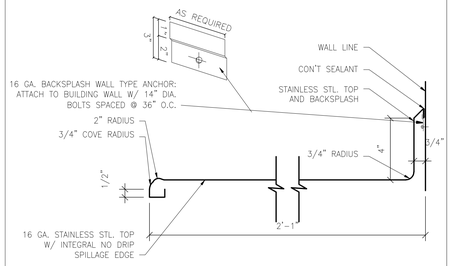

6 STAINLESS STEEL COUNTERTOP
3" = 1'-0"

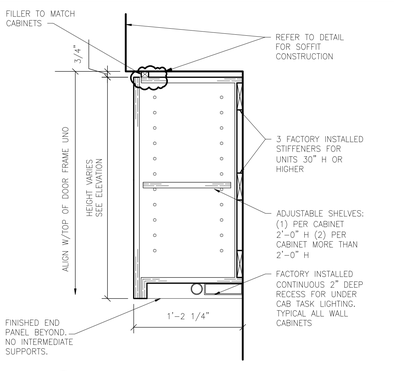

9 WALL CABINET
1 1/2" = 1'-0"

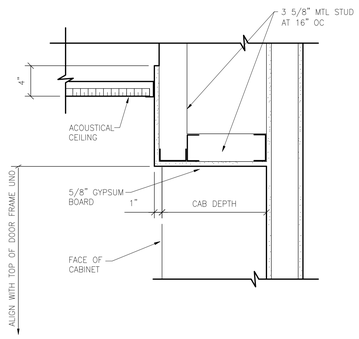

10 TYPICAL SOFFIT OVER CABINET
1 1/2" = 1'-0"

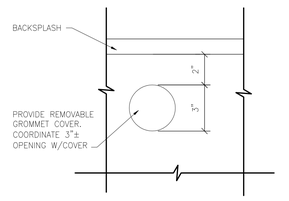

* NOTE: COORDINATE SIZE AND LOCATION WITH OWNER

11 COUNTERTOP – ACCESS GROMMET
3" = 1'-0"

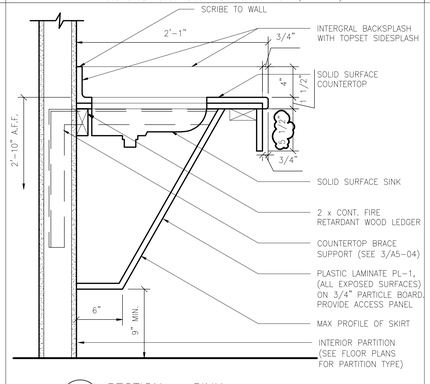

12 SECTION – SINK
1 1/2" = 1'-0"

SEE SHEET A5-01 FOR GENERAL NOTES

CABINET DESIGNATIONS / ABBREVIATIONS

THE FOLLOWING IS A MASTER LIST AND NOT ALL ITEMS MAY APPEAR IN THIS SET OF DRAWINGS. SEE ELEVATIONS AND DETAILS FOR LOCATIONS AND QUANTITIES OF ITEMS.

AG	ACCESS GROMMET
BC	BASE CASSETTE STORAGE
BP	BLANK PANEL
C	CART
CB	COUNTERTOP BRACE–SEE 3/A5–04
CCT	CUBICLE CURTAIN TRACK
CKBD	CHALKBOARD
CR	CHART RACK
CRT	COMPUTER TERMINAL
CT	COUNTERTOP – NO BACKSPLASH
D	DOOR BASE CABINET
DD	DRAWER/DOOR BASE CABINET
DFB	DRAWER/FILE BASE CABINET
DO	DRAWER/OPEN
DS	DOOR(S) SLIDING
ED	EQUAL DRAWERS
EP	EMERGENCY POWER
F	FILLER PIECE 3/4 " MIN. – 2 1/2 " MAX.
FB	FILM BIN
FD	FILE DRAWER W/ HANGING FOLDER RACK
FE	FINISHED END OR FIXED EQUIPMENT
FP	FOOT PEDAL VALVE BY PLUMBING
FV	FIELD VERIFY
GD	GLASS DOOR CABINET
HD	DOOR WALL CABINET
KBS	KEYBOARD SHELF
KS	KNEE SPACE
MC	MICROWAVE CABINET
ME–	MEDICAL EQUIPMENT BY OWNER
MF	MOBILE DRAWER/ FILE CABINET
MKBD	MARKERBOARD
MS	MONITOR SHELF
MW	MICROWAVE
NL	NARCOTICS LOCKER (ELEC. CONNECTIONS REQ'D.)
NLWL	NARCOTICS LOCKER WARNING LIGHT
O	OPEN FACE CABINET
OSC	OPEN SINK CABINET
OH	OPEN W/ HORIZONTAL SLOTS
OV	OPEN W/ VERTICAL SLOTS
PD	PENCIL DRAWER
PLLAM	PLASTIC LAMINATE
PS	PEDESTAL SUPPORT PANEL
RB	REMOVABLE RACK
REF	REFRIGERATOR
S	SINK
SB	SINK BASE
SC	STORAGE CABINET
SDC	SLIDING DOOR CABINET
SD–	SOAP DISPENSER
SHL	SHELF
SP	SPECIAL CABINET
ST, STL	STAINLESS STEEL
TD–	TOWEL DISPENSER
TS	TACK SURFACE
TL	TASK LIGHT
TKBD	TACKBOARD
UCR	UNDER COUNTER REFRIGERATOR
VT	VERTICAL PIGEON HOLE SLOTS
W	WIRE PASS THOUGH COVER
WS	WIRE SHELVING
WR	WARDROBE CABINET

SEE SHEET L–1 FOR OTHER LEGEND ABBREVIATIONS

GENERAL CASEWORK NOTES

1. REFER TO OTHER DRAWINGS AND PROJECT MANUAL FOR ADDITIONAL INFORMATION. NOT ALL EQUIPMENT IS SHOWN ON THE CASEWORK DRAWINGS.
2. SEE SHEET A6–01 FOR ADDITIONAL MOUNTING HEIGHT INFORMATION.
3. CASEWORK AND INTERIOR ELEVATIONS ARE FOR DESIGN INTENT ONLY. DO NOT SCALE THE DRAWINGS. FIELD MEASURE ALL AREAS THAT RECEIVE CASEWORK AFTER INSTALLATION OF NEW WALLS. NOTIFY RESIDENT ENGINEER OF DISCREPANCIES BETWEEN DRAWINGS AND FIELD CONDITIONS.
4. COORDINATE WITH MECHANICAL, ELECTRICAL, PLUMBING AND FIRE PROTECTION DRAWINGS FOR ADDITIONAL WALL MOUNTED ITEMS. CONTRACTORS ARE RESONSIBLE FOR ALL DEVICES WHETHER SHOWN ON CASEWORK DRAWINGS OR NOT. CONSULT RESIDENT ENGINEER CONCERNING ANY DISCREPANCIES.
5. ALL CABINETRY SHOWN HEREIN IS DESIGNED AS IF STOCK CASEWORK (WITH MODIFICATIONS) AS NOTED. IF CABINETRY IS DESIGNED AS CUSTOM MILLWORK, CERTAIN NOTATIONS, SUCH AS "ELEV" ETC., MAY NOT BE APPLICABLE.
6. WALL CABINETS 24" AND SHORTER TO INCLUDE ONE ADJUSTABLE SHELF; WALL CABINETS TALLER THAN 24" TO INCLUDE TWO ADJUSTABLE SHELVES. ALL BASE CABINETS (EXCLUDING SINK BASE) SHALL HAVE ONE ADJUSTABLE SHELF (UNO).
7. PROVIDE CONTINUOUS CLEAT ALONG COUNTERTOP BACKS AND ENDS. FASTEN COUNTERTOP TO CLEAT.
8. PROVIDE 1" RADIUS (IN PLAN) AT ALL EXPOSED COUNTERTOP CORNERS, UNLESS DETAILED OTHERWISE.
9. COORDINATE CEILING HEIGHTS SHOWN WITH FLOOR PLANS. CONSULT RESIDENT ENGINEER CONCERNING ANY DISCREPANCIES.
10. COORDINATE REQUIRED DIMENSIONS FOR ALL MEDICAL EQUIPMENT.

CABINET DESIGNATIONS LEGEND

DD2434 – FIRST TWO LETTERS–CABINET TYPE
DD2434 – FIRST TWO DIGITS–CABINET WIDTH
DD2434 – SECOND TWO DIGITS–CABINET HEIGHT

UTILITIES LEGEND

A	– AIR OUTLET	S	– LIGHT SWITCH
B	– EMERGENCY CALL –CODE BLUE	N	– NITROUS OXIDE OUTLET
		NC	– NURSE CALL
C	– COMPUTER	O	– OXYGEN OUTLET
D	– DICTAPHONE	P	– PRINTER
E	– ELECTRICAL DUPLEX RECEPTACLE	SL	– SLIDE OUTLET
	– EXISTING TO REMAIN	T	– TELEPHONE/ DATA
I	– INTERCOM	TV	– TELEVISION CABLE
J	– JUNCTION BOX	V	– VACCUUM OUTLET

PL–12 SEE A7 SERIES AND SPECIFICATIONS SECTION 09 06 00 SCHEDULE FOR FINISHES FOR MATERIAL COLOR

DESIGNER/ENGINEER DLL
CAD OPERATOR JG,TK,CK
QA/QC/CHECKER RDB

Revisions	Date
ISSUED FOR BID	02/28/2012
PRE–BID AMENDMENT	05/10/2012

DesignLevel
455 Arden Road Columbus, OH 43214 p. 614.267.6603
www.DesignLeveLarchitecture.com
planning interior design architecture

© Copyright 2012

STATE OF OHIO ROBERT D. BARGA 07459 REGISTERED ARCHITECT
Professional Seal

Revised By:
– – –

Drawing Title: CASEWORK DETAILS
SCALE: AS NOTED

Project Title: OPEN MRI SITE PREP

Approved: Project Manager: RANDI FIORINA
Approved: Service Chief: GARY ABREU

Building Number: 335
Checked: DESIGNLEVEL
Drawn:
Location: 4100 WEST THIRD STREET DAYTON, OH 45428

Date: 02–28–2012
Project No. 552–CSI–101
Drawing No. A5-04

VAMC, DAYTON
Department of Veterans Affairs
VA

VA FORM 08–6231, OCT 1978

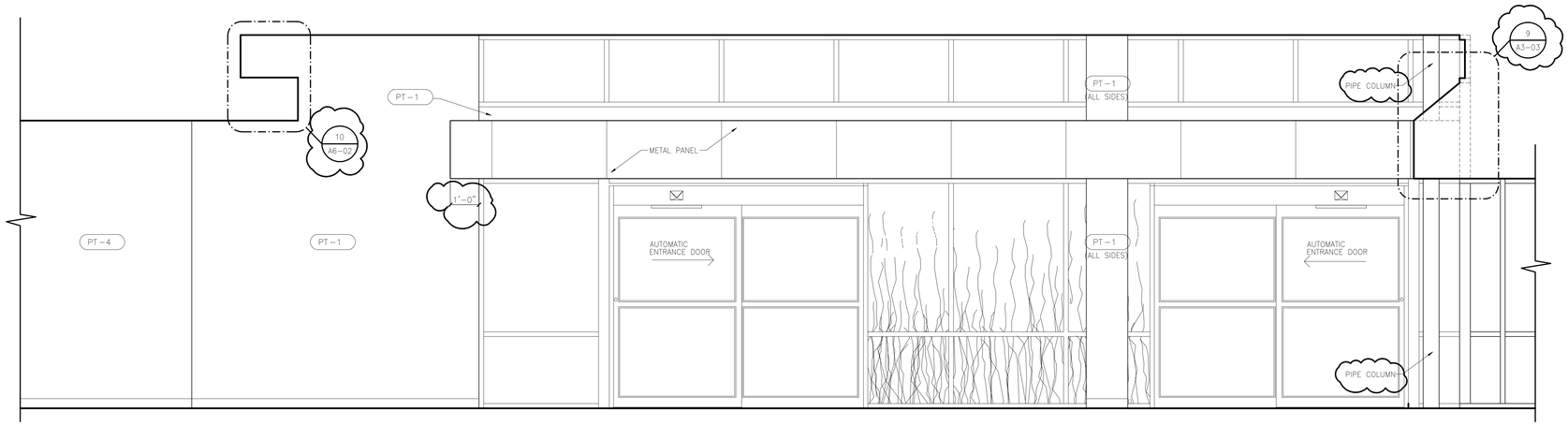

1 LOBBY

1/2"=1'-0"

SEE SHEET A5-01 FOR GENERAL NOTES

CABINET DESIGNATIONS / ABBREVIATIONS

THE FOLLOWING IS A MASTER LIST AND NOT ALL ITEMS MAY APPEAR IN THIS SET OF DRAWINGS. SEE ELEVATIONS AND DETAILS FOR LOCATIONS AND QUANTITIES OF ITEMS.

AG	ACCESS GROMMET
BC	BASE CASSETTE STORAGE
BP	BLANK PANEL
C	CART
CB	COUNTERTOP BRACE–SEE 3/A5–04
CCT	CUBICLE CURTAIN TRACK
CKBD	CHALKBOARD
CR	CHART RACK
CRT	COMPUTER TERMINAL
CT	COUNTERTOP – NO BACKSPLASH
D	DOOR BASE CABINET
DD	DRAWER/DOOR BASE CABINET
DFB	DRAWER/FILE BASE CABINET
DO	DRAWER/OPEN
DS	DOOR(S) SLIDING
ED	EQUAL DRAWERS
EP	EMERGENCY POWER
F	FILLER PIECE 3/4 " MIN. – 2 1/2 " MAX.
FB	FILM BIN
FD	FILE DRAWER W/ HANGING FOLDER RACK
FE	FINISHED END OR FIXED EQUIPMENT
FP	FOOT PEDAL VALVE BY PLUMBING
FV	FIELD VERIFY
GD	GLASS DOOR CABINET
HD	DOOR WALL CABINET
KBS	KEYBOARD SHELF
KS	KNEE SPACE
MC	MICROWAVE CABINET
ME–	MEDICAL EQUIPMENT BY OWNER
MF	MOBILE DRAWER/ FILE CABINET
MKBD	MARKERBOARD
MS	MONITOR SHELF
MW	MICROWAVE
NL	NARCOTICS LOCKER (ELEC. CONNECTIONS REQ'D.)
NLWL	NARCOTICS LOCKER WARNING LIGHT
O	OPEN FACE CABINET
OSC	OPEN SINK CABINET
OH	OPEN W/ HORIZONTAL SLOTS
OV	OPEN W/ VERTICAL SLOTS
PD	PENCIL DRAWER
PLLAM	PLASTIC LAMINATE
PS	PEDESTAL SUPPORT PANEL
RB	REMOVABLE RACK
REF	REFRIGERATOR
S	SINK
SB	SINK BASE
SC	STORAGE CABINET
SDC	SLIDING DOOR CABINET
SD–	SOAP DISPENSER
SHL	SHELF
SP	SPECIAL CABINET
ST, STL	STAINLESS STEEL
TD–	TOWEL DISPENSER
TS	TACK SURFACE
TL	TASK LIGHT
TKBD	TACKBOARD
UCR	UNDER COUNTER REFRIGERATOR
VT	VERTICAL PIGEON HOLE SLOTS
W	WIRE PASS THOUGH COVER
WS	WIRE SHELVING
WR	WARDROBE CABINET

SEE SHEET L–1 FOR OTHER LEGEND ABBREVIATIONS

GENERAL CASEWORK NOTES

1. REFER TO OTHER DRAWINGS AND PROJECT MANUAL FOR ADDITIONAL INFORMATION. NOT ALL EQUIPMENT IS SHOWN ON THE CASEWORK DRAWINGS.
2. SEE SHEET A6–01 FOR ADDITIONAL MOUNTING HEIGHT INFORMATION.
3. CASEWORK AND INTERIOR ELEVATIONS ARE FOR DESIGN INTENT ONLY. DO NOT SCALE THE DRAWINGS. FIELD MEASURE ALL AREAS THAT RECEIVE CASEWORK AFTER INSTALLATION OF NEW WALLS. NOTIFY RESIDENT ENGINEER OF DISCREPANCIES BETWEEN DRAWINGS AND FIELD CONDITIONS.
4. COORDINATE WITH MECHANICAL, ELECTRICAL, PLUMBING AND FIRE PROTECTION DRAWINGS FOR ADDITIONAL WALL MOUNTED ITEMS. CONTRACTORS ARE RESONSIBLE FOR ALL DEVICES WHETHER SHOWN ON CASEWORK DRAWINGS OR NOT. CONSULT RESIDENT ENGINEER CONCERNING ANY DISCREPANCIES.
5. ALL CABINETRY SHOWN HEREIN IS DESIGNED AS IF STOCK CASEWORK (WITH MODIFICATIONS) AS NOTED. IF CABINETRY IS DESIGNED AS CUSTOM MILLWORK, CERTAIN NOTATIONS, SUCH AS "FILLER", ETC. MAY NOT BE APPLICABLE.
6. WALL CABINETS 24" AND SHORTER TO INCLUDE ONE ADJUSTABLE SHELF; WALL CABINETS TALLER THAN 24" TO INCLUDE TWO ADJUSTABLE SHELVES. ALL BASE CABINETS (EXCLUDING SINK BASE) SHALL HAVE ONE ADJUSTABLE SHELF (UNO).
7. PROVIDE CONTINUOUS CLEAT ALONG COUNTERTOP BACKS AND ENDS. FASTEN COUNTERTOP TO CLEAT.
8. PROVIDE 1" RADIUS (IN PLAN) AT ALL EXPOSED COUNTERTOP CORNERS, UNLESS DETAILED OTHERWISE.
9. COORDINATE CEILING HEIGHTS SHOWN WITH FLOOR PLANS. CONSULT RESIDENT ENGINEER CONCERNING ANY DISCREPANCIES.
10. COORDINATE REQUIRED DIMENSIONS FOR ALL MEDICAL EQUIPMENT.

CABINET DESIGNATIONS LEGEND

DD2434 – FIRST TWO LETTERS–CABINET TYPE

DD2434 – FIRST TWO DIGITS–CABINET WIDTH

DD2434 – SECOND TWO DIGITS–CABINET HEIGHT

UTILITIES LEGEND

A	– AIR OUTLET	S	– LIGHT SWITCH
B	– EMERGENCY CALL –CODE BLUE	N	– NITROUS OXIDE OUTLET
		NC	– NURSE CALL
C	– COMPUTER	O	– OXYGEN OUTLET
D	– DICTAPHONE	P	– PRINTER
E	– ELECTRICAL DUPLEX RECEPTACLE	SL	– SLIDE OUTLET
	– EXISTING TO REMAIN	T	– TELEPHONE/ DATA
I	– INTERCOM	TV	– TELEVISION CABLE
J	– JUNCTION BOX	V	– VACCUUM OUTLET

PL–12 SEE A7 SERIES AND SPECIFICATIONS SECTION 09 06 00 SCHEDULE FOR FINISHES FOR MATERIAL COLOR

DESIGNER/ENGINEER DLL
CAD OPERATOR JG,TK,CK
QA/QC/CHECKER RDB

Revisions	Date
ISSUED FOR BID	02/28/2012
PRE–BID AMENDMENT	05/10/2012

DesignLevel
455 Arden Road Columbus, OH 43214 p. 614.267.6603
www.DesignLeveLArchitecture.com
planning interior design architecture

© Copyright 2012

STATE OF OHIO ROBERT D. BARGA 07459 REGISTERED ARCHITECT

Professional Seal

Revised By:
– – –

Drawing Title: INTERIOR ELEVATIONS
SCALE: AS NOTED

Approved: Project Manager: RANDI FIORINA

Approved: Service Chief: GARY ABREU

Project Title: OPEN MRI SITE PREP

Building Number: 335

Checked: DESIGNLEVEL

Drawn:

Location: 4100 WEST THIRD STREET DAYTON, OH 45428

Date: 02–28–2012

Project No. 552–CSI–101

Drawing No. A5-05

VAMC, DAYTON

Department of Veterans Affairs

VA FORM 08–6231, OCT 1978

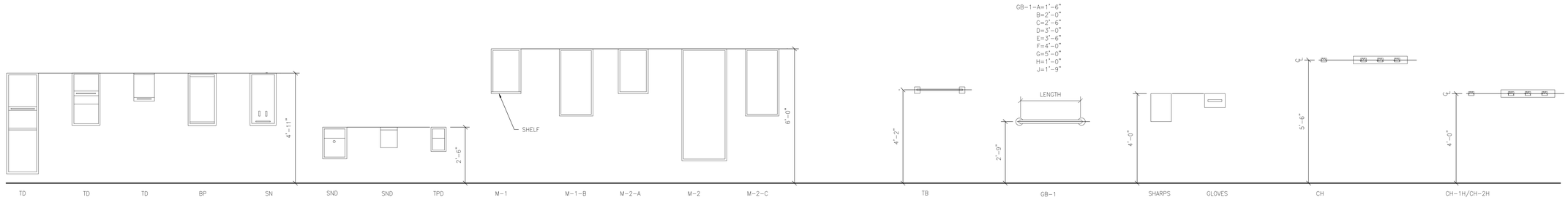

1 MISC. TOILET RM ACCESSORIES

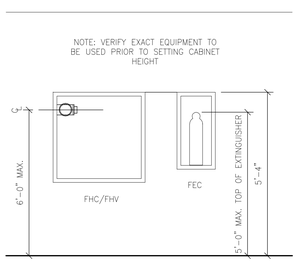

2 FHC/FEC/FVC

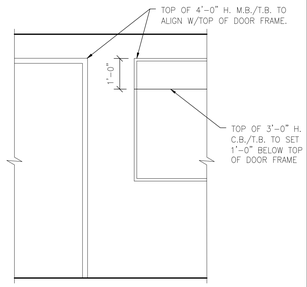

3 CHALKBOARD/ TACKBOARD/MARKERBOARD

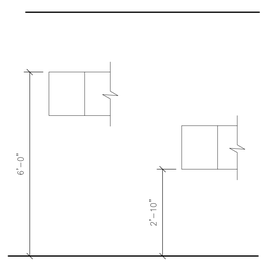

4 X-RAY VIEWERS

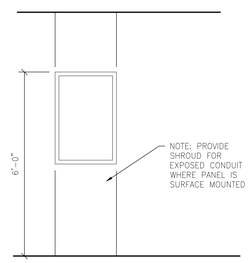

5 ELECTRIC PANEL

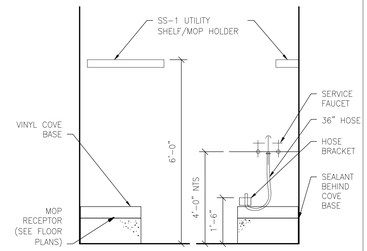

6 MOP BASIN

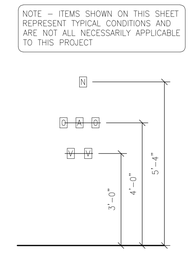

7 TYPICAL GASES

8 CLOCK

9 NOT USED

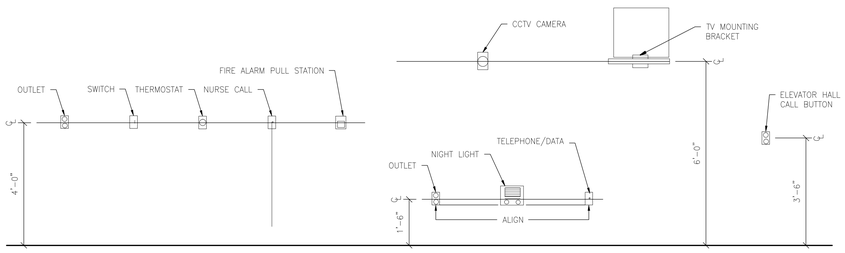

10 MISC. DEVICES

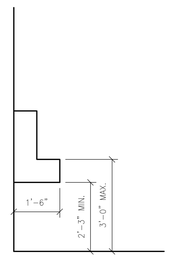

11 EWC./DF.

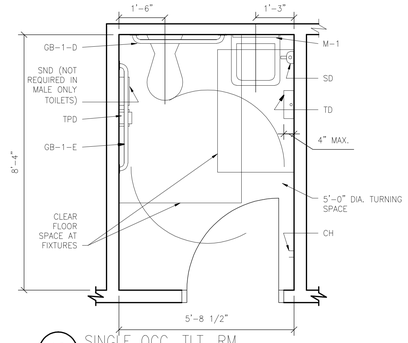

12 SINGLE OCC. TLT. RM.

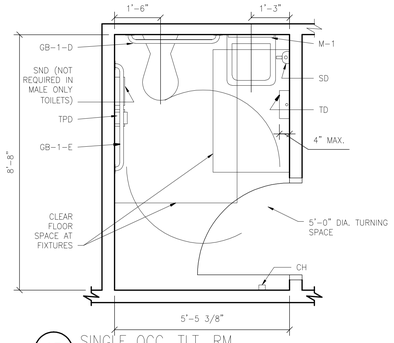

13 SINGLE OCC. TLT. RM.

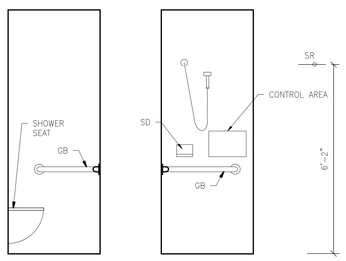

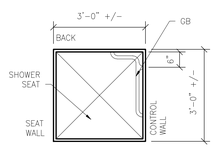

14 ADA COMPLIANT TRANSFER SHOWER

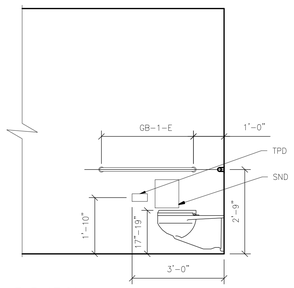

15 ELEVATION – SIDE VIEW – WATER CLOSET

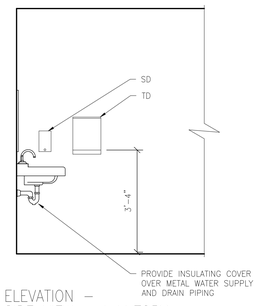

16 ELEVATION – SIDE VIEW – LAVATORY

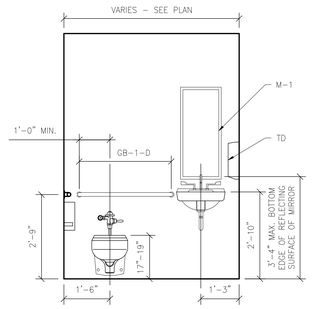

17 ELEVATION – WATER CLOSET

NOTE: SEE SPECIFICATION SECTION 10 28 00 FOR TOILET ACCESSORIES DESIGNATIONS

DESIGNER/ENGINEER DLL
CAD OPERATOR JG,TK,CK
QAQC/CHECKER RDB

Revisions	Date
ISSUED FOR BID	02/28/2012
PRE-BID AMENDMENT	05/10/2012

DesignLevel
455 Arden Road Columbus, OH 43214 p. 614.267.6603
www.DesignLevelArchitecture.com
planning interior design architecture

© Copyright 2012

STATE OF OHIO ROBERT D. BARGA 07459 REGISTERED ARCHITECT
Professional Seal

Revised By: – – –

Drawing Title: TYPICAL MOUNTING HEIGHTS
SCALE: AS NOTED

Project Title: OPEN MRI SITE PREP

Date: 02-28-2012
Project No. 552-CSI-101

Approved: Project Manager: RANDI FIORINA
Approved: Service Chief: GARY ABREU

Building Number: 335
Checked: DESIGNLEVEL
Drawn:

Location: 4100 WEST THIRD STREET DAYTON, OH 45428

Drawing No. A6-01

VAMC, DAYTON
Department of Veterans Affairs

VA FORM 08-6231, OCT 1978

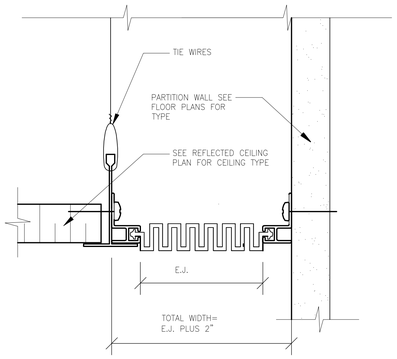

1 LAY-IN CEILING TO WALL EXPANSION JOINT (NON-RATED)
FULL SCALE

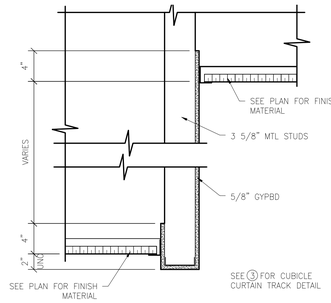

2 CEILING TRANSITION ACOUSTIC TILE TO ACOUSTIC TILE WITH HEADER
1 1/2"=1'-0"

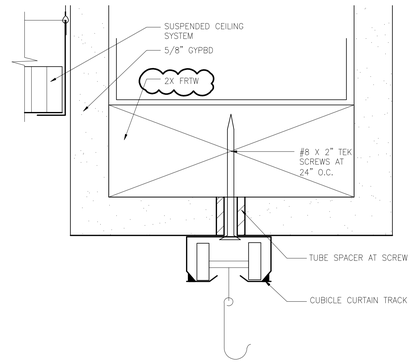

3 CCT TRACK ATTACHMENT
(SUSPENDED GYPBD) FULL SCALE

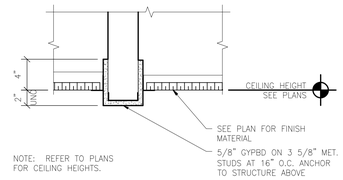

4 GYPSUM WALLBOARD HEADER DETAIL
1 1/2"=1'-0"

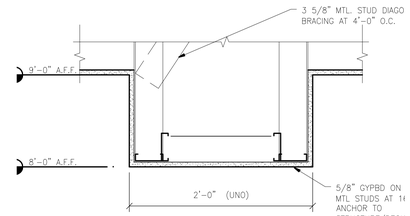

5 SOFFIT DETAIL
1 1/2"=1'-0"

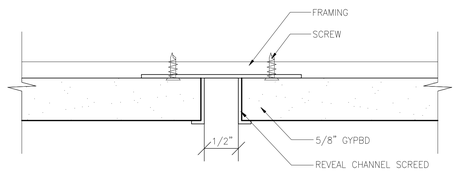

6 GYPSUM WALLBOARD REVEAL
FULL SCALE

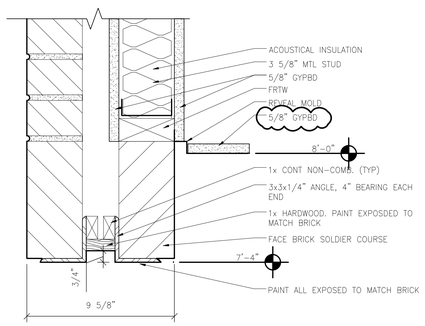

7 BRICK HEAD
3"=1'-0"

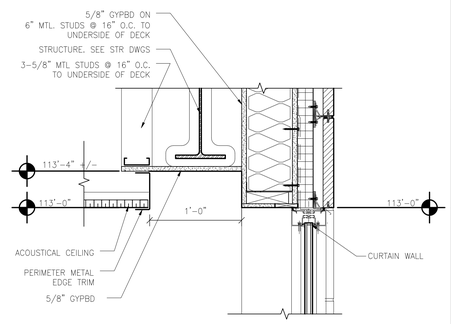

8 ACOUSTICAL CEILING DETAIL
1 1/2"=1'-0"

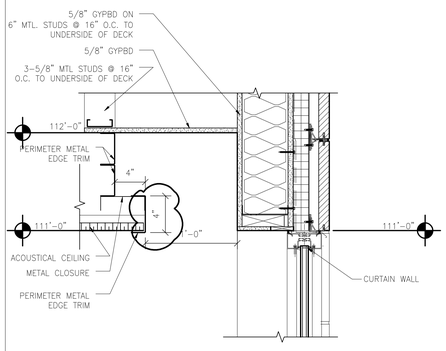

9 ACOUSTICAL CEILING DETAIL
1 1/2"=1'-0"

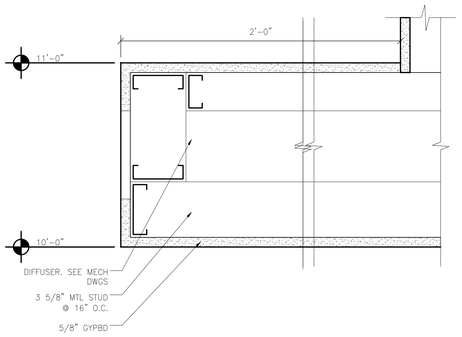

10 SOFFIT
WAITING/LOBBY 3"=1'-0"

DESIGNER/ENGINEER DLL
CAD OPERATOR JG,TK,CK
QAQC/CHECKER RDB

Revisions	Date
ISSUED FOR BID	02/28/2012
PRE-BID AMENDMENT	05/10/2012

DesignLevel
455 Arden Road Columbus, OH 43214 p. 614.267.6603
www.DesignLeveLArchitecture.com
planning interior design architecture

© Copyright 2012

STATE OF OHIO REGISTERED ARCHITECT ROBERT D. BARGA 07459
Professional Seal

Revised By:

Drawing Title: STANDARD CEILING DETAILS
SCALE: AS NOTED
Approved: Project Manager: RANDI FIORINA
Approved: Service Chief: GARY ABREU

Project Title: OPEN MRI SITE PREP
Building Number: 335
Checked: DESIGNLEVEL
Drawn:
Location: 4100 WEST THIRD STREET DAYTON, OH 45428

Date: 02-28-2012
Project No. 552-CSI-101
Drawing No. A6-02

VAMC, DAYTON
VA Department of Veterans Affairs

VA FORM 08-6231, OCT 1978

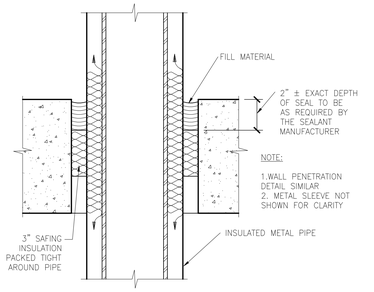

1 FLOOR PENETRATION– FIRESTOP INSUL'D. METAL PIPE– 1 1/2 ; 2 & 3 HR

SIM. U.L.DESIGN NO.: C–AJ–5001 3"=1'–0"

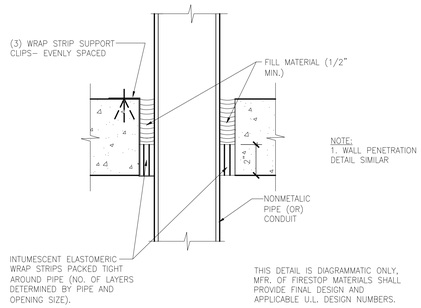

2 FLOOR PENETRATION – FIRESTOP NONMETALLIC PIPE OR CONDUIT – 2HR

SIM. U.L. SYSTEM DESIGN NO.: C–AJ –2002 3"=1'–0"

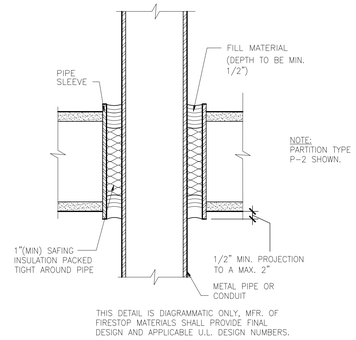

3 WALL PENETRATION– 1 HOUR/ 2 HOUR FIRE RESISTIVE PARTITION

SIM. U.L.SYSTEM W–L–1003 3"=1'–0"

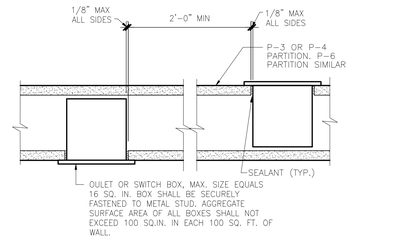

4 OUTLET BOXES IN FIRE RATED PARTITIONS

WALLBOARD PARTITIONS 3"=1'–0"

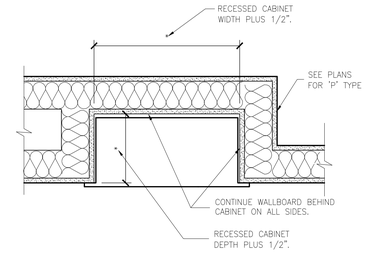

5 RECESSED CABINET IN A 1HR PARTITION

1 1/2"=1'–0"

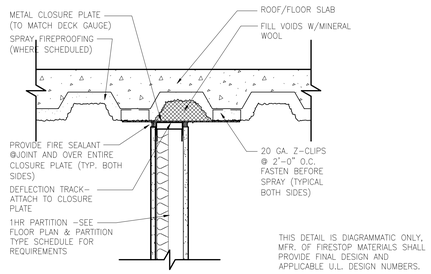

6 TYPICAL RATED WALL PARALLEL TO ROOF DECK: 1HR RATED

SIM TO JMI/PHV 60–01 1 1/2" = 1'–0"

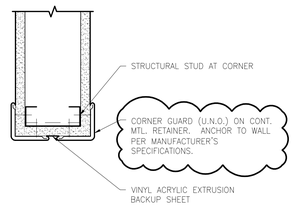

7 CORNER GUARD (CG)

3" = 1'–0"

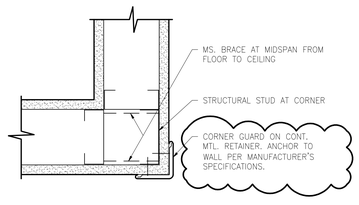

8 CORNER GUARD (CG)

3"=1'–0"

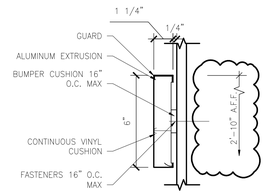

9 CRASH RAIL

3"=1'–0"

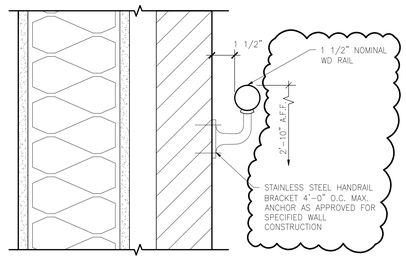

10 HANDRAIL

3"=1'–0"

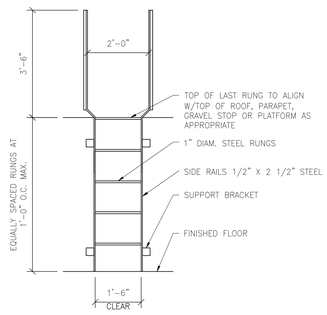

11 METAL LADDER

1/2"=1'–0"

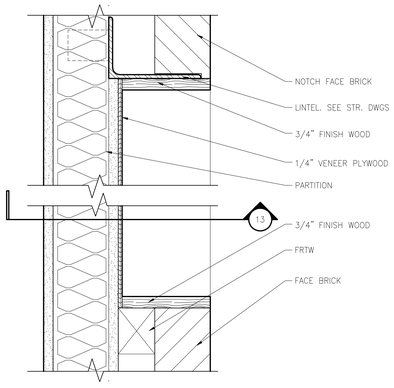

12 SECTION DETAIL

3" = 1'–0"

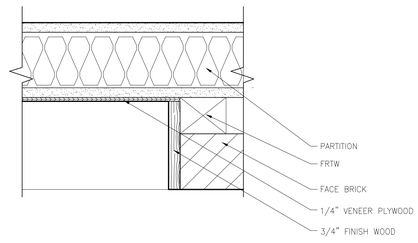

13 JAMB DETAIL

3" = 1'–0"

DESIGNER/ENGINEER DLL
CAD OPERATOR JG,TK,CK
QA/QC/CHECKER RDB

Revisions	Date
ISSUED FOR BID	02/28/2012
PRE–BID AMENDMENT	05/10/2012

DesignLevel
455 Arden Road Columbus, OH 43214 p. 614.267.6603
www.DesignLeveLarchitecture.com
planning interior design architecture

© Copyright 2012

STATE OF OHIO ROBERT D. BARGA 07459 REGISTERED ARCHITECT
Professional Seal

Revised By:
– – –

Drawing Title: INTERIOR DETAILS
SCALE: AS NOTED

Project Title: OPEN MRI SITE PREP

Date: 02–28–2012
Project No. 552–CSI–101

Approved: Project Manager: RANDI FIORINA
Building Number: 335
Checked: DESIGNLEVEL
Drawn:
Approved: Service Chief: GARY ABREU
Location: 4100 WEST THIRD STREET DAYTON, OH 45428

Drawing No. A6-03

VAMC. DAYTON
VA Department of Veterans Affairs

VA FORM 08–6231, OCT 1978