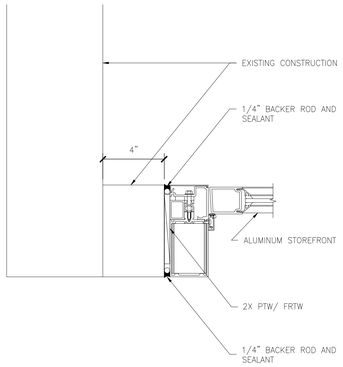

1 PLAN DETAIL
EXISTING-NEW WALL CONDITION 3" = 1'-0"

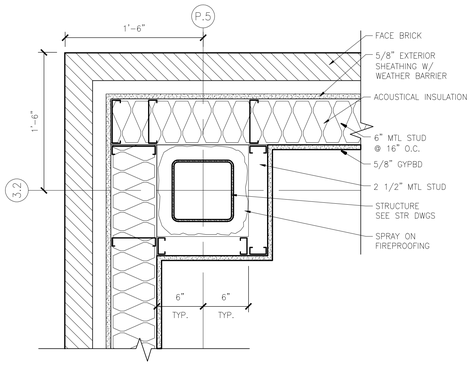

2 PLAN DETAIL
AT P.5 AND 3.2 1 1/2"=1'-0"

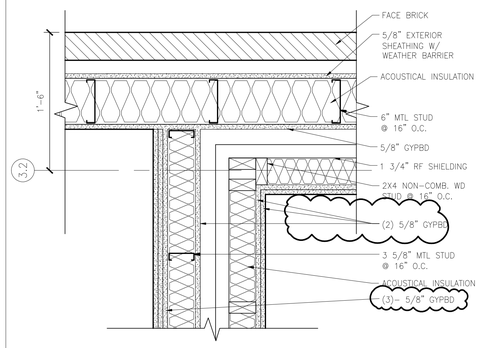

3 PLAN DETAIL
BRICK OUTSIDE CORNER AT MRI ROOM 1 1/2"=1'-0"

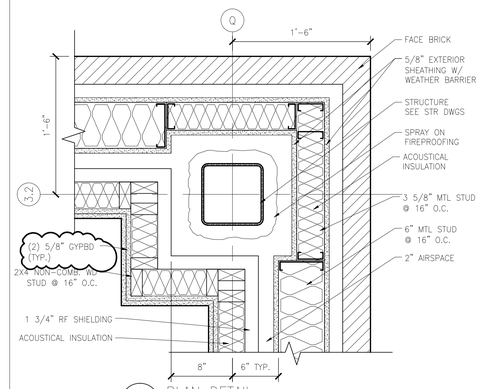

4 PLAN DETAIL
AT Q AND 3.2 1 1/2"=1'-0"

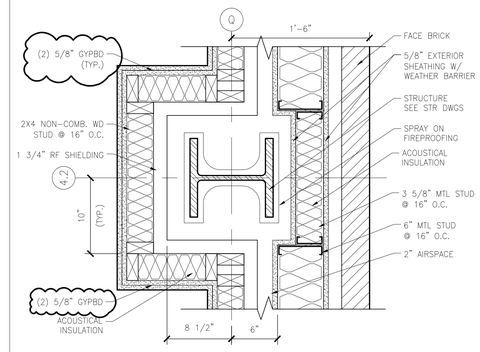

5 PLAN DETAIL
AT Q AND 4.2 1 1/2"=1'-0"

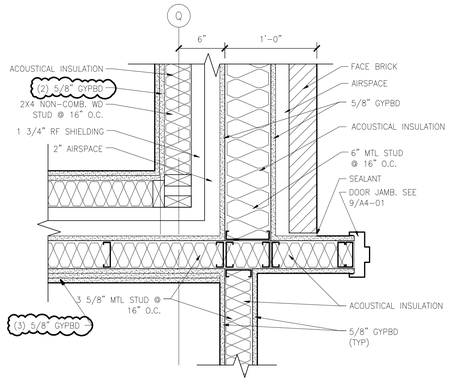

6 PLAN DETAIL
BRICK OUTSIDE CORNER AT MRI ROOM 1 1/2"=1'-0"

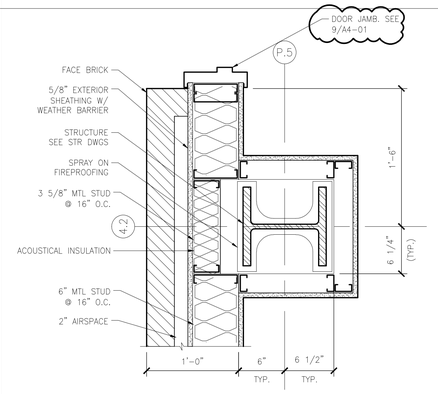

7 PLAN DETAIL
AT P.5 AND 4.2 1 1/2"=1'-0"

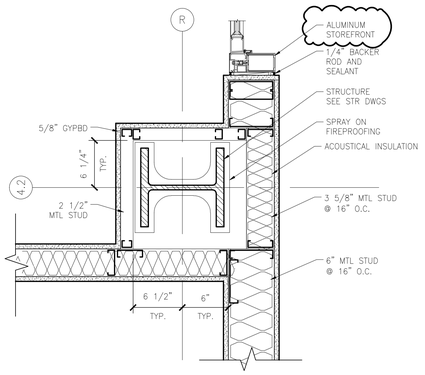

8 PLAN DETAIL
AT R AND 4.2 1 1/2"=1'-0"

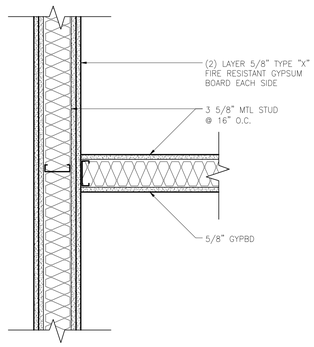

9 PLAN DETAIL
1 1/2"=1'-0"

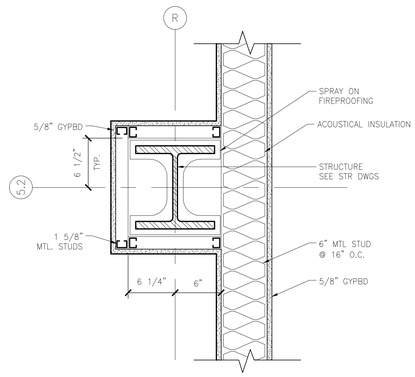

10 PLAN DETAIL
AT R AND 5.2 1 1/2"=1'-0"

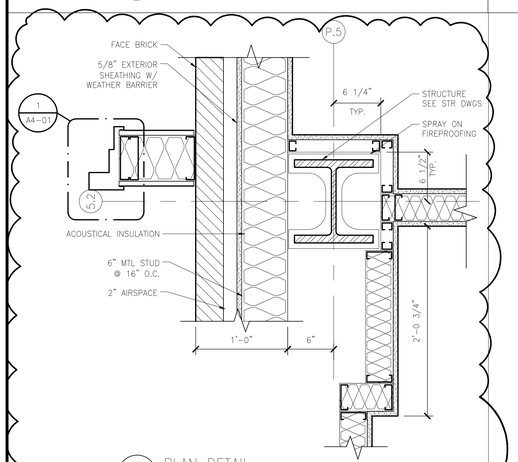

11 PLAN DETAIL
AT P.5 and 5.2 1 1/2"=1'-0"

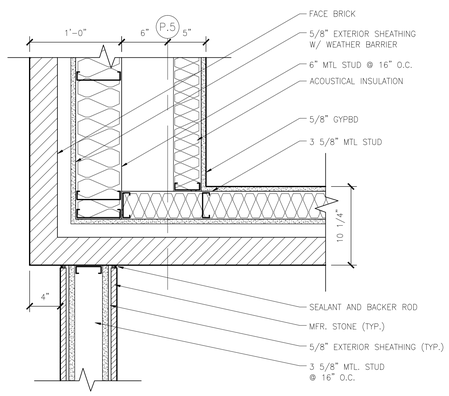

12 PLAN DETAIL
LOBBY/CORRIDOR 1 1/2"=1'-0"

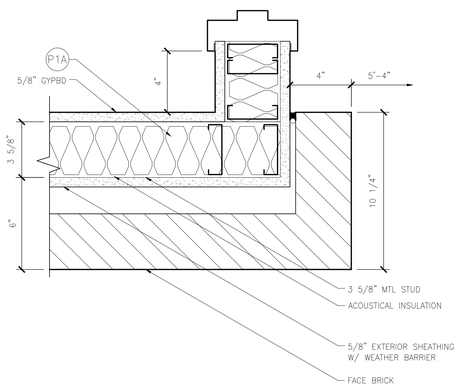

13 PLAN DETAIL
BRICK WALL AT LOBBY/WAITING 3" = 1'-0"

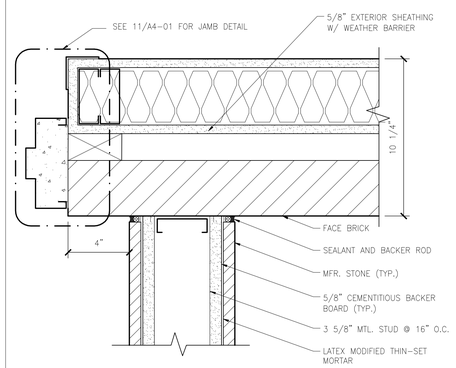

14 PLAN DETAIL
BRICK-STONE WALL AT RECEPTION 3" = 1'-0"

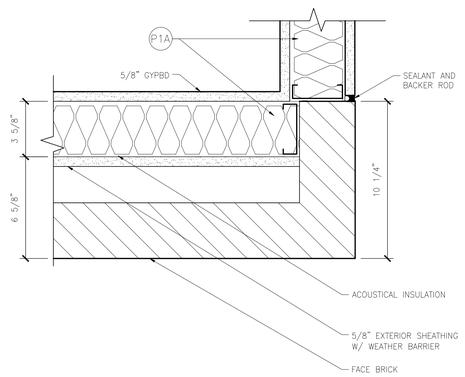

15 PLAN DETAIL
3" = 1'-0"

DESIGNER/ENGINEER DLL
CAD OPERATOR DLL/CJK
QA/QC CHECKER RDF

Revisions	Date
ISSUED FOR BID	02/28/2012
PRE-BID AMENDMENT	05/10/2012

DesignLevel
455 Arden Road Columbus, OH 43214 p. 614.267.6603
www.DesignLeveLArchitecture.com
planning interior design architecture

© Copyright 2012

STATE OF OHIO REGISTERED ARCHITECT ROBERT D. BARGA 07459
Professional Seal

Revised By:

Drawing Title: INTERIOR DETAILS
SCALE: AS NOTED

Project Title: OPEN MRI SITE PREP

Date: 02-28-2012
Project No. 552-CSI-101

Approved: Project Manager: RANDI FIORINA
Building Number: 335
Checked: DESIGNLEVEL
Drawn:
Approved: Service Chief: GARY ABREU
Location: 4100 WEST THIRD STREET DAYTON, OH 45428

Drawing No. A6-04

VAMC. DAYTON
VA Department of Veterans Affairs

VA FORM 08-6231, OCT 1978

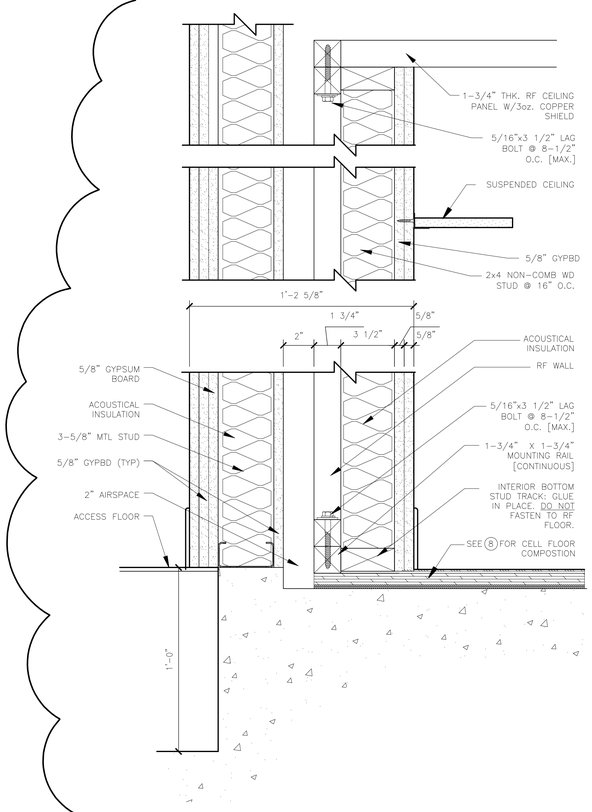

1 WALL SECTION 3"=1'-0"

NOTE: COORDINATE ALL REQUIREMENTS WITH SELECTED MRI VENDOR

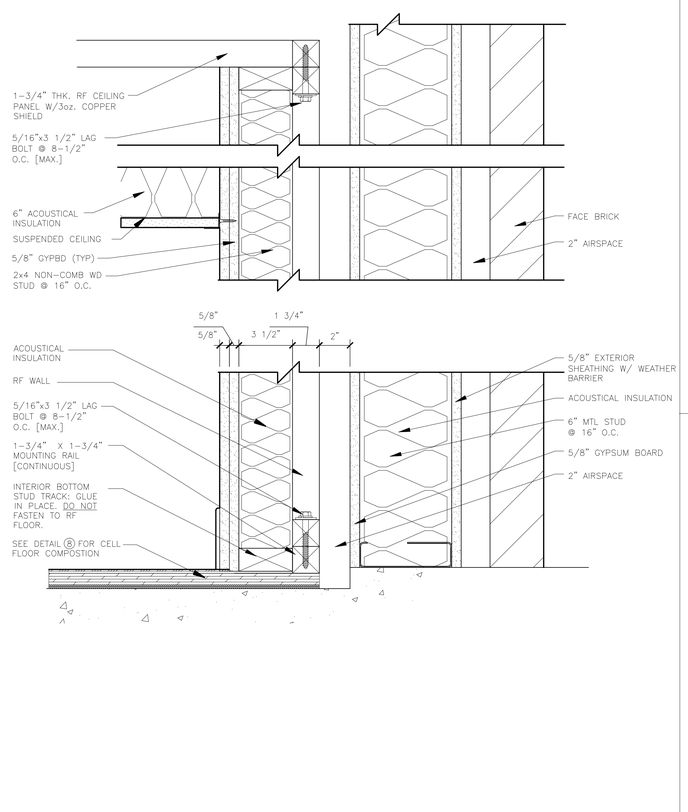

2 WALL SECTION 3"=1'-0"

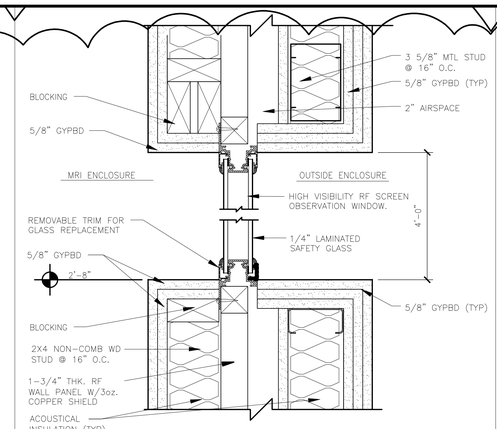

3 RF OBSERVATION WINDOW
HEADER/SILL 3"=1'-0"

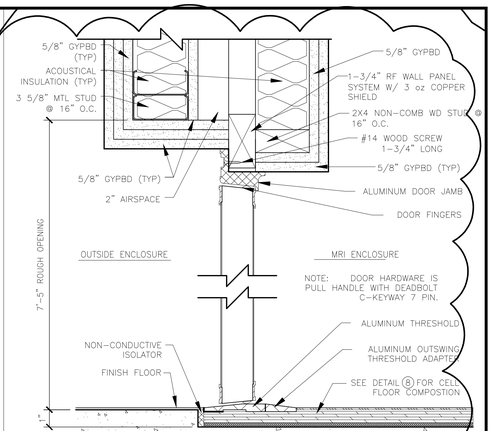

4 DOOR SECTION
AT MRI ROOM 3"=1'-0"

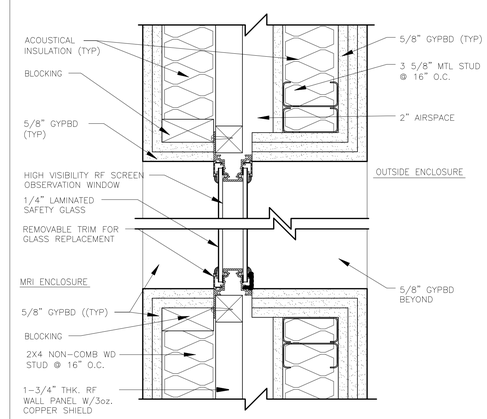

5 RF OBSERVATION WINDOW
JAMB 3"=1'-0"

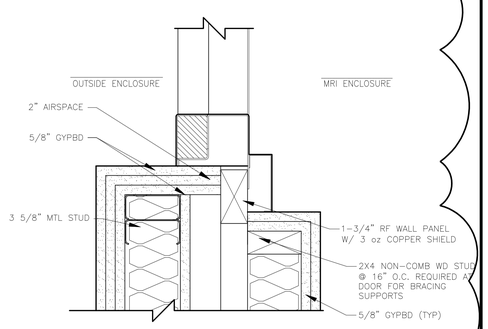

6 DOOR JAMB
AT MRI ROOM 3"=1'-0"

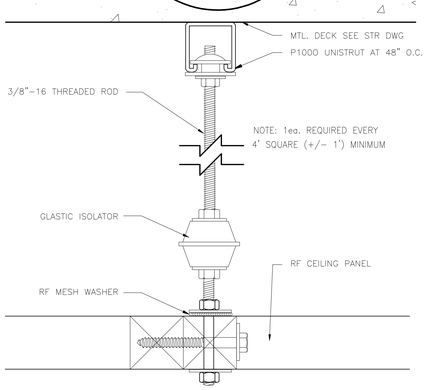

7 RF CEILING SUPPORT
HALF SIZE

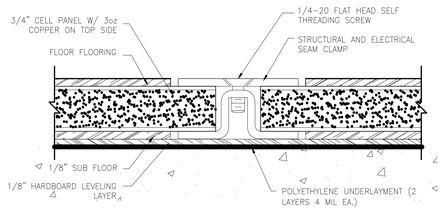

8 RF FLOOR DETAIL
FULL SIZE

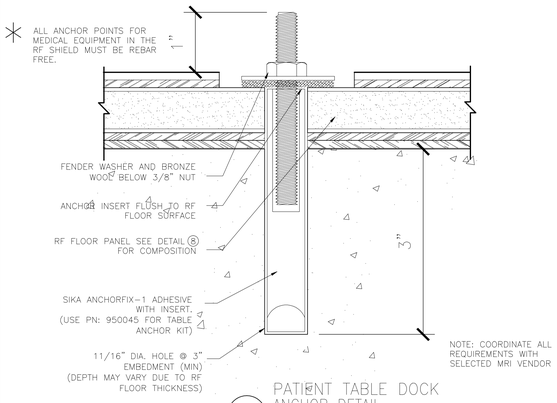

9 PATIENT TABLE DOCK ANCHOR DETAIL
FULL SIZE

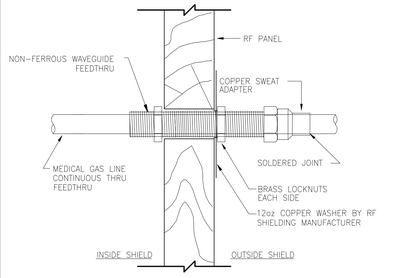

10 MEDGAS PENETRATION DETAIL
FULL SIZE

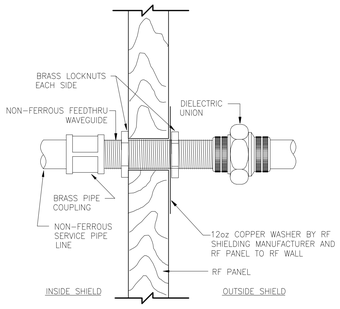

11 DIELECTRIC WAVEGUIDE DETAIL
FULL SIZE

DESIGNER/ENGINEER DLL
CAD OPERATOR JD,TK,CK
QA/QC/CHECKER RDB

Revisions	Date
ISSUED FOR BID	02/28/2012
PRE-BID AMENDMENT	05/10/2012

DesignLevel
455 Arden Road Columbus, OH 43214 p. 614.267.6603
www.DesignLeveLArchitecture.com
planning interior design architecture

© Copyright 2012

STATE OF OHIO REGISTERED ARCHITECT ROBERT D. BARGA 07459
Professional Seal

Revised By: ---

Drawing Title: INTERIOR DETAILS
SCALE: AS NOTED

Project Title: OPEN MRI SITE PREP

Date: 02-28-2012
Project No. 552-CSI-101

Approved: Project Manager: RANDI FIORINA
Building Number: 335
Checked: DESIGNLEVEL
Drawn:

Approved: Service Chief: GARY ABREU
Location: 4100 WEST THIRD STREET DAYTON, OH 45428

Drawing No. A6-05

VAMC. DAYTON
VA Department of Veterans Affairs

VA FORM 08-6231, OCT 1978

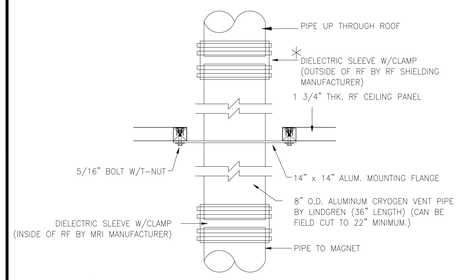

✳ VENTGLASS AND CLAMPS PROVIDED PER THE DIRECTION OF THE MRI MANUFACTURER. MATERIALS ARE TO BE INSTALLED BY RESPONSIBLE CONTRACTOR (I.E. MECHANICAL CONTRACTOR) THE RF SHIELDING MANUFACTURER HAS NOT ENGINEERED OR TESTED THE EFFECTIVENESS OF THE MECHANICAL CONNECTION OF THE MATERIALS BEING PROVIDED AND ASSUMES NO LIABILITY FOR THE PERFORMANCE OF THIS MATERIAL.

1 CRYOGEN VENT DETAIL
1 1/2"=1'-0"

2 NOT USED
1 1/2"=1'-0"

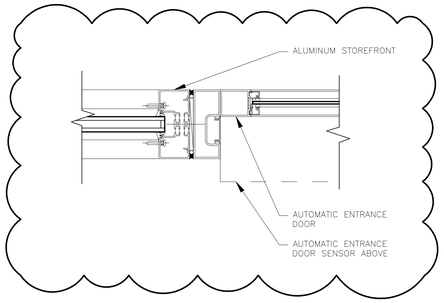

3 PLAN DETAIL
3" = 1'-0"

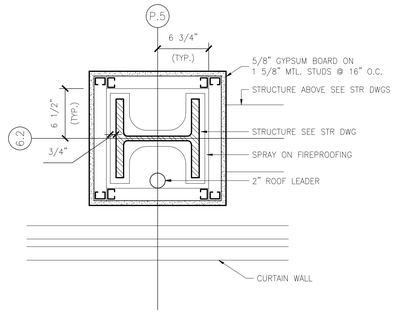

4 PLAN DETAIL
COLUMN WRAP
1 1/2"=1'-0"

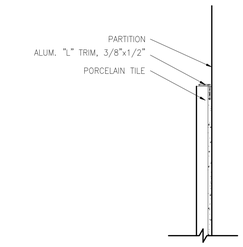

5 PORCELAIN TILE TRIM DETAIL
HALF SIZE

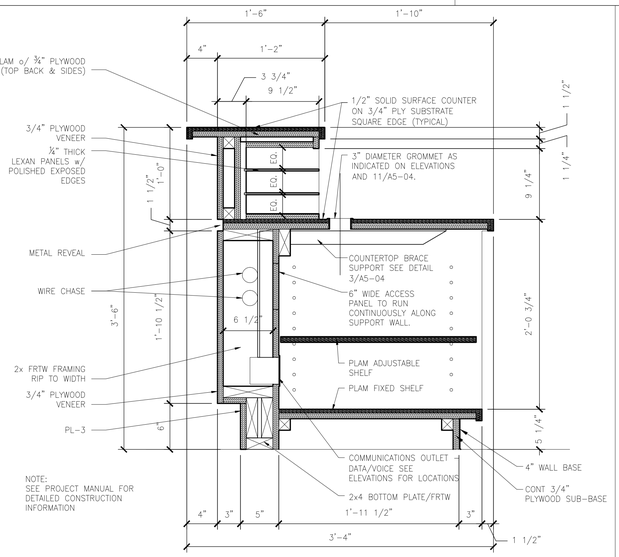

NOTE:
SEE PROJECT MANUAL FOR DETAILED CONSTRUCTION INFORMATION

6 RECEPTION DESK
1 1/2"=1'-0"

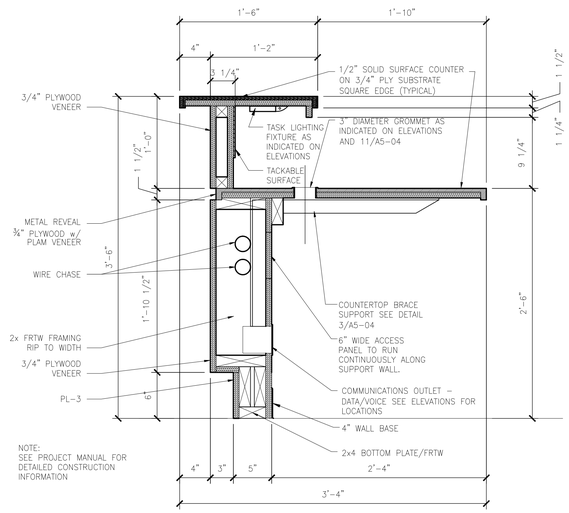

NOTE:
SEE PROJECT MANUAL FOR DETAILED CONSTRUCTION INFORMATION

7 RECEPTION DESK
1 1/2"=1'-0"

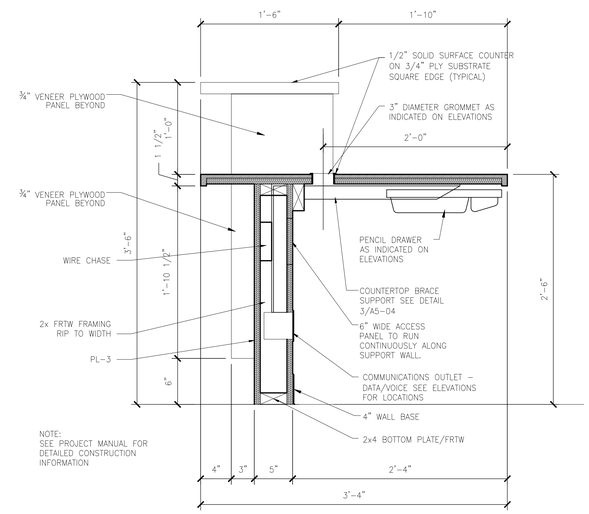

NOTE:
SEE PROJECT MANUAL FOR DETAILED CONSTRUCTION INFORMATION

8 RECEPTION DESK
1 1/2"=1'-0"

DESIGNER/ENGINEER DLL
CAD OPERATOR JG,TK,CK
QA/QC/CHECKER RDB

Revisions	Date
ISSUED FOR BID	02/28/2012
PRE-BID AMENDMENT	05/10/2012

DesignLevel
455 Arden Road Columbus, OH 43214 p. 614.267.6603
www.DesignLeveLarchitecture.com
planning interior design architecture

© Copyright 2012

STATE OF OHIO ROBERT D. BARGA 07459 REGISTERED ARCHITECT
Professional Seal

Revised By:
– – –

Drawing Title: INTERIOR DETAILS
SCALE: AS NOTED

Project Title: OPEN MRI SITE PREP

Date: 02-28-2012
Project No. 552-CSI-101

Approved: Project Manager: RANDI FIORINA
Building Number: 335
Checked: DESIGNLEVEL
Drawn:

Approved: Service Chief: GARY ABREU
Location: 4100 WEST THIRD STREET DAYTON, OH 45428

Drawing No. A6-06

VAMC, DAYTON
VA Department of Veterans Affairs

VA FORM 08-6231, OCT 1978

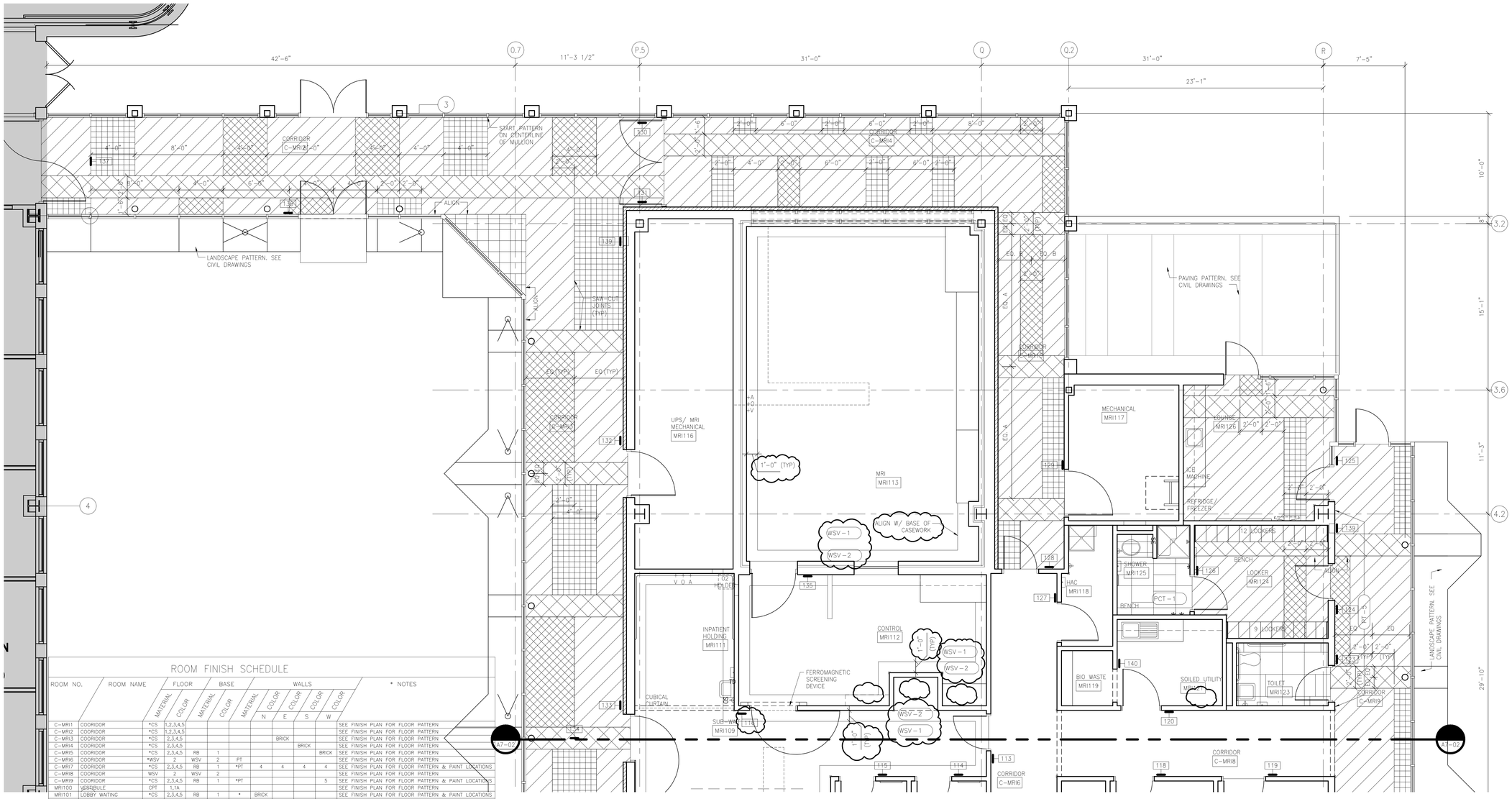

SIGNAGE SCHEDULE

PLAN. NO.	SIGN. DESIGNATION	BACKGROUND COLOR	TEXT COLOR	NOTES
100	–	–	–	NOT USED
101	N.15.01	B7	T5	UP ARROW+"MRI LOBBY" SEE KDP-01 FOR LOCATION
102	–	–	–	NOT USED
103	N.15.01	B7	T5	SIDE1: UP ARROW+"GI DEPARTMENT" SIDE2: UP ARROW+"MRI LOBBY"
104	N.18.01	–	T1	REFER TO IN.01.06 FOR TEXT AND SIZE
105	N.08.04	B7	T5	
106	N.03.01 N.09.03	B11 B11	T5 T5	
107	N.03.01 N.09.03	B11 B11	T5 T5	
108	N.03.01	B11	T5	
109	N.03.01 N.04.02A	B11 B11	T5 T5	
110	N.03.01 N.04.01A	B11 B11	T5 T5	
111	N.03.01 N.07.01A	B11 B11	T5 T5	
112	N.03.01 N.04.02A	B11 B11	T5 T5	
113	N.03.01 N.04.02A	B11 B11	T5 T5	
114	N.03.01 N.04.02A	B11 B11	T5 T5	
115	N.03.01 N.04.02A	B11 B11	T5 T5	
116	N.03.01 N.04.02A	B11 B11	T5 T5	
117	N.03.01 N.09.03	B11 B11	T5 T5	
118	N.03.01 N.04.02A	B11 B11	T5 T5	
119	N.03.01 N.04.02A	B11 B11	T5 T5	
120	N.03.01 N.04.02A	B11 B11	T5 T5	
121	N.03.01 N.04.02A	B11 B11	T5 T5	
122	N.03.01 N.04.02A	B11 B11	T5 T5	
123	N.03.01 N.09.03	B11 B11	T5 T5	
124	N.03.01 N.04.02A	B11 B11	T5 T5	
125	N.18.01	–	T1	REFER TO IN.01.06 FOR TEXT SIZE
126	N.03.01 N.04.02A	B11 B11	T5 T5	
127	N.03.01 N.04.02A	B11 B11	T5 T5	
128	N.03.01 N.04.02A	B11 B11	T5 T5	
129	N.03.01 N.04.02A	B11 B11	T5 T5	
130	N.08.02	B7	T5	LOCATE ON C-MR12 SIDE OF DOOR
131	N.08.02	B7	T5	LOCATE ON C-MR12 SIDE OF DOOR
132	N.03.01 N.04.02A	B11 B11	T5 T5	
133	N.03.01 N.04.02A	B11 B11	T5 T5	
134	N.15.01	B7	T5	UP ARROW+"MRI LOBBY"
135	N.03.01 N.04.02A	B11 B11	T5 T5	
136	N.18.01	–	T1	REFER TO IN.01.06 FOR TEXT AND SIZE
137	N.15.01	B7	T5	UP ARROW+"MAIN HOSPITAL"
138	N.15.01	B7	T5	UP ARROW+"MRI LOBBY" SEE KDP-01 FOR LOCATION
139	N.01.02	B3	T1	4 LOCATIONS
140	N.01.22	B8	T4	
141	N.04.02	B11	T5	"1B CONSTRUCTION" 2 LOCATIONS SEE KDP-01
142	N.18.01	–	T1	COORDINATE TEXT WITH COTR. REFER TO SPECIFICATIONS FOR ARROW SIZE. 2 LOCATIONS SEE 7/A5-03
143	N.18.01		T1	BUSINESS HOURS. COORDINATE TEXT WITH COTR. REFER TO IN.02.04 FOR TEXT SIZE AND INFORMATION. SEE 7/A5-03 FOR ADDITIONAL INFORMATION.
144	N.18.01	–	T1	REFER TO SPECIFICATIONS FOR TEXT AND SIZE. SEE 7/A5-03 FOR ADDITIONAL INFORMATION.
145	N.02.03	B11	T5	CONFIRM WITH COTR. COORDINATE WITH COTR.
146	N.02.07	–	–	CONFIRM WITH COTR. FRAME-P2. COORDINATE WITH COTR.
147	N.02.08	–	–	CONFIRM WITH COTR. FRAME-P2. COORDINATE WITH COTR.

NOTE:
- PROVIDE ALL OSHA AND OTHER REGULATORY REQUIRED SIGNS
- COORDINATE SIGNAGE TEXT AND FINAL LOCATIONS WITH COTR

ROOM FINISH SCHEDULE

ROOM NO.	ROOM NAME	FLOOR MATERIAL	FLOOR COLOR	BASE MATERIAL	BASE COLOR	WALLS MATERIAL	WALLS COLOR N	WALLS COLOR E	WALLS COLOR S	WALLS COLOR W	* NOTES
C-MRI1	COORIDOR	*CS	1,2,3,4,5								SEE FINISH PLAN FOR FLOOR PATTERN
C-MRI2	COORIDOR	*CS	1,2,3,4,5								SEE FINISH PLAN FOR FLOOR PATTERN
C-MRI3	COORIDOR	*CS	2,3,4,5				BRICK				SEE FINISH PLAN FOR FLOOR PATTERN
C-MRI4	COORIDOR	*CS	2,3,4,5					BRICK			SEE FINISH PLAN FOR FLOOR PATTERN
C-MRI5	COORIDOR	*CS	2,3,4,5	RB	1					BRICK	SEE FINISH PLAN FOR FLOOR PATTERN
C-MRI6	COORIDOR	*WSV	2	WSV	2	PT					SEE FINISH PLAN FOR FLOOR PATTERN
C-MRI7	COORIDOR	*CS	2,3,4,5	RB	1	*PT	4	4	4	4	SEE FINISH PLAN FOR FLOOR PATTERN & PAINT LOCATIONS
C-MRI8	COORIDOR	WSV	2	WSV	2						SEE FINISH PLAN FOR FLOOR PATTERN
C-MRI9	COORIDOR	*CS	2,3,4,5	RB	1	*PT	–			5	SEE FINISH PLAN FOR FLOOR PATTERN & PAINT LOCATIONS
MRI100	VESTIBULE	CPT	1,1A								SEE FINISH PLAN FOR FLOOR PATTERN
MRI101	LOBBY WAITING	*CS	2,3,4,5	RB	1	*	BRICK				SEE FINISH PLAN FOR FLOOR PATTERN & PAINT LOCATIONS
MRI102	RECEPTION	CPT	2	RB	1	*	BRICK				
MRI103	STAFF WORK	CPT	2	RB	1	PT	4				
MRI104	VIEW CONSULT	CPT	2	RB	1	PT		5			
MRI105	ELECTRICAL	EPY	1	RB	1	PT					
MRI106	DATA	EPY	1	RB	1	PT					SEE NOTE 3 BELOW
MRI107	TOILET	PCT	1	PCT	1	PCT/PT	PCT/PT	PCT/PT	PCT/PT	PCT/PT	PCT-1, PT-6. SEE ELEVATIONS FOR PATTERN
MRI108	TOILET	PCT	1	PCT	1	PCT/PT	PCT/PT	PCT/PT	PCT/PT	PCT/PT	PCT-1, PT-6. SEE ELEVATIONS FOR PATTERN
MRI109	SUB-WAITING	WSV	1/2	WSV	2	*PT		5			SEE FINISH PLAN FOR ACCENT PAINT LOCATIONS
MRI110	TOILET	PCT	1	PCT	1	*PCT/PT	PCT/PT	PCT/PT	PCT/PT	PCT/PT	PCT-1, PT-6. SEE ELEVATIONS FOR PATTERN
MRI111	INPATIENT HOLDING	WSV	1/2	WSV	2	PT		5			
MRI112	MRI CONTROL	WSV	1/2	WSV	2	PT		4			SEE FINISH PLAN AND ELEVATIONS
MRI113	MRI	WSV	1/2	WSV	2	*PT	3/5	3/5	3/5	3/5	SEE FINISH PLAN AND ELEVATIONS
MRI114	DRESSING	CPT	2	RB	1	PT	4	4	4	4	SEE FINISH PLAN AND ELEVATIONS
MRI115	DRESSING	CPT	2	RB	1	PT	4	4	4	4	SEE FINISH PLAN AND ELEVATIONS
MRI116	UPS/ MRI MECHANICAL	AF	–	RB	1	PT					
MRI117	MECHANICAL	CSL		RB	1	PT					
MRI118	HAC	PCT	1	PCT	1	PCT/PT	PCT/PT	PCT/PT	PCT/PT	PCT/PT	ALL WALLS, PCT-1 (24"X24") UP TO 4'-0", PT-1
MRI119	BIO WASTE	WSV	2	WSV	2	PT					
MRI120	CLEAN SUPPLY	WSV	2	WSV	2	PT					
MRI121	SOILED UTILITY	WSV	2	WSV	2	PT					
MRI122	EQUIPMENT	CSL		RB	1	PT					SEE FINISH PLAN FOR FLOOR PATTERN
MRI123	STAFF TOILET	PCT	1	PCT	1	PCT/PT	PCT/PT	PCT/PT	PCT/PT	PCT/PT	
MRI124	STAFF LOCKERS	*CS	3,4,5	RB	1	PT	4	4	4	4	SEE FINISH PLAN FOR FLOOR PATTERN
MRI125	SHOWER	PCT	1	PCT	1	PCT/PT	PCT/PT	PCT/PT	PCT/PT	PCT/PT	
MRI126	STAFF LOUNGE	*CS	2,3,4,5	RB	1	PT				2	SEE FINISH PLAN FOR FLOOR PATTERN
MRI127	STAFF RADIOLOGIST	CPT	2	RB	1	PT	2	2	2	2	PAINT FINISH: MATTE
MRI128	PROF NON-PHYSICIAN	CPT	2	RB	1	PT				4	

FINISH MATERIAL NOTES

1. ALL WALLS SHALL BE PT-1, UNO.
2. PAINT COUNTER TOP BRACES TO MATCH WALL.
3. PROVIDE FULL HEIGHT PAINTED 3/4" AC GRADE FIRE RETARDANT PLYWOOD OVER TYPE "X" GYPSUM BOARD ALL WALLS.

REFER TO SPECIFICATIONS 09 06 00 SCHEDULE FOR FINISHES FOR ABBREVIATIONS.

STAINED CONCRETE NOTES

CS-1
CS-2
CS-3
CS-4
CS-5

1 PARTIAL FLOOR FINISH PLAN

NORTH HALF 1/4"=1'-0"

DESIGNER/ENGINEER DLL
CAD OPERATOR JCJ,TK,CK
QA/QC/CHECKER RDB

Revisions	Date
ISSUED FOR BID	02/28/2012
ADDENDUM 1	04/24/2012
PRE-BID AMENDMENT	05/10/2012

DesignLevel
455 Arden Road Columbus, OH 43214 p. 614.267.6603
www.DesignLeveLarchitecture.com
planning interior design architecture

© Copyright 2012

STATE OF OHIO ROBERT BARGA 07459 REGISTERED ARCHITECT
Professional Seal

Revised By: ---

Drawing Title: PARTIAL FLOOR FINISH PLAN
SCALE: 1/4"=1'-0"

Project Title: OPEN MRI SITE PREP

Date: 02-28-2012
Project No. 552-CSI-101

Approved: Project Manager: RANDI FIORINA
Approved: Service Chief: GARY ABREU

Building Number: 335
Checked: DESIGNLEVEL
Drawn:
Location: 4100 WEST THIRD STREET DAYTON, OH 45428

Drawing No. A7-01

VAMC, DAYTON
Department of Veterans Affairs

VA FORM 08-6231, OCT 1978

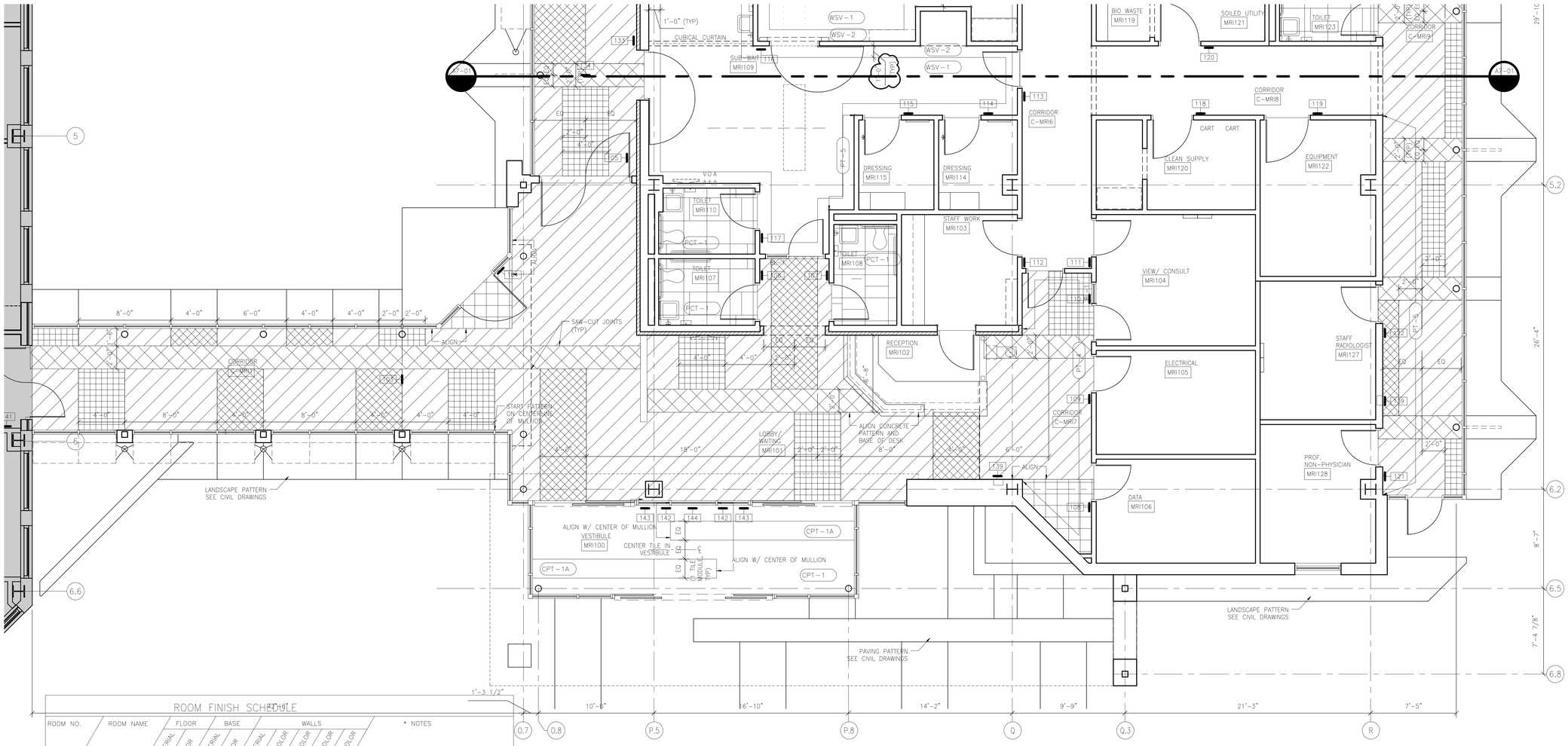

1 PARTIAL FLOOR FINISH PLAN
SOUTH HALF 1/4"=1'-0"

ROOM FINISH SCHEDULE

ROOM NO.	ROOM NAME	FLOOR MATERIAL	FLOOR COLOR	BASE MATERIAL	BASE COLOR	WALLS MATERIAL	WALLS COLOR N	WALLS COLOR E	WALLS COLOR S	WALLS COLOR W	* NOTES
C-MRI1	COORIDOR	*CS	1,2,3,4,5								SEE FINISH PLAN FOR FLOOR PATTERN
C-MRI2	COORIDOR	*CS	1,2,3,4,5								SEE FINISH PLAN FOR FLOOR PATTERN
C-MRI3	COORIDOR	*CS	2,3,4,5					BRICK			SEE FINISH PLAN FOR FLOOR PATTERN
C-MRI4	COORIDOR	*CS	2,3,4,5						BRICK		SEE FINISH PLAN FOR FLOOR PATTERN
C-MRI5	COORIDOR	*CS	2,3,4,5	RB	1					BRICK	SEE FINISH PLAN FOR FLOOR PATTERN
C-MRI6	COORIDOR	*WSV	2	WSV	2	PT					SEE FINISH PLAN FOR FLOOR PATTERN
C-MRI7	COORIDOR	*CS	2,3,4,5	RB	1	*PT	4	4	4	4	SEE FINISH PLAN FOR FLOOR PATTERN & PAINT LOCATIONS
C-MRI8	COORIDOR	WSV	2	WSV	2						SEE FINISH PLAN FOR FLOOR PATTERN
C-MRI9	COORIDOR	*CS	2,3,4,5	RB	1	*PT				5	SEE FINISH PLAN FOR FLOOR PATTERN & PAINT LOCATIONS
MRI100	VESTIBULE	CPT	1,1A								SEE FINISH PLAN FOR FLOOR PATTERN
MRI101	LOBBY WAITING	*CS	2,3,4,5	RB	1	*	BRICK				SEE FINISH PLAN FOR FLOOR PATTERN & PAINT LOCATIONS
MRI102	RECEPTION	CPT	2	RB	1	*	BRICK				
MRI103	STAFF WORK	CPT	2	RB	1	PT	4				
MRI104	VIEW CONSULT	CPT	2	RB	1	PT		5			
MRI105	ELECTRICAL	EPY	1	RB	1	PT					
MRI106	DATA	EPY	1	RB	1	PT					SEE NOTE 3 BELOW
MRI107	TOILET	PCT	1	PCT	1	PCT/PT	PCT/PT	PCT/PT	PCT/PT	PCT/PT	PCT-1, PT-6. SEE ELEVATIONS FOR PATTERN
MRI108	TOILET	PCT	1	PCT	1	PCT/PT	PCT/PT	PCT/PT	PCT/PT	PCT/PT	PCT-1, PT-6. SEE ELEVATIONS FOR PATTERN
MRI109	SUB-WAITING	WSV	1/2	WSV	2	*PT		5			SEE FINISH PLAN FOR ACCENT PAINT LOCATIONS
MRI110	TOILET	PCT	1	PCT	1	*PCT/PT	PCT/PT	PCT/PT	PCT/PT	PCT/PT	PCT-1, PT-6. SEE ELEVATIONS FOR PATTERN
MRI111	INPATIENT HOLDING	WSV	1/2	WSV	2	PT		5			
MRI112	MRI CONTROL	WSV	1/2	WSV	2	PT		4			SEE FINISH PLAN AND ELEVATIONS
MRI113	MRI	WSV	1/2	WSV	2	*PT	3/5	3/5	3/5	3/5	SEE FINISH PLAN AND ELEVATIONS
MRI114	DRESSING	CPT	2	RB	1	PT	4	4	4	4	SEE FINISH PLAN AND ELEVATIONS
MRI115	DRESSING	CPT	2	RB	1	PT	4	4	4	4	SEE FINISH PLAN AND ELEVATIONS
MRI116	UPS/ MRI MECHANICAL	AF	–	RB	1	PT					
MRI117	MECHANICAL	CSL		RB	1	PT					
MRI118	HAC	PCT	1	PCT	1	PCT/PT	PCT/PT	PCT/PT	PCT/PT	PCT/PT	ALL WALLS, PCT-1 (24"X24") UP TO 4'-0", PT-1
MRI119	BIO WASTE	WSV	2	WSV	2	PT					
MRI120	CLEAN SUPPLY	WSV	2	WSV	2	PT					
MRI121	SOILED UTILITY	WSV	2	WSV	2	PT					
MRI122	EQUIPMENT	CSL		RB	1	PT					SEE FINISH PLAN FOR FLOOR PATTERN
MRI123	STAFF TOILET	PCT	1	PCT	1	PCT/PT	PCT/PT	PCT/PT	PCT/PT	PCT/PT	
MRI124	STAFF LOCKERS	*CS	3,4,5	RB	1	PT	4	4			SEE FINISH PLAN FOR FLOOR PATTERN
MRI125	SHOWER	PCT	1	PCT	1	PCT/PT	PCT/PT	PCT/PT	PCT/PT	PCT/PT	
MRI126	STAFF LOUNGE	*CS	2,3,4,5	RB	1	PT				2	SEE FINISH PLAN FOR FLOOR PATTERN
MRI127	STAFF RADIOLOGIST	CPT	2	RB	1	PT	2	2	2	2	PAINT FINISH: MATTE
MRI128	PROF NON-PHYSICIAN	CPT	2	RB	1	PT				4	

FINISH MATERIAL NOTES

1. ALL WALLS SHALL BE PT-1, UNO.
2. 2. PAINT COUNTER TOP BRACES TO MATCH WALL.
3. PROVIDE FULL HEIGHT PAINTED 3/4" AC GRADE FIRE RETARDANT PLYWOOD OVER TYPE "X" GYPSUM BOARD ALL WALLS.

REFER TO SPECIFICATIONS 09 06 00 SCHEDULE FOR FINISHES FOR ABBREVIATIONS

STAINED CONCRETE NOTES

CS-1
CS-2
CS-3
CS-4
CS-5

SIGNAGE SCHEDULE

PLAN NO.	SIGN DESIGNATION	BACKGROUND COLOR	TEXT COLOR	NOTES
100	–	–	–	NOT USED
101	N.15.01	B7	T5	UP ARROW+"MRI LOBBY" SEE KDP-01 FOR LOCATION
102	–	–	–	NOT USED
103	N.15.01	B7	T5	SIDE1: UP ARROW+"GI DEPARTMENT" SIDE2: UP ARROW+"MRI LOBBY"
104	N.18.01	–	T1	REFER TO IN.01.06 FOR TEXT AND SIZE
105	N.08.04	B7	T5	
106	N.03.01 N.09.03	B11 B11	T5 T5	
107	N.03.01 N.09.03	B11 B11	T5 T5	
108	N.03.01	B11	T5	
109	N.03.01 N.04.02A	B11 B11	T5 T5	
110	N.03.01 N.04.01A	B11 B11	T5 T5	
111	N.03.01 N.07.01A	B11 B11	T5 T5	
112	N.03.01 N.04.02A	B11 B11	T5 T5	
113	N.03.01 N.04.02A	B11 B11	T5 T5	
114	N.03.01 N.04.02A	B11 B11	T5 T5	
115	N.03.01 N.04.02A	B11 B11	T5 T5	
116	N.03.01 N.04.02A	B11 B11	T5 T5	
117	N.03.01 N.09.03	B11 B11	T5 T5	
118	N.03.01 N.04.02A	B11 B11	T5 T5	
119	N.03.01 N.04.02A	B11 B11	T5 T5	
120	N.03.01 N.04.02A	B11 B11	T5 T5	
121	N.03.01 N.04.02A	B11 B11	T5 T5	
122	N.03.01 N.04.02A	B11 B11	T5 T5	
123	N.03.01 N.09.03	B11 B11	T5 T5	
124	N.03.01 N.04.02A	B11 B11	T5 T5	
125	N.18.01	–	T1	REFER TO IN.01.06 FOR TEXT SIZE
126	N.03.01 N.04.02A	B11 B11	T5 T5	
127	N.03.01 N.04.02A	B11 B11	T5 T5	
128	N.03.01 N.04.02A	B11 B11	T5 T5	
129	N.03.01 N.04.02A	B11 B11	T5 T5	
130	N.08.02	B7	T5	LOCATE ON C-MR12 SIDE OF DOOR
131	N.08.02	B7	T5	LOCATE ON C-MR12 SIDE OF DOOR
132	N.03.01 N.04.02A	B11 B11	T5 T5	
133	N.03.01 N.04.02A	B11 B11	T5 T5	
134	N.15.01	B7	T5	UP ARROW+"MRI LOBBY"
135	N.03.01 N.04.02A	B11 B11	T5 T5	
136	N.18.01	–	T1	REFER TO IN.01.06 FOR TEXT AND SIZE
137	N.15.01	B7	T5	UP ARROW+"MAIN HOSPITAL"
138	N.15.01	B7	T5	UP ARROW+"MRI LOBBY" SEE KDP-01 FOR LOCATION
139	N.01.02	B3	T1	4 LOCATIONS
140	N.01.22	B8	T4	
141	N.04.02	B11	T5	"18 CONSTRUCTION" 2 LOCATIONS SEE KDP-01
142	N.18.01	–	T1	COORDINATE TEXT WITH COTR. REFER TO SPECIFICATIONS FOR ARROW SIZE. 2 LOCATIONS SEE 7/A5-03
143	N.18.01		T1	BUSINESS HOURS. COORDINATE TEXT WITH COTR. REFER TO IN.02.04 FOR TEXT SIZE AND INFORMATION. SEE 7/A5-03 FOR ADDITIONAL INFORMATION.
144	N.18.01	–	T1	REFER TO SPECIFICATIONS FOR TEXT AND SIZE. SEE 7/A5-03 FOR ADDITIONAL INFORMATION.
145	N.02.03	B11	T5	CONFIRM WITH COTR. COORDINATE WITH COTR.
146	N.02.07	–	–	CONFIRM WITH COTR. FRAME-P2. COORDINATE WITH COTR.
147	N.02.08	–	–	CONFIRM WITH COTR. FRAME-P2. COORDINATE WITH COTR.

NOTE:
- PROVIDE ALL OSHA AND OTHER REGULATORY REQUIRED SIGNS
- COORDINATE SIGNAGE TEXT AND FINAL LOCATIONS WITH COTR

DESIGNER/ENGINEER DLL
CAD OPERATOR JG,TK,CK
QAQCCHECKER RDB

Revisions	Date
ISSUED FOR BID	02/28/2012
ADDENDUM 1	04/24/2012
PRE-BID AMENDMENT	05/10/2012

DesignLevel
455 Arden Road Columbus, OH 43214 p. 614.267.6603
www.DesignLevelArchitecture.com
planning interior design architecture

© Copyright 2012

STATE OF OHIO ROBERT D. BARGA 07459 REGISTERED ARCHITECT
Professional Seal

Revised By: ---

Drawing Title: PARTIAL FLOOR FINISH PLAN
SCALE: 1/4"=1'-0"
Approved: Project Manager RANDI FIORINA
Approved: Service Chief GARY ABREU

Project Title: OPEN MRI SITE PREP
Building Number 335 | Checked DESIGNLEVEL | Drawn
Location 4100 WEST THIRD STREET DAYTON, OH 45428

Date 02-28-2012
Project No. 552-CSI-101
Drawing No. A7-02

VAMC, DAYTON
Department of Veterans Affairs

VA FORM 08-6231, OCT 1978

SPRINKLER LOCATION IN CEILING TILE — A / FP1-01

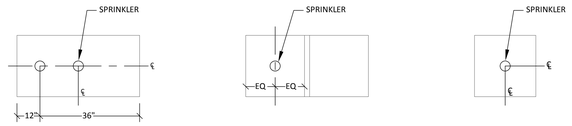

2' x 4' CEILING TILE (EITHER LOCATION) | 2' x 4' CEILING TILE W/ DIVIDER | 2' x 2' CEILING TILE

SCALE: NONE

FIRE PROTECTION SYMBOLS LEGEND

F/L	FIRE PROTECTION WATER SERVICE (U/G)
W/L	DOMESTIC WATER SERVICE (U/G)
F	FIRE SPRINKLER MAIN
D	TEST / DRAIN PIPING
	DOMESTIC COLD WATER (CW)
	BALL OR BUTTERFLY VALVE
	GATE VALVE
	OS&Y GATE VALVE
FH	FIRE HYDRANT
	CURB BOX VALVE
PIV	POST INDICATING VALVE
FDC	FIRE DEPARTMENT CONNECTION (EXPOSED)
FTH	FIRE PUMP TEST HEADER (CONCEALED)
C	PIPE DOWN
	PIPE UP
E	PIPE CAP (OR PLUG)
	UPRIGHT SPRINKLER
	PENDANT SPRINKLER
	CONCEALED SPRINKLER
	DRY PENDANT SPRINKLER
	SIDEWALL SPRINKLER
	DRY SIDEWALL SPRINKLER
P	PRESSURE GAUGE
PS	PRESSURE SWITCH
FS	FLOW SWITCH
	VALVE W/ TAMPER SWITCH
	PIPE-FLOOR PENETRATION (2ND FL.)
F1	EQUIPMENT SERVED ON FLOOR ABOVE
	CONNECTION POINT, NEW TO EXISTING
	ALARM VALVE
	DRY PIPE VALVE
A.F.F.	ABOVE FINISHED FLOOR
BF	BULK FEED
C.I.	CAST IRON
C.P.	CHROME PLATED
D.I.	DUCTILE IRON
DP	DRY PIPE
EXG.	EXISTING
FDC	FIRE DEPARTMENT CONNECTION
FHC	FIRE HOSE CABINET
SR.	SUPPLY RISER
A / FP2.1	DETAIL REFERENCE SYMBOL, DETAIL "A" SHOWN ON SHEET "FP2.1"

FIRE PROTECTION GENERAL NOTES

1.- PROVIDE COMPLETE WET PIPE FIRE SPRINKLER PROTECTION PER NFPA 13 AND WET STANDPIPE PROTECTION PER NFPA 14 THROUGHOUT THE ENTIRE BUILDING ADDITION AS FOLLOWS:

(A) SPRINKLER SYSTEM DESIGN SHALL BE BASED ON ORDINARY HAZARD OCCUPANCY IN MECH. EQUIP. ROOMS, STORAGE AREAS HYDRAULICALLY CALCULATED WITH A DENSITY OF .15 GPM/SQ. FT. FOR 1500 SQ. FT. REMOTE AREA OF SPRINKLER OPERATION FOR EACH DESIGN AREA. SPRINKLER SPACING SHALL NOT EXCEED 130 SQ. FT. PER SPRINKLER.

2.- SPRINKLERS SHALL BE LOCATED IN RELATIONSHIP TO LIGHTING FIXTURES & HVAC DIFFUSERS. SPRINKLERS SHALL BE CENTERED IN CEILING TILES (OR AT THE "QUARTER" POINTS) & MAINTAIN A SYMMETRICAL PATTERN FOR AN AESTHETICALLY PLEASING EFFECT. NO PIPING SHALL BE EXPOSED W/ THE EXCEPTION OF PIPING IN AREAS OF EXPOSED CONSTRUCTION. PUBLIC SPACES W/ EXPOSED STRUCTURE SHALL HAVE ALL PIPING ABOVE THE BOTTOM CHORD OF TRUSSES.

3.- FIRE PROTECTION RISERS AND MAINS ARE SHOWN FOR COORDINATION PURPOSES AND SHALL BE INSTALLED AS CLOSE AS POSSIBLE TO LOCATIONS INDICATED ON THIS PLAN.

4.- ALL PIPING SHALL BE CONCEALED IN AREAS OF FINISHED CONSTRUCTION. FINISHED AREAS WITH EXPOSED STRUCTURE SHALL HAVE ALL PIPING RUN ABOVE THE BOTTOM CHORD OF TRUSSES UNLESS NOTED OTHERWISE.

5.- ALL FIRE PROTECTION INSTALLATION SHALL BE IN STRICT ACCORDANCE WITH THE LATEST EDITIONS OF THE INTERNATIONAL BUILDING CODE & NFPA STANDARDS.

6.- THESE PLANS WERE NOT PREPARED FOR SUBMITTAL & APPROVAL OF FIRE PROTECTION SYSTEMS.

7.- PER VA FIRE PROTECTION DESIGN MANUAL, THIS PLAN IS PROVIDED TO ASSIST CONTRACTOR IN PREPARING A COMPLETE FIRE PROTECTION BID. THE CONTRACTOR SHALL INCLUDE ALL WORK AND COSTS OF MATERIALS AND INSTALLATION, AND PREPARATION OF DRAWINGS AND HYDRAULIC CALCULATIONS.

8.- SUBMIT COMPLETE SPRINKLER / PIPING DRAWINGS AND HYDRAULIC CALCULATIONS TO AUTHORITIES HAVING JURISDICTION.

9.- PROVIDE SUPERVISORY SWITCHES FOR ALL VALVES CONTROLLING THE FIRE SPRINKLER AND STANDPIPE SYSTEMS.

10.- CONTRACTOR SHALL PERFORM A NEW FLOW TEST PRIOR TO PREPARING HYDRAULIC CALCULATIONS.

11.- PRIOR TO FABRICATION OR INSTALLATION OF PIPING, THE CONTRACTOR SHALL COORDINATE LOCATIONS & ELEVATIONS OF OTHER EQUIPMENT, INCLUDING, BUT NOT LIMITED TO LIGHT FIXTURES, DIFFUSERS, DUCTWORK, CONDUITS, PIPING, & CEILING GRID.

12.- COORDINATE ALL SPRINKLER HEAD LOCATIONS WITH ARCHITECTURAL PLANS PRIOR TO LAYOUT, FABRICATION, AND INSTALLATION OF PIPING AND HEADS.

13.- COORDINATE FINISH OF SPRINKLER HEADS WITH ARCHITECT PRIOR TO PURCHASE OR INSTALLATION.

FLOOR CONTROL VALVE DETAIL — 1 /FP1-01

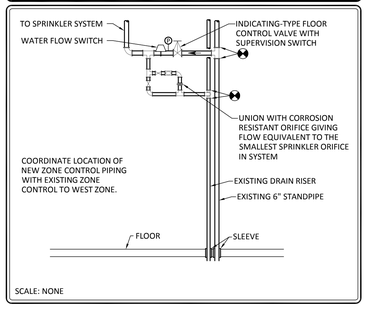

SCALE: NONE

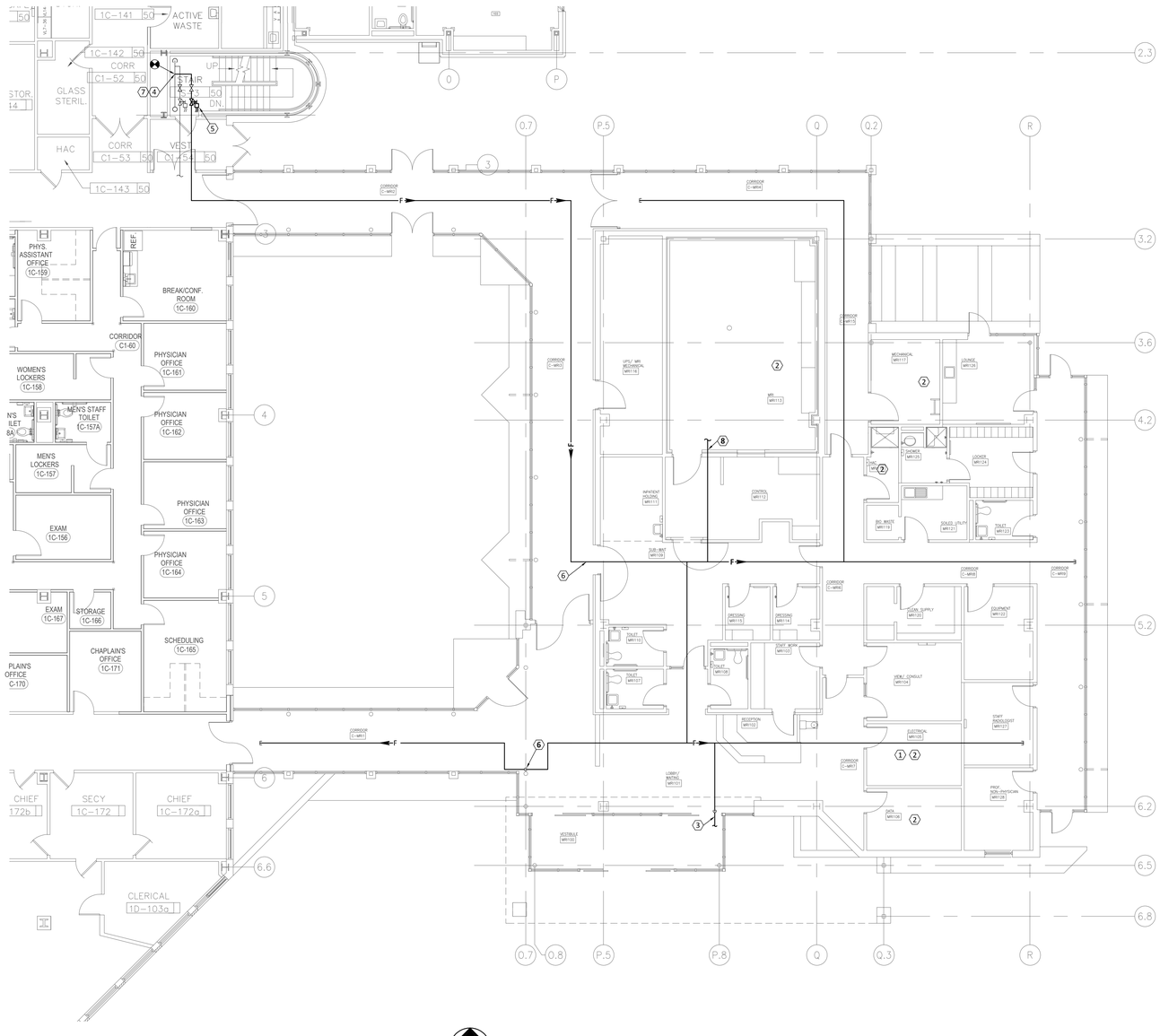

FIRST FLOOR FIRE PROTECTION PLAN

SCALE: 1/8"=1'-0"

GENERAL NOTES

A. ALL SPACES TO BE LIGHT HAZARD AREAS EXCEPT WHERE NOTED OTHERWISE. REFER TO FIRE PROTECTION GENERAL NOTES ON THIS SHEET.

PLAN NOTES

1.- NO SPRINKLER PIPING TO BE ROUTED WITHIN ELECTRICAL ROOM EXCEPT FOR THE BRANCH FEEDING SPRINKLER HEAD(s) WITHIN ELECTRIC ROOM. COORDINATE ROUTING OF PIPING WITHIN ELECTRICAL ROOM WITH ELECTRICAL EQUIPMENT.

2. ORDINARY HAZARD AREA. REFER TO FIRE PROTECTION GENERAL NOTES ON SHEET FA000.

3.- COORDINATE WITH STRUCTURE TO CONCEAL PIPING RUNNING INTO VESTIBULE CEILING.

4.-CONNECT NEW SPRINKLER ZONE PIPING TO EXISTING 6" STANDPIPE. SEE DETAIL 1/FP1-01 ON THIS SHEET FOR ZONE CONTROL PIPING.

5.-PROVIDE TAMPER SWITCH AND ZONE ISOLATION VALVES AS REQUIRED PER NFPA.

6.-COORDINATE ROUTING OF SPRINKLER PIPING WITH ARCHITECTURAL. RUN PIPING IN SOFFITS/CHASES.

7.-COORDINATE FINAL LOCATION OF SPRINKLER PIPING WITH EXISTING CONDITIONS. LABEL EXISTING ZONE CONTROL "WEST ZONE" AND NEW ZONE CONTROL "EAST ZONE"

8.-SEE DETAIL 1 ON SHEET M0-00 FOR ALL WORK INVOLVING PENETRATIONS OF MRI ROOM.

NOTICE TO BIDDERS

ALL ITEMS INDICATED ON THIS PLAN AS EXISTING ARE APRPOXIMATE LOCATIONS. SITE VISITS DURING THE BIDDING PROCESS ARE RECOMMENDED IN ORDER TO DETERMINE ACTUAL EXISTING FIELD CONDITIONS. IT IS THEREFORE THE RESPONSIBILITY OF THE BIDDER TO NOTIFY THE ENGINEER DURING THE BIDDING PROCESS OF ANY FIELD CONDITIONS WHICH MAY NOT BE INDICATED ON THIS PLAN AND WHICH MAY HAVE AN EFFECT ON THE PREPARATION OF A COMPETITIVE BID.

DESIGNER/ENGINEER SH
CAD OPERATOR SH
QAQC/CHECKER BL

Revisions	Date
ISSUED FOR BID	02/28/2012
PRE-BID AMENDMENT, REV 1	04/26/2012
PRE-BID AMENDMENT	05/10/2012

Dynamix Engineering Ltd.
Facility Engineering Consultants
855 Grandview Avenue, Third Floor Columbus, Ohio 43215
Phone: (614)443-1178 · Fax: (614)443-1594 · Email: dynamix@dynamix-ltd.com
Comm. No.: 110028

STATE OF OHIO — MACE E-50556, MONTGOMERY E-46852, GRIFFIN E-57049 — REGISTERED PROFESSIONAL ENGINEER

Professional Seal

Revised By:

Drawing Title	FIRST FLOOR FIRE PROTECTION PLAN — SCALE: 1/8"=1'-0"
Project Title	OPEN MRI SITE PREP
Date	02-28-2012
Project No.	552-CSI-101
Approved: Project Manager	RANDI FIORINA
Building Number	335
Checked	DYNAMIX
Drawn	???
Drawing No.	FP1-01
Approved: Service Chief	GARY ABREU
Location	4100 WEST THIRD STREET DAYTON, OH 45428

VAMC, DAYTON — VA Department of Veterans Affairs

VA FORM 08-6231, OCT 1978

PLUMBING FIXTURE & ROUGH-IN SCHEDULE

PLUMBING CONTRACTOR TO FURNISH INSTALL, PROVIDE ROUGH-IN AND FINAL CONNECTIONS FOR ALL FIXTURES AND EQUIPMENT SHOWN ON THIS SCHEDULE.
COORDINATE AND VERIFY LOCATIONS OF EQUIPMENT WITH ARCHITECTURAL AND PLUMBING DRAWINGS BEFORE INSTALLATION OF ANY FIXTURES, EQUIPMENT OR PIPING.

TAG	ITEM	SUPPLY HW (85°)	SUPPLY HW (110°)	SUPPLY HW (140°)	SUPPLY CW	WASTE & VENT OUTLET	WASTE & VENT TRAP	WASTE & VENT SAFE WASTE	WASTE & VENT BELOW FLOOR WASTE	WASTE & VENT VENT	REQ'D COMPONENTS & SERVICES
WC1	WALL HUNG WATER CLOSET	-	-	-	1"	4"	-	-	4"	2"	1
L1	LAVATORY - SOLID SURFACE INTEGRAL WITH COUNTERTOP - SEE ARCH. DRAWINGS FOR DETAILS	-	1/2"	-	1/2"	1-1/4"	1-1/4"	-	2"	1-1/2"	2
L2	WALL HUNG LAVATORY	-	1/2"	-	1/2"	1-1/4"	1-1/4"	-	2"	1-1/2"	2
S1	SINK - SOLID SURFACE INTEGRAL WITH COUNTERTOP - SEE ARCH. DRAWINGS FOR DETAILS	-	1/2"	-	1/2"	1-1/2"	1-1/2"	-	2"	1-1/2"	3
S2	SINGLE BOWL SS SINK (16"x19"x7.5")	-	1/2"	-	1/2"	1-1/2"	1-1/2"	-	2"	1-1/2"	3
SA	SHOCK ABSORBER	-	LINE SIZE	-	LINE SIZE	-	-	-	-	-	8
SH1	SHOWER VALVE	-	1/2"	-	1/2"	2"	2"	-	2"	1-1/2"	4
MB	"MOLDED STONE" MOP BASIN (28"x28"x12")	-	-	3/4"	3/4"	3"	3"	-	3"	2"	5
WHD1	WALL HYDRANT	-	-	-	3/4"	-	-	-	-	-	6,9
TP1	TRAP PRIMER	-	-	-	1/2"	-	-	-	-	-	7

REQUIRED COMPONENTS & SERVICES

PLUMBING CONTRACTOR TO PROVIDE THE FOLLOWING ITEMS AND/OR SERVICES FOR COMPLETE INSTALLATION OF FIXTURES AND EQUIPMENT
* EXCEPTION: WHERE CONNECTING TO LARGER SANITARY TRUNKLINE - REFER TO STACK DIAGRAMS
** REFER TO SANITARY STACK DIAGRAM FOR REQUIRED VENTING OF FLOOR AND SHOWER DRAINS. VENTING EXCEPTIONS PER OHIO PLUMBING CODE MAY BE APPLICABLE.

1. COLOR: WHITE
   FLUSH VALVE: SENSOR OPERATED ELECTRONIC FLUSH VALVE
   SEAT: ELONGATED, OPEN FRONT WITH CHECK HINGE
   MOUNTING HEIGHT: 17" A.F.F. TO RIM (ADA) - 15" A.F.F. TO RIM (STANDARD)

2. COLOR: WHITE
   FAUCET: CHROME - ONE HANDLE LAV FAUCET (NOT GOOSENECK TYPE)
   MOUNTING: 34" A.F.F. (RIM HEIGHT) FOR WALL HUNG UNITS
   L1 NOTE: BOWL IS INTEGRAL WITH COUNTERTOP, PROVIDE SUPPLY FAUCET AND RELATED PIPING TO FIXTURES TAGGED WITH A L1.

3. FAUCET: 8" GOOSENECK FAUCET W/ 4" WRIST BLADE HANDLES & 2.0 GPM AREATOR
   DEPTH: 6-1/2"

4. MIXER: THERMOSTATIC/PRESSURE-BALANCE SHOWER VALVE & HEAD W/ HAND HELD SHOWER W/ 60" VINYL HOSE & 24" SLIDE BAR, WALL SPOUT W/ VACUUM BREAKER, AND 778-18K DIVERTER VALVE.
   GRAB BARS: 1-1/2" HORIZONTAL WRAP AROUND GRAB BAR & 1-1/2" VERTICAL STRAIGHT GRAB BAR, MOUNT PER ADA REQUIREMENTS
   OTHER ACCESSORIES: 1" S.S. ROD, WEIGHTED SHOWER CURTAIN W/ HOOKS, CHROME PLATED BRASS SOAP DISH
   NOTE: VERIFY QUANTITY OF RIGHT & LEFT HANDED UNITS PRIOR TO ORDERING

5. FAUCET: COMBINATION SERVICE SINK FITTING W/ 3/4" HOSE, WALL BRACKET, PAIL HOOK AND INTEGRAL STOPS & VACUMM BREAKER SPOUT
   CHECK VALVES: PROVIDE CHECK VALVES ON HW & CW SUPPLIES TO FAUCET

6. MOUNTING HEIGHT: 20" ABOVE GRADE

7. LOCATION: INSTALL ABOVE FLOOR
   SHUT-OFF VALVE: INSTALL 1/2" BALL VALVE ON BRANCH
   NOTE: BRANCH FEEDING TRAP PRIMER SHALL COME FROM TOP OF SERVICING BRANCH AS RECOMMENDED BY MANUFACTURER. INSTALL DISTRIBUTION UNIT AS NECESSARY FOR CONNECTION TO MULTIPLE FLOOR DRAINS.

8. SHOCK ABSORBER: PROVIDE SHOCK ABSORBER ON HW AND CW BRANCHES
   MOUNTING: 42" A.F.F.

9. MISC. INSTALL COLD WATER SUPPLY PIPING PER ALL MANUFACTURER'S RECOMMENDATIONS FOR FREEZELESS INSTALLATIONS.

PLUMBING EQUIPMENT & ROUGH-IN SCHEDULE

PLUMBING CONTRACTOR TO FURNISH INSTALL, PROVIDE ROUGH-IN AND FINAL PLUMBING CONNECTIONS FOR ALL EQUIPMENT SHOWN ON THIS SCHEDULE.
COORDINATE ELECTRICAL REQUIREMENTS WITH E.C. AND HVAC REQUIREMENTS WITH HVAC CONTRACTOR.
COORDINATE AND VERIFY LOCATIONS OF EQUIPMENT WITH PLUMBING DRAWINGS BEFORE INSTALLATION OF ANY EQUIPMENT OR PIPING.

TAG	ITEM	PLUMBING 140° HW	PLUMBING 110° HW	PLUMBING CW	PLUMBING GAS	PLUMBING SAN	PLUMBING VENT	HVAC FLUE	ELECTRICAL POWER	ELECTRICAL VOLTAGE	ELECTRICAL PHASE	REQ'D COMPONENTS & SERVICES
WH	SEMI-INSTANTANEOUS DOMESTIC HOT WATER HEATER	1-1/4"	-	1-1/4"	-	-	-	-	60 Hz	120	1	1
CP	1/6 HP HOT WATER CIRCULATING PUMP	-	1"	-	-	-	-	-	1/6 HP	120	1	2
TXT	THERMAL EXPANSION TANK	-	-	1"	-	-	-	-	-	-	-	-
BFP	REDUCED-PRESSURE BACKFLOW PREVENTER	-	-	2"	-	-	-	-	-	-	-	4
DF	ADA NON-RECESSED DRINKING FOUNTAIN	-	-	1/2"	-	1-1/2"	1-1/2"	-	-	-	-	3
MV1	HIGH/LOW THERMOSTATIC MIXING VALVE	1-1/4"	1-1/4"	1-1/4"	-	-	-	-	-	120	1	-

REQUIRED COMPONENTS & SERVICES

PLUMBING CONTRACTOR TO PROVIDE THE FOLLOWING ITEMS AND/OR SERVICES FOR COMPLETE INSTALLATION OF EQUIPMENT
* SEE SPECIFICATIONS FOR EQUIVALENT MANUFACTURERS.

1. CAPACITY: 20 GPM FROM 40°F TO 140°F
   STEAM: 30 PSI
   INCLUDE: 1/25 HP, 120/60/1 CIRCULATING PUMP, 90/10 CU-NI DOUBLE WALL HEAT EXCHANGER, ELECTRIC VALVE WITH STRAINER, PRESSURE RELIEF VALVE, VACUUM BREAKER.

2. **ELECTRICAL: 120 V / SINGLE PHASE**
   CAPACITY: 10 GPM @ 30 FT HD

3. MOUNTING: MOUNT WITH 27" (A.F.F.) CLEAR BELOW FIXTURE FOR ADA
   FINISH: STAINLESS STEEL (UNIT HOUSING)
   ELECTRIC: 15 AMP, 120/1/60

4. **INCLUDE: STRAINER, AIR GAP FITTING**
   PIPING: EXTEND PIPING FROM AIR GAP FITTING FULL SIZE TO NEAREST FLOOR DRAIN

DOMESTIC HOT WATER HEAT EXCHANGER DETAIL — 1 / P0-0

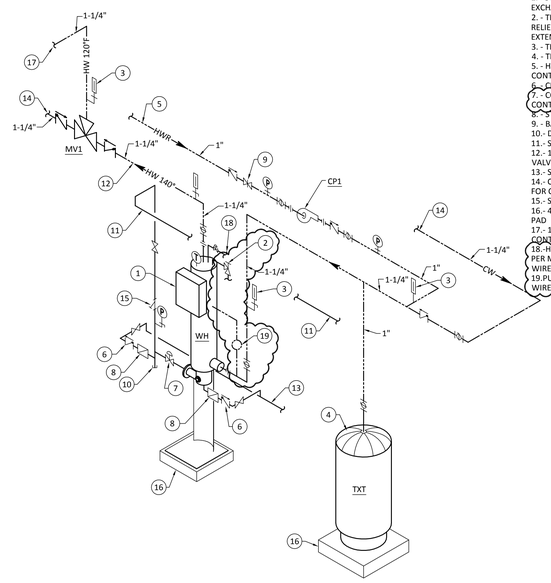

DETAIL NOTES

1. - STEAM / WATER HEAT EXCHANGER (ANCHOR TO FLOOR)
2. - TEMPERATURE & PRESSURE RELIEF VALVE (FACTORY INSTALLED), EXTEND PIPING TO FLOOR DRAIN
3. - THERMOMETER
4. - THERMAL EXPANSION TANK
5. - HWR, SEE PLANS FOR CONTINUATION
6. - CHECK VALVE, TYP.
7. - CONTROL VALVE. WIRE TO UNIT CONTROLLER.
8. - STRAINER
9. - BALANCE VALVE
10. - DIRT LEG
11. - STEAM SUPPLY PIPING
12. - 140 ° HW TO MASTER MIXING VALVE
13. - STEAM CONDENSATE PIPING
14. - CW FROM SYSTEM, SEE PLANS FOR CONTINUATION
15. - STRAINER
16. - 4" CONCRETE HOUSEKEEPING PAD
17. - 120° HW, SEE PLANS FOR CONTINUATION
18. -HIGH LIMIT TO DRAIN. INSTALL PER MFR'S RECOMMENDATIONS. WIRE TO UNIT CONTROLLER.
19.PUMP FURNISHED BY UNIT MFR. WIRE TO UNIT CONTROLLER.

SCALE: NONE

DOMESTIC WATER SYSTEM RISER — 4 /P0-0

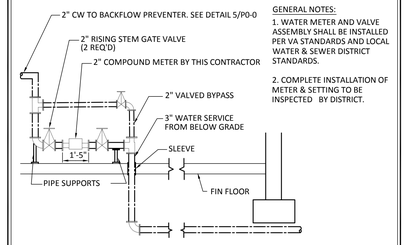

GENERAL NOTES:
1. WATER METER AND VALVE ASSEMBLY SHALL BE INSTALLED PER VA STANDARDS AND LOCAL WATER & SEWER DISTRICT STANDARDS.
2. COMPLETE INSTALLATION OF METER & SETTING TO BE INSPECTED BY DISTRICT.

SCALE: NONE

BACKFLOW PREVENTER PIPING DETAIL — 5 / P0-0

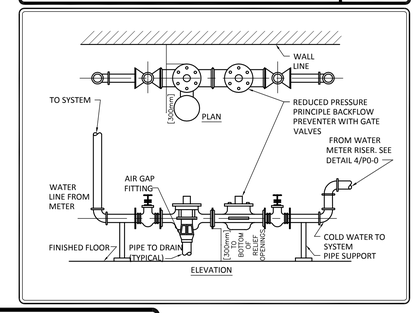

LEGEND

— (E) —	EXISTING PIPING
	PIPING OR EQUIPMENT TO BE REMOVED
—SAN—	SANITARY SEWER ABOVE FLOOR
—SAN—	SANITARY SEWER BELOW FLOOR
-----V-----	SANITARY VENT
—ST—	STORM SEWER ABOVE CEILING
—ST—	STORM SEWER BELOW FLOOR
—W/L—	DOMESTIC WATER SERVICE (U/G)
	DOMESTIC COLD WATER (CW)
	DOMESTIC HOT WATER (HW)
	DOMESTIC HOT WATER RETURN (HWR)
—(HT)—	**DOM. HW W/ TEMP. MAINTENANCE HEAT TRACE**
—110° HW—	TEMPERED WATER (@ 110°F)
—110°(HT)—	**110° HW W/ TEMP. MAINTENANCE HEAT TRACE**
—G—	NATURAL GAS
—CA—	COMPRESSED AIR
	PLUG VALVE (OR UL LISTED BALL/BUTTERFLY)
	GAS PRESSURE REGULATOR
	BALL VALVE
	BALL VALVE ON RISE OR DROP
	THERMOSTATIC TEMPERING VALVE
	GATE VALVE
	GATE VALVE ON RISE OR DROP
	BUTTERFLY VALVE
	BUTTERFLY VALVE ON RISE OR DROP
	OS&Y GATE VALVE
	COMBINATION BALANCING/SHUT-OFF VALVE
	CHECK VALVE
	PRESSURE REDUCING VALVE
	SOLENOID VALVE
	IN-LINE METER
	Y-TYPE STRAINER
	UNION
	AQUASTAT
T	THERMOMETER
P	PRESSURE GAUGE
	CONCENTRIC PIPE REDUCER
	DIRECTION OF FLOW
	DIRECTION OF SLOPE (DOWN)
"B"	PIPE-FLOOR PENETRATION (2ND FL.)
"B"	SHOCK ARRESTER (PDI SIZE "B")
WC1	FIXTURE SERVED ON FLOOR ABOVE
D	STACK SYMBOL
	PIPE DOWN
	PIPE UP
	PIPE CAP (OR PLUG)
C.O.	CLEANOUT
FCO	FLOOR CLEANOUT
GCO	GRADE CLEANOUT
FD	FLOOR DRAIN
OD	OVERFLOW (SCUPPER) DRAIN
RD	ROOF DRAIN
WH	WALL HYDRANT
HB	HOSE BIB
	CONNECTION POINT, NEW TO EXISTING
A.F.F.	ABOVE FINISHED FLOOR
CO	CLEANOUT
C.I.	CAST IRON
C.P.	CHROME PLATED
D.I.	DUCTILE IRON
DS.	DOWN SPOUT
EXG.	EXISTING
FD	FLOOR DRAIN
RD	ROOF DRAIN
SF	SAFETY FACTOR
SR.	SUPPLY RISER
SS.	SANITARY STACK
TW.	TEMPERED WATER
VR.	VENT RISER
VS.	VENT STACK
VTR.	VENT THRU ROOF
LPG	LOW PRESSURE GAS
MPG	MEDIUM PRESSURE GAS
HPG	HIGH PRESSURE GAS
A / P2-1	DETAIL REFERENCE SYMBOL, DETAIL "A" SHOWN ON SHEET "P2-1"

PLUMBING DRAIN & CLEANOUT SCHEDULE & ROUGH-IN

PLUMBING CONTRACTOR TO FURNISH INSTALL, PROVIDE ROUGH-IN AND FINAL CONNECTIONS FOR ALL FIXTURES AND EQUIPMENT SHOWN ON THIS SCHEDULE.
COORDINATE AND VERIFY LOCATIONS OF EQUIPMENT WITH ARCHITECTURAL AND PLUMBING DRAWINGS BEFORE INSTALLATION OF ANY FIXTURES, EQUIPMENT OR PIPING.

TAG	ITEM	CW	WASTE & VENT OUTLET	WASTE & VENT TRAP	WASTE & VENT SAFE WASTE	WASTE & VENT BELOW SLAB WASTE	WASTE & VENT VENT	REQ'D COMPONENTS & SERVICES
FD1	5" DIAMETER FLOOR DRAIN	-	3"	3"	-	3"	1-1/2"	2
DSN	DOWNSPOUT NOZZLE	-	-	-	-	-	-	-
FCO	FLOOR CLEANOUT	-	-	-	-	-	-	1
WCO	WALL CLEANOUT	-	-	-	-	-	-	-
GCO	HEAVY DUTY CLEAN OUT	-	-	-	-	-	-	-
RD	15" DIAMETER ROOF DRAIN	-	4"	-	-	-	-	-
ERD	15" DIAMETER ROOF DRAIN	-	4"	-	-	-	-	-

REQUIRED COMPONENTS & SERVICES

PLUMBING CONTRACTOR TO PROVIDE THE FOLLOWING ITEMS AND/OR SERVICES FOR COMPLETE INSTALLATION OF FIXTURES AND EQUIPMENT
* EXCEPTION: WHERE CONNECTING TO LARGER SANITARY TRUNKLINE - REFER TO STACK DIAGRAMS

1. TAGGING: PROVIDE "SANITARY", "STORM" & "LAB" TAGGING AS APPLICABLE ON CLEANOUT COVERS

2. NOTE: PROVIDE TRAP PRIMER CONNECTIONS TO ALL FLOOR DRAINS. PROVIDE HUB FOR FD SERVING EMERGENCY HEAT EXCHANGER.

CAULKING — 2/ P0-0

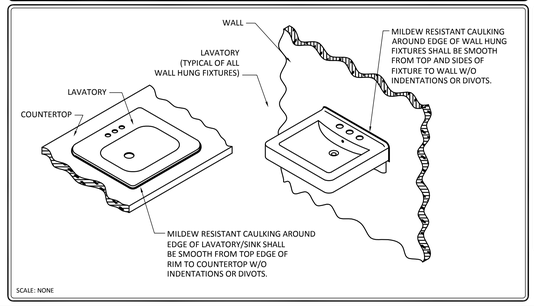

SCALE: NONE

POINT-OF-USE VALVE PIPING DETAIL — 3/P0-0

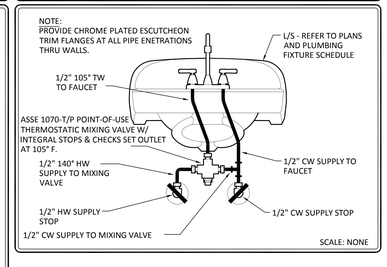

SCALE: NONE

NOTICE TO BIDDERS

ALL ITEMS INDICATED ON THIS PLAN AS EXISTING ARE APPROXIMATE LOCATIONS. SITE VISITS DURING THE BIDDING PROCESS ARE RECOMMENDED IN ORDER TO DETERMINE ACTUAL EXISTING FIELD CONDITIONS. IT IS THERFORE THE RESPONSIBILITY OF THE BIDDER TO NOTIFY THE ENGINEER DURING THE BIDDING PROCESS OF ANY FIELD CONDITIONS WHICH MAY NOT BE INDICATED ON THIS PLAN AND WHICH MAY HAVE AN EFFECT ON THE PREPARATION OF A COMPETITIVE BID.

DESIGNER/ENGINEER SH
CAD OPERATOR SH
QAQC/CHECKER BL

Revisions	Date
ISSUED FOR BID	02/28/2012
PRE-BID AMENDMENT, REV 1	04/26/2012
PRE-BID AMENDMENT	05/10/2012

Dynamix Engineering Ltd.
Facility Engineering Consultants
855 Grandview Avenue, Third Floor Columbus, Ohio 43215
Phone: (614)443-1178 · Fax: (614)443-1594 · Email: dynamix@dynamix-ltd.com
Comm. No.: 110028

STATE OF OHIO — MACE E-50556, MONTGOMERY E-66852, GRIFFIN E-57049 — REGISTERED PROFESSIONAL ENGINEER
Professional Seal

Revised By:

Drawing Title: PLUMBING SCHEDULES AND DETAILS
SCALE: NONE

Project Title: OPEN MRI SITE PREP

Date: 02-28-2012
Project No. 552-CSI-101
Drawing No. P0-00

Approved: Project Manager: RANDI FIORINA
Approved: Service Chief: GARY ABREU

Building Number: 335
Checked: DYNAMIX
Drawn: SH
Location: 4100 WEST THIRD STREET DAYTON, OH 45428

VAMC, DAYTON
VA Department of Veterans Affairs

VA FORM 08-6231, OCT 1978

PLAN NOTES

1.-SEE SITE PLAN FOR CONTINUATION.

2.-COORDINATE PIPING LOCATION WITH SOFFIT. SEE ARCHITECTURAL PLANS.

3.-SEE "MRI PENETRATION DETAIL" ON SHEET M0-00 FOR ALL PIPING PENETRATIONS OF MRI ROOM.

4.-SECONDARY ROOF DRAIN SPOUT.

5.- LOCATION OF WATER RISER, METER, AND BFP. SEE DETAILS 4/P0-0 AND 5/P0-0.

6.- DOWNSPOUT IN ARCHITECTURAL ENCLOSURE. PROVIDE SLEEVE AT PENETRATION OF STRUCTURE BELOW GRADE. REFER TO ARCHITECTURAL PLAN A1-05 AND CIVIL PLAN GS3-01 FOR ADDITIONAL DETIALS.

7.-SPACE FOR EMERGENCY COOLING HEAT EXCHANGER FURNISHED BY MRI EQUIPMENT MANUFACTURER. RUN 1" DRAIN LINE FROM EMERGENCY COOLING HEAT EXCHANGER TO FLOOR DRAIN.

8.-PROVICE 1" DCW LINE AND CONNECT TO EMERGENCY COOLING HEAT EXCHANGER.

9.-PROVIDE ZONE VALVE BOX PER SPECIFICATION SECTION 22 63 00. SEE ZONE VALVE DETAIL ON THIS SHEET.

10.-INSTALL ZONE VALVE REMOTE AREA ALARM PANEL AT THIS LOCATION.

11.-O2, MA, AND VAC OUTLET BOX. SEE SPECIFICATION SECTIONS 22 62 00 AND 22 63 00.

12.-DROP ½" CW LINE DOWN INSIDE WALL AND CONNECT TO ICE MACHINE. PROVIDE SHUT-OFF VALVE AT WALL PENETRATION (AT ICE MACHINE). SEE ARCHITECTURAL DRAWINGS FOR ICE MACHINE LOCATION.

NORTH

PLUMBING STACK
SCALE: NONE

ZONE VALVE / AREA ALARM PANEL | 1/ P1-01

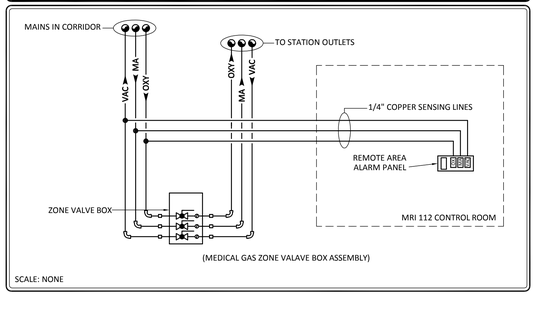

SCALE: NONE

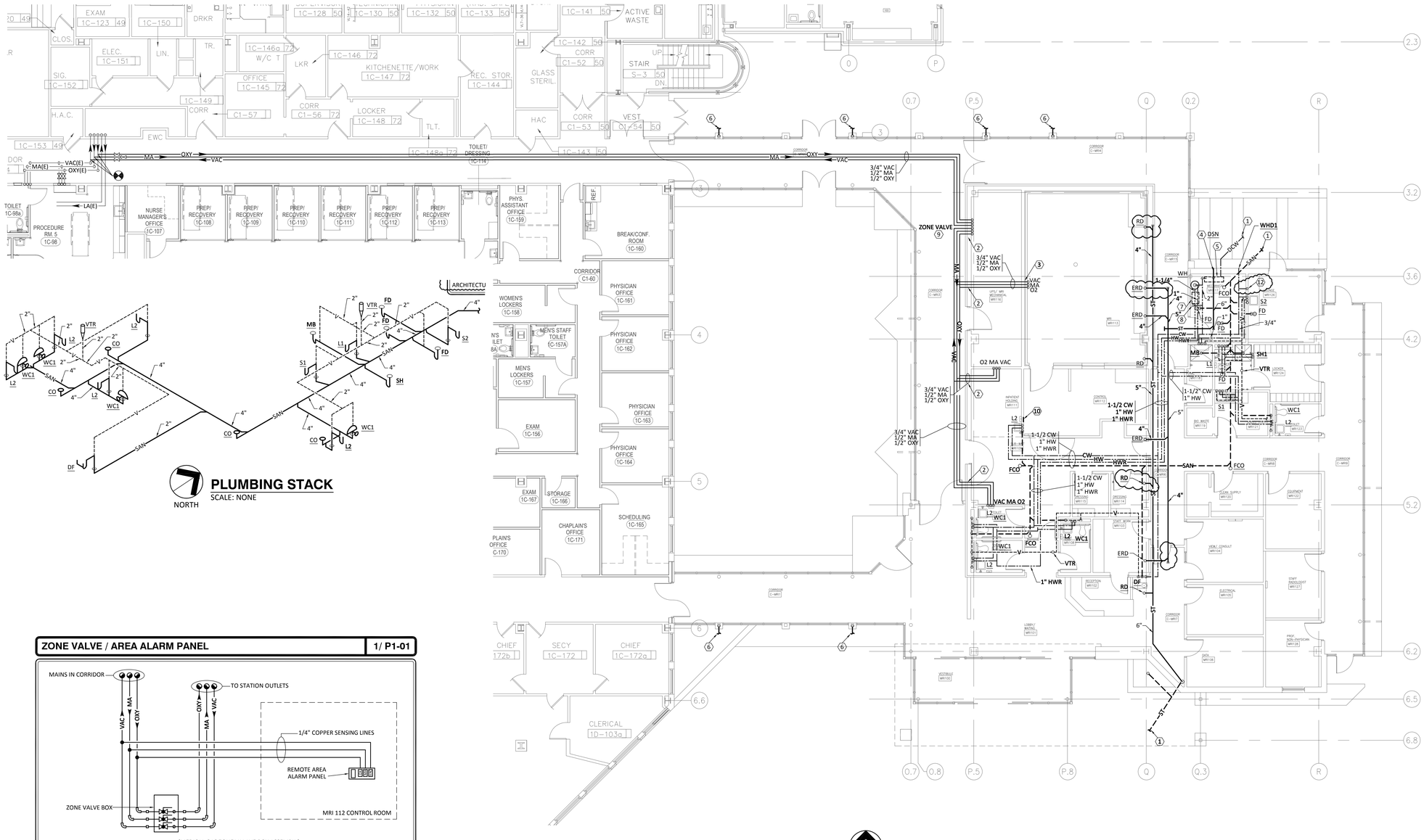

NORTH

FIRST FLOOR PLUMBING PLAN
SCALE: 1/8"=1'-0"

DESIGNER/ENGINEER	SH
CAD OPERATOR	SH
QA/QC/CHECKER	BL

Revisions	Date
ISSUED FOR BID	02/28/2012
PRE-BID AMENDMENT, REV 1	04/26/2012
PRE-BID AMENDMENT	05/10/2012

Dynamix Engineering Ltd.
Facility Engineering Consultants
855 Grandview Avenue, Third Floor Columbus, Ohio 43215
Phone: (614)443-1178 · Fax: (614)443-1594 · Email: dynamix@dynamix-ltd.com
Comm. No.: 110028

STATE OF OHIO · MACE E-50556 · MONTGOMERY E-66852 · GRIFFIN E-57049 · REGISTERED PROFESSIONAL ENGINEERS

Professional Seal

Revised By:

Drawing Title	Project Title	Date
FIRST FLOOR PLUMBING PLAN SCALE: 1/8"=1'-0"	OPEN MRI SITE PREP	02-28-2012
Approved: Project Manager RANDI FIORINA	Building Number 335 · Checked DYNAMIX · Drawn SH	Project No. 552-CSI-101
Approved: Service Chief GARY ABREU	Location 4100 WEST THIRD STREET DAYTON, OH 45428	Drawing No. P1-01

VAMC, DAYTON

VA Department of Veterans Affairs

VA FORM 08-6231, OCT 1978

HVAC LEGEND (ALL MAY NOT APPLY)

- REFRIGERATION MONITORING SYSTEM ALARM DEVICE
- SPACE TEMPERATURE SENSOR - MOUNTING HEIGHT 48"
- SPACE HUMIDISTAT
- SPACE MOTION SENSOR
- THERMOSTAT ELECTRIC - MOUNTING HEIGHT 48"
- THERMOSTAT PNEUMATIC - MOUNTING HEIGHT 48"
- CARBON MONOXIDE SENSOR
- SPACE PRESSURE SENSOR
- (P-1)E — EXISTING EQUIPMENT TAG
- H-1 — NEW EQUIPMENT REFERENCE SYMBOL
- 2 — NOTE SYMBOL
- CONNECT TO EXISTING SYMBOL
- 105 — ROOM NUMBER
- 9'-6" — APPROXIMATE ELEVATION FROM FLOOR TO BOTTOM OF DUCT, PIPE OR EQUIPCHMENT ITEM
- A / M1-1 — SECTION "A" DESIGNATION, SHOWN ON SHEET H1
- 21 / H33 — DETAIL REFERENCE SYMBOL, DETAIL "A" SHOWN ON SHEET H1
- E1-22"x22" 1200 — CEILING MOUNTED AIR DEVICE, E1- AIR DEVICE DESIGNATION. REFER TO SCHEDULE. 22"x22" NECK SIZE, 1,200 REQUIRED CFM. DUCT SIZE SAME AS NECK SIZE UNLESS INDICATED OTHERWISE.
- R1-22"x22" 1200 — CEILING MOUNTED AIR DEVICE, R1- AIR DEVICE DESIGNATION. REFER TO SCHEDULE. 22"x22" NECK SIZE, 1,200 REQUIRED CFM. DUCT SIZE SAME AS NECK SIZE UNLESS INDICATED OTHERWISE.
- 2-WAY SUPPLY DIFFUSER
- S1-10"x6" 200-7'-6" — WALL OR DUCT MOUNTED AIR DEVICE, S1 AIR DEVICE DESIGNATION. REFER TO SCHEDULE. 10"x6" NECK SIZE, 200-REQUIRED CFM, 7'-6" MOUNTING HEIGHT FROM FLOOR TO BOTTOM OF AIR DEVICE. BRANCH DUCT SIZE SAME AS NECK SIZE UNLESS INDICATED OTHERWISE.
- MANUAL BALANCING VOLUME DAMPER WITH LOCKING DEVICE
- u/c — 1" DOOR UNDER CUT
- EXISTING TO REMAIN
- NEW WORK
- DEMOLITION OF DUCTWORK, PIPING, EQUIPMENT ETC.
- R — DUCT RISE IN DIRECTION OF AIR FLOW 45° OFFSET
- D — DUCT DROP IN DIRECTION OF AIR FLOW 45° OFFSET
- LINED DUCTWORK
- DOUBLE WALL DUCT WITH 1" INSULATION PERFORATED LINER
- FLEXIBLE DUCT CONNECTION
- AIR TURNING VANES
- AIR TRANSFER ASSEMBLY
- FD — FIRE DAMPER AND CONFIGURATION TYPE
- FD — EXISTING FIRE DAMPER
- SD — SMOKE DAMPER
- SD — EXISTING SMOKE DAMPER
- SD FD — COMBINATION SMOKE/FIRE DAMPER AND CONFIGURATION TYPE
- E SD FD E — EXST. COMBINATION SMOKE/FIRE DAMPER AND CONFIG. TYPE
- M — MOTOR OPERATED DAMPER (OPPOSED)
- M — MOTOR OPERATED DAMPER (PARALLEL)
- T — DUCT TEMPERATURE SENSOR
- H — DUCT HUMIDITY SENSOR
- L — DUCT HUMIDITY HIGH LIMIT SENSOR
- F — DUCT AIR FLOW SENSOR
- DUCT STATIC PRESSURE SENSOR
- MEDIUM PRESSURE CONICAL LOW LOSS DUCT TEE
- LOW PRESSURE BELL MOUTH WITH LOCKING QUADRANT DAMPER
- SUPPLY AND OR OUTSIDE AIR DUCT DROP
- RETURN, EXHAUST AND OR RELIEF AIR DROP
- SUPPLY AND OR OUTSIDE AIR RISE
- RETURN, EXHAUST AND OR RELIEF AIR RISE
- SINGLE LINE DUCT TRANSITION
- VRV SYSTEM BRANCH SELECTOR BOX

HVAC LEGEND (ALL MAY NOT APPLY)

- PRESSURE GAUGE WITH SHUTOFF COCK SNUBBER REQUIRED FOR STEAM SERVICE
- THERMOMETER
- T — THERMOSTATIC AIR VENT
- M — MANUAL AIR VENT WITH SHUTOFF COCK
- A — AUTOMATIC AIR VENT WITH SHUTOFF COCK, VENT TO DRAIN
- WATER TEMPERATURE SENSOR
- DP — VARIABLE SPEED PUMPING DIFFENTIAL PRESSURE SENSOR
- M — METER
- FLEXIBLE CONNECTOR
- UNION
- CO — CLEAN OUT
- STRAINER WITH BLOW DOWN
- SHUTOFF/ISOLATION VALVE
- COMBINATION BALANCING/SHUTOFF VALVE
- CHECK VALVE
- THREE WAY CONTROL VALVE
- TWO WAY CONTROL VALVE
- TRIPLE DUTY VALVE
- 3/4" NPT PETES PLUG
- PRESSURE REDUCING VALVE
- OS&Y VALVE
- SOLENOID VALVE
- GLOBE VALVE
- 30 — PRESSURE RELIEF VALVE WITH INDICATED SETTING
- FILL VALVE
- BALL VALVE
- BUTTERFLY VALVE
- PLUG VALVE
- CIRCUIT SETTER
- NEEDLE VALVE
- AUTOMATIC FLOW CONTROL VALVE WITH SHUTOFF
- FLOW CONTROL VALVE
- FS — FLOW SWITCH
- VB — VACUUM BREAKER
- PIPE FLANGE
- CONCENTRIC PIPE REDUCER
- ECCENTRIC PIPE REDUCER
- VENTURI FLOW METER
- PIPE CAP
- PIPE DROP
- PIPE RISE
- PIPE TEE UP
- PIPE TEE DOWN
- VALVE IN RISER
- PIPE ANCHOR
- PIPE GUIDE
- PIPE EXPANSION JOINT
- PD — PRESSURE DIFFERENTIAL SWITCH WITH SHUTOFF COCK
- F&T TRAP
- BUCKET TRAP
- PITCH DOWN
- DIRECTION OF FLOW
- PRE ENGINEERED EXPANSION LOOP. SEE SPECIFICATIONS

HVAC LEGEND (ALL MAY NOT APPLY)

- D — DRAIN PIPE
- (C)E — EXISTING STEAM CONDENSATE (GRAVITY RETURN)
- C — STEAM CONDENSATE (GRAVITY RETURN)
- (CPD)E — EXISTING PUMPED CONDENSATE
- CPD — PUMPED CONDENSATE
- (CR)E — EXISTING CONDENSER WATER RETURN
- CS — CONDENSER WATER SUPPLY
- CR — CONDENSER WATER RETURN
- (CS)E — EXISTING CONDENSER WATER SUPPLY
- CWR — CHILLED WATER RETURN
- (CWR)E — EXISTING CHILLED WATER RETURN
- CWS — CHILLED WATER SUPPLY
- (CWS)E — EXISTING CHILLED WATER SUPPLY
- (LPR)E — EXISTING LOW PRESSURE RETURN
- LPR — LOW PRESSURE RETURN
- (MPR)E — EXISTING MEDIUM PRESSURE RETURN
- MPR — MEDIUM PRESSURE RETURN
- (HPR)E — EXISTING HIGH PRESSURE RETURN
- HPR — HIGH PRESSURE RETURN
- (15)E — EXISTING STEAM SUPPLY (VALUE INDICATES PRESSURE)
- 15 — STEAM SUPPLY (VALUE INDICATES PRESSURE)
- (HWR)E — EXISTING HOT WATER RETURN
- HWR — HOT WATER RETURN
- (HWS)E — EXISTING HOT WATER SUPPLY
- HWS — HOT WATER SUPPLY
- (MUW)E — EXISTING MAKE UP WATER
- MUW — MAKE UP WATER
- RL — REFRIGERANT LIQUID
- RHGBP — REFRIGERANT HOT GAS BYPASS LINE
- RD — REFRIGERANT DISCHARGE
- RS — REFRIGERANT SUCTION
- PC — PUMPED CONDENSATE
- PCR — PUMPED CONDENSATE RETURN

HVAC GENERAL NOTES

A.- PROVIDE ALL MATERIALS AND EQUIPMENT AND PERFORM ALL LABOR REQUIRED TO INSTALL COMPLETE AND OPERABLE MECHANICAL SYSTEMS AS INDICATED ON THE DRAWINGS AND AS SPECIFIED.

B.- ALL WORK SHALL BE INSTALLED ACCORDING TO THE LATEST LOCAL, STATE AND NATIONAL CODES. ALL DUCTWORK SHALL BE INSTALLED ACCORDING TO THE LATEST ASHRAE RECOMMENDATIONS AND SMACNA INSTALLATION MANUALS.

C.- CONTRACT DOCUMENT DRAWINGS FOR MECHANICAL WORK ARE DIAGRAMATIC AND ARE INTENDED TO CONVEY SCOPE AND GENERAL ARRANGEMENT ONLY.

D.- PROVIDE VIBRATION ISOLATION FOR ALL MECHANICAL EQUIPMENT TO PREVENT TRANSMISSION OF VIBRATION TO BUILDING STRUCTURE.

E.- PROVIDE VIBRATION ISOLATORS FOR ALL PIPING SUPPORTS CONNECTED TO AND WITHIN 50 FEET OF ISOLATED EQUIPMENT THROUGHOUT MECHANICAL EQUIPMENT ROOMS.

F.- COORDINATE CONSTRUCTION OF ALL MECHANICAL WORK WITH ARCHITECTURAL, STRUCTURAL, CIVIL, ELECTRICAL WORK, ETC., SHOWN ON OTHER CONTRACT DOCUMENT DRAWINGS.

G.- MAINTAIN A MINIMUM OF 6'-8" CLEARANCE TO UNDERSIDE OF PIPES, DUCTS, CONDUITS, SUSPENDED EQUIPMENT, ETC., THROUGHOUT ACCESS ROUTES IN MECHANICAL ROOMS.

H.- CAULK SPACE BETWEEN SLEEVES, DUCTS AND PIPES WHERE DUCTS AND PIPES PASS THROUGH WALLS. CAULKING TO BE AIRTIGHT.

I.- ALL TESTS SHALL BE COMPLETED BEFORE ANY MECHANICAL EQUIPMENT OR PIPING INSULATION IS APPLIED.

J.- COORDINATE OPENINGS THROUGH OUTSIDE WALLS, LINTELS FOR LOUVERS WITH STRUCTURAL AND ARCHITECTURAL REQUIREMENTS.

K.- COORDINATE ALL EQUIPMENT CONNECTIONS WITH MANUFACTURERS' CERTIFIED DRAWINGS. COORDINATE AND PROVIDE ALL DUCT AND PIPING TRANSITIONS REQUIRED FOR FINAL EQUIPMENT CONNECTONS TO FURNISHED EQUIPMENT. FIELD VERIFY AND COORDINATE ALL DUCT AND PIPING DIMENSIONS BEFORE FABRICATION.

L.- MINIMUM CONCRETE PAD THICKNESS SHALL BE 4 INCHES FOR INTERIOR EQUIPMENT, 6 INCHES FOR EXTERIOR EQUIPMENT. PAD SHALL EXTEND BEYOND THE EQUIPMENT A MINIMUM OF 4 INCHES ON EACH SIDE, WITH BEVELED EDGES.

M.- PROVIDE INSULATED SUBBASES ON ALL THERMOSTATS/TEMPERATURE SENSORS LOCATED ON EXTERIOR WALLS.

N.- INLET DUCTWORK TO DIFFUSERS SHALL BE SAME SIZE AS DIFFUSER NECK SIZE UNLESS NOTED OTHERWISE. INLET DUCTWORK TO AIR TERMINAL BOXES SHALL BE SAME SIZE AS BOX INLET UNLESS NOTED OTHERWISE.

O.- ALL MISCELLANEOUS STEEL REQUIRED TO ENSURE PROPER INSTALLATION AND AS SHOWN IN DETAILS FOR PIPING, DUCTWORK AND EQUIPMENT (UNLESS NOTED OTHERWISE) SHALL BE FURNISHED AND INSTALLED BY THE CONTRACTOR.

P.- PROVIDE PROPERLY SIZED ACCESS PANELS FOR INSTALLATION IN WALLS AND CEILINGS, WHERE REQUIRED, TO SERVICE DAMPERS, VALVES, SMOKE DETECTORS, AND OTHER CONCEALED MECHANICAL EQUIPMENT.

Q.- ALL DUCTWORK, PIPING AND EQUIPMENT SUPPORTED FROM STRUCTURAL STEEL SHALL BE COORDINATED WITH STRUCTURAL REQUIREMENTS. ALL ATTACHMENTS TO STEEL BAR JOISTS, TRUSSES OR JOIST GIRDERS SHALL BE AT PANEL POINTS. PROVIDE BEAM CLAMPS MEETING MSS STANDARDS. WELDING TO STRUCTURAL MEMBERS SHALL NOT BE PERMITTED. THE USE OF C-CLAMPS SHALL NOT BE PERMITTED.

R.- LOCATION AND SIZED OF ALL FLOOR, WALL AND ROOF OPENINGS SHALL BE COORDINATED IWTH ALL OTHER TRADES INVOLVED.

S.- ALL OPENINGS IN FIRE WALLS DUE TO DUCTWORK, PIPING, CONDUIT, ETC., SHALL BE FIRE STOPPED. SEE SPECIFICATIONS FOR REQUIREMENTS. FIRE RATED WALL TO HAVE FIRE DAMPERS IN ALL DUCT PENETRATIONS.

T.- ALL AIR CONDITIONING CONDENSATE DRAIN LINES FROM EACH AIR HANDLING UNIT SHALL BE PIPED FULL SIZE OF THE UNIT DRAIN OUTLET, WITH P-TRAP, AND PIPED TO NEAREST DRAIN. PROVIDE CONDENSATE TRAP AS REQUIRED.

U.- MAINTAIN A MINIMUM OF 3'-0" OF GROUND COVER OVER ALL UNDERGROUND PIPING.

V.- PROVIDE AN AIR VENT AT THE HIGH POINT OF EACH DROP IN CLOSED WATER PIPING SYSTEMS. ALL PIPING SHALL GRADE TO LOW POINTS. PROVIDE HOSE END DRAIN VALVES AT THE BOTTOM OF ALL RISERS AND LOW POINTS.

W.- UNLESS OTHERWISE NOTED, ALL PIPING IS OVERHEAD, TIGHT TO UNDERSIDE OF STRUCTURE OR SLAB, WITH SPACE FOR INSULATION WHERE REQUIRED IN THE SPECIFICATIONS.

X.- INSTALL PIPING SO THAT ALL VALVES, STRAINERS, UNIONS, TRAPS, FLANGES AND OTHER APPURTENANCES REQUIRING ACCESS ARE ACCESSIBLE.

Y.- ALL BALANCING VALVES AND BUTTERFLY VALVES SHALL BE PROVIDED WITH POSITION INDICATORS AND MAXIMUM ADJUSTABLE STOPS (MEMORY STOPS).

Z.-PROVIDE CHAINWHEEL OPERATORS FOR ALL VALVES IN EQUIPMENT ROOMS MOUNTED GREATER THAN 7'-0" ABOVE FLOOR LEVEL; CHAIN SHALL EXTEND TO 7'-0" ABOVE FLOOR LEVEL.

AA.-UNIONS AND/OR FLANGES SHALL BE INSTALLED AT EACH PIECE OF EQUIPMENT, IN BYPASSES, AND IN LONG PIPING RUNS (100 FEET OR MORE) TO PERMIT DISASSEMBLY FOR ALTERATIONS AND REPAIRS.

BB.-ALL PIPING WORK AND DUCTWORK SHALL BE COORDINATED WITH ALL TRADES INVOLVED. OFFSETS IN PIPING AND DUCTS AROUND OBSTRUCTIONS SHALL BE PROVIDED AT NO ADDITIONAL COST TO THE OWNER.

CC.-CERTAIN ITEMS SUCH AS RISES AND DROPS IN DUCTWORK, ACCESS DOORS, VOLUME DAMPERS, ETC., ARE INDICATED ON THE CONTRACT DOCUMENT DRAWINGS FOR CLARITY FOR A SPECIFIC LOCATION REQUIREMENT AND SHALL NOT BE INTERPRETED AS THE EXTEND OF THE REQUIREMENTS FOR THESE ITEMS.

DD.-ALL DUCTWORK DIMENSIONS, AS SHOWN ON THE DRAWINGS, ARE INTERNAL CLEAR DIMENSIONS AND DUCT SIZE SHALL BE INCREASED TO COMPENSATE FOR DUCT LINING THICKNESS.

EE.- PROVIDE 90 DEGREE SQUARE ELBOWS WITH DOUBLE RADIUS TURNING VANES UNLESS OTHERWISE INDICATED.

FF.- COORDINATE DIFFUSER, REGISTER AND GRILLE LOCATIONS WITH ARCHITECTURAL REFLECTED CEILING PLANS, LIGHTING AND OTHER CEILING ITEMS AND MAKE MINOR DUCT MODIFICATIONS TO SUIT.

GG.- PROVIDE MINIMUM 4" FLEXIBLE CONNECTIONS IN ALL DUCTWORK SYSTEMS (SUPPLY, RETURN AND EXHAUST) CONNECTED TO AIR HANDLING UNITS, FANS AND OTHER EQUIPMENT WHICH REQUIRE VIBRATION ISOLATION. FLEXIBLE CONNECTIONS SHALL BE PROVIDED AT THE POINT OF CONNECTION TO THE EQUIPMENT UNLESS OTHERWISE INDICATED.

HH.- UNLESS OTHERWISE NOTED, ALL DUCTWORK IS OVERHEAD, TIGHT TO THE UNDERSIDE OF STRUCTURE, WITH SPACE FOR INSULATION WHERE REQUIRED IN THE SPECIFICATIONS.

II.- RUNS OF FLEXIBLE DUCT SHALL NOT EXCEED 7 FEET AND SHALL NOT BE USED FOR 90 DEGREE BENDS.

JJ.- PROVIDE ACCESS DOORS IN DUCTWORK FOR ACCESS TO ALL SMOKE DETECTORS, FIRE DAMPERS, SMOKE DAMPERS, VOLUME DAMPERS, COILS AND OTHER ITEMS LOCATED IN THE DUCTWORK WHICH REQUIRE SERVICE AND/OR INSPECTION.

KK.- CONTRACTOR TO PROVIDE FIRE STOPPING AT ALL RATED HORIZONTAL AND VERTICAL ASSEMBLIES. CONTRACTOR SHALL NOT LEAVE OPENINGS UNPROTECTED DURING THE CONSTRUCTION PERIOD EXCEPT FOR SHORT DURATIONS WHILE ITEMS ARE BEING INSTALLED THROUGH OPENINGS

LL.- ALL 12"x12" DIFFUSERS ARE TO BE INSTALLED IN CENTER OF CEILING TILE.

MM.-FURNISH AND INSTALL ISOLATION VALVES AND PIPE CAPS IN PIPING AS REQUIRED FOR PHASING OF ALL WORK.

NN.-INSTALL VANDAL-PROOF COVERS ON ALL THERMOSTATS IN STORAGE,CORRIDORS, AND COMMON AREAS.

MRI PENETRATION DETAIL | 1

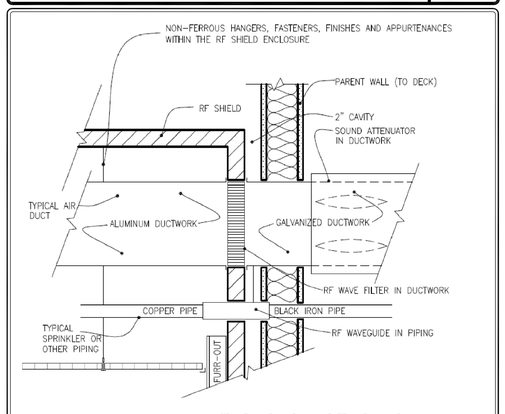

NOTE: RF WAVEGUIDES AND FILTERS FURNISHED AND INSTALLED BY RF SHIELDING SUPPLIER. DUCTWORK, PIPING, WIRING AND CONDUIT INSTALLATION MUST BE CAREFULLY COORDINATED BETWEEN CONTRACTOR'S FORCE AND THE RF SHIELD VENDOR, IN ACCORDANCE WITH THE MRI MANUFACTURER'S SITE PREPARATION REQUIREMENTS.

RF SHIELDING PENETRATION DETAIL

DESIGNER/ENGINEER SH
CAD OPERATOR SH
CADD/CHECKER BL

Revisions	Date
ISSUED FOR BID	02/28/2012
PRE-BID AMENDMENT, REV 1	04/26/2012
PRE-BID AMENDMENT	05/10/2012

Dynamix Engineering Ltd.
Facility Engineering Consultants
855 Grandview Avenue, Third Floor Columbus, Ohio 43215
Phone: (614)443-1178 · Fax: (614)443-1594 · Email: dynamix@dynamix-ltd.com
Comm. No.: 110028

STATE OF OHIO — MACE E-50556 — MONTGOMERY E-6852 — GRIFFIN E-57049 — REGISTERED PROFESSIONAL ENGINEERS

Professional Seal

Revised By:

Drawing Title	MECHANICAL SCHEDULES AND DETAILS — SCALE: NONE
Project Title	OPEN MRI SITE PREP
Date	02-28-2012
Project No.	552-CSI-101
Approved: Project Manager	RANDI FIORINA
Building Number	335
Checked	DYNAMIX
Drawn	SH
Drawing No.	M0-00
Approved: Service Chief	GARY ABREU
Location	4100 WEST THIRD STREET DAYTON, OH 45428

VAMC, DAYTON

VA Department of Veterans Affairs

VA FORM 08-6231, OCT 1978

STEAM HEATING DUCT COILS

TAG	COIL TYPE	CFM	TOTAL MBH	LBS/HR	PD FT HD	RUN OUT SIZE(IN)	APD (IN WC)	WPD (FT)	NO OF ROWS	FACE DIMENSIONS	EAT °F DB	EAT °F WB	LAT °F DB	LAT °F WB	REQ'D ACCESS
SC-1	IFB	1100	85.9	77.9	-	1	-	-	1	15"x14"	0	-	100	-	1
-	-	-	-	-	-	-	-	-	-	-	-	-	-	-	-
-	-	-	-	-	-	-	-	-	-	-	-	-	-	-	-

REQ'D ACCESS
1. INTEGRAL FACE AND BYPASS COIL

GRAVITY ROOF VENTILATORS

TAG	DESCRIPTION	SERVICE	CFM	PD (IN)	THROAT AREA (SF)	THROAT SIZE (IN)	THROAT VEL (FPM)	TIERS	MFR	MODEL	REQ'D ACCESS
IH-1	ROUND INTAKE HOOD	INTAKE	1100	0.05	2.18	20"Ø	412	1	-	-	1,2,3,4
-	-	-	-	-	-	-	-	-	-	-	-
-	-	-	-	-	-	-	-	-	-	-	-
-	-	-	-	-	-	-	-	-	-	-	-

REQ'D ACCESS
1. ALUMINUM CONSTRUCTION WITH ENAMEL FINISH
2. 85% ALUMINUM BIRDSCREEN
3. 12" HIGH INSULATED ROOF CURB
4. MOTORIZED DAMPER - WIRE TO OPEN WHEN ERV-1 OPERATES.

CONDENSATE RECEIVER PUMP

TAG	DESCRIPTION	GPM	DISCH PRESS PSI	RPM	DISCH SIZE(IN)	INLET SIZE	RECIEVER CAP(GAL)	ELECTRICAL DATA HP	VOLTAGE	PHASE	REQ'D ACCESS
CP-1	CONDENSATE RETURN	7	30	3450	1"	2"	15	1/2	120	1	1,2,3,4,5

REQ'D ACCESS
1. INLET BASKET STRAINER
2. DISCHARGE PRESSURE GAUGE
3. MECHANICAL ALTERNATOR (FLOW SWITCH INSIDE RECEIVER)
4. PUMP SUCTION ISOLATION VALVES
5. PROVIDE VIBRATION ISOLATION AS RECOMMENDED BY UNIT MANUFACTURER.

STEAM HUMIDIFIERS

- CAPACITY BASED ON 30 PSI STEAM

TAG	DESCRIPTION	SERVICE	LOAD (lb/hr)	SUPPLY CONN(IN)	COND RUNOUT	CFM	NOTES
H-1	STEAM DISPERSION PANEL	MRI ROOM	9.5	3/4"	3/4"	1130	ALL
-	-	-	-	-	-	-	-
-	-	-	-	-	-	-	-

NOTES
1. CAPACITY BASED ON LOAD SUPPLIED INTO AIRSTREAM.
2. ~~INSULATED TUBES~~
3. HUMIDISTAT, DUCT MOUNTED IN RETURN

ELECTRIC HEATING UNITS

- VERIFY/COORDINATE CABINET DIMENSIONS MOUNTING AND RECESS REQUIREMENTS WITH ARCHITECTURAL DWGS PRIOR TO ORDERING
- THREE (3) PHASE COIL LOADS SHALL BE DIVIDED EVENLY ACROSS EACH PHASE
- ELEC SERVICE TO THREE (3) PHASE UNITS TO BE THREE (3) WIRE UNLESS NOTED

TAG	DESCRIPTION	SERVICE	CFM	HEATING MBH	HEATING KW (MIN)	HEATING KW (MAX)	ELEC SERVICE AMP	VOLT	PHASE	REQ'D ACCESS
CUH-1	ELECT. CABINET UNIT HEATER	VESTIBULE	250	17	3	5	25	208	3	1
EWH-1	ELECT. WALL HEATER	MECH. ROOM	100	5110	1.5	1.5	12.5	120	1	2
-	-	-	-	-	-	-	-	-	-	-
-	-	-	-	-	-	-	-	-	-	-
-	-	-	-	-	-	-	-	-	-	-

REQ'D ACCESS
1. DUCT COLLAR FOR INLINE AIRFLOW (UNIT TO BE MOUNTED HORIZONTALLY, BACK IN/FRONT OUT CONFIGURATION) , 2 STAGE HEAT, WALL-MOUNTED THERMOSTAT. PROVIDE VIBRATION ISOLATION PER SPEC SECTION 23 05 41.
2. ~~SURFACE MOUNTING FRAME, UNIT MOUNTED 120-V THERMOSTAT,~~ THERMAL CUT-OUT.

CONDENSING UNITS

- DISCONNECT BY ELECTRICAL CONTRACTOR
- R-410A REFRIGERANT
- HEATING CAPACITY BASED ON INDOOR CONDITIONS OF 70.0°F DB AND OUTDOOR CONDITIONS OF 0.0°F DB / 0.0°F WB
- COOLING CAPACITY BASED ON INDOOR CONDITIONS OF 80.0°F DB / 67.0°F WB AND OUTDOOR CONDITIONS OF 95.0°F DB

TAG	SERVICE	REFRIG. LINE SIZES (LIQUID / DISCHARGE / SUCTION / BAL. TUBE)	CAPACITY (BTU/Hr) COOLING	HEATING	ELECTRICAL DATA VOLTS	PHASE	MCA	MOCP	REFRIG. SUCT. TEMP.	NO. OF CIRCUITS	REQ'D ACCESS.
CU-1	MRI BUILDING	MFR. TO SIZE	144,000	162,000	208	3	72.2	80	-	1	1,2,4,6
CU-2	MRI BUILDING	MFR. TO SIZE	144,000	162,000	208	3	72.2	80	-	1	1,2,4,6
CU-3	CORRIDOR	MFR. TO SIZE	24,000	30,000	208	1	16.5	20	-	1	1,3,5
CU-4	DATA ROOM	MFR. TO SIZE	24,000	30,000	208	1	16.5	20	-	1	1,3,5
CU-5	ELECT. ROOM	MFR. TO SIZE	12,000	-	208	1	8.3	15	-	1	1,3,5

REQ'D ACCESS.
1. - COMPRESSOR TO BE MOUNTED ON RUBBER IN SHEAR ISOLATORS.
2. - UNIT IS HEAT RECOVERY CONDENSING UNIT WITH INVERTER. INCLUDE R410A REFRIGERANT, HEATING OPERATION TO 0° F, VFD CONTROLLED OUTDOOR FAN MOTOR, CONTINUOUS HEATING DURING DEFROST, MANIFOLDING KIT
3. - SINGLE POINT POWER CONNECTION.
4. - CONDENSING UNIT IS A COMBINATION OF TWO CONDENSING UNITS. EACH INDIVIDUAL CONDENSING UNIT REQUIRES AN ELECTRICAL FEED, WIRE PER MANUFACTUERS INSTRUCTIONS.
5. - INSTALL UNIT ON VIBRATION ISOLATION PADS (MIN. 1/4" DEFLECTION) FURNISHED BY UNIT MANUFACTURER.
6.-CONDENSING UNIT SIZING IS BASED ON CONDENSING UNITS BEING ABLE TO PROVIDE FOR 120% OF THE MAXIMUM CONNECTED LOAD. MFR SHALL ADJUST SIZING BASED ON THEIR CONDENSING UNIT'S PERFORMANCE.

VRV FAN COIL UNITS - MASTER SCHEDULE

- HEATING CAPACITY BASED ON INDOOR CONDITIONS OF 70.0°F DB AND OUTDOOR CONDITIONS OF 0°F DB / 0°F WB
- COOLING CAPACITY BASED ON INDOOR CONDITIONS OF 80.0°F DB / 67.0°F WB AND OUTDOOR CONDITIONS OF 95.0°F DB

TAG	TYPE	SERVED BY	CFM E.S.P. (IN. WC.)	CAPACITY (MBH) COOLING	HEATING	REFRIG. LINE SIZES LIQUID	GAS	ELECTRICAL DATA VOLT	PHASE	WATT	MOCP	REQ'D ACCESS
FC-1	CEIL. MOUNTED DUCTED UNIT	CU-1, CU-2	1377/1165/988 0.6	48	54	3/8	5/8	208	1	350	15	1,2,3,4,5,6,7
FC-2	CEIL. MOUNTED DUCTED UNIT	CU-1, CU-2	688/618/565 0.6	24	27	3/8	5/8	208	1	350	15	1,2,3,4,5,6,7
FC-3	CEIL. MOUNTED DUCTED UNIT	CU-1, CU-2	317/264/229 0.6	7.5	8.5	1/4	1/2	208	1	90	15	1,2,3,4,5,6,7
FC-4	CEIL. MOUNTED DUCTED UNIT	CU-1, CU-2	317/264/229 0.6	7.5	8.5	1/4	1/2	208	1	90	15	1,2,3,4,5,6,7
FC-5	CEIL. MOUNTED DUCTED UNIT	CU-1, CU-2	317/264/229 0.6	7.5	8.5	1/4	1/2	208	1	90	15	1,2,3,4,5,6,7
FC-6	CEIL. MOUNTED DUCTED UNIT	CU-1, CU-2	317/264/229 0.6	7.5	8.5	1/4	1/2	208	1	90	15	1,2,3,4,5,6,7
FC-7	CEIL. MOUNTED DUCTED UNIT	CU-1, CU-2	317/264/229 0.6	7.5	8.5	1/4	1/2	208	1	90	15	1,2,3,4,5,6,7
FC-8	CEIL. MOUNTED DUCTED UNIT	CU-1, CU-2	317/264/229 0.6	7.5	8.5	1/4	1/2	208	1	90	15	1,2,3,4,5,6,7
FC-9	WALL MOUNTED DUCTLESS UNIT	CU-4	688/618/565 0.6	24	27	1/4	1/2	208	1	350	15	1,2,3,4,5,6,7
FC-10	CEIL. MOUNTED DUCTED UNIT	CU-1, CU-2	1377/1165/988 0.6	48	54	3/8	5/8	208	1	350	15	1,2,3,4,5,6,7
FC-11	CEIL. MOUNTED DUCTED UNIT	CU-1, CU-2	688/618/565 0.6	24	27	3/8	5/8	208	1	350	15	1,2,3,4,5,6,7
FC-12	CEIL. MOUNTED DUCTED UNIT	CU-1, CU-2	1130/953/812 0.6	36	40	3/8	5/8	208	1	350	15	1,2,3,4,5,6,7
FC-13	CEIL. MOUNTED DUCTED UNIT	CU-1, CU-2	317/264/229 0.6	7.5	8.5	1/4	1/2	208	1	90	15	1,2,3,4,5,6,7
FC-14	CEIL. MOUNTED DUCTED UNIT	CU-1,CU-2	317/264/229 0.6	12	13.5	1/4	1/2	208	1	84	15	1,2,3,4,5,6,7
FC-15	CEIL. MOUNTED DUCTED UNIT	CU-1,CU-2	317/264/229 0.6	12	13.5	1/4	1/2	208	1	84	15	1,2,3,4,5,6,7
FC-16	SLIM CEIL. MOUNTED DUCTED UNIT	CU-3	1130/953/812 0.6	36	40	3/8	5/8	208	1	350	15	1,2,3,4,5,6,7,8
FC-17	SLIM CEIL. MOUNTED DUCTED UNIT	CU-1,CU-2	580/460 0.375	24	27	3/8	5/8	208	1	350	15	1,2,3,4,5,6,7,8
FC-18	CEIL. MOUNTED DUCTED UNIT	CU-1,CU-2	317/264/229 0.6	12	13.5	1/4	1/2	208	1	84	15	1,2,3,4,5,6,7
FC-19	SLIM CEIL. MOUNTED DUCTED UNIT	CU-1,CU-2	580/460 0.375	24	27	1/4	1/2	208	1	350	15	1,2,3,4,5,6,7,8
FC-20	WALL MOUNTED DUCTLESS UNIT	CU-5	580/460 0.375	12	-	1/4	3/8	208	1	84	15	1,2,3,4,5,6,7

REQ'D ACCESS.
1. ALL TEMPERATURE SENSORS AND FC CONTROLS SHALL BE PROVIDED BY THE UNIT MANUFACTURER.
2. DIRECT EXPANSION COIL PACKAGE WITH FACTORY MOUNTED THERMAL EXPANSION VALVE AND EQUALIZING TUBE.
3. R-I-S VIBRATION ISOLATORS.
4. PROVIDE (1) SOLENOID VALVE KIT PER DX FAN COIL.
5. UL LISTED
6. PROVIDE FACTORY MOUNTED CONDENSATE PUMP
7. WASHABLE FILTER
8. UNIT SHALL NOT EXCEED 8" IN HIEGHT

FANS

FAN TYPES:
- PRV - POWER ROOF VENTILATOR
- IL - INLINE CENTRIFUGAL
- ILD - INLINE DUCT BLOWER
- CE - CEILING MOUNTED EXHAUST
- US - UTILITY SET
- SWV - SIDEWALL VENTILATOR
- PFSF - PENTHOUSE FILTERED SUPPLY FAN
- UBE - UP BLAST EXHAUSTER
- PF - PLENUM FAN
- SWP - SIDEWALL PROPELLER
- HPRE - HOODED PROPELLER ROOF EXHAUSTER

TAG	TYPE	SERVICE / LOCATION	CFM	ESP (IN)	MAX SONES	WHEEL DIA(IN)	RPM	MOTOR DATA HP(WATTS)	VOLTAGE	PHASE	MFG.	MODEL	FAN CONTROL	REQ'D ACCY
EF-1	PRV	EMERG. EF/ MRI ROOM	1200	0.50	11.5	14.5	1725	1/3	120	1	-	-	41	1,2,9
-	-	-	-	-	-	-	-	-	-	-	-	-	-	-
-	-	-	-	-	-	-	-	-	-	-	-	-	-	-
-	-	-	-	-	-	-	-	-	-	-	-	-	-	-

REQ'D ACCY:
1.- STANDARD DISCONNECT, FACTORY MOUNTED & WIRED
2.- GRAVITY BACKDRAFT DAMPER
3.- INLET/OUTLET FLEX DUCT FLANGES
4.- SPRING ISOLATORS
5.- STANDARD FINISH, COLOR BY ARCHITECT
6.- BAKED ENAMEL FINISH, COLOR BY ARCHITECT
7.- INLET GUARD
8.- R-I-S VIBRATION ISOLATION HANGERS
9.- 14" HIGH INSULATED ROOF CURB, COORDINATE WITH STRUCTURAL & GC WORK. ROOF CURB TO MATCH ROOF SLOPE.
10.- HINGED BASE
11.- UL 762 LISTING
12.- GREASE TERMINATOR
13.- STAINLESS STEEL BIRDSCREEN
14.- ELECTRONIC SPEED CONTROLLER
15.- LOCKABLE DISCONNECT, FACTORY MOUNTED AND WIRED

FAN CONTROL:
PROVIDED BY BAS CONTRACTOR:
21.- TIME SCHEDULED DDC ON/OFF
22.- WALL MOUNTED DDC SPACE SENSOR
23.- WALL MOUNTED THERMOSTAT - MOUNTED & WIRED BY EC
24.- UNIT MOUNTED THERMOSTAT - MOUNTED & WIRED BY EC
25.- HARDWIRE INTERLOCK ASSOCIATED MOTORIZED DAMPER WITH FAN
26.- HARDWIRE INTERLOCK FAN TO REFRIGERANT MONITOR PANEL

PROVIDED BY HC WITH UNIT:
31.- WALL MOUNTED THERMOSTAT - MOUNTED & WIRED BY EC
32.- UNIT MOUNTED THERMOSTAT - MOUNTED & WIRED BY EC
33.- INTEGRAL THERMOSTAT - FACTORY MOUNTED & WIRED

FAN CONTROL:
PROVIDED BY HC:
41.- WALL MOUNTED SWITCH
42.- WALL MOUNTED ELECTRONIC TIMER

AIR DISTRIBUTION DEVICES

OWBE - OFF WHITE BAKED ENAMEL FINISH ECL - ETCHED CLEAR LACQUER FINISH

TAG	DESCRIPTION	MODULE SIZE	MOUNTING TYPE LAY-IN	MOUNTING TYPE SURFACE	CONSTRUCTION TYPE ALUM.	CONSTRUCTION TYPE STEEL	FINISH O.W.B.E.	FINISH E.C.L.	FINISH BY ARCH.	TYPE	REQ'D ACCY
S1	SQUARE SUPPLY DIFFUSER	12"x12"	SEE ARCH. PLANS FOR CEIL. TYPE			●	●			SQUARE - PLAQUE	1
S2	SQUARE SUPPLY DIFFUSER	24"x24"	SEE ARCH. PLANS FOR CEIL. TYPE			●	●			SQUARE - PLAQUE	1
S3	SQUARE SUPPLY DIFFUSER	AS NOTED	SEE ARCH. PLANS FOR CEIL. TYPE			●	●			SQUARE - PLAQUE	1
S4	LINEAR SUPPLY	1" WIDE, 48"LONG, 1 SLOT	SEE ARCH. PLANS FOR CEIL. TYPE		●			●		LINEAR DIFFUSER	1,5
S5	SIDEWALL LINEAR SUPPLY	3" WIDE, 48"LONG DISCHARGE		●	●			●		LINEAR BAR DIFFUSER	1,4
S6	LINEAR SUPPLY	1" WIDE, 24"LONG, 1 SLOT	SEE ARCH. PLANS FOR CEIL. TYPE		●			●		LINEAR DIFFUSER	1,5
R1	RETURN	24"x24"	SEE ARCH. PLANS FOR CEIL. TYPE		●		●			EGGCRATE RETURN GRILLE	1
R2	RETURN	24"x12"	SEE ARCH. PLANS FOR CEIL. TYPE		●		●			EGGCRATE RETURN GRILLE	1
R3	RETURN	12"x12"	SEE ARCH. PLANS FOR CEIL. TYPE		●		●			EGGCRATE RETURN GRILLE	1
R4	CEIL. LINEAR RETURN	1" WIDE, 48"LONG, 1 SLOT	SEE ARCH. PLANS FOR CEIL. TYPE		●					LINEAR RETURN DIFFUSER	1,5
R5	SIDEWALL LINEAR RETURN	3" WIDE, 48"LONG INTAKE		●	●			●		LINEAR BAR DIFFUSER	1,4
E1	EXHAUST	24"x12"	SEE ARCH. PLANS FOR CEIL. TYPE		●		●			EGGCRATE RETURN GRILLE	1,3
E2	EXHAUST	12"x12"	SEE ARCH. PLANS FOR CEIL. TYPE		●		●			EGGCRATE RETURN GRILLE	-
E3	EXHAUST	AS NOTED	SEE ARCH. PLANS FOR CEIL. TYPE		●		●			EGGCRATE RETURN GRILLE	-

REQ'D ACCY:
1. OPPOSED BLADE DAMPER
2. 12"x12" TRIM RING, RAPID MOUNT
3. DAMPER TO BE ACCESSIBLE FROM FACE OF GRILLE.
4. 1/4" WIDE BORDER
5. INSTALL DIFFUSER-SIZE PLENUM ATTACHED TO LINEAR DIFFUSER.

DUCT CONSTRUCTION/SEALING

DUCT SYSTEM	SMACNA SP CONST	SMACNA SEAL CL	NOTES
			-
LOW VELOCITY SUPPLY	+1"	B	-
RETURN / RELIEF	-1"	C	-
GENERAL EXHAUST	-0.5"	C	-
OUTSIDE AIR	-0.5"	C	-
-	-	-	-

NOTES
1.-

LOUVERS

TAG	SERVICE	SIZE DP	SIZE W	SIZE H	CFM	P.D. IN	F.A. SQ. FT.	NOTES
L-1	EXHAUST	4"	24"	24"	1100	0.05	2.1	ALL
-	-	-	-	-	-	-	-	-
-	-	-	-	-	-	-	-	-

1.- CONTRACTOR SHALL PROVIDE INSULATED SHEETMETAL PLENUM BEHIND ALL LOUVERS.
2.- COLOR OF LOUVER SELECTED BY THE ARCHITECT.
3.- PROVIDE MOTORIZED DAMPER-WIRE TO OPEN WHEN ERV-1 OPERATES.

STEAM PRESSURE REDUCING VALVE AND RELIEF VALVE

TAG	STEAM PRESSURE REDUCING VALVE: INLET PRESSURE (PSI)	OUTLET PRESS. (PSI)	CAP'Y lb/hr	VALVE SIZE (IN)	REQUIRED CV	REQ'D ACCESS	RELIEF VALVE: VALVE SIZE (IN)	RELIEF PRESSURE SETTING (PSI)	CAP'Y lb/hr
PRV-1	125	68	1141	1-1/4	4.83	1,2	1-1/4	70	1182
PRV-2	68	30	1141	1-1/2	8.02	1,2	1-1/2	40	1551
-	-	-	-	-	-	-	-	-	-
-	-	-	-	-	-	-	-	-	-

REQ'D ACCESS
1. INCLUDE EXTERNAL STEAM PILOT CAPABLE OF +/- 1% ACCURACY.
2. NOISE LEVEL TO BE MAX. 85 DB.

PACKAGED ENERGY RECOVERY VENTILATOR AND MODULE UNITS

TYPE - AIR TO AIR - AA
- UNITS ARE TO BE PACKAGED, INDOOR TYPE

TAG	TYPE	SUMMER EXHAUST AIR CFM,ESP	EAT°F	LAT °F	SUMMER SUPPLY AIR CFM,ESP	EAT°F	LAT °F	WINTER EXH EAT°F	WINTER SUPPLY AIR EAT°F	LAT °F	EXH FAN E.S.P	H.P.	SUPPLY FAN E.S.P	H.P.	REQ'D ACCESS.
ERV-1	AA-HEAT WHEEL	1025	75 DB 50 %RH	87 DB 75 WB	1100	90 DB 77 WB	78 DB 66 WB	72 DB 35%RH	0	55/46	1.0	3/4	1.0	3/4	1,2,3,4
-	-	-	-	-	-	-	-	-	-	-					-
-	-	-	-	-	-	-	-	-	-	-					-
-	-	-	-	-	-	-	-	-	-	-					-

REQ'D ACCESS.
1. ~~INCLUDE 2" MERV 6 PLEATED INTAKE FILTER AND 2" MERV 6 PLEATED EXHAUST FILTER~~
2. INCLUDE ELECTRIC HEATING COIL FROST PREVENTION PROTECTION.
3. ~~UNIT WEIGHT: 250 LBS.~~
4. ~~208/3/60 ELECTRIC~~
5. PROVIDE SINGLE POINT POWER CONNECTION.

Revisions	Date
ISSUED FOR BID	02/28/2012
PRE-BID AMENDMENT, REV 1	04/26/2012
PRE-BID AMENDMENT	05/10/2012

Dynamix Engineering Ltd.
Facility Engineering Consultants
855 Grandview Avenue, Third Floor Columbus, Ohio 43215
Phone: (614)443-1178 · Fax: (614)443-1594 · Email: dynamix@dynamix-ltd.com
Comm. No.: 110028

STATE OF OHIO — MACE E-50556, MONTGOMERY E-66852, GRIFFIN E-57049 — REGISTERED PROFESSIONAL ENGINEERS
Professional Seal

Revised By:

Drawing Title: MECHANICAL SCHEDULES AND DETAILS
SCALE: NONE
Project Title: OPEN MRI SITE PREP
Date: 02-28-2012
Project No.: 552-CSI-101
Approved: Project Manager RANDI FIORINA
Building Number: 335
Checked: DYNAMIX
Drawn: SH
Drawing No.: **M0-01**
Approved: Service Chief GARY ABREU
Location: 4100 WEST THIRD STREET DAYTON, OH 45428

VAMC, DAYTON
Department of Veterans Affairs
VA

VA FORM 08-6231, OCT 1978

Dynamix Engineering

855 Grandview Ave.
Columbus, OH 43215
USA

DATE: 12/01/11 PROJECT NO.: 110028

PROJECT: MRI Addition
CLIENT: Dayton Ohio - Veterans Affairs
DESIGNER: Isaac Claypool

DOAS-1 ASHRAE 62-2004 Ventilation Calculations

Room No.	Room	Area (Ft²)	Ceiling Height (Ft)	Room Population Type	People (Pz)	OA/ Person (Rp)	OA/ft² (Ra)	Distrib Effective (Ez)	Min OA A/C	Min OA CFM	Min Design OA (cfm)	People Vent (Vp)	Area Vent (Va)	Room OA (cfm) (Voz)	Min SA A/C (VA)	Min SA CFM (VA)	Min Design Supply (cfm)	Load Supply (cfm)	Design Supply (cfm)	Zone Min	Rm Vent Fraction (Zp)	Rm Vent Effective (Ez)	EA cfm	Exh (cfm)	Return (cfm)	Local Exh (cfm)	Air change cfm/ft²
CALCULATION																											
TOTALS		6,772			36							180	414	572		**space sum:**		-	1,095					808	1002		0.2
																coil peak:											
				System People (Ps):	36										Uncorrected OA				NA	**= Vou**							
				Diversity (D):	0.50										System OA Fraction				NA	**= Xs**							
															Max (Zp)				NA	**= Zd**							
															Min (Ev)				NA	**= Ev**							
															Air Handling Unit Supply (cfm)				**1,100**	**= Vs**							0.2
															Adjusted Unit Outside Air (cfm)				NA	**= Vot**							
																		Design OA>>	**1.100**		1.00	Design Relief>>	277				
ROOM SUMMARY																						R/O =	0.25				
	Vestibule	131	9	Vestibule	-	-	0.06	1.0	-	-	10	-	8	8		-	10		10	100%	79%	NA			10		0.1
	Waiting Area	547	9	Waiting Area	8	5	0.06	1.0	2	164	170	40	33	73	12	985	170		170	100%	43%	NA			162		0.3
	Reception	64	9	Office	1	5	0.06	1.0	2	19	20	5	4	9	10	96	20		20	100%	44%	NA			19		0.3
	Staff Workroom	89	9	Office	2	5	0.06	1.0	-	-	15	10	5	15		-	15		15	100%	102%	NA			14		0.2
	Toilet - Female	49	9	Restrooms	-	-	-	1.0	-	-	-	-	-	-	10	74	-			100%		NA	75	75			1.5
	Toilet - Male	48	9	Restrooms	-	-	-	1.0	-	-	-	-	-	-	10	72	-			100%		NA	75	75			1.6
	Toilet - Unisex	48	9	Restrooms	-	-	-	1.0	-	-	-	-	-	-	10	72	-			100%		NA	75	75			1.6
	Dressing Room 1	51	9	Office	1	5	0.06	1.0	2	15	15	5	3	8	6	46	15		15	100%	54%	NA			14		0.3
	Dressing Room 2	51	9	Office	1	5	0.06	1.0	2	15	15	5	3	8	6	46	15		15	100%	54%	NA			14		0.3
	Sub-Vault	342	9	Waiting Area	4	5	0.06	1.0	2	103	105	20	21	41	6	308	105		105	100%	39%	NA			100		0.3
	Inpatient Hold	88	9	Waiting Area	1	5	0.06	1.0	2	26	30	5	5	10	6	79	30		30	100%	34%	NA			29		0.3
	Control Room	246	9	Office	3	5	0.06	1.0	2	74	75	15	15	30	6	221	75		75	100%	40%	NA			71		0.3
	MRI Equipment Room	273	9	Storage	-	-	0.12	1.0	2	82	85	-	33	33	6	246	85		85	100%	39%	NA			81		0.3
	MRI Room	567	9	Procedure	3	5	0.06	1.0	2	170	170	15	34	49	12	1,021	170		170	100%	29%	NA			162		0.3
	Corridor - North	465	8	Corridor	-	-	0.06	1.0	-	-	30	-	28	28		-	30		30	100%	93%	NA			29		0.1
	Corridor - West	429	8	Corridor	-	-	0.06	1.0	-	-	30	-	26	26		-	30		30	100%	86%	NA			29		0.1
	Mechanical Room	120	9	Mechanical	-	-	0.06	1.0	-	-	10	-	7	7		-	10		10	100%	72%	NA			10		0.1
	Staff Lounge	165	9	Break Room	6	5	0.06	1.0	-	-	40	30	10	40		-	40		40	100%	100%	NA			38		0.2
	HAC	44	9	Mechanical	-	-	-	1.0		-	10	-	-	-		-	10		10	100%		NA	80	80			1.8
	Locker Room	103	9	Locker Room	-	-	-	1.0	-	-	10	-	-	-	10	155	10		10	100%		NA	150	150			1.5
	Shower	44	9	Shower	-	-	-	1.0	-	-	-	-	-	-	10	66	-			100%		NA	125	125			2.8
	Bio-Waste	20	9	Storage	-	-	0.12	1.0	-	-	10	-	2	2	10	30	10		10	100%	24%	NA	30	30			1.5
	Soiled Utilities	82	9	Storage	-	-	0.12	1.0	-	-	10	-	10	10	10	123	10		10	100%	98%	NA	123	123			1.5
	Toilet - Staff	48	9	Restrooms	-	-	-	1.0	-	-	-	-	-	-	10	72	-			100%		NA	75	75			1.6
	Corridor - Central	345	9	Corridor	-	-	0.06	1.0		-	25	-	21	21		-	25		25	100%	83%	NA			24		0.1
	Clean Supply	95	9	Storage	-	-	0.12	1.0		-	15	-	11	11	4	57	15		15	100%	76%	NA			14		0.2
	SPD Omni	31	9	Storage	-	-	0.12	1.0		-	10	-	4	4	4	19	10		10	100%	37%	NA			10		0.3
	Equipment Room	135	9	Storage	-	-	0.12	1.0		-	20	-	16	16	4	81	20		20	100%	81%	NA			19		0.1
	View-Consult	133	9	Office	2	5	0.06	1.0		-	20	10	8	18		-	20		20	100%	90%	NA			19		0.2
	Electric Room	124	9	Mechanical	-	-	-	1.0		-	-	-	-	-		-	-			100%		NA					
	Staff Radiologist	120	9	Office	2	5	0.06	1.0		-	20	10	7	17		-	20		20	100%	86%	NA			19		0.2
	Prof. Non-Phys.	120	9	Office	2	5	0.06	1.0		-	20	10	7	17		-	20		20	100%	86%	NA			19		0.2
	Data Room	124	9	Mechanical	-	-	0.06	1.0		-	10	-	7	7		-	10		10	100%	74%	NA			10		0.1
	Corridor - East	368	8	Corridor	-	-	0.06			-	25	-	22	-		-	25		25	100%		NA			24		0.1
	Connector - North	457	8	Corridor	-	-	0.06	1.0		-	30	-	27	27		-	30		30	100%	91%	NA			29		0.1
	Connector - South	608	8	Corridor	-	-	0.06	1.0		-	40	-	36	36		-	40		40	100%	91%	NA			38		0.1

ROOF MOUNTED PIPE SUPPORTS — 1

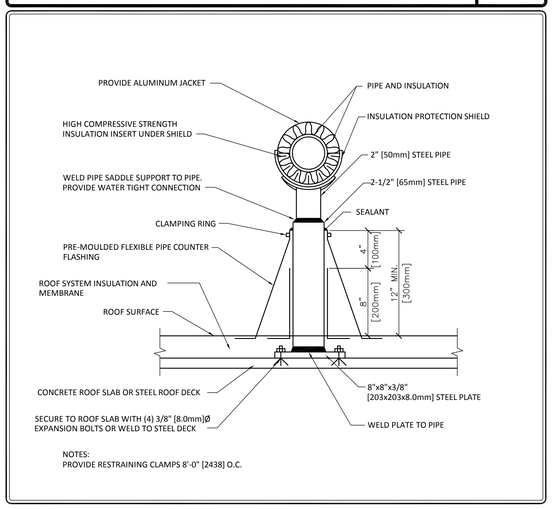

NOTES:
PROVIDE RESTRAINING CLAMPS 8'-0" [2438] O.C.

STEAM HUMIDIFIER — 2

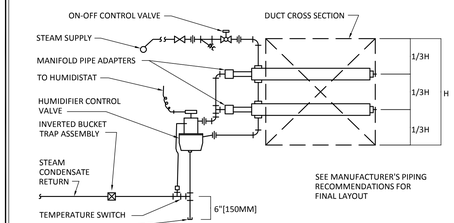

SAFETY VALVE DETAIL — 6

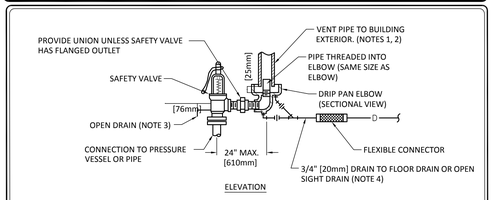

NOTES

1. UNLESS OTHERWISE SHOWN ON THE DRAWINGS, SIZE THE VENT PIPE SO THAT STEAM IS NOT BLOWN OUT AT THE VENT PIPE ENTRANCE. UTILIZE THE CALCULATION METHOD CONTAINED IN ANSI B31.1. POWER PIPING CODE, APPENDIX II.
2. VENT PIPE SHALL TERMINATE AT EXTERIOR OF BUILDING WITH 90° ELBOW DOWN.
3. DISCHARGE OF DRAIN MUST BE DIRECTED AWAY FROM PLATFORMS OR OTHER AREAS WHICH PERSONNEL MAY OCCUPY.
4. DO NOT CONNECT ANY OTHER DRAIN TO THE DRIP PAN ELBOW DRAIN PIPE.

CONDENSATE PUMP SCHEMATIC — 4

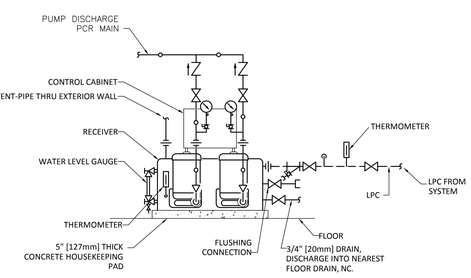

EXPANSION LOOP DETAIL — 5

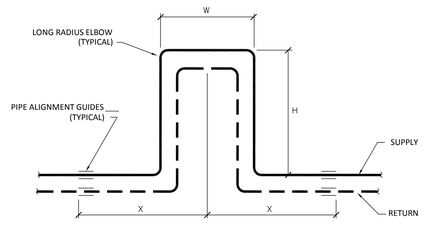

EXPANSION LOOP		
W	H	X
AS REQ.	2W	2H

STEAM PRESS. REDUCING STATION — 7

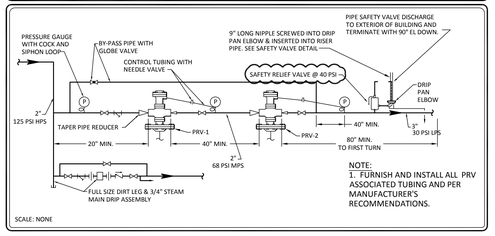

NOTE:
1. FURNISH AND INSTALL ALL PRV ASSOCIATED TUBING AND PER MANUFACTURER'S RECOMMENDATIONS.

SCALE: NONE

CORRIDOR DIFFUSER DETAIL — 8

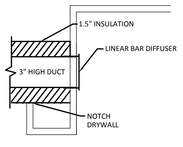

LOW PRESSURE STEAM DRIP — 9

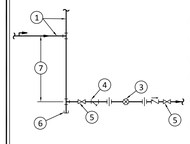

1. LOW PRESSURE STEAM MAIN (15-30 PSI)
2. "Y" STRAINER
3. F&T TRAP
4. STRAINER
5. SHUTOFF VALVE
6. COLLECTING POCKET AND DIRT LEG SAME SIZE AS MAIN
7. LENGTH FROM INVERT OF MAIN TO DRIP PIPE, 1 1/2 x MAIN PIPE DIA., 8" MINIMUM

SCALE: NONE

VRV FAN COIL BRANCH SELECTOR — 10

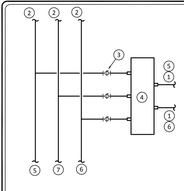

1. TO DX FAN COIL
2. TO OUTDOOR CONDENSOR
3. SHUT OFF BALL VALVE WITH INTEGRAL REFRIGERANT MAINTENANCE PORTS. TYP.
4. BRANCH SELECTOR
5. LIQUID LINE
6. SUCTION LINE
7. DISCHARGE LINE

SCALE: NONE

DUCTWORK RADIUS ELBOWS — 11

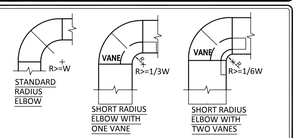

NOTE:
1. THE INTERIOR SURFACE OF ALL RADIUS ELBOWS SHALL BE MADE ROUND.
2. ALL STANDARD RADIUS ELBOWS SHOWN ON FLOOR PLANS MAY BE MADE SHORT RADIUS ELBOWS. ALL SHORT RADIUS ELBOWS SHALL HAVE VANES. VANES SHALL BE CONSTRUCTED, SUPPORTED AND FASTENED AS RECOMMENDED BY SMACNA.

SCALE: NONE

STEAM HEATING COIL — 12

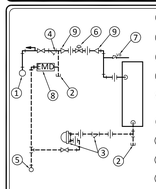

1. LOW PRESSURE STEAM SUPPLY
2. SEDIMENT POCKET
3. F&T TRAP AND STRAINER
4. STRAINER
5. LOW PRESSURE CONDENSATE RETURN.
6. AUTOMATIC CONTROL VALVE
7. VACUUM BREAKER
8. END OF MAIN DRIP
9. ECCENTRIC REDUCER

SCALE: NONE

CEILING DIFFUSER — 13

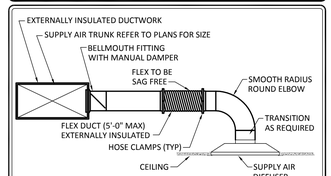

SCALE: NONE

RETURN/EXHAUST CONNECTION — 14

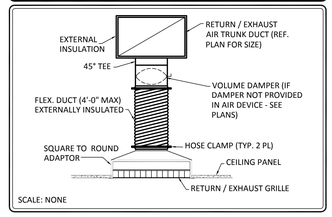

SCALE: NONE

DESIGNER/ENGINEER: SH
CAD-OPERATOR: SH
QAQC/CHECKER: BL

Revisions	Date
ISSUED FOR BID	02/28/2012
PRE-BID AMENDMENT, REV 1	04/26/2012
PRE-BID AMENDMENT	05/10/2012

Dynamix Engineering Ltd.
Facility Engineering Consultants
855 Grandview Avenue, Third Floor Columbus, Ohio 43215
Phone: (614)443-1178 · Fax: (614)443-1594 · Email: dynamix@dynamix-ltd.com
Comm. No.: 110028

STATE OF OHIO · MACE E-50556 · MONTGOMERY E-66852 · GRIFFIN E-57049 · REGISTERED PROFESSIONAL ENGINEER
Professional Seal

Revised By:

Drawing Title: MECHANICAL SCHEDULES AND DETAILS
SCALE: NONE

Project Title: OPEN MRI SITE PREP

Date: 02-28-2012
Project No.: 552-CSI-101

Approved: Project Manager: RANDI FIORINA
Approved: Service Chief: GARY ABREU

Building Number: 335
Checked: DYNAMIX
Drawn: SH
Location: 4100 WEST THIRD STREET DAYTON, OH 45428

Drawing No.: **M0-02**

VAMC, DAYTON
VA Department of Veterans Affairs

VA FORM 08-6231, OCT 1978

REFRIGERANT PIPING SCHEMATIC - CU-X (TYP)

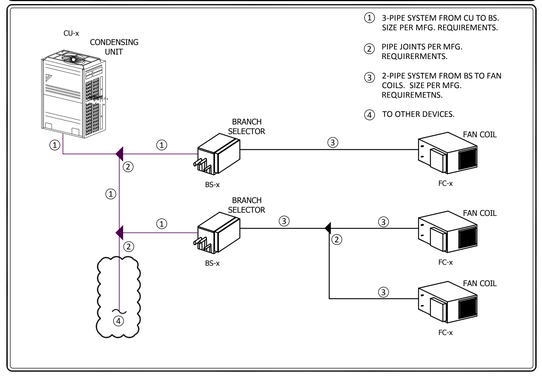

CENTRALIZED CONTROL WIRING SCHEMATIC

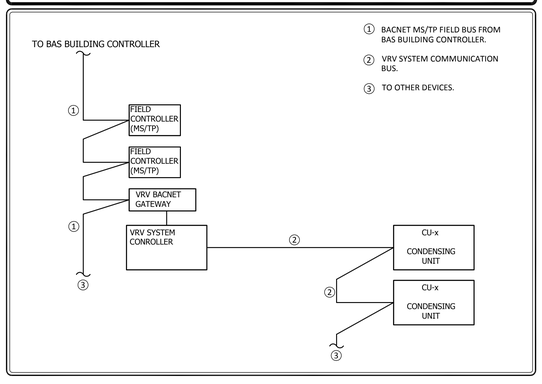

WIRING SCHEMATIC - CU-X (TYP)

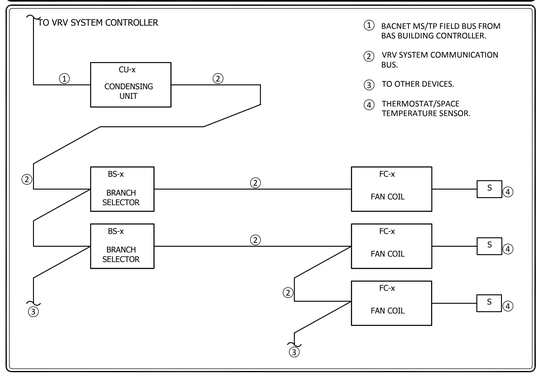

ENERGY RECOVERY VENTILATOR - SCHEMATIC DIAGRAM

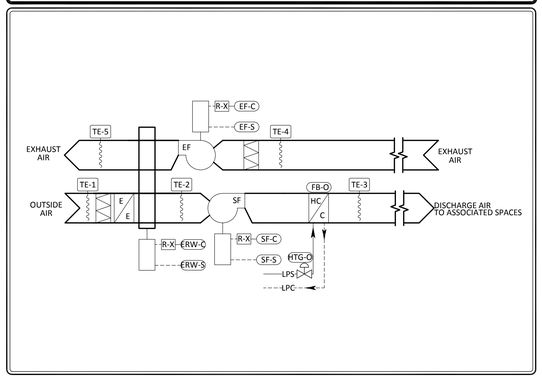

VARIABLE REFRIGERANT VOLUME (VRV) SYSTEM INSTALLATION NOTES

1. ENTIRE VRV SYSTEM INCLUDING FAN COIL UNITS, BRANCH SELECTOR BOXES, CONDENSING UNITS AND ALL CONTROLS SHALL BE MANUFACTURED BY ONE MANUFACTURER.
2. FOR CLARIFICATION PURPOSES ALL REFRIGERATION VALVES AND SPECIALTIES ARE NOT SHOWN ON THE SCHEMATICS. CONTRACTOR IS TO FURNISH AND INSTALL ALL VALVES, REFRIGERATION SPECIALTIES AND ACCESSORIES AS REQUIRED BY VRV SYSTEM MANUFACTURER AND PROJECT SPECIFICATIONS.
3. PIPING AND CONTROLS LAYOUT MAY VARY FROM MANUFACTURER TO MANUFACTURER. CONTRACTOR SHALL INSTALL PER MANUFACTURER RECOMMENDATIONS AND ALL REQUIREMENTS SHALL BE INCLUDED IN CONTRACTORS BID PRICE.

VARIABLE REFRIGERANT VOLUME -SYSTEM

SEQUENCE OF OPERATIONS

THE VARIABLE REFRIGERANT VOLUME (VRV) SYSTEM SHALL CONSIST OF AN OUTDOOR CONDENSING UNIT WITH VARIABLE SPEED COMPRESSOR(S) AND MULTIPLE INDOOR FAN COILS. VRV CONTROL SYSTEM SHALL BE BY THE SAME MANUFACTURER AS VRV SYSTEM. THE SYSTEM SHALL BE CONTROLLED ON AN OCCUPIED/UNOCCUPIED TIME SCHEDULE AS DEFINED AT THE OPERATOR WORKSTATION. THE VRV SYSTEM SHALL HAVE CENTRALIZED CONTROLLERS. THE BUILDING AUTOMATION SYSTEM SHALL INTERFACE TO THE VRV SYSTEM CONTROLLER TO ADJUST SETPOINTS, OCCUPY ZONES, AND MONITOR THE SYSTEM.

THE VRV CONDENSING UNIT SHALL MODULATE TO MATCH THE LOAD OF THE CONNECTED INDOOR UNITS.

OCCUPIED MODE:
THE INDIVIDUAL FAN COILS SHALL CYCLE THE FAN UPON A CALL FOR COOLING OR HEATING. THE FAN COIL SHALL OPERATE AT REDUCED LOAD AND VARY THE REFRIGERANT FLOW TO FULL COOLING OR HEATING UNTIL THE SPACE IS AT THE OCCUPIED COOLING OR HEATING SETPOINT. FAN COIL UNIT CONTROLLER SHALL COMMUNICATE WITH THE BRANCH SELECTOR BOX TO CONTROL THE MODE OF OPERATION (HEATING OR COOLING).

UNOCCUPIED MODE:
THE FAN AND DX COOLING COIL SHALL BE CYCLED TO MAINTAIN AN INCREASED UNOCCUPIED SPACE TEMPERATURE SETPOINT.

IN, HEATING MODE, THE FAN AND DX COIL SHALL BE CYCLED TO MAINTAIN DECREASED UNOCCUPIED SPACE TEMPERATURE SETPOINT.

THE UNIT SHALL BE CONTROLLED ON ITS OWN OCCUPIED/UNOCCUPIED TIME SCHEDULE AS DEFINED AT THE OPERATOR WORKSTATION.

ROOM HUMIDITY CONTROL (MRI ROOM ONLY):
AIR FLOW PROVING SWITCH SHALL PROVE AIR FLOW BEFORE STEAM CONTROL VALVE IS ALLOWED TO OPEN.

THE HUMIDIFIER STEAM CONTROL VALVE SHALL BE MODULATED TO MAINTAIN A SPACE HUMIDITY SETPOINT OF 50% R.H.

A DUCT HIGH LIMIT HUMIDISTAT SHALL PREVENT THE HUMIDIFIER DISCHARGE AIR FROM RISING ABOVE 80% RH. AS THE DISCHARGE AIR HUMIDITY APPROACHES THE HIGH LIMIT, THE HUMIDIFIER CONTROL VALVE SHALL BE MODULATED TOWARD THE FULLY CLOSED POSITION.

SYSTEM POINTS:

TYPE	DESCRIPTION	QUANTITY
AI	SPACE TEMPRATURE	1 (PER FAN COIL)
AO	SPACE OCCUPIED SETPOINT	1 (PER FAN COIL)
AO	SPACE UNOCCUPIED SETPOINT	1 (PER FAN COIL)
DO	OCCUPIED COMMAND	1 (PER FAN COIL)
AO	VRV CONDENSING UNIT COMMAND	1 (PER COND. UNIT)
AI	VRV SYSTEM LOAD %	1 (PER COND. UNIT)
DI	VRV CONDENSING UNIT STATUS	1 (PER COND. UNIT)
DI	FAN COIL FAULT	1 (PER FAN COIL)
DI	VRV CONDENSING UNIT FAULT	1 (PER COND. UNIT)
AI	SPACE HUMIDITY	1 (MRI UNIT ONLY)
AO	HUMIDIFIER VALVE COMMAND	1 (MRI UNIT ONLY)

ERV-1 OPERATION

SEQUENCE OF OPERATIONS: ENERGY RECOVERY VENTILATOR (ERV)

MODE CONTROL -
THE ERV SHALL OPERATE WHEN THE BUILDING IS OCCUPIED OR ANY OF THE FAN COILS ARE IN THE OCCUPIED MODE. THE SUPPLY FAN, EXHAUST FAN, AND ENERGY RECOVERY WHEEL SHALL OPERATE WHEN ERV IS IN OPERATION.

DEFROST CONTROL -
THE DEFROST HEATER SHALL OPERATE WHEN SENSOR DETERMINES THAT THE ENERGY RECOVERY WHEEL IS FROSTING.

DISCHARGE AIR CONTROL -
THE STEAM HEATING VALVE AND FACE & BYPASS DAMPER SHALL BE MODULATED IN SEQUENCE TO MAINTAIN THE DISCHARGE AIR TEMPERATURE AT A NEAUTRAL AIR TEMPERATURE. THE STEAM VALVE SHALL BE FULLY OPEN BEFORE THE FACE AND BYPASS DAMPER BEGINS TO OPEN TO THE COIL.

SYSTEM POINTS:

TYPE	DESCRIPTION	QUANTITY
AI	OUTSIDE/ERV ENTERING AIR TEMPERATURE	1
AI	ERV DISCHARGE AIR TEMPRATURE	1
AI	ERV EXHAUST AIR ENTERING TEMPERATURE	1
AI	ERV EXHAUST AIR LEAVING TEMPERATURE	1
AI	DISCHARGE AIR TEMPERATURE	1
AO	DISCHARGE AIR SETPOINT	1
AO	STEAM HEATING VALVE COMMAND	1
AO	FACE & BYPASS DAMPER COMMAND	1
DO	OCCUPIED COMMAND	1
DO	SUPPLY FAN COMMAND	1
DO	EXHAUST FAN COMMAND	1
DO	ENERGY RECOVERY WHEEL COMMAND	1
DI	SUPPLY FAN STATUS	1
DI	EXHAUST FAN STATUS	1
DI	ENERGY RECOVERY WHEEL STATUS	1
DO	MOTOR-OPERATED DAMPER	2

DESIGNER/ENGINEER SH
CAD OPERATOR SH
QAQC/CHECKER BL

Revisions	Date
ISSUED FOR BID	02/28/2012
PRE-BID AMENDMENT, REV 1	04/26/2012
PRE-BID AMENDMENT	05/10/2012

Dynamix Engineering Ltd.
Facility Engineering Consultants
855 Grandview Avenue, Third Floor Columbus, Ohio 43215
Phone: (614)443-1178 · Fax: (614)443-1594 · Email: dynamix@dynamix-ltd.com
Comm. No.: 110028

STATE OF OHIO · MACE E-50556 · MONTGOMERY E-66852 · GRIFFIN E-57049 · REGISTERED PROFESSIONAL ENGINEERS
Professional Seal

Revised By:

Drawing Title: MECHANICAL SCHEDULES AND DETAILS
SCALE: NONE

Project Title: OPEN MRI SITE PREP

Date: 02-28-2012
Project No. 552-CSI-101

Approved: Project Manager: RANDI FIORINA
Approved: Service Chief: GARY ABREU

Building Number: 335
Checked: DYNAMIX
Drawn: SH

Location: 4100 WEST THIRD STREET DAYTON, OH 45428

Drawing No. M0-03

VAMC, DAYTON
VA Department of Veterans Affairs

VA FORM 08-6231, OCT 1978

PLAN NOTES

1.-RELIEF AIR OPENING PROVIDED PER VA MRI STANDARDS.

2.-RUN 16"x16" DUCT UP TO EF-1 ON ROOF.

3.-O.A. DAMPER. BALANCE TO CFM SHOWN.

4.-ALL PENETRATIONS OF MRI ROOM MUST BE INSTALLED PER DETAIL 1 ON SHEET M0-00.

5.-MOUNT FAN COIL UNIT ON WALL WITH BOTTOM AT 7'-0" A.F.F. COORDINATE LOCATION WITH EQUIPMENT.

6.-ROUTE 14"x12" O.A. INTAKE DUCT UP TO INTAKE HOOD IH-1 ON ROOF.

7.- SENSOR FOR SETPOINT ADJUSTMENT FOR MRI. REMOTE TEMPERATURE AND HUMIDITY SENSOR IN RETURN AIR DUCTWORK OUTSIDE OF MRI ROOM.

8.-MOUNT AIR DEVICE IN SIDEWALL. CENTER IN SOFFIT WALL VERTICALLY.

9-RUN DUCT INSIDE SOFFIT AT THIS LOCATION.

10.-SEE ARCHITECTURAL DRAWINGS FOR EXACT LOCATION.

11.-CEILING MOUNTED LINEAR RETURN DIFFUSER - MOUNT IN SPACE BETWEEN BEAM AND WALL.

12.-VANDAL-PROOF COVER.

13.-FAN COIL SERVICE CLEARANCE.

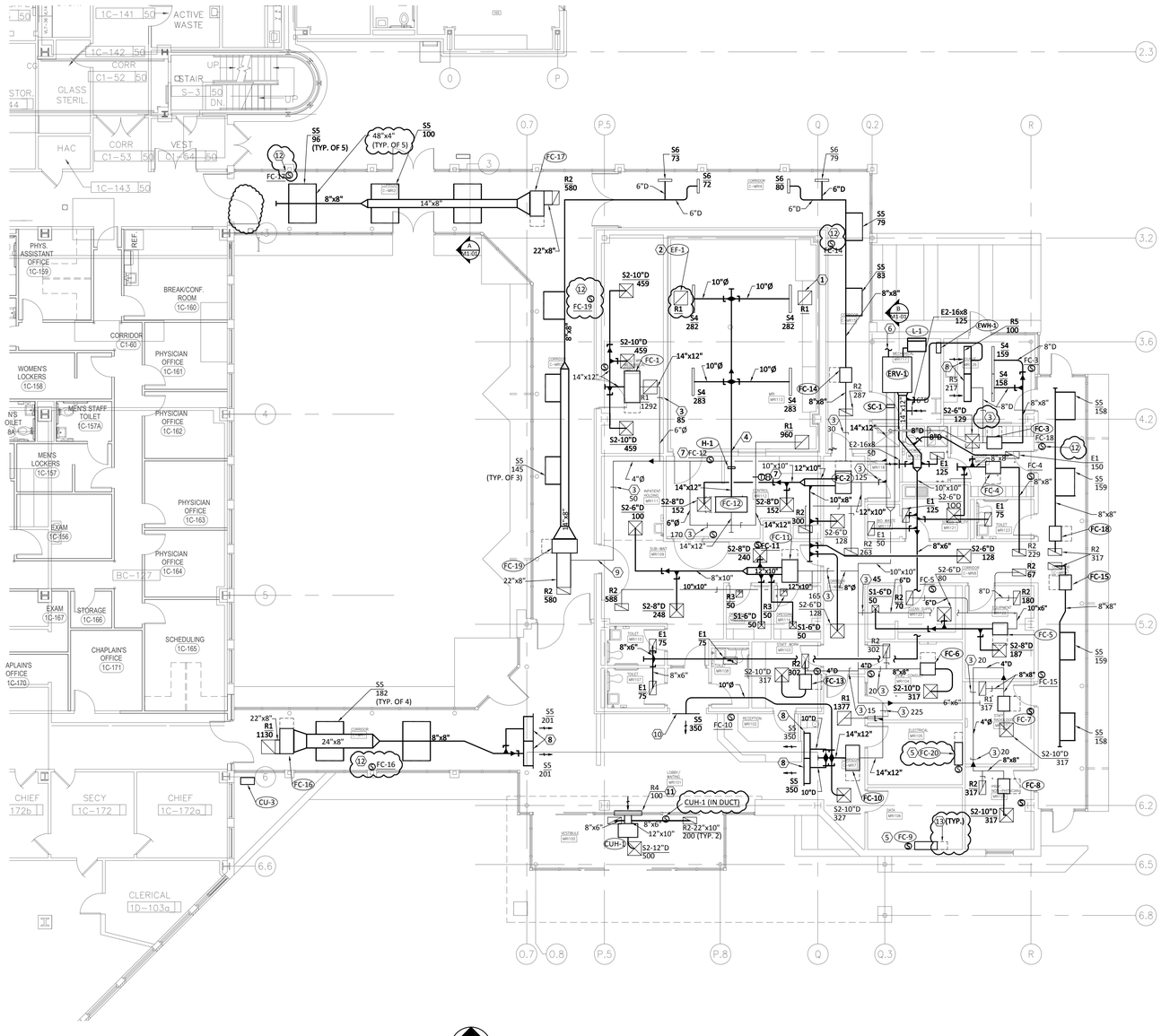

NORTH

FIRST FLOOR HVAC PLAN

SCALE: 1/8"=1'-0"

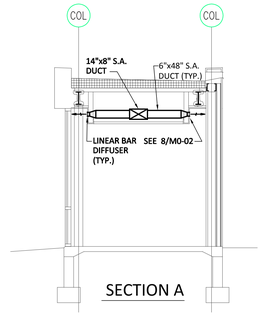

SECTION A

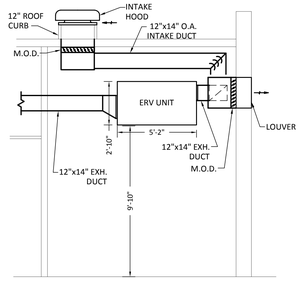

SECTION B

DESIGNER/ENGINEER SH
CAD OPERATOR SH
QAQC/CHECKER BL

Revisions	Date
ISSUED FOR BID	02/28/2012
PRE-BID AMENDMENT, REV 1	04/26/2012
PRE-BID AMENDMENT	05/10/2012

Dynamix Engineering Ltd.
Facility Engineering Consultants
855 Grandview Avenue, Third Floor Columbus, Ohio 43215
Phone: (614)443-1178 · Fax: (614)443-1594 · Email: dynamix@dynamix-ltd.com
Comm. No.: 110028

STATE OF OHIO · MACE E-50556 · MONTGOMERY E-66852 · GRIFFIN E-57049 · REGISTERED PROFESSIONAL ENGINEER

Professional Seal

Revised By:

Drawing Title	FIRST FLOOR HVAC PLAN SCALE: 1/8"=1'-0"
Project Title	OPEN MRI SITE PREP
Date	02-28-2012
Project No.	552-CSI-101
Approved: Project Manager	RANDI FIORINA
Building Number	335
Checked	DYNAMIX
Drawn	SH
Drawing No.	M1-01
Approved: Service Chief	GARY ABREU
Location	4100 WEST THIRD STREET DAYTON, OH 45428

VAMC, DAYTON

VA Department of Veterans Affairs

VA FORM 08-6231, OCT 1978

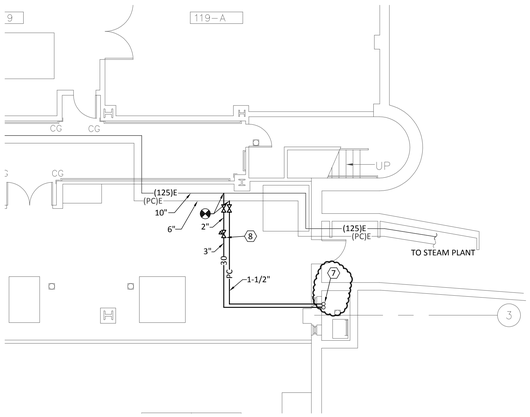

NORTH

BASEMENT HVAC PLAN

SCALE: 1/8"=1'-0"

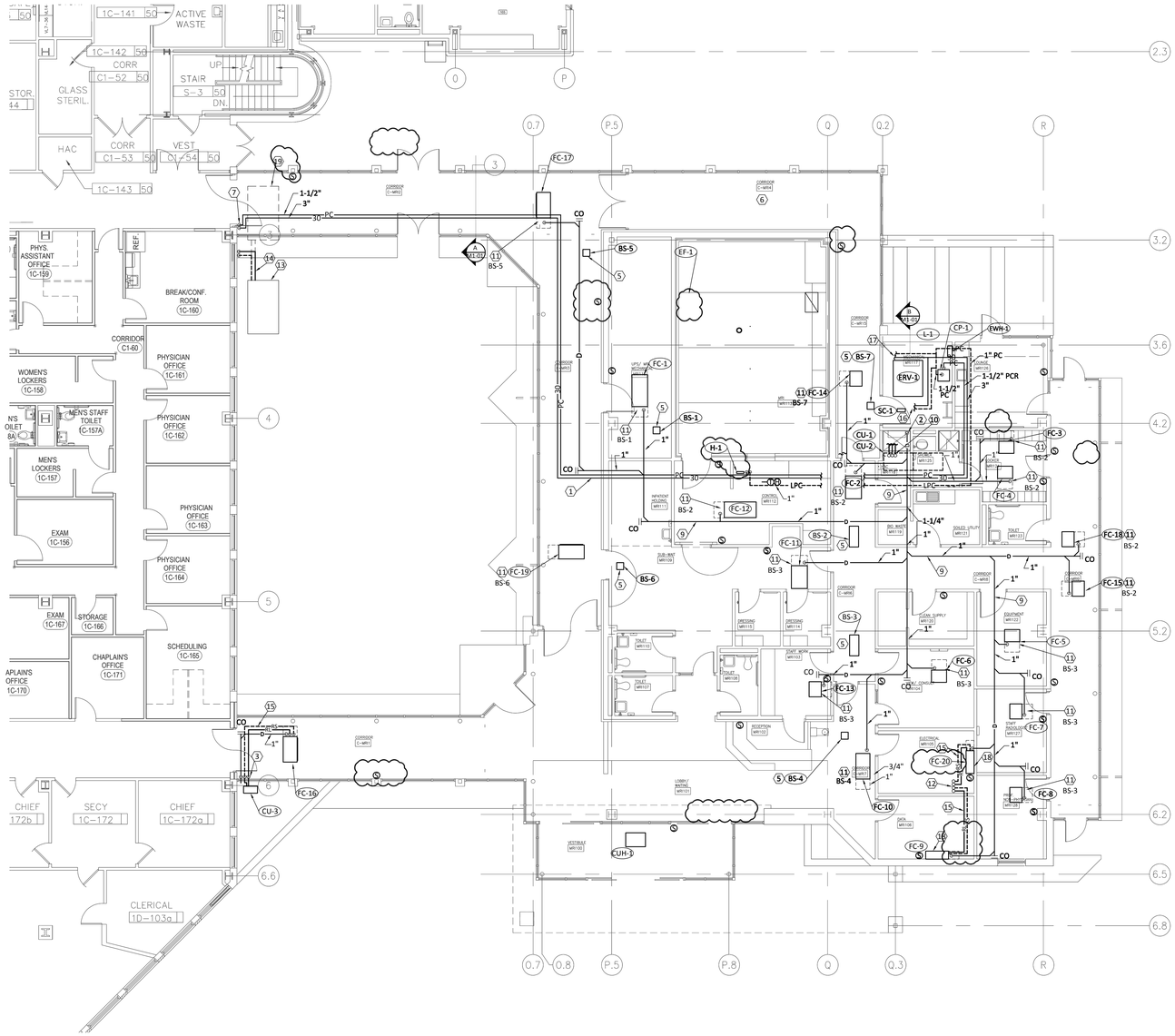

NORTH

FIRST FLOOR HVAC PIPING PLAN

SCALE: 1/8"=1'-0"

PLAN NOTES

1.-COORDINATE LOCATION OF PIPING WITH SOFFIT - SEE ARCHITECTURAL DRAWINGS.

2.-RUN AC CONDENSATE DRAIN PIPE DOWN WALL AND TERMINATE ABOVE MOP SINK.

3.-REFRIGERANT PIPING DOWN INSIDE CHASE COORDINATE WITH ARCHITECTURAL. RUN PIPING TO OUTDOORS AT BOTTOM OF CHASE.

4.-VRV SYSTEM MANUFACTURER SHALL PROVIDE REFRIGERANT PIPING LAYOUT AND PIPE SIZING BASED ON CONTRACTORS COORDINATION DRAWINGS AND REQUIRED CAPACITIES.

5.-PROVIDE 3 PIPE - LIQUID, HOT GAS, AND SUCTION REFRIGERANT PIPING FROM BRANCH SELECTOR BOXES TO CONDENSING UNIT PER MFR'S ROUTING AND SIZING. PROVIDE 2 PIPE REFRIGERANT PIPING FROM BRANCH SELECTOR BOX TO (EVAPORATOR) FAN COIL UNIT PER MFR'S ROUTING AND SIZING.

6.-ABOVE CEILING IN THIS AREA IS TO REMAIN CLEAR - DUCTWORK, PIPING, OR MECHANICAL EQUIPMENT CANNOT BE INSTALLED OR PASS THRU THIS AREA .

7.-STEAM AND CONDENSATE PIPING DOWN INSIDE CHASE TO BASEMENT BELOW.

8.-NEW STEAM AND CONDENSATE TAP . SEE PRV STATION DETAIL 7 ON SHEET M0-02.

9.-SLOPE ALL AC CONDENSATE DRAIN PIPING DOWN TOWARDS DRAIN AT 1/8" PER FT.

10.-3 PIPE (LIQUID, SUCTION, AND HOT GAS) REFRIGERANT PIPNG FROM BRANCH SELECTORS UP TO CONDENSING UNIT ON ROOF.

11.- ROUTE 2 PIPE REFRIGERANT (LQUID/HOT GAS AND SUCTION) PIPING FROM FAN COIL UNIT TO BRANCH SELECTOR BOX INDICATED. VRV MFR SHALL LAYOUT AND SIZE PIPING.

12.-REFRIGERANT PIPING UP TO CONDENSING UNIT ON ROOF.

13.-RELOCATE EXISTING CONDENSING UNIT TO THIS LOCATION. PROVIDE NEW CONCRETE PAD. PAD TO EXTEND 4" BEYOND EDGE OF UNIT ON ALL SIDES. CONTRACTOR TO FIELD VERIFY EXISTING UNIT SIZE.

14.-EXTEND EXISTING CONDENSING UNIT PIPING TO NEW LOCATION. PROVIDE NEW PIPING AS REQUIRED. INSULATE AND COVER PIPING WITH ALUMINUM JACKETING. PROVIDE CONCRETE PAD FOR ENTIRE LENGTH OF PIPING. SUPPORT PIPING FROM CONCRETE PAD.

15.-ROUTE REFRIGERANT PIPING FROM FC UNIT TO INDIVIDUAL CONDENSING UNIT. FC UNIT/CONDENSING UNIT MFR SHALL PROVIDE PIPE SIZING.

16.-RUN 3/4" STEAM AND 3/4" LPC TO DUCT MOUNTED STEAM COIL SC-1.

17.-RUN 3" STEAM AND 1-1/2" CONDENSATE TO DOMESTIC SEMI-INSTANTANEOUS WATER HEATER. 1053.6 LBS/HR.

18.-MOUNT FAN COIL UNIT ON WALL AT 7'-0" A.F.F.

19.-CURRENT LOCATION OF EXISTING CONDENSING UNIT TO BE RELOCATED.

GENERAL NOTES

A.-VRV SYSTEM MANUFACTURER SHALL PROVIDE REFRIGERANT PIPING LAYOUT AND PIPE SIZING BASED ON CONTRACTORS COORDINATION DRAWINGS AND REQUIRED CAPACITIES.

DESIGNER/ENGINEER SH
CAD OPERATOR SH
QAQC/CHECKER BL

Revisions	Date
ISSUED FOR BID	02/28/2012
PRE-BID AMENDMENT, REV 1	04/26/2012
PRE-BID AMENDMENT	05/10/2012

Dynamix Engineering Ltd.
Facility Engineering Consultants
855 Grandview Avenue, Third Floor Columbus, Ohio 43215
Phone: (614)443-1178 · Fax: (614)443-1594 · Email: dynamix@dynamix-ltd.com
Comm. No.: 110028

STATE OF OHIO · MACE E-50556 · MONTGOMERY E-66852 · GRIFFIN E-57049 · REGISTERED PROFESSIONAL ENGINEERS

Professional Seal

Revised By:

Drawing Title: FIRST FLOOR HVAC PIPING PLAN
SCALE: 1/8"=1'-0"

Project Title: OPEN MRI SITE PREP

Date: 02-28-2012

Project No. 552-CSI-101

Approved: Project Manager: RANDI FIORINA

Building Number: 335

Checked: DYNAMIX

Drawn: SH

Drawing No. M1-02

Approved: Service Chief: GARY ABREU

Location: 4100 WEST THIRD STREET DAYTON, OH 45428

VAMC, DAYTON

VA Department of Veterans Affairs

VA FORM 08-6231, OCT 1978

ROOF PLAN NOTES

1.-VRF REFRIGERANT PIPING DOWN THRU ROOF. FURNISH AND INSTALL PIPE CURB AND FLASH AND SEAL PER SPECIFICATIONS.

2.-WEATHER-EXPOSED PIPING SHALL BE COVERED INSULATED PER SPECIFICATIONS AND COVERED WITH ALUMINUM JACKETING. SUPPORT PER DETAIL 1/M0-02.

3.-MOUNT CONDENSING UNIT ON ROOF CURB RAILS. FLASH AND SEAL PER SPECIFICATIONS.

4.- MOUNT UNIT ON ROOF CURB. FLASH AND SEAL PER SPECIFICATIONS.

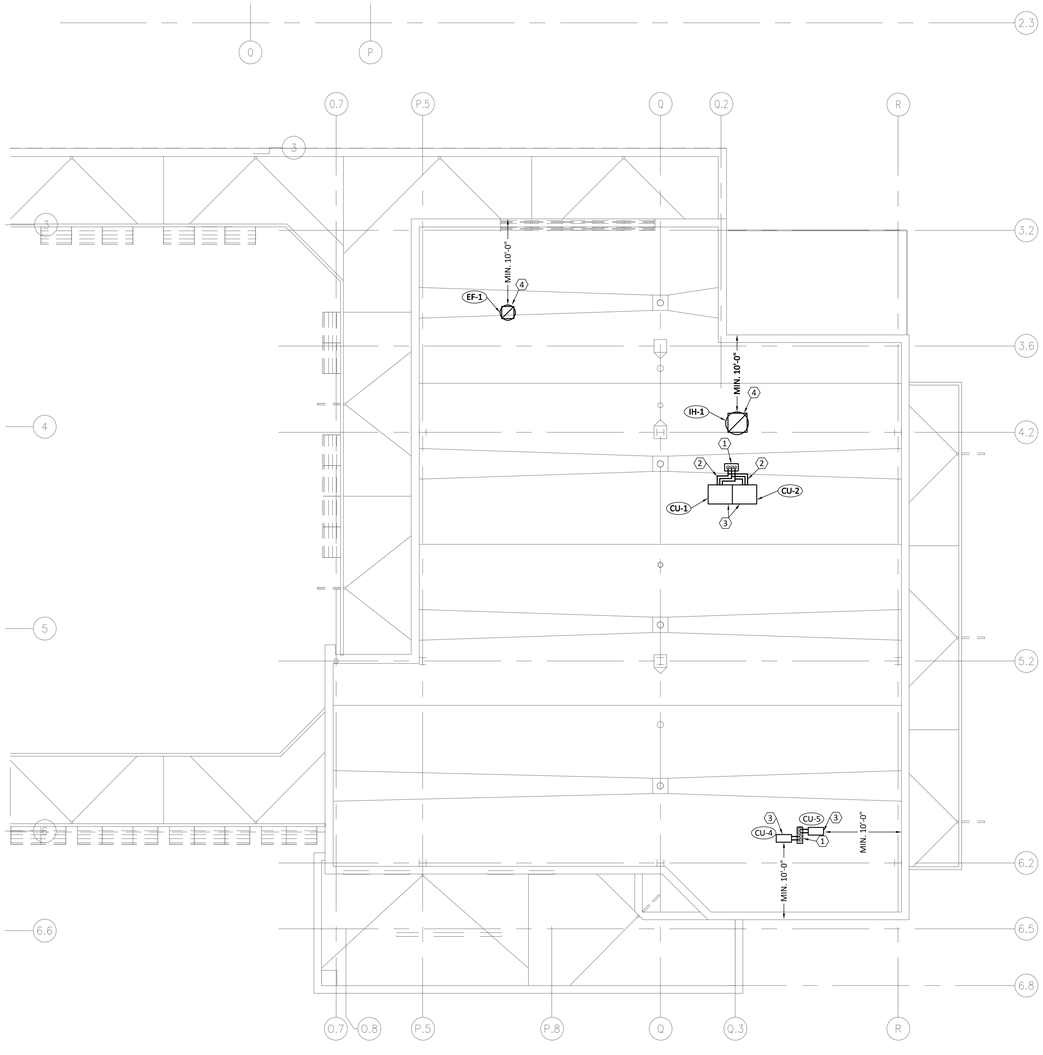

NORTH

ROOF HVAC PLAN

SCALE: 1/8"=1'-0"

DESIGNER/ENGINEER SH
CAD OPERATOR SH
QAQC/CHECKER BL

Revisions	Date
ISSUED FOR BID	02/28/2012
PRE-BID AMENDMENT, REV 1	04/26/2012
PRE-BID AMENDMENT	05/10/2012

Dynamix Engineering Ltd.
Facility Engineering Consultants
855 Grandview Avenue, Third Floor Columbus, Ohio 43215
Phone: (614)443-1178 · Fax: (614)443-1594 · Email: dynamix@dynamix-ltd.com
Comm. No.: 110028

STATE OF OHIO
MACE E-50556
MONTGOMERY E-66852
GRIFFIN E-57049
REGISTERED PROFESSIONAL ENGINEERS

Professional Seal

Revised By:

Drawing Title	ROOF HVAC PLAN SCALE: 1/8"=1'-0"
Project Title	OPEN MRI SITE PREP
Date	02-28-2012
Project No.	552-CSI-101
Approved: Project Manager	RANDI FIORINA
Building Number	335
Checked	DYNAMIX
Drawn	SH
Approved: Service Chief	GARY ABREU
Location	4100 WEST THIRD STREET DAYTON, OH 45428
Drawing No.	M1-03

VAMC, DAYTON

VA Department of Veterans Affairs

VA FORM 08-6231, OCT 1978

DISTRIBUTION PANEL NDB ELEVATION

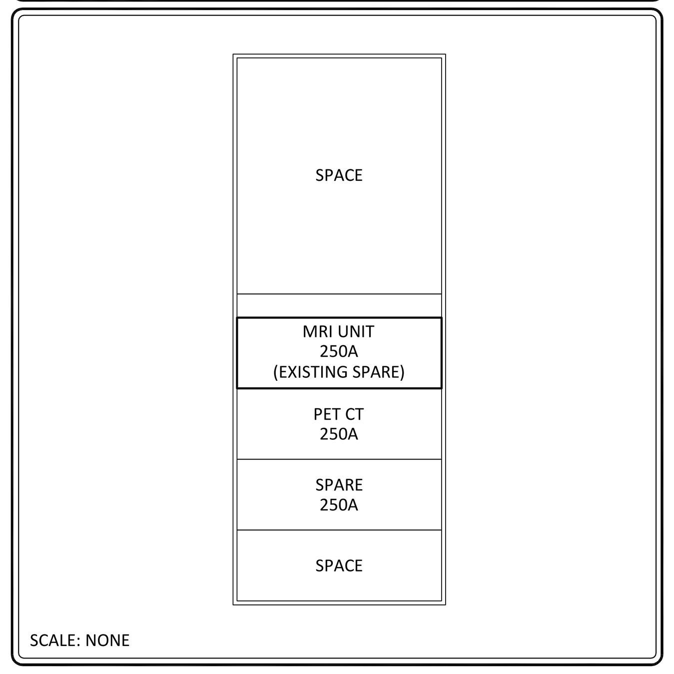

DISTRIBUTION PANEL EDP2 ELEVATION

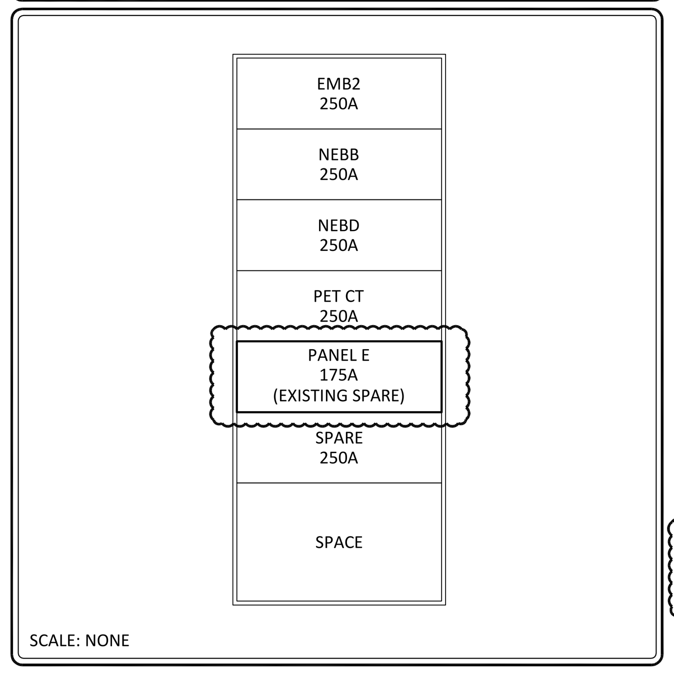

DISTRIBUTION PANEL CDB ELEVATION

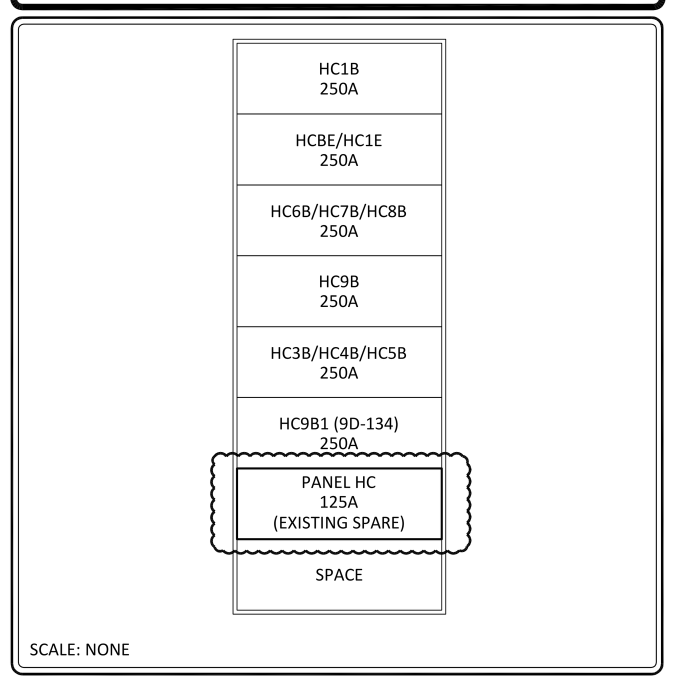

DISTRIBUTION PANEL LSD ELEVATION

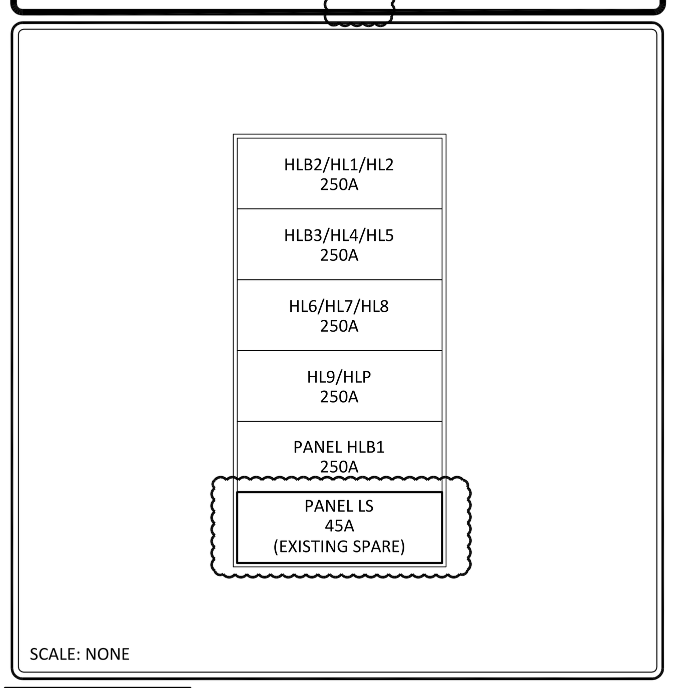

LIGHTING FIXTURES

FIXTURE DESIGNATION	VOLTAGE	FIXTURE DESCRIPTION	LAMPS QUANTITY: FLUORESCENT	INCANDESCENT	HID	WATTS / LAMP	CATALOG NUMBER	MOUNTING OPTIONS	REFER TO NOTE(S)
B1	208	CONCRETE LED DECORATIVE BOLLARD FIXTURE, 4' TALL, SMOOTH FINISH.	-	-	-	6	LED	GROUND	
P1	208	DECORATIVE POLE MOUNTED LED AREA LIGHT, SINGLE HEAD, 25' POLE	-	-	-	255	LED	POLE	
P2	208	DECORATIVE POLE MOUNTED LED AREA LIGHT, DUAL HEAD, 25' POLE	-	-	-	510	LED	POLE	
CV1	120	LINEAR ROUND ASYMMETRIC WALL WASH FIXTURE, MOUNTED IN COVE	2	-	-	32		COVE	
							T8/841		
R1	120	6" COMPACT FLUORESCENT DOWNLIGHT WITH LENS	2	-	-	13	13W QPL/841	R	
R2	120	6" INCANDESCENT CAN FOR USE IN MRI, MUST BE NON-FEROUS	-	1	-	75	A19	R	2
R3	120	2' X 4' 2 LAMP HIGH EFFICIENCY RECESSED VOLUMETRIC TROFFER	2	-	-	32	T8/841	R	1,3
R4	120	6" 2 LAMP RECESSED OPEN CAN	2	-	-	13	13W QPL/841	R	1
R5	120	1' X 4' 1 LAMP HIGH EFFICIENCY RECESSED VOLUMETRIC TROFFER	1	-	-	32	T8/841	R	
R6	120	1' X 2' 1 LAMP ASYMMETRIC THROW FIXTURE	1	-	-	36	36W BIAX	R	
S1	120	TWO TONED DECORATIVE FRIT PENDANT FIXTURE	-	1	-	50	50W MR16	P	
UC1	120	UNDERCABINET LIGHT, ROCKER SWITCH. PROVIDE IN LENGTHS AS SHOWN	1	-	-	17	T8/841	UC	
W1	120	14" DECORATIVE BUILDING MOUNTED WALL FIXTURE, TYPE IV DOWN DIST	1	-	-	42	42W QPL/841	W	
W2	120	RECTANGULAR WET LOCATION STEP LIGHT WITH LOUVERS	1	-	-	26	26W QPL/841	W	
X1	120	DIE CAST ALUMINUM EXIT SIGN NO BATTERY, 1 FACE, RED LETTERS	-	-	-	-	LED SUPPLIED WITH UNIT	UV	
X2	120	DIE CAST ALUMINUM EXIT SIGN NO BATTERY, 2 FACE, RED LETTERS	-	-	-	-	LED SUPPLIED WITH UNIT	UV	
X3	120	WET LOCATION EXIT SIGN NO BATTERY, 1 FACE, RED LETTERS	-	-	-	-	LED SUPPLIED WITH UNIT	UV	

MOUNTING OPTIONS:
AC - AIRCRAFT CABLE
C - CHAIN
CM - CEILING MOUNT
CV - COVE
P - STEM
R - RECESSED
S - SURFACE
UC - UNDER CABINET
W - WALL
UV - UNIVERSAL

NOTES:
1.- FIXTURES WITH AN "A" FOLLOWING THE FIXTURE DESIGNATION INDICATES 10% DIMMABLE FLUORESCENT BALLASTS.
2.- FIXTURES TO BE PROVIDED WITH SLOPED CEILING ADAPTER. VERIFY ANGLE IN FIELD.
3.- FIXTURES WITH A "B" FOLLOWING THE FIXTURE DESIGNATION SHALL BE PROVIDED WITH STEP DIMMING BALLAST.

PANEL: N

CONN. LOAD: 47.40 KVA DEMAND LOAD: 45.80 KVA (127.13 A)
MAINS: 225 A MB VOLTAGE: 208Y/120 V, 3 Ø, 4 W
LOCATION: ELECTRICAL RM MOUNTING: SURFACE

REMARKS	KVA	BKR.	CKT. NO.	AND PH.	CKT. NO.	BKR.	KVA	REMARKS
EXTERIOR LTG	0.20-L	20/1	1	A	2	20/1	1.26-R	CORRIDOR REC
CORRIDORS LTG	0.98-L	20/1	3	B	4	20/1	0.90-R	LOBBY/RR REC
LOBBY LTG	0.44-L	20/1	5	C	6	20/1	1.04-R	LOBBY/COR REC
GENERAL LTG	0.75-L	20/1	7	A	8	20/1	0.72-R	STF/RCPTN REC
GENERAL LTG	1.19-L	20/1	9	B	10	20/1	0.72-R	RR/DRSSNG REC
VRV FAN COILS	0.62-M	20/2	11	C	12	20/1	1.20-R	METAL DETCTR
-	0.62-M		13	A	14	20/1	0.54-R	CORRIDOR REC
VRV FAN COILS	0.35-M	20/2	15	B	16	20/1	1.00-R	LOUNGE REC
-	0.35-M		17	C	18	20/1	1.00-R	LOUNGE REC
VRV FAN COILS	0.92-M	20/2	19	A	20	20/1	1.00-R	LOUNGE REC
-	0.92-M		21	B	22	20/1	1.30-R	LOUNGE REC
CU-3	1.72-M	20/2	23	C	24	20/1	1.26-R	LCKR/RR REC
-	1.72-M		25	A	26	20/1	0.72-R	CORRIOR REC
CU-3	1.72-M	20/2	27	B	28	20/1	1.66-R	EQP/CONS REC
-	1.72-M		29	C	30	20/1	0.90-R	OFFICE REC
ROOF REC/LTG	1.10-R	20/1	31	A	32	20/1	0.50-R	RELAY PNL LVRP
SPARE		20/1	33	B	34	20/1	1.02-L	SITE LTG
CUH-1	1.67-M	35/3	35	C	36	20/1	1.02-L	SITE LTG
-	1.67-M		37	A	38	20/1	1.28-L	SITE LTG
-	1.67-M		39	B	40	20/1	0.20-L	SITE LTG
CORRIDORS LTG	0.83-L	20/1	41	C	42	20/1	1.00-M	PATIENT LIFT
WTR HTR	1.00-M	20/1	43	A	44	20/1	1.50-M	EWH-1
CP AND MV1	1.00-M	20/1	45	B	46	20/1	0.50-R	AUTO DOOR
TELEVISIONS	1.00-R	20/1	47	C	48	20/1	0.50-R	AUTO DOOR
SPACE			49	A	50	20/1	0.50-R	AUTO DOOR
SPACE			51	B	52			SPACE
SPACE			53	C	54			SPACE

LEGEND: L-LIGHTING, R-RECEPTACLES, M-MOTORS, H-RESISTANCE HEAT, C-CONTROL, MLO- MAIN LUGS ONLY, DSL- DOUBLE SET OF LUGS, MB-MAIN BREAKER, LC-LOCKING CLIP, SFL-SUB FEED LUGS

PANEL: HC

CONN. LOAD: 14.29 KVA DEMAND LOAD: 13.25 KVA (36.78 A)
MAINS: 225 A MB VOLTAGE: 208Y/120 V, 3 Ø, 4 W
LOCATION: ELECTRICAL RM MOUNTING: SURFACE

REMARKS	KVA	BKR.	CKT. NO.	AND PH.	CKT. NO.	BKR.	KVA	REMARKS
MRI SUITE REC	0.72-R	20/1	1	A	2	20/1	1.50-R	RCPTN DESK REC
MRI SUITE REC	0.36-R	20/1	3	B	4	20/1	1.00-R	STAFF WRK REC
MRI SUITE REC	0.36-R	20/1	5	C	6	20/1	0.54-R	MECH RM REC
MRI SUITE REC	1.00-R	20/1	7	A	8	20/1	0.36-R	ELEC RM REC
MRI SUITE REC	0.36-R	20/1	9	B	10	20/1	0.18-R	TECH RM REC
MRI SUITE REC	0.90-R	20/1	11	C	12	20/1	0.50-R	TECH RM REC
MRI SUITE REC	0.54-R	20/1	13	A	14	20/1	0.18-R	TECH RM REC
MRI AREA LTG	0.68-L	20/1	15	B	16	20/1	1.00-R	OFFICE REC
MRI AREA LTG	0.44-L	20/1	17	C	18	20/1	0.50-R	VIEW/CNSLT REC
UTILITY RMS LTG	0.37-L	20/1	19	A	20	20/1	1.00-R	OMNI CLN SPLY
SPARE		20/1	21	B	22	20/1	0.72-R	WIREMOLD 122
SPARE		20/1	23	C	24	20/1	1.08-R	WIREMOLD 122
SPARE		20/1	25	A	26	20/1		SPARE
SPARE		20/1	27	B	28	20/1		SPARE
SPARE		20/1	29	C	30	20/1		SPARE
SPARE		20/1	31	A	32	20/1		SPARE
SPACE			33	B	34			SPACE
SPACE			35	C	36			SPACE
SPACE			37	A	38			SPACE
SPACE			39	B	40			SPACE
SPACE			41	C	42			SPACE

PANEL: LS

CONN. LOAD: 1.10 KVA DEMAND LOAD: 1.10 KVA (3.05 A)
MAINS: 100 A MB VOLTAGE: 208Y/120 V, 3 Ø, 4 W
LOCATION: ELECTRICAL RM MOUNTING: SURFACE

REMARKS	KVA	BKR.	CKT. NO.	AND PH.	CKT. NO.	BKR.	KVA	REMARKS
EM & EXIT LTG	0.90-L	20/1	1	A	2	20/1	1.00-R	DOOR ACCESS
EXT EMERG LTG	0.20-L	20/1	3	B	4	20/1	0.80-R	DOOR ACCESS
SPARE		20/1	5	C	6	20/1	0.40-R	INTERCOM
SPARE		20/1	7	A	8	20/1		SPARE
SPARE		20/1	9	B	10	20/1		SPARE
SPARE		20/1	11	C	12	20/1		SPARE
SPARE		20/1	13	A	14	20/1		SPARE
SPARE		20/1	15	B	16	20/1		SPARE
SPARE		20/1	17	C	18	20/1		SPARE
SPARE		20/1	19	A	20	20/1		SPARE
SPARE		20/1	21	B	22	20/1		SPARE
SPARE		20/1	23	C	24	20/1		SPARE
SPARE		20/1	25	A	26	20/1		SPARE
SPARE		20/1	27	B	28	20/1		SPARE
SPARE		20/1	29	C	30	20/1		SPARE
SPARE		20/1	31	A	32	20/1		SPARE
SPACE			33	B	34			SPACE
SPACE			35	C	36			SPACE
SPACE			37	A	38			SPACE
SPACE			39	B	40			SPACE
SPACE			41	C	42			SPACE

WIRE SIZING SCHEDULE FOR 30AMP OR LESS

WIRE SIZES ARE FOR ITEMS NOT SHOW OR U.N.O.:

15A-2P (2) #12 & (1) #12 GND IN 3/4" CONDUIT.
15A-3P (3) #12 & (1) #12 GND IN 3/4" CONDUIT.
20A-1P (2) #12 & (1) #12 GND IN 3/4" CONDUIT.
20A-2P (2) #12 & (1) #12 GND IN 3/4" CONDUIT.
20A-3P (3) #12 & (1) #12 GND IN 3/4" CONDUIT.
25A-1P (2) #10 & (1) #10 GND IN 3/4" CONDUIT.
25A-2P (2) #10 & (1) #10 GND IN 3/4" CONDUIT.
25A-3P (3) #10 & (1) #10 GND IN 3/4" CONDUIT.
30A-1P (2) #10 & (1) #10 GND IN 3/4" CONDUIT.
30A-2P (2) #10 & (1) #10 GND IN 3/4" CONDUIT.
30A-3P (3) #10 & (1) #10 GND IN 3/4" CONDUIT.

UPSIZE WIRE PER SPECIFICATIONS FOR VOLTAGE DROP.

GENERAL NOTES

A.- GENERAL NOTES APPLY TO ALL SHEETS.

B.- ALL EQUIPMENT LOCATIONS ARE APPROXIMATE CONTRACTOR SHALL FIELD VERIFY ALL REMOVALS AND COORDINATE ALL WORK WITH OWNER PRIOR TO WORK.

C.- ALL FIRE ALARM STROBES SHALL BE SYNCHRONIZED.

D.- IN ALL CASES, REFER TO ARCHITECTURAL ELEVATIONS FOR EXACT DEVICE LOCATIONS AND MOUNTING HEIGHTS. COORDINATE MOUNTING HEIGHTS WITH DEVICES OF OTHER TRADES. COORDINATE PANEL LOCATION WITH PLUMBING CONTRACTOR TO ENSURE NO OVERHEAD WATER PIPING.

E.- PROVIDE DYMO LABELS FOR ALL OUTLET COVERS LISTED WITH PANEL AND CIRCUIT NUMBERS. ALL EMERGENCY OUTLETS SHALL BE SUPPLIED WITH RED COVER PLATE. ALL NORMAL RECEPTACLES SHALL BE SUPPLIED WITH IVORY COVER PLATE. REFER TO SPECIFICATIONS FOR ADDITIONAL REQUIREMENTS.

F.- PROVIDE 1/4" THICK STEEL PLATE TO BACK OF ELECTRICAL PANELS IN CORRIDORS. THE OVERALL DIMENSION OF THE PLATE IS TO BE THE SIZE OF THE ELECTRICAL PANEL. COORDINATE WALL THICKNESS FOR PANELBOARDS WITH ARCHITECT AND GC.

G.- EC TO HARD PIPE ALL EMERGENCY CIRCUITS. NO FLEXIBLE RACEWAY TO BE USED.

H.- EC TO COORDINATE ALL OUTLETS LOCATED ABOVE SINKS WITH ARCHITECTURAL ELEVATIONS OF THE RESPECTIVE AREA AND ALL OTHER TRADES. IF NO ELEVATION EXISTS, LOCATE RECEPTACLES TO AVOID ALL MIRRORS, DEVICES, ETC. LOCATED ON BACK WALL OF SINK. DO NOT MOUNT ANY OUTLETS DIRECTLY OVER SINKS.

I.- EC SHALL MARK/IDENTIFY LOCATIONS OF ALL DEVICES IN WALLS PRIOR TO ROUGH-IN. THE EC IS REQUIRED TO WALK THRU WITH OWNER/ARCHITECT TO VERIFY ALL DEVICE LOCATIONS AFTER INSTALLATION OF STUDS AND BEFORE ANY CONDUIT OR BOXES ARE INSTALLED (PER ROOM TYPE). AT THIS TIME, THE OWNER/ARCHITECT MAY RELOCATE ANY DEVICE WITHIN 6' OF ITS PROPOSED LOCATION AT NO ADDITIONAL COST.

J.- REFER TO ARCHITECTURAL REFLECTED PLANS FOR FINAL LIGHT FIXTURE LOCATIONS.

PANEL: E

CONN. LOAD: 116.81 KVA DEMAND LOAD: 93.45 KVA (259.39 A)
MAINS: 400 A MB VOLTAGE: 208Y/120 V, 3 Ø, 4 W
LOCATION: ELECTRICAL RM MOUNTING: SURFACE

REMARKS	KVA	BKR.	CKT. NO.	AND PH.	CKT. NO.	BKR.	KVA	REMARKS
EF-1	0.86-M	20/1	1	A	2	80/3	8.67-M	CU-2
ERV-1 SUPPLY	0.42-M	20/3	3	B	4		8.67-M	-
-	0.42-M		5	C	6		8.67-M	-
-	0.42-M		7	A	8	80/3	8.67-M	CU-2
ERV-1 EXHAUST	0.29-M	20/3	9	B	10		8.67-M	-
-	0.29-M		11	C	12		8.67-M	-
-	0.29-M		13	A	14	20/3		SPARE
CU-1	8.67-M	80/3	15	B	16			-
-	8.67-M		17	C	18			-
-	8.67-M		19	A	20	20/3		SPARE
CU-1	8.67-M	80/3	21	B	22			-
-	8.67-M		23	C	24			-
-	8.67-M		25	A	26	15/2	0.86-M	CU-5
CU-4	1.72-M	20/2	27	B	28		0.86-M	-
-	1.72-M		29	C	30	20/1	1.18-M	CP-1
CU-4	1.72-M	20/2	31	A	32	20/1		SPARE
-	1.72-M		33	B	34	20/1		SPARE
SPARE		20/1	35	C	36	20/1		SPARE
SPACE			37	A	38			SPACE
SPACE			39	B	40			SPACE
SPACE			41	C	42			SPACE

CONTROL ZONE SCHEDULE - RELAY PANEL

ZONE #	RELAY ZONE DESCRIPTION	TOGGLE ON	TOGGLE OFF
1	LOBBY	TOD	TOD
2	CORRIDORS	TOD	TOD
3	EXTERIOR/SITE LTG	PC/TOD	PC/TOD

TOGGLE CONTROL KEY:
TOD - TIME OF DAY
RO - LOW VOLTAGE OVERRIDE SWITCH
PC - EXTERIOR PHOTOCELL
LS - LOCAL SWITCH

RELAY PANEL SCHED. - LVRP

RELAY #	CIRCUIT #	ZONE #
1	N-1	3
2	N-3	2
3	N-5	1
4	E-9	3
5	N-34	3
6	N-36	3
7	N-38	3
8	N-40	3
9	N-41	2
10	SPARE	
11	SPARE	
12	SPARE	
13	SPARE	
14	SPARE	
15	SPARE	
16	SPARE	

LEGEND

(NOT ALL ITEMS MAY APPLY)

AFF	ABOVE FINISHED FLOOR - TO BOTTOM OF ITEM UNLESS INDICATED OTHERWISE ON DRAWINGS
CKT	CIRCUIT
C	CONDUIT
CM	CONSTRUCTION MANAGER
DISC	DISCONNECT
E	EXISTING TO REMAIN
EC	ELECTRICAL CONTRACTOR
EM	EMERGENCY
ES	EQUIPMENT SUPPLIER
FAAP	FIRE ALARM ANNUNCIATOR PANEL
FACP	FIRE ALARM CONTROL PANEL
FPC	FIRE PROTECTION CONTRACTOR
GC	GENERAL CONTRACTOR
GND	GROUND
HC	HEATING CONTRACTOR
MH	MOUNTING HEIGHT TO CENTERLINE OF ITEM UNLESS INDICATED OTHERWISE ON DRAWINGS
NIC	NOT IN CONTRACT
PC	PLUMBING CONTRACTOR
R	DEVICE TO BE REMOVED AND RELOCATED TO ANOTHER AREA
RD	DEVICE RELOCATED FROM ANOTHER AREA
S	SURFACE MOUNTED
SS	STAINLESS STEEL
TYP	TYPICAL
WG	WIRE GUARD SIZED SPECIFICALLY FOR DEVICE IT IS SERVING
WP	WEATHERPROOF
UNO	UNLESS NOTED OTHERWISE
#	PLAN NOTE SYMBOL - APPLIES ONLY TO SHEET ON WHICH NOTE IS SHOWN
#	DETAIL NOTE SYMBOL - APPLIES ONLY TO DETAIL ON WHICH NOTE IS SHOWN
#	EQUIPMENT REFERENCE SYMBOL
#	ROOM NUMBER
B / E2	DETAIL B SHOWN ON SHEET E2
	ELECTRICAL CONNECTION REQUIRED
	EXIT LIGHTING FIXTURE, ARROWS AS INDICATED, CEILING MOUNTED, CONNECT AHEAD OF LOCAL SWITCHING
	EXIT LIGHTING FIXTURE, ARROWS AS INDICATED, WALL MOUNTED AT 3" CLEAR ABOVE DOOR TRIM OR BELOW CEILING AS REQUIRED, CONNECT AHEAD OF LOCAL SWITCHING
b H1 / b B1	LIGHTING FIXTURE; CAPITAL LETTER DENOTES FIXTURE TYPE, LOWER CASE LETTER DENOTES SWITCHING ARRANGEMENT
H1 / B1	LIGHTING FIXTURE ON LIFE SAFETY CIRCUIT
H1 / B1	LIGHTING FIXTURE ON CRITICAL AND/OR EQUIPMENT CIRCUIT
A-1&2	EACH ARROWHEAD REPRESENTS ONE COMPLETE CIRCUIT; CAPITAL LETTER DENOTES PANEL; NUMBER DENOTES CIRCUIT
	WIRE & CONDUIT IN WALL OR ABOVE CEILING. ALL DASH LINES SHALL SIGNIFY WORK TO BE REMOVED.
	WIRE & CONDUIT IN OR BELOW FLOOR SLAB OR BELOW GRADE
CT	CABLE TRAY
J	JUNCTION BOX GENERAL SUBSCRIPTS: CAM - CAMERA LOCATION. COORDINATE WITH TECHNOLOGY. SCREEN - MOTORIZED SCREEN COORDINATE WITH TECHNOLOGY. SOME DO NOT NEED SWITCHES.
	20A-125V SINGLE RECEPTACLE, NEMA 5-20R (18" MH)
	20A-125V DUPLEX RECEPTACLE, NEMA 5-20R (18" MH) GENERAL SUBSCRIPTS: GF - GROUND FAULT CIRCUIT INTERRUPTER WP - WEATHER RESISTANT RECEPTACLE W/ WEATHERPROOF WITH TAYMAC #20310 STANDARD COVER, VERTICAL MOUNT T - TAMPER RESISTANT, HUBBELL #HBL8300SG IG - ISOLATED GROUND CM - CEILING MOUNTED WITH RIGID SUPPORT AV - AUDIO/VISUAL OUTLET LOCATION. PROVIDE RECEPTACLE IN SEPERATE BACKBOX ADJACENT TO AV OUTLET LOCATION AND CIRCUIT AS INDICATED ON PLANS. COORDINATE MOUNTING LOCATION WITH ARCHITECTURAL ELEVATIONS AND CASEWORK PLANS. TV - TELEVISION SERVICE LOCATION (90" M.H. UNLESS NOTED OTHERWISE). PROVIDE RECEPTACLE IN SEPERATE BACKBOX ADJACENT TO TELEVISION SERVICE LOCATION AND CIRCUIT AS INDICATED ON PLANS. VO - TELEVISION SERVICE LOCATION (18"M.H. UNLESS NOTED OTHERWISE). PROVIDE RECEPTACLE IN SEPERATE BACKBOX ADJACENT TO TELEVISION SERVICE LOCATION AND CIRCUIT AS SHOWN ON PLANS.
	SPECIAL PURPOSE RECEPTACLE, REFER TO NOTE ON PLAN (18" M.H. UNO)
	20A-125V DOUBLE DUPLEX RECEPTACLE, NEMA 5-20R, (18" M.H.) TWO-GANG ASSEMBLY
	20A-125V DOUBLE DUPLEX RECEPTACLE, NEMA 5-20R, (46" M.H.) WHERE SHOWN ABOVE COUNTER, COORDINATE HEIGHT WITH CASEWORK CONTRACTOR
	20A-125V DUPLEX RECEPTACLE, NEMA 5-20R (46" MH), WHERE SHOWN ABOVE COUNTER, COORDINATE HEIGHT WITH CASEWORK CONTRACTOR

LEGEND CONTINUED

(NOT ALL ITEMS MAY APPLY)

	20A-125V DUPLEX RECEPTACLE, NEMA 5-20R, IN HUBBELL PFB1 FLUSH FLOOR BRASS COVER PLATE, PROVIDE CARPET FLANGE WHERE REQUIRED, 'Q' DENOTES QUAD OUTLET (S1PFB), 'AV' DENOTES POCKET BOX (HBLCFB401), OR AS INDICATED.
	20A-125V DUPLEX PEDESTAL TYPE FLOOR RECEPTACLE, NEMA 5-20R, IN HUBBELL BA-2527 FLOOR BOX WITH SA-2525 COVER PLATE AND SC-3091 HOUSING, PROVIDE CARPET FLANGE WHERE REQUIRED
	FIRE RATED POKE THRU, SEE PLAN FOR MORE INFORMATION.
	SINGLE POLE WALL SWITCH (46" MH), RATED FOR ONE HORSE POWER. GENERAL SUBSCRIPTS: a - LOWERCASE LETTER DENOTES SWITCHING GROUP 2 - TWO-POLE WALL SWITCH (46" MH) 3 - THREE-WAY WALL SWITCH (46" MH) 4 - FOUR-WAY WALL SWITCH (46" MH) D - LIGHTING DIMMER SWITCH (46" MH) WATTAGE AS REQUIRED F - ELECTRONIC FLUORESCENT DIMMER SWITCH (46" MH), LUTRON NOVA-T (SUBSCRIPT F SHALL BE EQUAL TO #NFT-10-120V-1900W OR #NFT-10-277V-2200W; 277V REQUIRES DOUBLE GANG BOX), COORDINATE SWITCH WITH LIGHT FIXTURE VOLTAGE LV - LOW VOLTAGE M - FLUSH FRACTIONAL HORSEPOWER MOTOR STARTER WITH NEON PILOT LIGHT, ONE-GANG ASSEMBLY (46" MH) OS - AUTOMATIC WALL SWITCH. DUAL TECHNOLOGY WITH 20-MINUTE DELAY. OS2 - 2 CIRCUIT AUTOMATIC WALL SWITCH. DUAL TECHNOLOGY WITH 20-MINUTE DELAY. RO - MOMENTARY CONTACT LOW VOLTAGE 2 HOUR OVERRIDE SWITCH FOR AUTOMATIC LIGHTING CONTROL SYSTEM (46" MH) K - KEY OPERATED WALL SWITCH (46" MH) WP - WEATHERPROOF WALL SWITCH
	GANGED SWITCH ASSEMBLY (46" MH)
	GANGED SWITCH ASSEMBLY FOR MULTI-LEVEL LIGHTING APPLICATIONS, INNER LAMP(S) SHALL BE SWITCHED SEPARATELY FROM OUTER LAMPS, UNLESS NOTED OTHERWISE.
OS	CEILING MOUNTED DUAL TECHNOLOGY OCCUPANCY SENSOR. 20-MINUTE DELAY. 2 - 2 CIRCUIT CEILING MOUNTED OCCUPANCY SENSOR
PC	PHOTO CELL
LV SR	LOW VOLTAGE LIGHTING RELAY, REFER TO TYPICAL PATIENT ROOM LIGHTING DETAIL
	HEAVY DUTY DISCONNECT SWITCH, SEE EQUIPMENT SCHEDULE FOR SOURCES/VOLTAGES AND ALL REQUIREMENTS
	MOTOR STARTER INCLUDING 'HOA', RED-RUN PILOT LIGHT, CONTROL TRANSFORMER, AND AUXILIARY CONTACTS; VOLTAGES AND ALL REQUIREMENTS
	COMBINATION MOTOR STARTER (AS LISTED ABOVE) AND HEAVY DUTY DISCONNECT SWITCH; VOLTAGES AND ALL REQUIREMENTS
	ELECTRIC MOTOR
CUH	CABINET UNIT HEATER, UNIT HEATER, EXHAUST FAN
FC	FAN COIL UNIT
	CIRCUIT BREAKER PANEL (FLUSH MOUNTED)
	CIRCUIT BREAKER PANEL (SURFACE MOUNTED)
	MISCELLANEOUS PANEL (FLUSH MOUNTED)
	MISCELLANEOUS PANEL (SURFACE MOUNTED)
T	LINE VOLTAGE THERMOSTAT (FURNISHED BY HC WIRED AND INSTALLED BY EC)
F	FIRE ALARM HORN & ADA SIGNAL LIGHT (88" MH)
L	FIRE ALARM ADA SIGNALING LIGHT (88" MH)
F	FIRE ALARM SIGNAL PULL-STATION STATION (46" MH)
F K	KEY OPERATED FIRE ALARM SIGNALING STATION (46" MH)
S	CEILING MOUNTED SMOKE DETECTOR. SUBSCRIPT 'ER' INDICATES ELEVATOR RECALL. SUBSCRIPT 'PA' INDICATES PRE-ACTION SYSTEM
H	CEILING MOUNTED HEAT DETECTOR
S	IN-DUCT SMOKE DETECTOR, NOT ALL DEVICES SHOWN, REFER TO DETAILS
S	DUCT MOUNTED SMOKE DETECTOR, NOT ALL DEVICES SHOWN, REFER TO DETAILS
D	ELECTROMAGNETIC DOOR HOLDER (WALL MOUNTED)
W	WATER FLOW SWITCH
R	FIRE ALARM CONTROLLED PROGRAMMABLE RELAY
V	VALVE TAMPER SWITCH
SD	SMOKE DAMPER, NOT ALL DEVICES SHOWN, REFER TO DETAILS
FS	FIRE SHUTTER
	PUSH-BUTTON (46" MH) FURNISHED BY OTHERS
B	BUZZER, SEE PLAN NOTES
B	EXTERIOR WEATHERPROOF FIRE ALARM BELL
CB	CIRCUIT BREAKER ENCLOSED IN A NEMA 1 HOUSING
ZAM	ADDRESSABLE FIRE ALARM MODULE
PR	PROXIMITY READER
DC	DOOR CONTACT
ES	ELECTRIC STRIKE
PTZ	PAN TILT ZOOM CAMERA
P	SECURITY SYSTEM WIRELESS PANIC BUTTON REFER TO SPEC SECTION 28 13 11
ML	MAG LOCK
SR	SMOKE DETECTOR TEST STATION

LEGEND CONTINUED

(NOT ALL ITEMS MAY APPLY)

CB	EMERGENCY CODE BLUE BUTTON (46" MH)
NP	NURSE CALL PATIENT STATION (46" MH)
NM	NURSE CALL MASTER CONTROL STATION ("W" WHEN SHOWN INDICATES WALL MOUNTED AT 46" MH, "D" WHEN SHOWN INDICATES DESK MOUNTED)
NS	NURSE CALL STAFF STATION (46" MH)
ND	NURSE CALL DUTY STATION (46" MH)
JB	BED JACK - 37 PIN, LOCATED IN BED LOCATOR
CP	CODE PINK BUTTON (46" MH)
SA	NURSE CALL STAFF ASSIST STATION (46" MH)
T	EMERGENCY NURSE CALL STATION WITH PULL CORD FOR PATIENT USE (33" MH IN TOILET ROOMS, 90" MH IN SHOWERS AND WET AREAS, 46" MH IN ALL OTHER AREAS)
Ø	CEILING MOUNTED NURSE CALL DOME LIGHT
Ø	WALL MOUNTED NURSE CALL DOME LIGHT (90" MH)
$Ø_B$	CEILING MOUNTED COMBINATION DOME LIGHT AND BUZZER
$Ø_Z$	CEILING MOUNTED NURSE CALL ZONE LIGHT
	SIMPLEX 6311-9021 ELAPSED TIME INDICATOR CLOCK (90" M.H.) AND 6311-9502 CONTROLLER SWITCH AT 46" M.H. (OR EQUAL).
EL	POWER SUPPLY FOR ELECTRIC LATCH. SEE NOTATION FOR CIRCUITING.
CS	FLUSH MOUNTED CEILING SPEAKER
CC	SEMI-RECESSED CEILING MOUNT COLOR CCTV CAMERA, SUBSCRIPT INDICATES BASE LENS SIZE
TV	TELEVISION SERVICE LOCATION. PROVIDE 2-GANG BACK BOX WITH GANG DIVIDER AT 90" MH, PROVIDE (1) 1" BUSHED CONDUIT FROM COMMUNICATIONS SIDE OF BOX TO ABOVE ACCESSIBLE CEILING, PROVIDE 1" CONDUIT SLEEVE FROM ABOVE ACCESSIBLE CEILING TO LOCAL CORRIDOR ACCESSIBLE CEILING, PROVIDE (1) "F" TYPE COAXIAL VIDEO OUTLET AND REQUIRED INTERFACE FOR PILLOW SWITCH CONTROL, CABLED COMPLETE PER SPECIFICATIONS AND PLAN DETAILS, PROVIDE DUPLEX RECEPTACLE IN POWER SIDE OF BOX AND CIRCUIT AS SHOWN ON PLANS
	CAT5e PHONE/DATA OUTLET, 18"MOUNTING HEIGHT, DOUBLE GANG BOX, TWO CABLES TO EACH LOCATION IDENTIFIED ON DRAWINGS. EACH LOCATION SHALL RECIEVE ONE(1) BLUE CABLE AND ONE (1) YELLOW CABLE. EXTEND A 1" BUSHED CONDUIT WITH PULL CORD OUT ABOVE NEAREST ACCESSIBLE CEILING GENERAL SUBSCRIPTS: CM- CEILING MOUNTED WITH RIGID SUPPORT.

SMOKE DETECTOR WIRING DIA. /

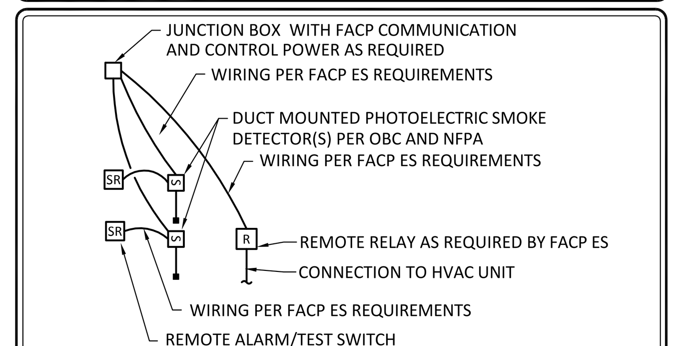

OPERATION:
1.- DUCT SMOKE DETECTOR UPON ACTIVATION IS ACTIVATE FIRE ALARM SYSTEM. UPON ACTIVATION OF FIRE ALARM, FIRE ALARM RELAYS ARE TO CLOSE TRIPPING SHUNT TRIP BREAKERS TO HEATING PANELS CONTROLLING ALL FAN POWER VAV BOXES AND RELAY AT RTU'S ARE TO CLOSE DISABLING RTU. VERIFY RTU WIRING WITH HC.
SCALE: NONE

DESIGNER/ENGINEER SH
CAD OPERATOR SH
QA/QC CHECKER TS

Revisions	Date
ISSUED FOR BID	02/28/2012
PRE-BID AMENDMENT, REV 1	04/26/2012
PRE-BID AMENDMENT	05/10/2012

Dynamix Engineering Ltd.
Facility Engineering Consultants
855 Grandview Avenue, Third Floor Columbus, Ohio 43215
Phone: (614)443-1178 · Fax: (614)443-1594 · Email: dynamix@dynamix-ltd.com
Comm. No.: 110028

Revised By:

STATE OF OHIO
MACE E-50556
MONTGOMERY E-66852
GRIFFIN E-57049
REGISTERED PROFESSIONAL ENGINEERS
Professional Seal

Drawing Title: ELECTRICAL SCHEDULES AND DETAILS
SCALE: NONE

Approved: Project Manager RANDI FIORINA

Approved: Service Chief GARY ABREU

Project Title: OPEN MRI SITE PREP

Building Number: 335 | Checked: DYNAMIX | Drawn: SH

Location: 4100 WEST THIRD STREET DAYTON, OH 45428

Date: 02-28-2012
Project No. 552-CSI-101
Drawing No. E0-00

VAMC, DAYTON
Department of Veterans Affairs
VA

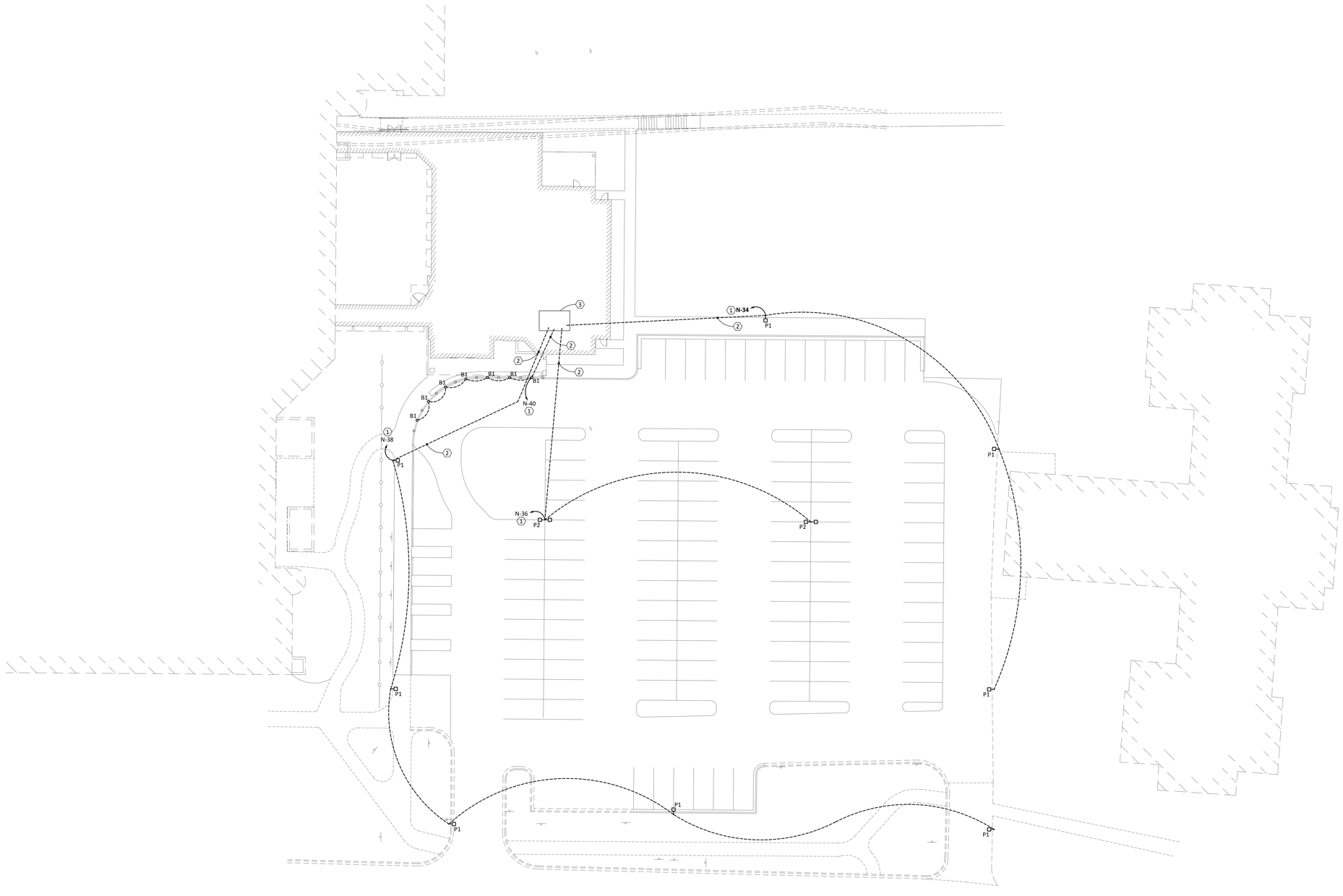

NORTH

SITE ELECTRICAL PLAN

SCALE: 1"=20'-0"

PLAN NOTES

1.- CONNECT CIRCUIT THROUGH LOW VOLTAGE RELAY PANEL LVRP. USE MINIMUM (2) #8, (1) #8G IN 1" CONDUIT FOR SITE LIGHTING FEEDERS.

2.- PRELIMINARY UNDERGROUND CONDUIT RUNS.

3.- LOCATION OF ELECTRIC ROOM.

BOLLARD BASE — A/E0-01

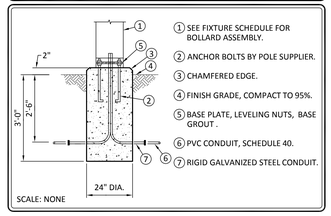

1. SEE FIXTURE SCHEDULE FOR BOLLARD ASSEMBLY.
2. ANCHOR BOLTS BY POLE SUPPLIER.
3. CHAMFERED EDGE.
4. FINISH GRADE, COMPACT TO 95%.
5. BASE PLATE, LEVELING NUTS, BASE GROUT .
6. PVC CONDUIT, SCHEDULE 40.
7. RIGID GALVANIZED STEEL CONDUIT.

SCALE: NONE

POLE BASE - GRASS LOCATION — B/E0-01

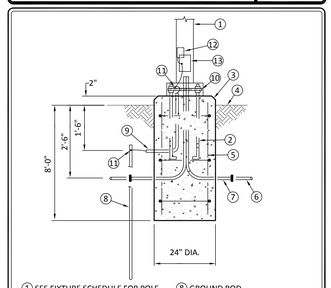

1. SEE FIXTURE SCHEDULE FOR POLE AND FIXTURE ASSEMBLY.
2. ANCHOR BOLTS BY POLE SUPPLIER, WELD TO REBARS.
3. CHAMFERED EDGE.
4. FINISH GRADE, COMPACT TO 95%.
5. #4 REINFORCING BARS VERTICALLY ON #3 STIRRUPS AT 18" O.C.
6. PVC CONDUIT, SCHEDULE 40.
7. RIGID GALVANIZED STEEL CONDUIT.
8. GROUND ROD.
9. 1/2" PVC GROUND CONDUCTOR SLEEVE WITH #8 GROUND CONDUCTOR.
10. BASE PLATE, LEVELING NUTS, GROUT BASE.
11. EXOTHERMICALLY WELDED GROUND CONNECTION.
12. LIGHTNING ARRESTOR.
13. HANDHOLE.

SCALE: NONE

POLE BASE - PAVEMENT LOCATION — C/E0-01

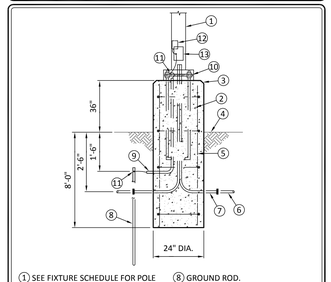

1. SEE FIXTURE SCHEDULE FOR POLE AND FIXTURE ASSEMBLY.
2. ANCHOR BOLTS BY POLE SUPPLIER, WELD TO REBARS.
3. CHAMFERED EDGE.
4. FINISH GRADE, COMPACT TO 95%.
5. #4 REINFORCING BARS VERTICALLY ON #3 STIRRUPS AT 18" O.C.
6. PVC CONDUIT, SCHEDULE 40.
7. RIGID GALVANIZED STEEL CONDUIT.
8. GROUND ROD.
9. 1/2" PVC GROUND CONDUCTOR SLEEVE WITH #8 GROUND CONDUCTOR.
10. BASE PLATE, LEVELING NUTS, GROUT BASE.
11. EXOTHERMICALLY WELDED GROUND CONNECTION.
12. LIGHTNING ARRESTOR.
13. HANDHOLE.

SCALE: NONE

DESIGNER/ENGINEER JH
CAD OPERATOR JH
QAQC/CHECKER TS

Revisions	Date
ISSUED FOR BID	02/28/2012
PRE-BID AMENDMENT, REV 1	04/26/2012
PRE-BID AMENDMENT	05/10/2012

Dynamix Engineering Ltd.
Facility Engineering Consultants
855 Grandview Avenue, Third Floor Columbus, Ohio 43215
Phone: (614)443-1178 · Fax: (614)443-1594 · Email: dynamix@dynamix-ltd.com
Comm. No.: 110028

STATE OF OHIO — MACE E-50556 · MONTGOMERY E-66852 · GRIFFIN E-57049 — REGISTERED PROFESSIONAL ENGINEER

Professional Seal

Revised By:

Drawing Title	ELECTRICAL SITE PLAN — SCALE: 1"=20'-0"
Project Title	OPEN MRI SITE PREP
Approved: Project Manager	RANDI FIORINA
Approved: Service Chief	GARY ABREU
Building Number	335
Checked	DYNAMIX
Drawn	JH
Location	4100 WEST THIRD STREET DAYTON, OH 45428
Date	02-28-2012
Project No.	552-CSI-101
Drawing No.	E0-01

VAMC, DAYTON

VA Department of Veterans Affairs

VA FORM 08-6231, OCT 1978

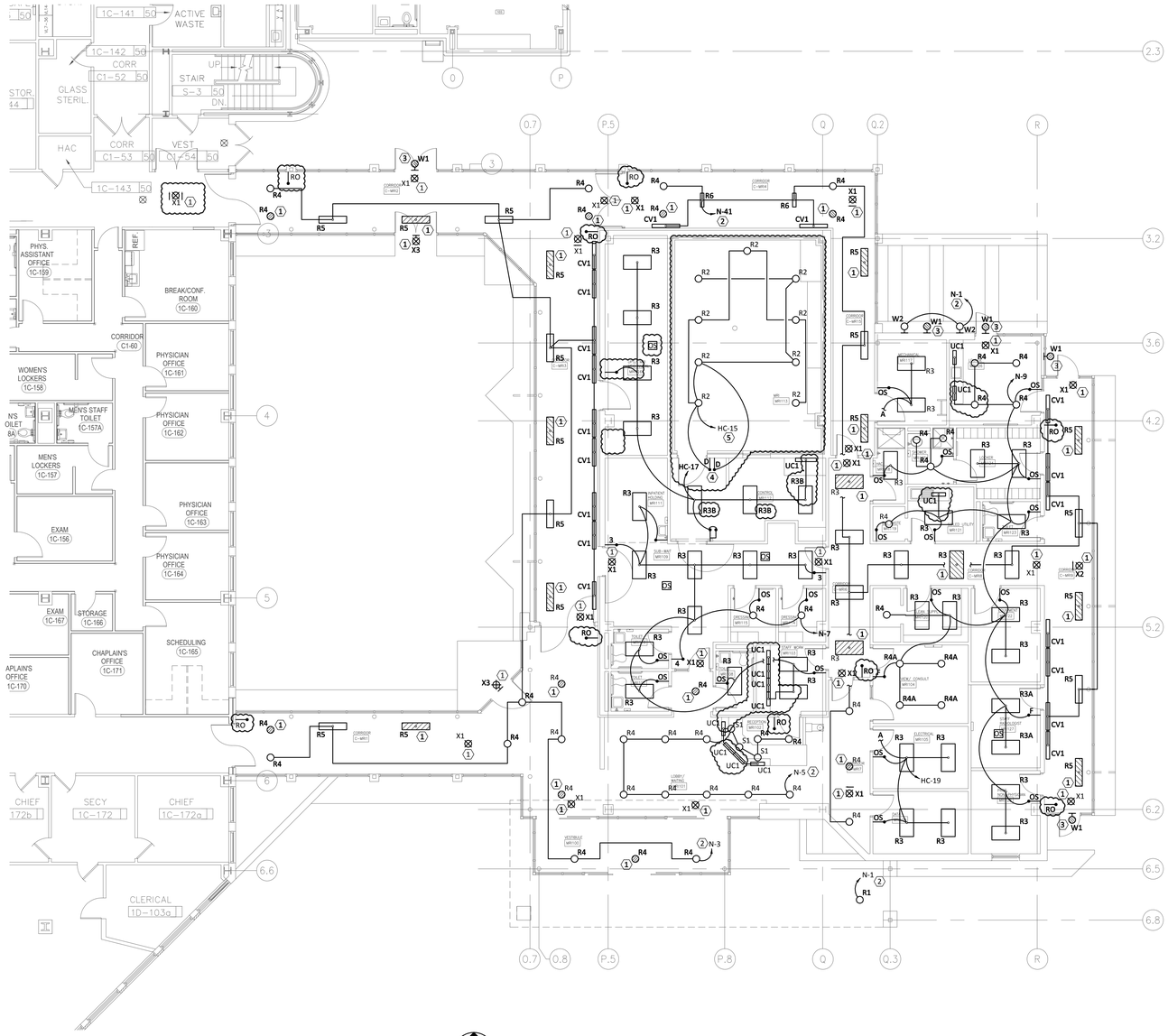

NORTH

FIRST FLOOR LIGHTING PLAN

SCALE: 1/8"=1'-0"

GENERAL NOTES

A.- COORDINATE FINAL LIGHTING FIXTURE LOCATIONS WITH REFLECTED CEILING PLAN.

PLAN NOTES

1.- CONNECT FIXTURE TO EMERGENCY CIRCUIT LS-1.

2.- CONNECT CIRCUIT THROUGH LOW VOLTAGE RELAY PANEL LVRP.

3.- CONNECT EXTERIOR LIGHTING FIXTURE TO EMERGENCY CIRCUIT LS-3. CONNECT CIRCUIT THROUGH LOW VOLTAGE RELAY PANEL LVRP.

4.- PROVIDE DC DIMMING SYSTEM TO CONTROL LIGHTING IN MRI ROOM. LOCATE DIMMER BOXES IN MRI EQUIPMENT ROOM AND DIMMER CONTROLS IN MRI CONTROL ROOM. PROVIDE (2) 600 WATT CONTROLLED POWER COMPANY SUITELITE SERIES "SCLU" OR EQUAL, ONE FOR EACH DIMMING CIRCUIT.

5.- ALL CIRCUITS, SWITCH LEGS, ETC. SERVING THIS ROOM MUST RUN TRHOUGH RF LINE FILTER PANEL PROVIDED BY OTHERS.

DESIGNER/ENGINEER JH
CAD OPERATOR JH
QAQC/CHECKER TS

Revisions	Date
ISSUED FOR BID	02/28/2012
PRE-BID AMENDMENT, REV 1	04/26/2012
PRE-BID AMENDMENT	05/10/2012

Dynamix Engineering Ltd.
Facility Engineering Consultants
855 Grandview Avenue, Third Floor Columbus, Ohio 43215
Phone: (614)443-1178 · Fax: (614)443-1594 · Email: dynamix@dynamix-ltd.com
Comm. No.: 110028

STATE OF OHIO · MACE E-50556 · MONTGOMERY E-46852 · GRIFFIN E-57049 · REGISTERED PROFESSIONAL ENGINEER

Professional Seal

Revised By:

Drawing Title: FIRST FLOOR LIGHTING PLAN
SCALE: 1/8"=1'-0"

Project Title: OPEN MRI SITE PREP

Date: 02-28-2012

Project No. 552-CSI-101

Approved: Project Manager: RANDI FIORINA

Building Number: 335

Checked: DYNAMIX

Drawn: JH

Approved: Service Chief: GARY ABREU

Location: 4100 WEST THIRD STREET DAYTON, OH 45428

Drawing No. E1-01

VAMC, DAYTON

VA Department of Veterans Affairs

VA FORM 08-6231, OCT 1978

EQUIPMENT STARTERS AND DISCONNECTS

EQUIPMENT DESIGNATION	EQUIPMENT SERVED	HP (KVA)	NOTES	VOLTAGE					STARTER									DISCONNECT MEANS							CONTROL				FEEDER SIZE
				120V-1PH	208V-1PH	208V-3PH	277V-1PH	480V-3PH	NEMA SIZE	MAGNETIC	MANUAL	MANUAL STARTER AND CONTACTOR	VAR FREQ DRIVE	INTEGRAL OVERLD	IN MCC	SEE NOTE	FURNISHED BY	DISCONNCET SW	MANUAL STARTER	CORD & PLUG	STARTER/DISC	SWITCH OR BRKER	SEE NOTE	FURNISHED BY	MANUAL	INTEGRAL	SEE NOTE	FURNISHED BY	
CP-1	CONDENSATE RETURN PUMP	1/2	-	●										●			EC		●					EC		●		HC	2 - #12, 1 - #12 GRD, 3/4" C
CUH-1	ELEC CABINET UNIT HEATER	(5)	-			●								●			EC	●					6	EC		●		HC	3 - #8, 1 - #10 GRD, 3/4" C
EWH-1	ELEC WALL HEATER	12.5 A	-	●										●			EC		●					EC		●		HC	2 - #12, 1 - #12 GRD, 3/4" C
CU-1	COND. UNIT SUPPLY (ROOF)	72.2 A	1			●					●						EC	●					2	EC		●		HC	3 - #2, 1 - #8 GRD, 1-1/4" C
CU-1	COND. UNIT RETURN (ROOF)	72.2 A	1			●					●						EC	●					2	EC		●		HC	3 - #2, 1 - #8 GRD, 1-1/4" C
CU-2	COND. UNIT SUPPLY (ROOF)	72.2 A	1			●					●						EC	●					2	EC		●		HC	3 - #2, 1 - #8 GRD, 1-1/4" C
CU-2	COND. UNIT RETURN (ROOF)	72.2 A	1			●					●						EC	●					2	EC		●		HC	3 - #2, 1 - #8 GRD, 1-1/4" C
CU-3	CONDENSING UNIT (ROOF)	16.5 A	-		●						●						EC	●					3	EC		●		HC	2 - #12, 1 - #12 GRD, 3/4" C
CU-4	CONDENSING UNIT (ROOF)	16.5 A	-		●						●						EC	●					3	EC		●		HC	2 - #12, 1 - #12 GRD, 3/4" C
CU-5	CONDENSING UNIT (ROOF)	8.3 A	-		●						●						EC	●					3	EC		●		HC	2 - #12, 1 - #12 GRD, 3/4" C
FC-1	VRV FAN COIL	(0.35)	5		●									●			EC					●	4	EC		●		HC	2 - #12, 1 - #12 GRD, 3/4" C
FC-2	VRV FAN COIL	(0.35)	5		●									●			EC					●	4	EC		●		HC	2 - #12, 1 - #12 GRD, 3/4" C
FC-3	VRV FAN COIL	(0.09)	5		●									●			EC					●	4	EC		●		HC	2 - #12, 1 - #12 GRD, 3/4" C
FC-4	VRV FAN COIL	(0.09)	5		●									●			EC					●	4	EC		●		HC	2 - #12, 1 - #12 GRD, 3/4" C
FC-5	VRV FAN COIL	(0.09)	5		●									●			EC					●	4	EC		●		HC	2 - #12, 1 - #12 GRD, 3/4" C
FC-6	VRV FAN COIL	(0.09)	5		●									●			EC					●	4	EC		●		HC	2 - #12, 1 - #12 GRD, 3/4" C
FC-7	VRV FAN COIL	(0.09)	5		●									●			EC					●	4	EC		●		HC	2 - #12, 1 - #12 GRD, 3/4" C
FC-8	VRV FAN COIL	(0.09)	5		●									●			EC					●	4	EC		●		HC	2 - #12, 1 - #12 GRD, 3/4" C
FC-9	VRV FAN COIL	(0.35)	5		●									●			EC					●	4	EC		●		HC	2 - #12, 1 - #12 GRD, 3/4" C
FC-10	VRV FAN COIL	(0.35)	5		●									●			EC					●	4	EC		●		HC	2 - #12, 1 - #12 GRD, 3/4" C
FC-11	VRV FAN COIL	(0.35)	5		●									●			EC					●	4	EC		●		HC	2 - #12, 1 - #12 GRD, 3/4" C
FC-12	VRV FAN COIL	(0.35)	5		●									●			EC					●	4	EC		●		HC	2 - #12, 1 - #12 GRD, 3/4" C
FC-13	VRV FAN COIL	(0.09)	5		●									●			EC					●	4	EC		●		HC	2 - #12, 1 - #12 GRD, 3/4" C
FC-14	VRV FAN COIL	(0.09)	5		●									●			EC					●	4	EC		●		HC	2 - #12, 1 - #12 GRD, 3/4" C
FC-15	VRV FAN COIL	(0.09)	5		●									●			EC					●	4	EC		●		HC	2 - #12, 1 - #12 GRD, 3/4" C
FC-16	VRV FAN COIL	(0.35)	5		●									●			EC					●	4	EC		●		HC	2 - #12, 1 - #12 GRD, 3/4" C
FC-17	VRV FAN COIL	(0.35)	5		●									●			EC					●	4	EC		●		HC	2 - #12, 1 - #12 GRD, 3/4" C
FC-18	VRV FAN COIL	(0.09)	5		●									●			EC					●	4	EC		●		HC	2 - #12, 1 - #12 GRD, 3/4" C
FC-19	VRV FAN COIL	(0.35)	5		●									●			EC					●	4	EC		●		HC	2 - #12, 1 - #12 GRD, 3/4" C
FC-20	VRV FAN COIL	(0.09)	5		●									●			EC					●	4	EC		●		HC	2 - #12, 1 - #12 GRD, 3/4" C
EF-1	MRI EXHAUST FAN (ROOF)	1/3	-	●										●			EC		●					EC		●		HC	2 - #12, 1 - #12 GRD, 3/4" C
ERV-1	ENERGY RECOV. VENT. EXH.	1/2	-			●					●						EC	●					6	EC		●		HC	3 - #12, 1 - #12 GRD, 3/4" C
ERV-1	ENERGY RECOV. VENT. SUPPLY	3/4	-			●					●						EC	●					6	EC		●		HC	3 - #12, 1 - #12 GRD, 3/4" C
WH	HOT WATER HEATER	-	-	●										●			EC		●					EC		●		PC	2 - #12, 1 - #12 GRD, 3/4" C
CP	HOT WATER CIRC PUMP	1/6	-	●										●			EC		●					EC		●		PC	2 - #12, 1 - #12 GRD, 3/4" C
MV1	THERMOSTATIC MIXING VALVE	-	-	●										●			EC		●					EC		●		PC	2 - #12, 1 - #12 GRD, 3/4" C

NOTES

1.- UNIT CONSISTS OF TWO SEPARATE CONDENSING UNITS. EACH REQUIRES A SEPARATE ELECTRICAL CONNECTION.

2.- 100 A, 250 V, 3P-3W DISCONNECT SWITCH IN NEMA 3R ENCLOSURE.

3.- 30 A, 250 V, 3P-3W DISCONNECT SWITCH IN NEMA 3R ENCLOSURE.

4.- 20 A, 2-P MOTOR RATED SWITCH IN NEMA1 ENCLOSURE

5.- PROVIDE POWER CONNECTION FOR VRF SYSTEM BRANCH SELECTION CONTROLLER FROM LOAD SIDE OF DISCONNECT SWITCH.

6.- 30 A, 250 V, 3P-3W DISCONNECT SWITCH IN NEMA 1 ENCLOSURE.

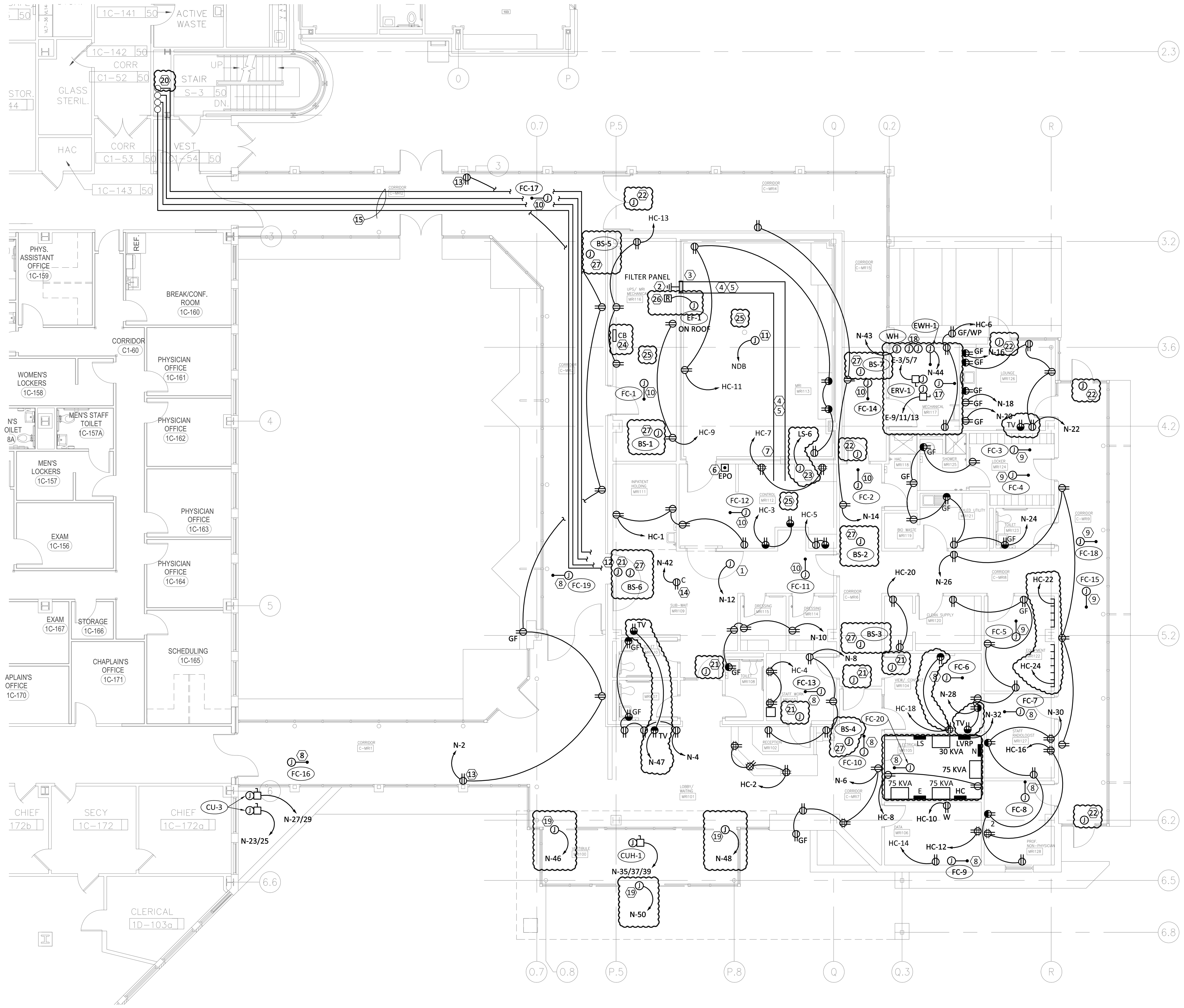

FIRST FLOOR POWER PLAN

SCALE: 1/8"=1'-0"

NORTH

PLAN NOTES ⬡

1.- ELECTRICAL CONNECTION FOR METAL DETECTOR.

2.- PROVIDE 2/0 RF SHEILDING GROUND IN ADDITION TO SERVICE FEED GROUND AND TO BUILDING STEEL.

3.- LINE FILTER BOX SUPPLIED AND INSTALLED BY VENDOR. ALL WIRING/CABLING INTO SCAN ROOM SHALL PASS THROUGH FILTER BOX (INCLUDING LIGHTING, POWER, NURSE CALL, ETC.)

4.- ALUMINUM TRENCH DUCT IN SLAB. TRENCH DUCT TRANSITIONS TO WALL DUCT TO FILTER PANEL. SEE MRI SITE SPECIFIC DRAWINGS FOR MORE INFO.

5.- PROVIDE 2" CONDUIT FROM CONTROL ROOM JUNCTION BOX TO FILTER PANEL. PROVIDE A 2" GROMMETED OPENING IN COVER OF ALUMINUM TRENCH FOR INJECTOR IN SCAN ROOM AND AT CONTROL DESK.

6.- PUSHBUTTON TO OPERATE SHUNT TRIP BREAKER.

7.- PROVIDE WALL DUCT AT CONTROL DESK. RUN WALL DUCT UP WALL AND PROVIDE (3) 3" CONDUITS BACK TO EQUIPMENT ROOM.

8.- CONNECT VRV FAN COIL UNIT TO CIRCUIT N-11/13.

9.- CONNECT VRV FAN COIL UNIT TO CIRCUIT N-15/17.

10.- CONNECT VRV FAN COIL UNIT TO CIRCUIT N-19/21.

11.- POWER CONNECTION FOR MRI UNIT. CONNECT CIRCUIT TO PANEL NDB IN ROOM BC-119.

12.- EXTEND FEEDERS TO NEW PANELS IN ELECTRIC ROOM MRI105.

13.- MOUNT DEVICE IN 2"x4" BACK BOX.

14.- CEILING MOUNTED RECEPTACLE FOR PATIENT LIFT. COORDINATE WITH EQUIPMENT.

15.- FEEDERS FOR NEW PANELS. REFER TO SHEETS E1-03 AND E3-00 FOR SIZES AND DISTRIBUTION PANELBOARD LOCATIONS.

16.- NOT USED.

17.- POWER CONNECTION FOR CP-1 (120 V, 1/2 HP). CONNECT TO CIRCUIT E-30.

18.- POWER CONNECTIONS FOR CIRCULATION PUMP CP (120 V) AND MIXING VALVE MV1 (120 V). CIRCUIT TO PANEL N-45.

19.- POWER CONNECTION FOR AUTOMATIC DOORS.

20.- CONDUIT TO BASEMENT. SEE SHEET E1-04 FOR CONTINUATION.

21.- POWER FOR ACCESS CONTROL AND ELECTRIC DOOR LATCHES (120 V). CONNECT TO CIRCUIT LS-2.

22.- POWER FOR ACCESS CONTROL AND ELECTRIC DOOR LATCHES (120 V). CONNECT TO CIRCUIT LS-4.

23.- POWER CONNECTION FOR INTERCOM SYSTEM (120 V).

24.- 250 A, 3 POLE SHUNT TRIP CIRCUIT BREAKER FOR MRI UNIT. OPERATED BY EPO IN CONTROL ROOM. RUN (5) 250 KCMIL CONDUCTORS WITH #4 GROUND WIRE IN 2" CONDUIT BACK TO MRI BREAKER IN SWITCHBOARD NDB.

25.- SEE SITE SPECIFIC VENDOR DRAWINGS FOR CONDUIT RUNS, ADDITIONAL DEVICES, REQUIREMENTS, ETC. IN THIS SPACE.

26.- PROVIDE TWO RELAYS AND SWITCH FOR FAN. RELAYS SHALL BE 120 V AC COIL, RATED AT 1 HP, 120 V CONTACT CONTROLLED BY MRI UNIT. ONE RELAY IS FOR MRI EQUIPMENT TO TURN ON FAN AND SECOND RELAY IS FOR MANUAL CONTROL. CONTROL FURNISHED BY VENDOR. PROVIDE CONDUIT TO O2 SENSOR AND SWITCH TO RELAY (THROUGH FILTER PANEL). COORDINATE LOCATION IN FIELD.

27.- PROVIDE CONNECTION FOR VRV SYSTEM BRANCH SELECTOR CONTROLLER FROM LOAD SIDE OF DISCONNECT SWITCH OF NEAREST VRV FAN COIL UNIT.

DESIGNER/ENGINEER JH
CAD OPERATOR JH
QAQC/CHECKER TS

Revisions	Date
ISSUED FOR BID	02/28/2012
PRE-BID AMENDMENT, REV 1	04/26/2012
PRE-BID AMENDMENT	05/10/2012

Dynamix Engineering Ltd.
Facility Engineering Consultants
855 Grandview Avenue, Third Floor Columbus, Ohio 43215
Phone: (614)443-1178 · Fax: (614)443-1594 · Email: dynamix@dynamix-ltd.com
Comm. No.: 110028

STATE OF OHIO — MACE E-50556 — MONTGOMERY E-66852 — GRIFFIN E-57049 — REGISTERED PROFESSIONAL ENGINEERS

Professional Seal

Revised By:

Drawing Title: FIRST FLOOR POWER PLAN
SCALE: 1/8"=1'-0"

Project Title: OPEN MRI SITE PREP

Date: 02-28-2012

Project No.: 552-CSI-101

Approved: Project Manager — RANDI FIORINA

Building Number: 335 | Checked: DYNAMIX | Drawn: JH

Drawing No.: E1-02

Approved: Service Chief — GARY ABREU

Location: 4100 WEST THIRD STREET, DAYTON, OH 45428

VAMC, DAYTON

Department of Veterans Affairs

VA

VA FORM 08-6231, OCT 1978

PLAN NOTES

1.- PROVIDE PENDANT SPEAKER ABOVE CEILING.

2.- PUSHBUTTON DOOR RELEASE FOR THIS DOOR.

3.- THIS ROOM TO BE TREATED AS A "TECHNOLOGY CLOSET" AS DEFINED BY THE SPECIFICATIONS. PROVIDE EQUIPMENT RACK/CABINET, SWITCHES, PATCH PANELS, WIRE MANAGEMENT, ETC. AS DEFINED IN THE SPECIFICATIONS. RUN 62.5/125 TWELVE STRAND MULTIMODE FIBER OPTIC CABLE FROM ROOM 1C-152 TO NEW TR.

4.- FIRE ALARM PANEL. TIE INTO EXISTING FIRE ALARM SYSTEM IN ROOM 1C-149.

FIRST FLOOR SYSTEMS PLAN

SCALE: 1/8"=1'-0"

DESIGNER/ENGINEER	JH
CAD OPERATOR	JH
QAQC/CHECKER	TS

Revisions	Date
ISSUED FOR BID	02/28/2012
PRE-BID AMENDMENT, REV 1	04/26/2012
PRE-BID AMENDMENT	05/10/2012

Dynamix Engineering Ltd.
Facility Engineering Consultants
855 Grandview Avenue, Third Floor Columbus, Ohio 43215
Phone: (614)443-1178 · Fax: (614)443-1594 · Email: dynamix@dynamix-ltd.com
Comm. No.: 110028

STATE OF OHIO · MACE E-50556 · MONTGOMERY E-66852 · GRIFFIN E-57049 · REGISTERED PROFESSIONAL ENGINEERS

Professional Seal

Revised By:

Drawing Title	Project Title	Date
FIRST FLOOR SYSTEMS PLAN SCALE: 1/8"=1'-0"	OPEN MRI SITE PREP	02-28-2012
Approved: Project Manager RANDI FIORINA	Building Number 335 · Checked DYNAMIX · Drawn JH	Project No. 552-CSI-101
Approved: Service Chief GARY ABREU	Location 4100 WEST THIRD STREET DAYTON, OH 45428	Drawing No. E1-03

VAMC, DAYTON

VA Department of Veterans Affairs

VA FORM 08-6231, OCT 1978

PLAN NOTES

1.- FEEDERS FROM EXISTING PANELS TO NEW PANELS IN MRI BUILDING. ROUTE UP CHASE ADJACENT TO EXIT STAIRWAY.

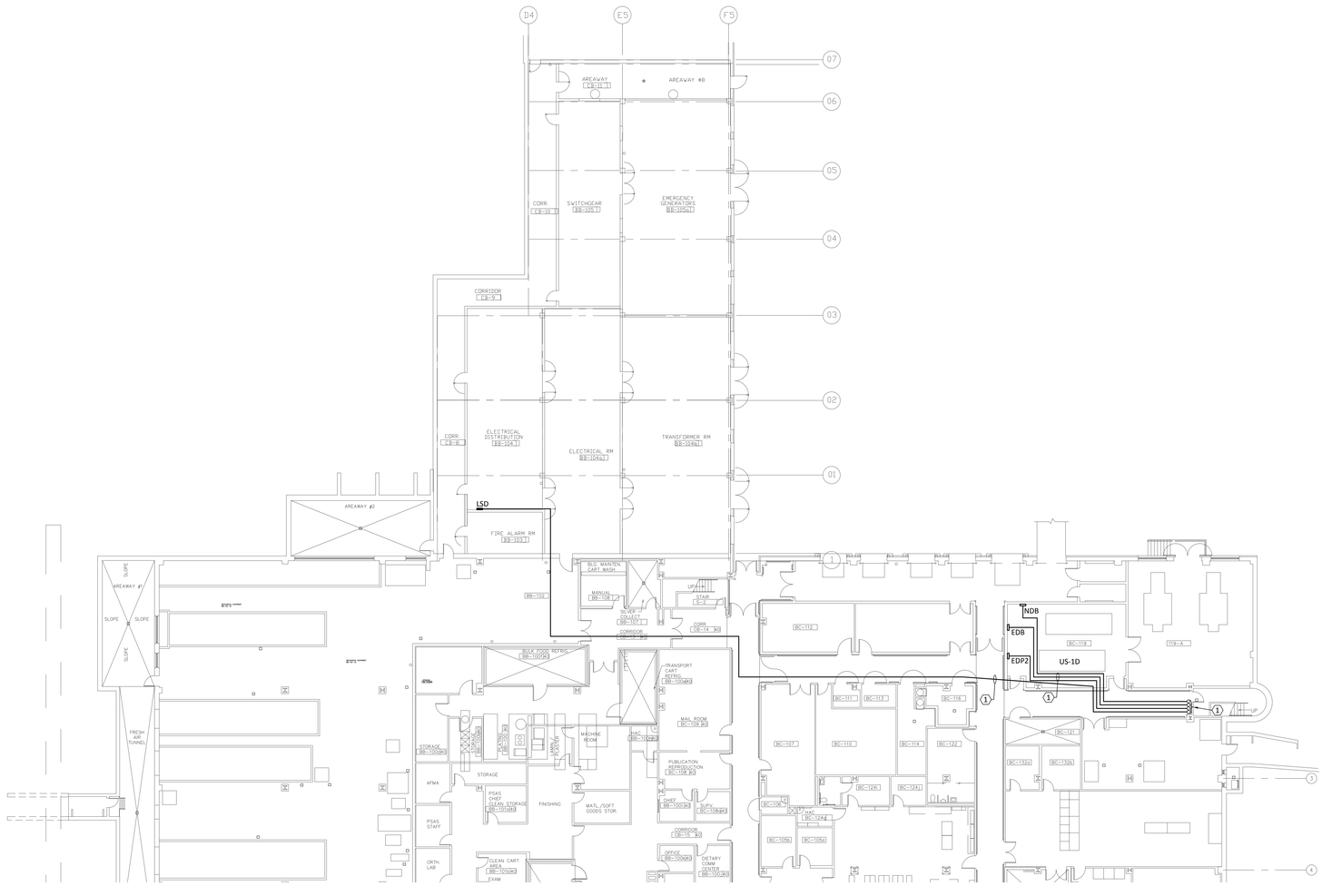

NORTH

BASEMENT ELECTRICAL PLAN

SCALE: 1/16"=1'-0"

DESIGNER/ENGINEER	JH
CAD OPERATOR	JH
QAQC/CHECKER	TS

Revisions	Date
ISSUED FOR BID	02/28/2012
PRE-BID AMENDMENT, REV 1	04/26/2012
PRE-BID AMENDMENT	05/10/2012

Dynamix Engineering Ltd.
Facility Engineering Consultants
855 Grandview Avenue, Third Floor Columbus, Ohio 43215
Phone: (614)443-1178 · Fax: (614)443-1594 · Email: dynamix@dynamix-ltd.com
Comm. No.: 110028

STATE OF OHIO · MACE E-50556 · MONTGOMERY E-66852 · GRIFFIN E-57049 · REGISTERED PROFESSIONAL ENGINEERS

Professional Seal

Revised By:

Drawing Title	Project Title	Date
BASEMENT ELECTRICAL PLAN SCALE: 1/16"=1'-0"	OPEN MRI SITE PREP	02-28-2012
		Project No. 552-CSI-101
Approved: Project Manager RANDI FIORINA	Building Number 335 · Checked DYNAMIX · Drawn JH	Drawing No. E1-04
Approved: Service Chief GARY ABREU	Location 4100 WEST THIRD STREET DAYTON, OH 45428	

VAMC, DAYTON

VA Department of Veterans Affairs

VA FORM 08-6231, OCT 1978

ROOF PLAN NOTES

1 - 32W COMPACT FLUORESCENT JELLY JAR LIGHT FIXTURE (120 V), SWITCH, AND RECEPTACLE FOR LIGHT FIXTURE FOR EQUIPMENT MAINTENANCE. MOUNT ON UNISTRUT NEAR EQUIPMENT. VERIFY LOCATION IN FIELD. CIRCUIT TO N-31 WITH (2) #12 AWG CONDUCTORS AND (1) #12 GROUND IN 3/4" CONDUIT.

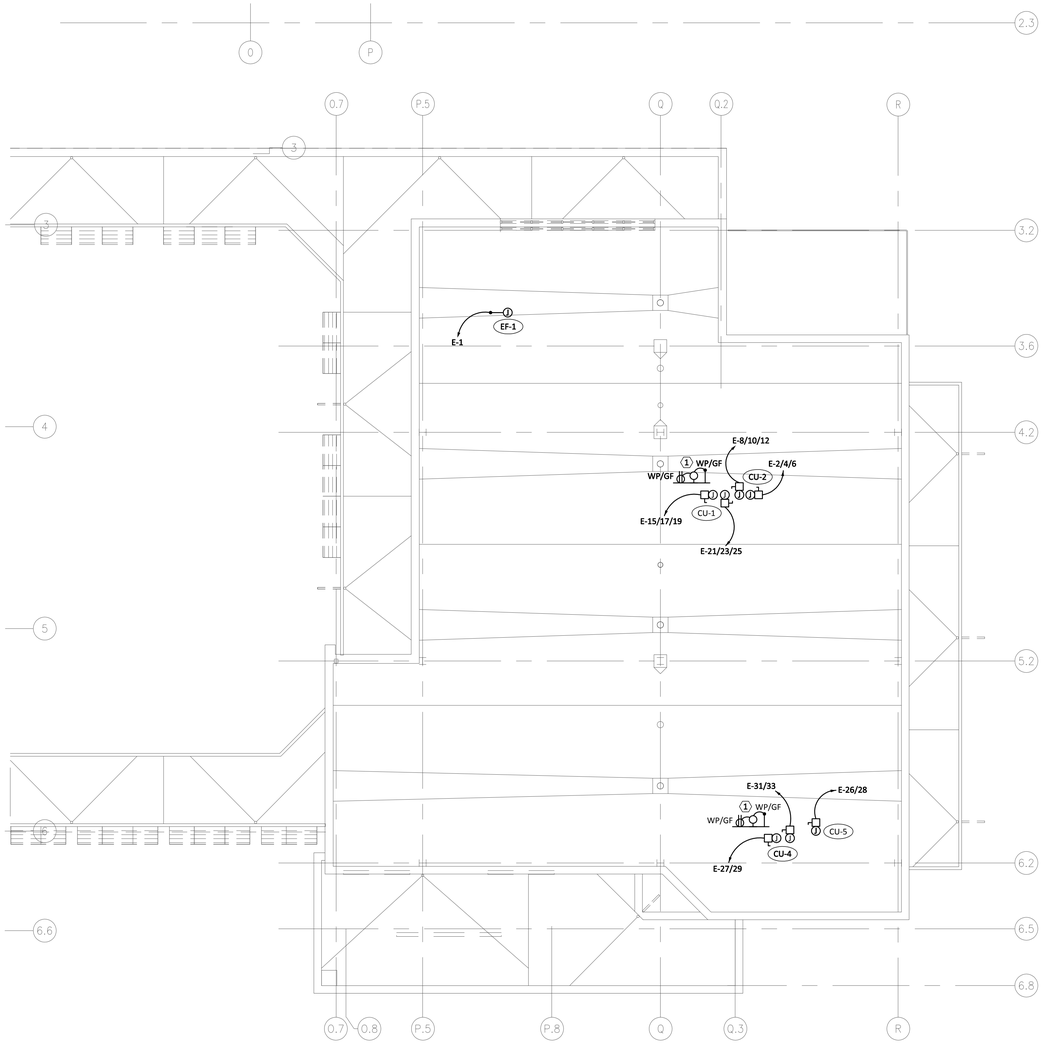

NORTH

ROOF ELECTRICAL PLAN

SCALE: 1/8"=1'-0"

DESIGNER/ENGINEER SH
CAD OPERATOR SH
QAQC/CHECKER BL

Revisions	Date
ISSUED FOR BID	02/28/2012
PRE-BID AMENDMENT, REV 1	04/26/2012
PRE-BID AMENDMENT	05/10/2012

Dynamix Engineering Ltd.
Facility Engineering Consultants
855 Grandview Avenue, Third Floor Columbus, Ohio 43215
Phone: (614)443-1178 · Fax: (614)443-1594 · Email: dynamix@dynamix-ltd.com
Comm. No.: 110028

STATE OF OHIO
MACE E-50556
MONTGOMERY E-66852
GRIFFIN E-57049
REGISTERED PROFESSIONAL ENGINEERS

Professional Seal

Revised By:

Drawing Title: ROOF ELECTRICAL PLAN	SCALE: 1/8"=1'-0"
Project Title: OPEN MRI SITE PREP	
Approved: Project Manager: RANDI FIORINA	
Approved: Service Chief: GARY ABREU	
Building Number: 335	Checked: DYNAMIX / Drawn: SH
Location: 4100 WEST THIRD STREET DAYTON, OH 45428	
Date: 02-28-2012	
Project No.: 552-CSI-101	
Drawing No.: E1-05	

VAMC, DAYTON

VA Department of Veterans Affairs

VA FORM 08-6231, OCT 1978

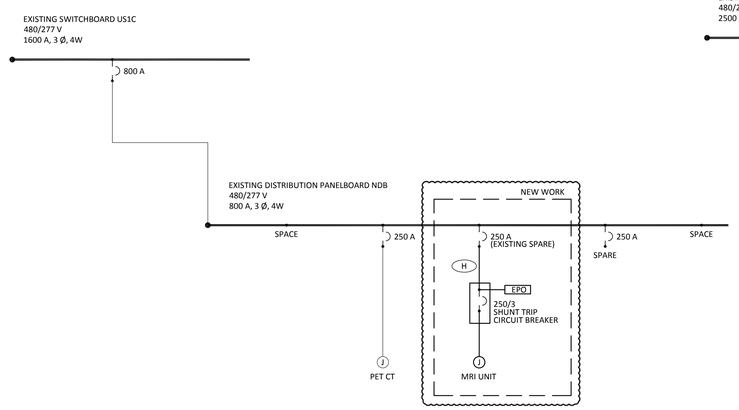

PARTIAL SINGLE LINE DIAGRAM - NORMAL BRANCH

SCALE: NONE

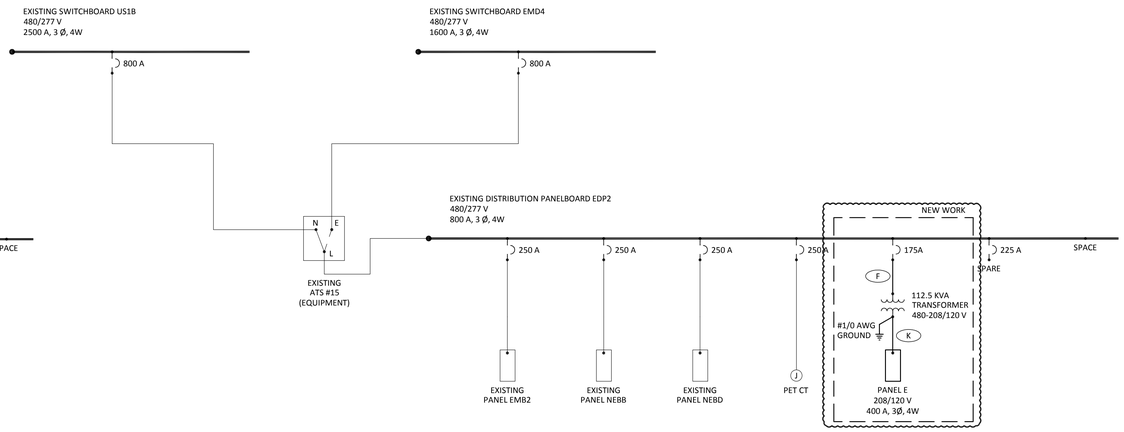

PARTIAL SINGLE LINE DIAGRAM - EQUIPMENT BRANCH

SCALE: NONE

FEEDER KEY

#	MAXIMUM AMPERAGE	NUMBER OF SETS	FEEDER: NUMBER OF CONDUCTORS	FEEDER: WIRE SIZE	FEEDER: GROUND SIZE	FEEDER: CONDUIT SIZE
A	30	1	3	10	10	.75"
B	60	1	3	1	10	.75"
C	100	1	3	1	8	1.5"
D	125	1	4	1/0	6	2"
E	150	1	4	1/0	6	2"
F	200	1	4	3/0	6	2"
G	225	1	4	4/0	4	2.5"
H	250	1	4	250	4	3"
I	300	1	4	350	3	3"
J	350	1	4	500	3	4"
K	400	1	4	600	3	4"
L	600	2	4	350	1	3"
M	800	2	4	600	1/0	4"
N	1000	3	4	400	2/0	3"
O	1200	3	4	600	3/0	4"
P	1600	4	4	600	4/0	4"
Q	2000	5	4	600	250	4"
R	2500	6	4	600	350	4"
S	4000	10	4	600	500	4"
T	5000	12	4	600	700	4"
U	-	-	-	-	-	-
V	-	-	-	-	-	-
W	-	-	-	-	-	-

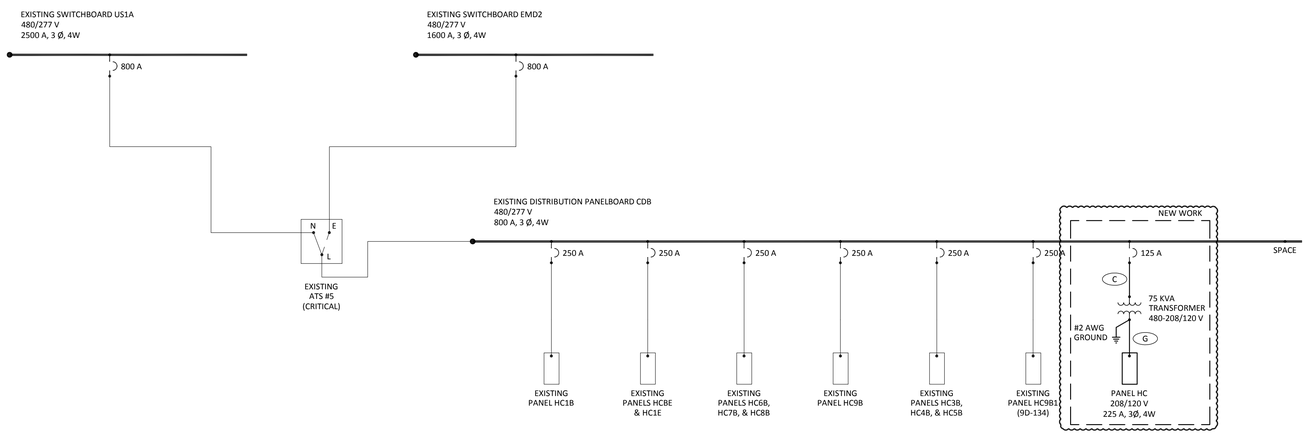

PARTIAL SINGLE LINE DIAGRAM - CRITICAL BRANCH

SCALE: NONE

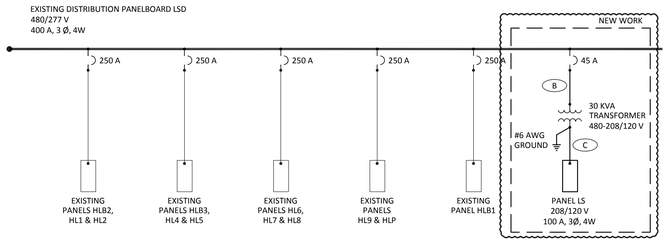

PARTIAL SINGLE LINE DIAGRAM - LIFE SAFETY BRANCH

SCALE: NONE

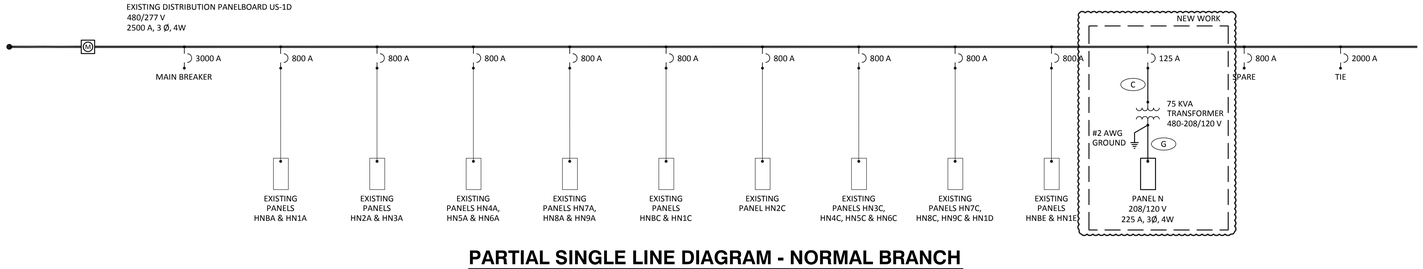

PARTIAL SINGLE LINE DIAGRAM - NORMAL BRANCH

SCALE: NONE

DESIGNER/ENGINEER JH
CAD OPERATOR JH
QAQC/CHECKER TS

Revisions	Date
ISSUED FOR BID	02/28/2012
PRE-BID AMENDMENT, REV 1	04/26/2012
PRE-BID AMENDMENT	05/10/2012

Dynamix Engineering Ltd.
Facility Engineering Consultants
855 Grandview Avenue, Third Floor Columbus, Ohio 43215
Phone: (614)443-1178 · Fax: (614)443-1594 · Email: dynamix@dynamix-ltd.com
Comm. No.: 110028

STATE OF OHIO
MACE E-50556
MONTGOMERY E-66852
GRIFFIN E-57049
REGISTERED PROFESSIONAL ENGINEERS
Professional Seal

Revised By:

Drawing Title	Project Title	Date
ELECTRICAL SINGLE LINE DIAGRAM SCALE: NONE	OPEN MRI SITE PREP	02-28-2012
Approved: Project Manager RANDI FIORINA	Building Number 335 · Checked DYNAMIX · Drawn JH	Project No. 552-CSI-101
Approved: Service Chief GARY ABREU	Location 4100 WEST THIRD STREET DAYTON, OH 45428	Drawing No. E3-00

VAMC, DAYTON
VA Department of Veterans Affairs

VA FORM 08-6231, OCT 1978