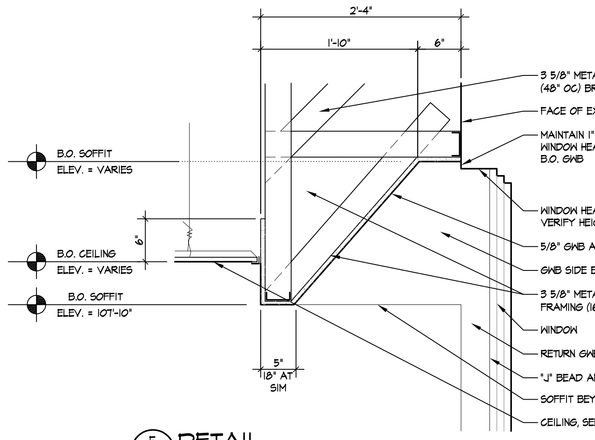


5 A2.3 DETAIL
SCALE: 1" = 1'-0"

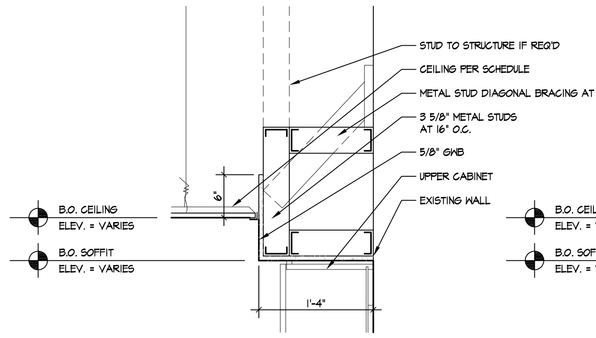


6 A2.3 DETAIL
SCALE: 1" = 1'-0"
TYPICAL AT CABINETS

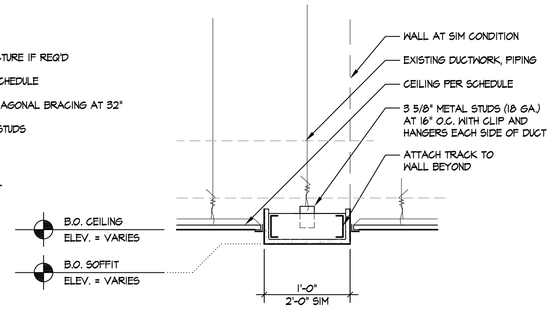


7 A2.3 DETAIL
SCALE: 1" = 1'-0"

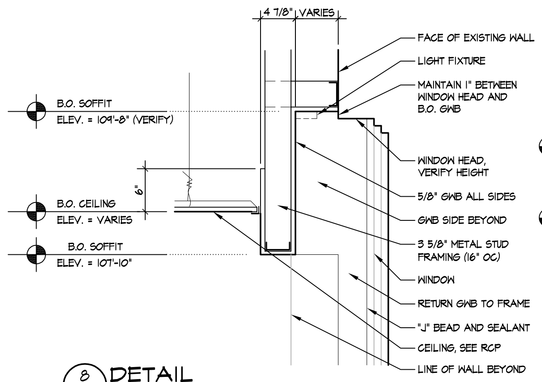


8 A2.3 DETAIL
SCALE: 1" = 1'-0"

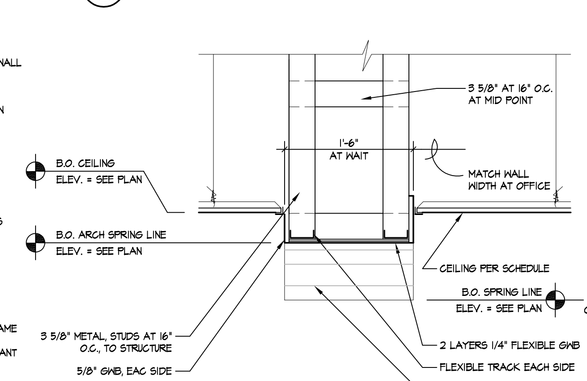


9 A2.3 DETAIL
SCALE: 1" = 1'-0"

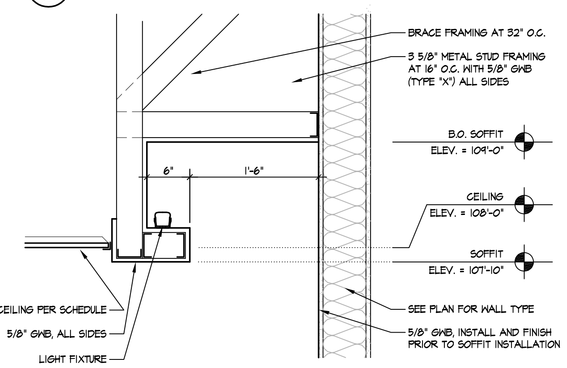


9A A2.3 DETAIL
SCALE: 1" = 1'-0"

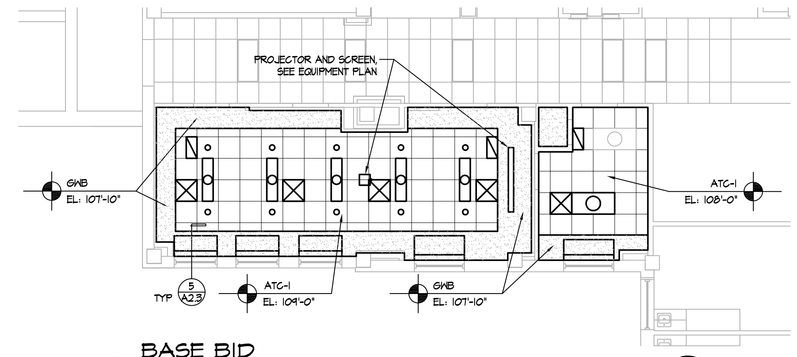


1 A2.3 BASE BID
REFLECTED CEILING PLAN - 1st FLOOR
SCALE: 1/8" = 1'-0"

PLAN NORTH

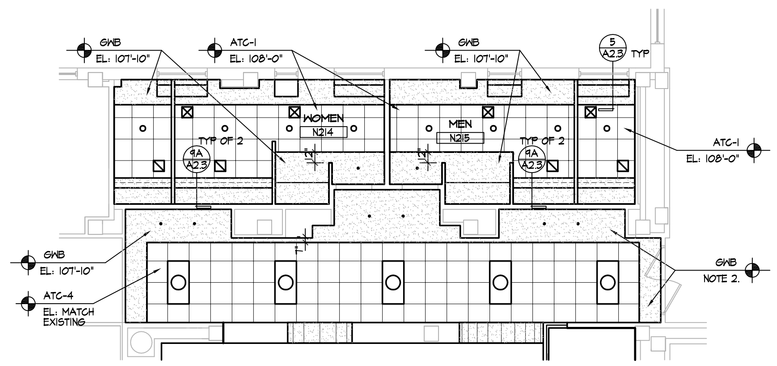


4 A2.4 ALTERNATE NO. 2
REFLECTED CEILING PLAN - 2nd FLOOR
SCALE: 1/8" = 1'-0"

PLAN NORTH

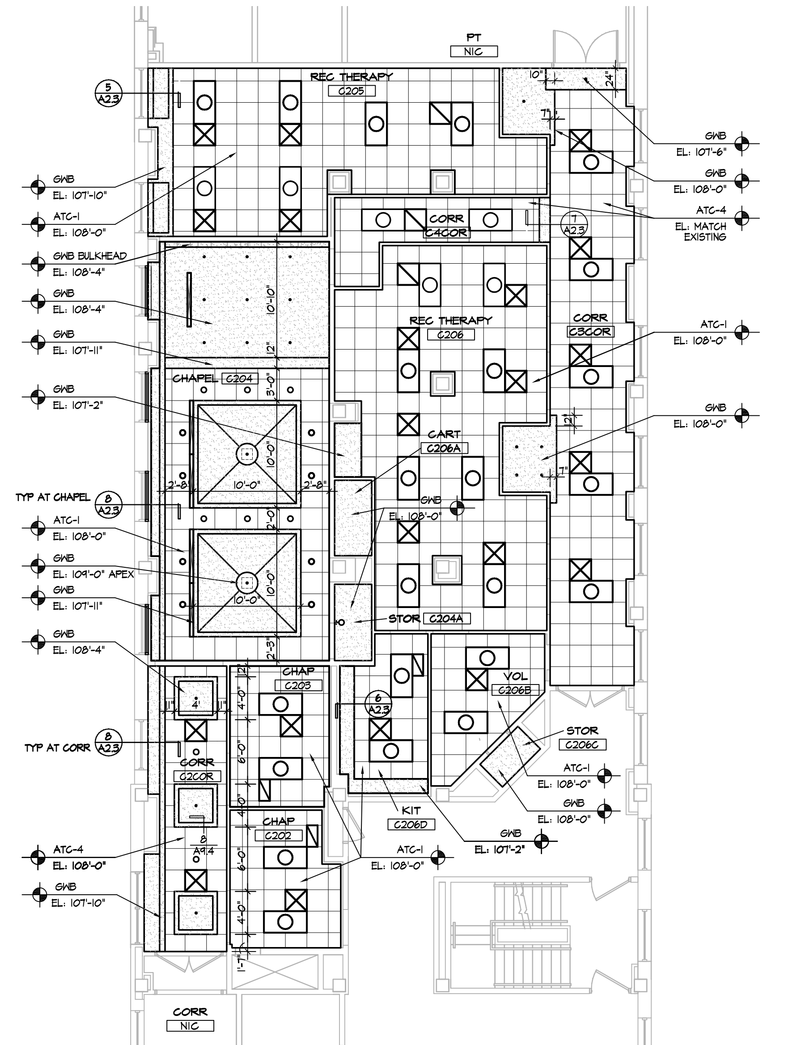


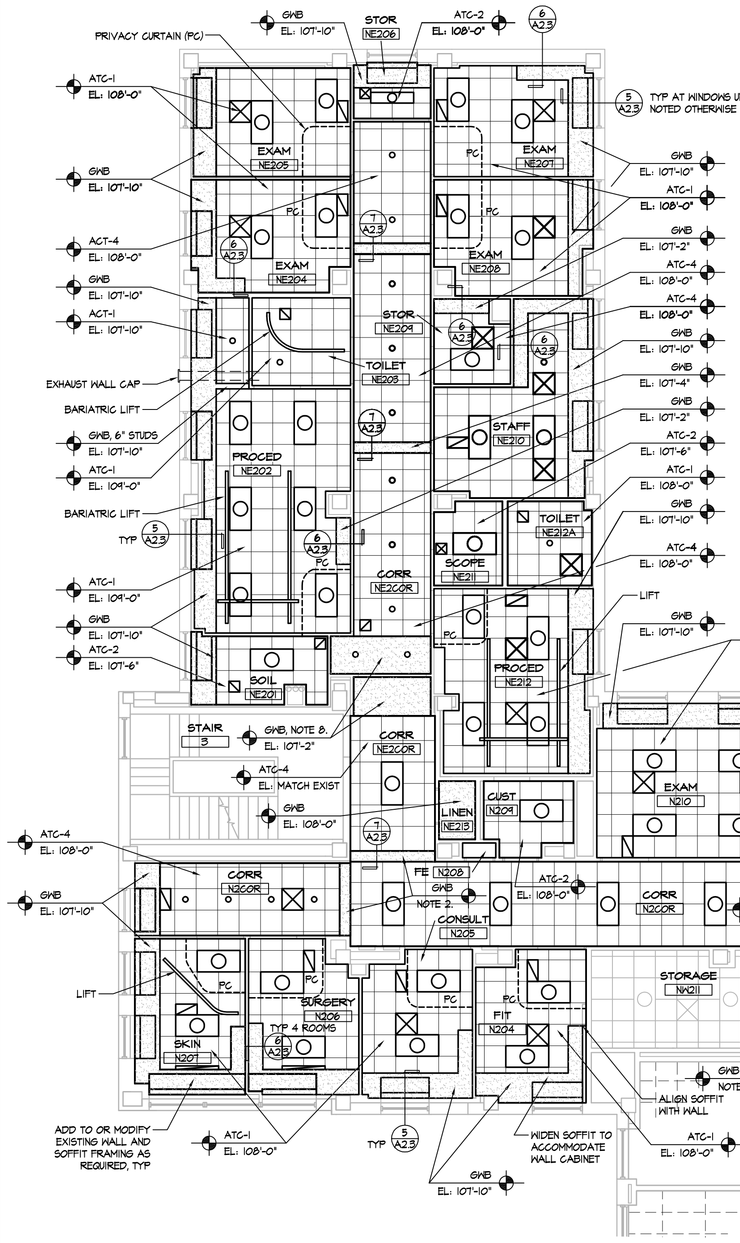


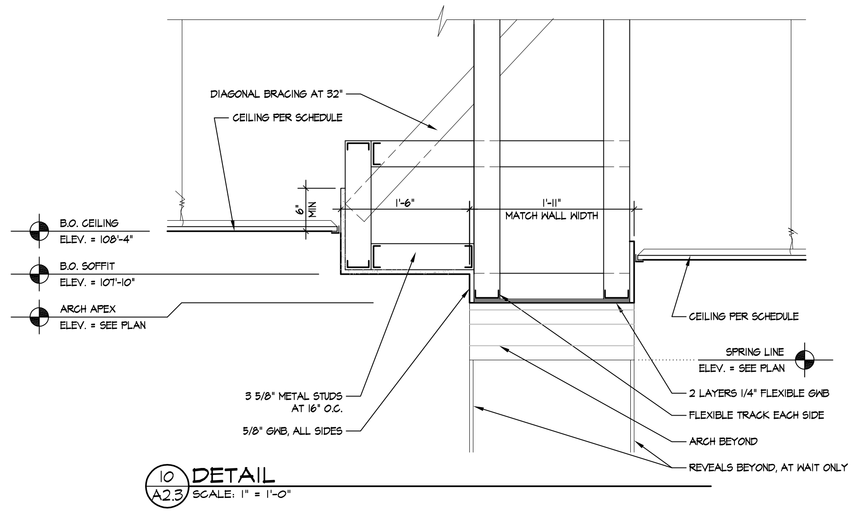


10 A2.3 DETAIL
SCALE: 1" = 1'-0"

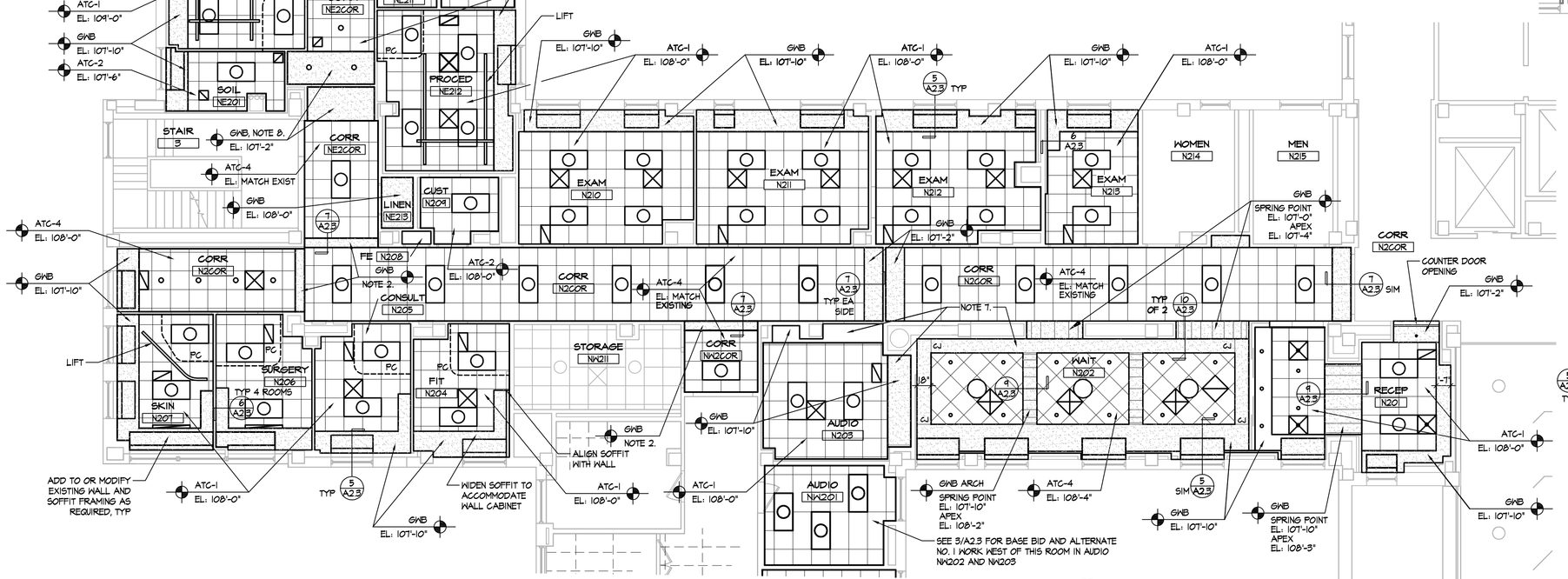


2 A2.3 BASE BID
REFLECTED CEILING PLAN - 2nd FLOOR
SCALE: 1/8" = 1'-0"

PLAN NORTH

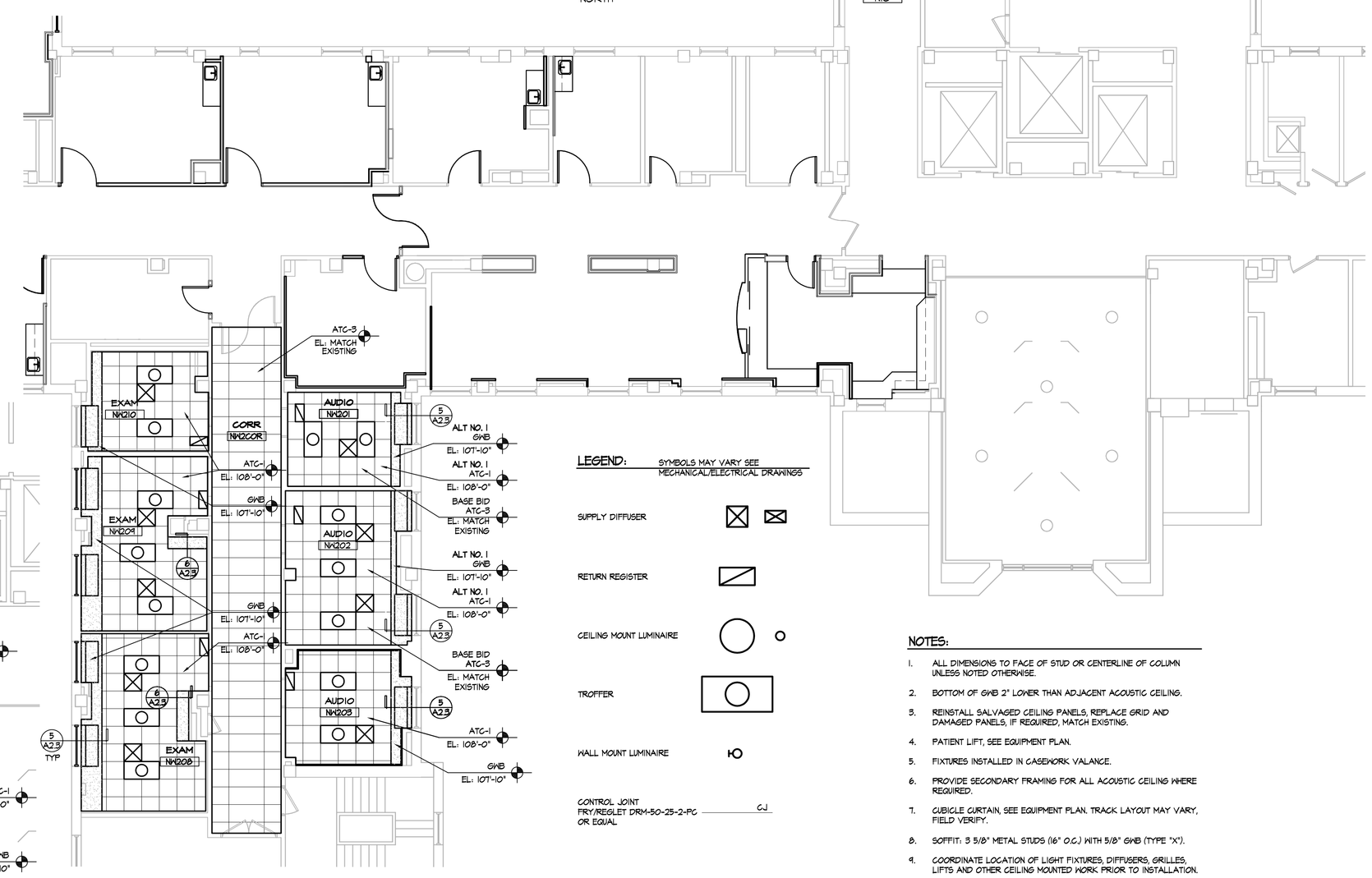


3 A2.3 ALTERNATE NO. 1
FLOOR PLAN - 2nd FLOOR
SCALE: 1/8" = 1'-0"

PLAN NORTH

LEGEND: SYMBOLS MAY VARY SEE MECHANICAL/ELECTRICAL DRAWINGS

SUPPLY DIFFUSER

RETURN REGISTER

CEILING MOUNT LUMINAIRE

TROFFER

WALL MOUNT LUMINAIRE

CONTROL JOINT FRY/REGLET DRM-50-25-2-PG OR EQUAL — CJ

## NOTES:

1. ALL DIMENSIONS TO FACE OF STUD OR CENTERLINE OF COLUMN UNLESS NOTED OTHERWISE.
2. BOTTOM OF GWB 2" LOWER THAN ADJACENT ACOUSTIC CEILING.
3. REINSTALL SALVAGED CEILING PANELS, REPLACE GRID AND DAMAGED PANELS, IF REQUIRED. MATCH EXISTING.
4. PATIENT LIFT, SEE EQUIPMENT PLAN.
5. FIXTURES INSTALLED IN CASEWORK VALANCE.
6. PROVIDE SECONDARY FRAMING FOR ALL ACOUSTIC CEILING WHERE REQUIRED.
7. CUBICLE CURTAIN, SEE EQUIPMENT PLAN. TRACK LAYOUT MAY VARY, FIELD VERIFY.
8. SOFFIT: 3 5/8" METAL STUDS (16" O.C.) WITH 5/8" GWB (TYPE "X").
9. COORDINATE LOCATION OF LIGHT FIXTURES, DIFFUSERS, GRILLES, LIFTS AND OTHER CEILING MOUNTED WORK PRIOR TO INSTALLATION.
10. UNLESS NOTED OTHERWISE PROVIDE 3 5/8" (16" O.C.) AND 5/8" GWB FOR ALL SOFFITS, BULKHEADS AND CEILINGS. PROVIDE METAL STUDS BRACING VERTICALLY EVERY 48" O.C.
11. INSTALL EXHAUST FAN AS CLOSE TO THE BOTTOM OF EXISTING SPANDREL BEAM AS POSSIBLE. COORDINATE CEILING ELEVATION AND ALL ABOVE CEILING ITEMS WITH EXHAUST FAN DUCT. PROVIDE CONTINUOUS SEALANT AT THE EXTERIOR PERIMTER OF WALL CAP AS REQUIRED. ADJUST CEILING ELEVATION IF REQUIRED.

| Revisions | Date |
|---|---|
| | |

© 2012 Calvin L. Hinz Architects P.C.

These plans are specifically designed for construction by Calvin L. Hinz Architects and are intended for no other purposes. Permission for use of this document in part or whole without written consent of Calvin L. Hinz Architects is prohibited.

IMPORTANT CONTRACTOR'S NOTE

1. ALL CONTRACTORS ARE RESPONSIBLE FOR REVIEWING ENTIRE SET OF DOCUMENTS TO DETERMINE THEIR FULL SCOPE OF WORK. CONTRACTOR SHALL NOT BE ALLOWED EXTRA COSTS DUE TO FAILURE TO REVIEW ENTIRE SET OF DOCUMENTS.
2. ANY USE OF THESE ELECTRONIC DRAWINGS OR SCALING OF THE PRINTED DOCUMENTS ARE DONE SO AT THE CONTRACTORS RISK.

REGISTERED PROFESSIONAL ARCHITECT CALVIN L. HINZ A-1793 STATE OF NEBRASKA

ARCHITECT/ENGINEERS:

CLH Calvin L. Hinz Architects, Inc.

Calvin L. Hinz Architects, P.C.
3705 North 200th Street
Elkhorn, Nebraska 68022
Phone:402.291.6941 Fax: 402.291.9193

KRS ENGINEERING
11620 ARBOR STREET SUITE 100
OMAHA, NEBRASKA 68144
PHONE : 402 . 932 . 0100
FAX: 402 . 932 . 1001
www.krsengineering.com
KRS #

COPYRIGHT 2011
This document and the information contained may not be reproduced without the express written permission of KRS Engineering, LLC. Unauthorized copying, disclosure or construction use are prohibited by the copyright law.

Drawing Title: 1st AND 2nd FLOOR REFLECTED CEILING PLANS

Project Title: RENOVATE BACKFILL CANTEEN SPACE NWIHCS

Location: VAMC Grand Island, NE

Project Number: 636-12-103

Building Number: ONE

Drawing Number: A2.3

Approved Project Director: KEVIN HUTSELL

CONSTRUCTION DOCUMENT (CD-3) SUBMITTAL (100%)
April 13, 2012

Date: APRIL 13, 2012 | Checked: CH | Drawn:

Dwg. 4 of 40

Office of Construction and Facilities Management

Department of Veterans Affairs

VA FORM 08-6231

D:\Projects - Active\2012-02 VA GI Specialty Clinic- Canteen Backfill\208\12-02 A2.3.dwg 4-25-12 08:07:10 AM mkeurney